CONSTRUCTION DRAWINGS
FOR
DOWNTOWN CHILLED WATER MAINS
AND FIBER OPTIC METERING CONDUITS

PREPARED FOR:

Building Community®

OCTOBER 2020
JEA PROJECT NO.: 8006299
MM PROJECT NO.: 502100442-001
ISSUED FOR BID

CITY OF JACKSONVILLE NOTES

GENERAL

All construction shall be performed in accordance with the approved plans and comply with all standard city policies and practices. City approval is contingent upon any required state or federal permit approvals such as those from the Department of Environmental Protection or the St. Johns River Water Management District (SJRWMD).

UTILITY WORK

Plan approval through Development Services does not include utilities. Proposed water, sewer or electric construction must be approved separately through the respective utility company. In most cases, this will be:

JEA
JEA Tower - 4th Floor
21 W. Church Street
Jacksonville, FL 32202
http://www.jea.com/business/services/devandbuild/developers.asp

WORK WITHIN THE RIGHT-OF-WAY

CITY: Except for new subdivision infrastructure construction, all work performed within a City of Jacksonville right-of-way or easement requires a Right-of-way Permit. The contractor performing the proposed work must have a current Right-of-way Bond on file with Development Services. Right-of-way Permit applications are processed at:

Development Services Customer Service Counter
Edward Ball Building, 2nd Floor
214 N. Hogan St.
Jacksonville, FL 32202
(904) 255-8572
http://row.jaxdev.info/

STATE: All work performed within a state right-of-way requires a permit from the Florida Department of Transportation (FDOT). It is the developer's responsibility to obtain required FDOT permits or maintenance-of-traffic approvals for work within FDOT right-of-ways. The FDOT regional office can be contacted at (904) 825-5036. Any changes to the approved plans needed for FDOT approval must be submitted to Development Services as revisions. JEA & FDOT inspector must be on site to verify valve placement, location, & grade. (Valves to be located outside of ditch line as to not impede future maintenance of said ditches.)

Adjacent State Roads: _____

RAILROAD: Railroad companies may require special approvals or permits to work within their right-of-ways. It is the developer's responsibility to obtain permission from any railroad right-of-way owner before performing any work within their right-of-way.

STORMWATER

Annual reports in compliance with the SJRWMD stormwater permits are required from the maintenance entity of all stormwater management facilities. Send copies of the reports to:

Engineering and Construction Management
Edward Ball Building, 10th Floor
214 N. Hogan St.
Jacksonville, FL 32202
http://www.coj.net/Departments/Public+Works/Engineering+and+Construction+Management/

The owner of any project one (1) acre or larger is required to provide a Notice of Intent (NOI) in accordance with criteria set forth in the city's NPDES permit within 48 hours of beginning construction. Send NOI and NOI fee to:

Florida Department of Environmental Protection
NPDES Stormwater Notices Center, Mail Station #2510
2600 Blair Stone Road
Tallahassee, Florida 32399-2400
(866) 336-6312
http://www.dep.state.fl.us/water/stormwater/npdes/

The contractor shall contact the Environmental Quality Division, Erosion and Sedimentation Control Section (ESC) to provide verification that applicable stormwater permits have been obtained and to schedule a pre-construction ESC site inspection:

Environmental Quality Division
407 North Laura Street, Third Floor
Jacksonville, FL, 32202
(904) 255-7222

FIRE MARSHALL

Plan review and approval does not relieve the contractor of complying with all applicable State Fire Codes.

Underground mains and hydrants shall be installed, completed, and in service prior to construction work.

Underground contractor shall submit to the Fire Marshall for approval complete specs for all underground pipe and fittings relating to fire protection PRIOR to installation and inspection. Contractor shall include manufacturer's name and pipe ID along with contractor's state license number.

LANDSCAPE

A Site Work Permit is required for this project.

☐ Tree Fund payment is due: _____ inches at $_____ = $_____

☐ Article 25 funds are due: _____ inches at $_____ = $_____

TRAFFIC ENGINEERING

TRAFFIC SIGNS

Metro Name (each) _____

Standard (each) _____

Stop/Yield (each) _____

Design (per plat) 1 per plat

Installation (per hour) 1 per 2 signs (rounded up)

_____ Streetlights Required

NOTE: Traffic sign costs change from time to time. Consult Attachment 8 of the Land Development Procedures Manual (http://ldpm.jaxdev.com/) for the current rates before paying for any sign installations.

No lane closures allowed from 7 a.m. till 9 a.m. and from 4 p.m. till 7 p.m.

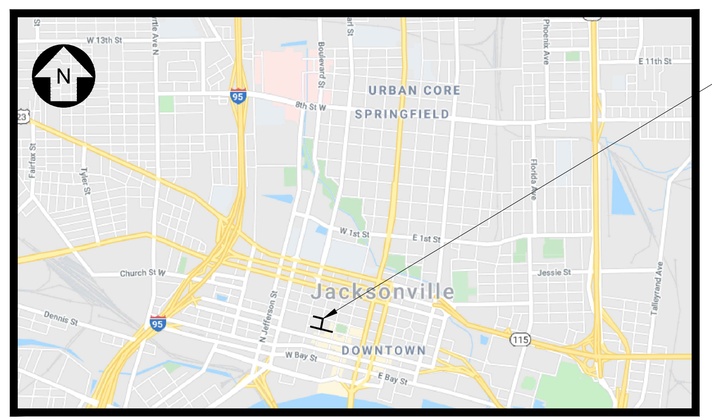

PROJECT LOCATION

LOCATION MAP
SCALE: NTS

MOTT MACDONALD
Mott MacDonald Florida, LLC

Architects Engineers Surveyors
AA - C0000035 EB - 0000155 LB - 0006783
10245 Centurion Pkwy. N., Suite 320
Jacksonville, Florida 32256
Telephone: (904) 203-1090

PLAN APPROVAL

_____ Date _____ Development Services Division (Chief)

_____ Date _____ Review Group (Reviewer)

Plan approval is valid for five years after the initial approval date. Revisions made after the initial approval date do not extend this five-year time frame.

PLAN APPROVAL IS SUBJECT TO THE FOLLOWING NOTES AND CONDITIONS:

GENERAL PROJECT INFORMATION

GENERAL	
City Development Number	4161.326
Concurrency Application Number	N/A
Property Appraiser Number (RE #)	-
Zoning Designation	-
Zoning Application(s) (if any)	-
PUD Ordinance Number	-
FIRM – Community – Panel	-
Flood Zones (Show in Plans)	
Base Flood Elev. (Show in Plans)	NAVD 1988
Vertical Datum Used for Project	
JEA Availability Number	
SUBDIVISION	N/A
PSD Number	N/A
City or Private Inspection	N/A
Public or Private Roads	N/A
Subdivision ("911") Disk Provided?	
NON-SUBDIVISION	
North American Industry Classification System (NAICS)	238220
Impervious Area (Sq. Ft.)	

NOT APPLICABLE | APPLICABLE

SURVEY AND LOCATE DATA:

☐ ☒ 1. ALL ELEVATIONS ARE BASED ON NAVD 88 DATUM AND SHOWN IN FEET.

☒ ☐ 2. ELEVATIONS ARE BASED ON N.G.V.D. 1929.

☐ ☒ 3. LOCATION OF EXISTING UTILITIES OBTAINED BY SOFT DIG LOCATES WHERE SHOWN ON PLANS, OR INCLUDED WITH BID SPECS.

☐ ☒ 4. EXISTING WATER AND SEWER LINES ARE SHOWN AS PER FIELD LOCATES OR SUPPLEMENTED WITH AS-BUILT PLANS.

☐ ☒ 5. UNDERGROUND UTILITIES WERE LOCATED UTILIZING GROUND PENETRATING RADAR (GPR) AND A DIGITAL LOCATOR. CONTRACTOR SHALL BE AWARE THAT IN SOME CASES UTILITIES HAVE BEEN LOCATED, AND SURVEY HAS BEEN COMPLETED ONLY ON ONE SIDE OF THE ROAD.

☐ ☒ 6. ALL PIPE LENGTHS SHOWN ON PLAN AND PROFILES ARE FROM CENTER TO CENTER OF MANHOLES, CATCH BASINS, INLETS ETC. OR ALONG THE CENTER LINE OF FORCE MAINS AND WATER MAINS.

☒ ☐ 7. INVERT ELEVATIONS SHOWN ON DRAWINGS REFER TO THE NORTH RIM OF MANHOLES, UNLESS OTHERWISE INDICATED.

☒ ☐ 8. THE LOCATION OF ALL EXISTING SEWER AND WATER SERVICE LINES MAY NOT BE INDICATED ON THESE PLANS. THE LOCATION OF NEW SERVICES SHALL BE VERIFIED IN THE FIELD.

☐ ☒ 9. BENCHMARK DATA: NAVD 88 SEE SURVEYORS NOTES

PERMIT REQUIREMENTS (NOT ALL INCLUSIVE):

☐ ☒ 1. CONTRACTOR TO OBTAIN ALL REQUIRED RIGHT-OF-WAY PERMITS.

☐ ☒ 2. CONTRACTOR SHALL NOT OPEN CUT STREETS IN THE PROJECT AREA UNLESS SPECIFICALLY SHOWN ON PLANS

☐ ☒ 3. THE CONTRACTOR IS RESPONSIBLE FOR OBTAINING A CONSUMPTIVE USE PERMIT (C.U.P.) THROUGH THE ST. JOHNS WATER MANAGEMENT DISTRICT SHOULD DEWATERING ACTIVITIES BE REQUIRED.

☐ ☒ 4. THE C.O.J. IS TO BE NOTIFIED IN ADVANCE OF CONSTRUCTION PER THEIR RESPECTIVE PERMIT CONDITIONS

☐ ☒ 5. ALL WORK SHALL BE IN ACCORDANCE WITH BID DOCUMENTS, JEA WATER AND SEWER STANDARDS, DETAILS AND MATERIALS MANUAL, LATEST EDITION, AND CITY OF JACKSONVILLE STANDARD SPECIFICATIONS AND DETAILS, AND ALL APPLICABLE STATE, LOCAL, AND FEC REGULATIONS.

☒ ☐ 6. IF SOLVENT CONTAMINATION IS FOUND IN THE PIPE TRENCH, WORK SHALL BE STOPPED AND THE PROPER AUTHORITIES NOTIFIED. WITH APPROVAL OF THE PERMITTING AGENCY, DUCTILE IRON PIPE, FITTINGS AND SOLVENT RESISTANT GASKET MATERIAL SHALL BE USED IN THE CONTAMINATED AREA. THE DUCTILE IRON PIPE SHALL EXTEND AT LEAST 100 FEET BEYOND ANY SOLVENT NOTED.

☐ ☒ 7. THE CONTRACTOR SHALL NOTIFY APPLICABLE UTILITY CONTACT PERSONNEL NOT LESS THAN ONE WEEK PRIOR TO CONSTRUCTION OF FACILITIES IN THEIR RESPECTIVE AREAS.

☐ ☒ 8. TREE PROTECTION SHALL BE IN ACCORDANCE WITH JACKSONVILLE ORDINANCE CODE 656 AND/OR AS DETAILED ON SPECIFIC PLAN SHEETS. NO TRIMMING OF OVERHANGING TREE LIMBS WILL BE ALLOWED. USE SMALLER EQUIPMENT IF NECESSARY.

☐ ☒ 9. THE CONTRACTOR SHALL LOCATE THE DRAINAGE INLET STRUCTURES IN THE PROJECT AREA AND ERECT SEDIMENTATION CONTROL DEVICES AS NECESSARY PER THE CITY OF JACKSONVILLE STORMWATER POLLUTION PREVENTION PLAN.

☐ ☒ 10. CONTRACTOR TO COORDINATE WORK WITH OTHER UTILITIES DURING CONSTRUCTION.

EXISTING UTILITY PROTECTION:

1. IN ORDER TO REDUCE THE DISRUPTION AND COST OF UTILITY DAMAGES OCCURRING IN THE COJ RIGHT-OF-WAY AND EASEMENTS, THE CONTRACTOR SHALL PREVENT DAMAGES TO EXISTING UTILITIES CAUSED BY HIS WORK THROUGH FIELD VERIFICATION OF THE LOCATION OF THE EXISTING UTILITIES. IN THE CASE OF OPEN EXCAVATION, VERIFICATION MAY BE PERFORMED DURING THE CONTRACTORS WORK.
2. THE CONTRACTOR SHALL VERIFY THE LOCATION OF EXISTING UTILITIES AS NEEDED TO AVOID CONTACT. EXISTING UTILITIES SHALL BE EXPOSED USING DETECTION EQUIPMENT OR OTHER ACCEPTABLE MEANS. SUCH METHODS MAY INCLUDE BUT SHALL NOT BE LIMITED TO "SOFT DIG" EQUIPMENT AND GROUND PENETRATING RADAR (GPR). THE EXCAVATOR SHALL BE HELD LIABLE FOR DAMAGES CAUSED TO THE CITY'S/JEA'S INFRASTRUCTURE AND THE EXISTING FACILITIES OF OTHER UTILITY COMPANIES.
3. IT SHALL BE THE SOLE RESPONSIBILITY OF THE CONTRACTOR TO LOCATE AND AVOID ALL UTILITIES, OTHER STRUCTURES AND OBSTRUCTIONS BOTH ABOVE AND BELOW GROUND SURFACE. ALL DAMAGE RESULTING FROM THE CONTRACTOR'S FAILURE TO COMPLY WITH THIS REQUIREMENT SHALL BE REPAIRED AT THE CONTRACTOR'S EXPENSE.

PROTECTION OF HISTORICAL ARTIFACTS:

1. DURING THE CONSTRUCTION PROCESS THE CONTRACTOR SHALL MONITOR EARTH SPOILS FOR SIGNS OF PREHISTORIC ARTIFACTS, SUCH AS POTTERY, CERAMICS, PROJECTILE POINTS, DUGOUT CANOES, METAL IMPLEMENTS, HISTORY BUILDING MATERIALS OR ANYTHING OF HISTORICAL NATURE.
2. IF ENCOUNTERED, THE PROJECT SHALL CEASE ALL ACTIVITIES AND NOTIFY THE OWNER, ENGINEER, AND FLORIDA DEPARTMENT OF STATE, DIVISION OF HISTORICAL RESOURCES, COMPLIANCE REVIEW SECTION AT (850) 245-6333. PROJECT SHALL NOT RESUME WITHOUT AUTHORIZATION.
3. IN THE EVENT THAT HUMAN REMAINS ARE DISCOVERED DURING PERMITTED ACTIVITIES, THE PROJECT SHALL CEASE ALL ACTIVITIES AND THE PROPER AUTHORITIES SHALL BE NOTIFIED IN ACCORDANCE WITH F.A.S. 872.05.

RESTORATION NOTES:

1. THE CONTRACTOR SHALL EMPLOY A LAND SURVEYOR, REGISTERED IN THE STATE OF FLORIDA, TO REFERENCE AND RESTORE PROPERTY CORNERS AND LANDMARKS WHICH MAY BE DISTURBED BY CONSTRUCTION, KNOWN CORNER LOCATIONS ARE AVAILABLE FROM THE CITY OF JACKSONVILLE ENGINEERING DIVISIONS.
2. THE CONTRACTOR SHALL RESTORE/REPLACE ALL CULVERTS, HEADWALLS AND STORM DRAIN INLETS REMOVED OR DISTURBED BY THE CONSTRUCTION OPERATION.
3. TRAFFIC SIGNS AND PAVEMENT MARKINGS SHALL BE RESTORED TO THEIR PRE-CONSTRUCTION CONDITION IN ACCORDANCE WITH FDOT AND CITY OF JACKSONVILLE STANDARD SPECIFICATIONS.
4. SIDEWALKS, DRIVEWAYS AND CURBING DAMAGED OR REMOVED DURING CONSTRUCTION SHALL BE REPLACED IN ACCORDANCE WITH CITY OF JACKSONVILLE STANDARD SPECIFICATIONS AS REQUIRED. SIDEWALKS REMOVED AND REPLACED IN CURB AND GUTTER AREAS AT INTERSECTIONS SHALL HAVE HANDICAP RAMPS INSTALLED. DRIVEWAYS AND SIDEWALKS SHALL BE SAWCUT ALONG THE RIGHT-OF-WAY LINE OR NEAREST JOINT AND REMOVED AND REPLACED TO THE EDGE OF STREET.
5. GRASS SOD SHALL BE FURNISHED AND PLACED IN THE AREAS DISTURBED OR DAMAGED BY THE CONSTRUCTION OPERATION.
6. ALL PAVEMENT REPAIR SHALL BE IN ACCORDANCE WITH THE CITY OF JACKSONVILLE STANDARD DETAILS AND SPECIFICATIONS, LATEST EDITION.
7. UNLESS OTHERWISE NOTED, REMOVE AND REPLACE EXISTING COJ PAVEMENT AS PER C.O.J. CASE X (10) PAVEMENT REPLACEMENT DETAIL.
8. CONTRACTOR MUST MAINTAIN AND PRESERVE NEWLY GRADED AREAS AND REPAIR AREAS WHERE SETTLING AND EROSION HAVE OCCURRED.

UTILITY CONTACTS:

A. AT&T ~ GENERAL NUMBER _ _ _ 904-519-2529
B. AT&T ~ ADAM DUGAN ~ NORTH DISTRICT _ _ _ 904-781-0741
C. AT&T ~ BILL LAKE ~ SOUTH DISTRICT _ _ _ 904-303-8754
D. CITY OF JACKSONVILLE ~ PUBLIC WORKS DEPT. _ _ _ 904-255-8762
E. CITY OF JACKSONVILLE ~ TRAFFIC ENGINEERING _ _ _ 904-255-7533
F. FLORIDA DEPT. OF TRANSPORTATION _ _ _ 904-825-5036
G. JEA ~ WATER COLLECTION & DISTRIBUTION ~ RANDY ELLIS _ _ _ 904-665-7133
H. JEA ~ SEWER COLLECTION & DISTRIBUTION ~ NATHANIAL ROUSE _ _ _ 904-665-8183
I. JEA ~ GENERAL INFORMATION _ _ _ 904-665-6000
J. JEA ~ PROJECT OUTREACH _ _ _ 904-665-7500
K. JEA ~ POWER OUTAGES _ _ _ 904-665-6000
L. JEA ~ SEWER PROBLEMS _ _ _ 904-665-4802
M. JEA ~ WATER PROBLEMS _ _ _ 904-665-4801
N. JEA ~ WATER & SEWER LOCATES _ _ _ 904-665-8410
O. COMCAST ~ EMERGENCY HOTLINE _ _ _ 904-380-6274
P. JACKSONVILLE TRANSIT AUTHORITY (JTA) ~ IVAN MITCHELL _ _ _ 904-633-8523
Q. TECO/PEOPLES GAS ~ BEN MOBLEY _ _ _ 904-545-8958
R. SUNSHINE ONE CALL _ _ _ 811
S. FDOT - ITS - FOC ~ JOSH REICHERT _ _ _ 904-360-5642
T. JEA ENVIRONMENTAL GROUP _ _ _ 904 665-4517
U. COJ TRAFFIC MOT ~ RONNIE THIGPEN _ _ _ 904-255-8704
V. COJ TRAFFIC SIGNALS ~ MIGUEL CAMACHO _ _ _ 904-255-7549
W. FLORIDA GAS TRANSMISSION ~ JACOB WALLACE _ _ _ 325-494-0028
X. FLORIDA POWER AND LIGHT ~ ROB HELFER _ _ _ 904-824-7617
Y. ST JOHNS COUNTY ~ RIGHT-OF-WAY PERMITTING ~ RICK MAULDIN _ _ _ 904-209-0134
Z. ST JOHNS COUNTY ~ TRAFFIC SIGNALS ~ HANK MEIN _ _ _ 904-209-0173
AA. FEC RAILROAD ~ EMERGENCY HOTLINE _ _ _ 904-538-6100

NOT APPLICABLE | APPLICABLE

INSTALLATION NOTES:

☒ ☐ 1. CONTRACTOR TO REHABILITATE ALL MANHOLES ON PIPE BURST SEWERS VIA COATING/LINING PER JEA SPECIFICATION 446-2, UNLESS OTHERWISE NOTED ON THE PLANS.

☒ ☐ 2. CONTRACTOR TO RENEW, REHABILITATE, REPLACE OR REINSTALL AS APPLICABLE ALL SERVICE LATERALS TO R.O.W. LINE.

☒ ☐ 3. CONTRACTOR TO INSTALL SEWER SERVICE PIPING A MINIMUM OF 60 INCHES BELOW GRADE. WHERE NEW SANITARY SEWER MAIN IS LESS THAN 5 FEET DEEP, THE SEWER SERVICE PIPE SHALL BE INSTALLED AS DEEP AS POSSIBLE.

☐ ☒ 4. WHEN THE DISTANCE BETWEEN A POWER POLE AND THE TRENCH IS LESS THAN THE TRENCH DEPTH, THE CONTRACTOR SHALL BE RESPONSIBLE FOR COORDINATING WITH JEA ELECTRICAL PERSONNEL TO SECURE POWER POLES. THE CONTACTS FOR JEA ARE AS FOLLOWS:
NORTHSIDE~EAST of US-1 MIKE CORBITT @ 665-7991 (mobile 662-0635)
NORTHSIDE~WEST of US-1 ANDY YEAGER @ 665-7998 (mobile 662-0622)
NORTHSIDE~BACKUP ALAN AINSLEY @ 665-7303 (mobile 662-6557)
SOUTHSIDE~SOUTH of BEACH BLVD. TOM KERNS @ 665-6847 (mobile 860-1687)
SOUTHSIDE~NORTH of BEACH BLVD. DERYL BASFORD @ 665-6855 (mobile 662-0616)
SOUTHSIDE~BACKUP EDDIE GALES @ 665-6855 (mobile 662-0616)
A MINIMUM OF TWO (2) WORKING DAYS NOTICE IS REQUIRED FOR AN OUTSIDE MEETING WITH JEA ELECTRICAL TO DISCUSS THE REQUIRED WORK. ADDITIONAL TIME WILL BE REQUIRED BY JEA ELECTRICAL FOR ANY REQUIRED WORK TO BE ACCOMPLISHED.

☐ ☒ 5. ALL NEW STORM DRAIN PIPE JOINTS SHALL BE WRAPPED WITH FILTER FABRIC.

☐ ☒ 6. THE DESIGN FOR THE PROJECT IS BASED UPON THE "OPEN-CUT" METHOD OF CONSTRUCTION. IF USING ALTERNATIVE MEANS OR METHODS, THE CONTRACTOR SHALL FOLLOW ALL APPLICABLE STANDARDS FOR THAT MEANS OR METHOD.

☐ ☒ 7. THE CONTRACTOR SHALL MINIMIZE SERVICE INTERRUPTIONS AT SERVICE CONNECTIONS. THE MEANS AND METHODS SHALL BE LEFT TO THE DISCRETION OF THE CONTRACTOR, SUBJECT TO THE REQUIREMENTS OF THE CONTRACT SPECIFICATIONS. NO EXISTING ACTIVE SERVICE SHALL BE LEFT INTERRUPTED AT THE END OF THE WORK DAY.

☐ ☒ 8. CONTRACTOR SHALL PROVIDE ADDITIONAL CORPORATION STOPS FOR FILLING AND DRAINING PURPOSES DURING CONSTRUCTION AS NEEDED. CORPORATION STOPS ARE TO BE PLUGGED AND LEFT IN PLACE. INDICATE CORPORATION STOP LOCATIONS ON RECORD DRAWINGS (AS-BUILTS).

☒ ☐ 9. WATER AND SEWER SERVICES SHALL BE TRANSFERRED TO THE NEW MAIN UPON COMPLETION AND F.D.E.P./J.E.A. CERTIFICATION, AND PRIOR TO THE EXISTING MAINS BEING ABANDONED.

☒ ☐ 10. IF EXISTING VALVES ARE IN UNPAVED AREAS AND ARE TO BE TAKEN OUT OF SERVICE, THEY SHALL BE CLOSED AND THE VALVE BOX AND COVER SHALL BE REMOVED. IF THE VALVES ARE UNDER PAVED AREAS, THEY SHALL BE CLOSED, THE VALVE BOX GROUT FILLED AND THE COVER REMOVED.

☒ ☐ 11. CONTRACTOR SHALL REPLACE EXISTING WATER METER BOXES WHEN DEEMED NECESSARY BY THE JEA INSPECTOR.

☐ ☒ 12. CONTRACTOR TO PROVIDE ADDITIONAL DEPTH OF BURY VIA PIPE JOINT DEFLECTION TO ACCOMMODATE VALVE SELECTION PER JEA STANDARDS.

☒ ☐ 13. WATER METERS MAY REQUIRE RELOCATION FOR CONSTRUCTION, CONTRACTOR SHALL CONTACT JEA METER DEPARTMENT AND RELOCATE WATER METERS AS NECESSARY.

☒ ☐ 14. PRIOR TO COMMENCING ANY EXCAVATION OR GRADING, THE CONTRACTOR SHALL OBTAIN ALL GEOTECHNICAL AND TOPOGRAPHIC SURVEY DATA AND LOCATIONS OF ABOVE GROUND AND UNDERGROUND UTILITIES. SHOULD THE CONTRACTOR DISCOVER ANY INACCURACIES, ERRORS OR OMISSIONS IN THE SURVEY DATA, HE SHALL IMMEDIATELY NOTIFY THE DESIGN ENGINEER IN ORDER THAT PROPER ADJUSTMENTS CAN BE ANTICIPATED AND ORDERED.

☐ ☒ 15. SHEET PILING WILL BE REQUIRED ON ALL EXCAVATIONS DEEPER THAN 16 FEET.

INDEX OF DRAWINGS:

SHEET NO.	DWG NO.	INDEX NAME
		COVER
1	G-1	JEA GENERAL NOTES AND SHEET INDEX
2	G-2	ABBREVIATIONS, GENERAL LEGEND & SYMBOLS
3	G-3	PROJECT SCOPE AND LAYOUT
4	G-4	SHEET KEY PLAN
5	C-1	DOWNTOWN CHILLED WATER MAINS - W. DUVAL ST.
6	C-2	DOWNTOWN CHILLED WATER MAINS - N. JULIA ST.
7	C-3	DOWNTOWN CHILLED WATER MAINS - JEA HQ
8	C-4	DOWNTOWN CHILLED WATER MAINS - COJ BUILDING
9	C-5	ROADWAY RESTORATION
10	C-6	ROADWAY RESTORATION
11	CD-1	STANDARD CIVIL DETAILS
12	CD-2	STANDARD CIVIL DETAILS
13	CD-3	STANDARD CIVIL DETAILS
14	CD-4	STANDARD CIVIL DETAILS
15	CD-5	STANDARD CIVIL DETAILS
16	CD-6	CONNECTION TO EXISTING MAINS
17	CD-7	CHILLED WATER MAINS INTERCONNECTIONS
18	E-1	FIBER OPTIC CONDUIT - W. DUVAL ST.
19	E-2	FIBER OPTIC CONDUIT - N. JULIA ST.
20	E-3	FIBER OPTIC CONDUIT - JEA HQ
21	E-4	FIBER OPTIC CONDUIT - COJ BUILDING
22	ED-1	STANDARD ELECTRICAL DETAILS
23	GS-1	TEMPORARY TRAFFIC CONTROL NOTES AND LEGEND
24	GS-2	TTC WORK ZONE OVERALL MAP
25	TTC-1	VEHICULAR TTC PLAN - WORK ZONE 1
26	TTC-2	PEDESTRIAN TTC PLAN - WORK ZONE 1
27	TTC-3	VEHICULAR TTC PLAN - WORK ZONE 2
28	TTC-4	PEDESTRIAN TTC PLAN - WORK ZONE 2
29	TTC-5	VEHICULAR TTC PLAN - WORK ZONE 3
30	TTC-6	PEDESTRIAN TTC PLAN - WORK ZONE 3
31	TTC-7	VEHICULAR TTC PLAN - WORK ZONE 4
32	TTC-8	PEDESTRIAN TTC PLAN - WORK ZONE 4
33	TTC-9	VEHICULAR TTC PLAN - WORK ZONE 5
34	TTC-10	PEDESTRIAN TTC PLAN - WORK ZONE 5
35	TTC-11	VEHICULAR TTC PLAN - WORK ZONE 6
36	TTC-12	PEDESTRIAN TTC PLAN - WORK ZONE 6

PROJECT CONTACTS:

A. JEA ~ DIR. SPECIAL PROJECTS ~ NANCY KILGO _ _ _ KILGNA@JEA.COM
B. JEA ~ MGR W/WW SYSTEM PLANNING ~ TODD MACKEY _ _ _ MACKTD@JEA.COM
C. JEA ~ MGR DISTRICT ENERGY OPERATIONS ~ DAVID WILLIAMS _ _ _ WILLDR2@JEA.COM
D. JEA ~ CONSULTING ENGINEER ~ SUSAN WEST _ _ _ WESTSR@JEA.COM
E. JEA ~ W/WW ENGINEER ~ JUSTIN SENCER _ _ _ SENCJB@JEA.COM
F. JEA ~ ENTERPRISE ARCHITECT SPECIALIST ~ RALPH CARY _ _ _ CARYRW@JEA.COM
G. JEA ~ MANAGER, PROJECT DESIGN ~ MICHEAL SHORT _ _ _ SHORML@JEA.COM
H. JEA ~ MGR BUSINESS CLIENTS RELATIONSHIPS KEY ACCTS ~ GEORGINA CARROLL _ _ _ CARRGM@JEA.COM
I. JEA ~ EXECUTIVE CUSTOMER ACCOUNTS ~JONATHAN MICKE _ _ _ MICKJE@JEA.COM
J. JEA ~ PROJECT OUTREACH ~ GREGORY CORCORAN _ _ _ CORCGS@JEA.COM
K. JEA ~ MGR W/WW PROJECT MANAGEMENT ~ ELIZABETH DIMEO _ _ _ DIMEEA@JEA.COM
L. JEA ~ WATER WASTEWATER ENGINEER ~ MARIA BETANCUR _ _ _ BETAMA@JEA.COM
M. JEA ~ CAPITAL PROJECT CONTROLS SPECIALIST ~ KRISTA CARRERE _ _ _ CARRKK@JEA.COM
N. JEA ~ SENIOR PROJECT COST SPECIALIST ~ PAMELA WARREN _ _ _ WARRPC@JEA.COM
O. JEA ~ RYAN COMPANIES ~ PHIL RESMONDO _ _ _ PHIL.RESMONDO@RYANCOMPANIES.COM
P. JEA ~ RYAN COMPANIES ~ BRYAN EVANS _ _ _ BRYAN.EVANS@RYANCOMPANIES.COM
Q. COJ EDWARD BALL BUILDING ~ BUILDING SYSTEMS AND ENERGY CONSERVATION ~GENE TREVAIL _ _ _ GTREVAIL@COJ.COM
R. COJ EDWARD BALL BUILDING ~ BUILDING SUPERVISOR ~ RYAN JENSEN _ _ _ RJENSEN@COJ.COM
S. COJ EDWARD BALL BUILDING ~ HADDAD ENGINEERING ~ PROFESSIONAL ENGINEER ~ SUZANNE LEVISEUR _ _ _ SLEVISEUR@HADDADENG.COM
T. COJ EDWARD BALL BUILDING ~ BROOKS SOLUTIONS ~ ACCOUNT EXECUTIVE ~ KEITH MURPHY _ _ _ KMURPHY@BROOKSSOLUTIONS.COM
U. COJ EDWARD BALL BUILDING ~ BROOKS SOLUTIONS ~ CONTROLS MANAGER ~ TOM MCGUIRE _ _ _ TMCGUIRE@BROOKSSOLUTIONS.COM
V. COJ EDWARD BALL BUILDING ~ BROOKS SOLUTIONS ~ SERVICE MANAGER ~ BILLY MILES _ _ _ BMILES@BROOKSSOLUTIONS.COM
W. COJ PUBLIC PARKING ~ MARK SCHOFIELD _ _ _ 904-255-5862

UNLESS OTHERWISE NOTED:

JEA STANDARD DRAWINGS AND DETAILS ARE APPLICABLE FOR ALL PROJECTS, INCORPORATED BY REFERENCE AND ARE AVAILABLE AT JEA.COM/WORKING_WITH_JEA/ENGINEERING_AND_CONSTRUCTION/REFERENCE_MATERIALS

UNLESS OTHERWISE NOTED:

COJ STANDARD DRAWINGS AND DETAILS ARE APPLICABLE FOR ALL PROJECTS, INCORPORATED BY REFERENCE AND ARE AVAILABLE AT UPON REQUEST FROM COJ - PLANNING AND DEVELOPMENT SERVICES DIVISION

ISSUED FOR BID

Mott MacDonald Florida, LLC
10245 Centurion Parkway North
Suite 320
Jacksonville, Florida 32256
Telephone: (904) 203-1090
Architects AA - C0000035
Engineers EB - 0000155
Surveyors LB - 0006783
MOTT MACDONALD

NO.	BY	DATE	REVISIONS
6.			
5.			
4.			
3.			
2.			
1.			

DESIGN ENGINEER: BRUCE A. NEU
FLORIDA REGISTRATION NO. 51672

DESIGNER: F. NGUYEN
DRAWN BY: D. JACOBS
DATE: OCT 2020
CHECKED BY: P. MOURT
DATE: OCT 2020

JEA Building Community

DOWNTOWN CHILLED WATER MAINS AND FIBER OPTIC CONDUITS

JEA GENERAL NOTES AND SHEET INDEX

PROJ. NO. 502100442-001
DATE: OCT 2020
SCALE: NTS

NO. SHEETS 36
SHEET NO. 1
DRAWING NO. G-1

Xrefs Attached= JEA_SHT22x34_BOR WM [..\d0512226\JEA_SHT22x34_BOR CHM.dwg]
C:\users\jac91951\appdata\local\projectwise\workdir\mott-use-pw-14\d0512217\G-1 CHM.dwg Current Layout Tab = Layout1 Wed Oct 21, 2020 - 10:08

GENERAL NOTES

1. THE CONTRACTOR SHALL CONTACT THE LOCAL PUBLIC UTILITIES LOCATING SERVICE TO LOCATE UTILITIES IN THE AREA PRIOR TO ANY EXCAVATION. ALL EXISTING UTILITIES MAY NOT BE SHOWN ON THE DRAWINGS. THE CONTRACTOR IS RESPONSIBLE FOR LOCATING AND PROTECTING EXISTING UTILITIES, WHETHER SHOWN OR NOT, AND FOR REPAIRING ALL DAMAGE TO UTILITIES.
2. DISTURBANCE SHALL BE LIMITED TO THE TEMPORARY CONSTRUCTION EASEMENTS AND PERMANENT COJ RIGHT OF WAYS. IF TRAVEL LANES ARE DAMAGED DURING CONSTRUCTION IN COJ ROW, REMOVAL AND REPLACEMENT OF FRICTION COURSE MAY BE REQUIRED.
3. THE CONTRACTOR IS RESPONSIBLE FOR PROCURING ALL MOBILIZATION, STORAGE, AND STAGING AREAS AS WELL AS ACCESS TO THE CONSTRUCTION SITES WITHIN THE TEMPORARY AND PERMANENT RIGHT OF WAYS. EROSION CONTROL DEVICES AND BEST MANAGEMENT PRACTICES SHALL BE INSTALLED AND MAINTAINED AT ALL WORK SITES AND STAGING AREAS. THE CONTRACTOR SHALL FOLLOW ALL LOCAL GUIDELINES AND REGULATIONS REGARDING THE WORK, INCLUDING KEEPING MUD AND DIRT OFF PUBLIC ROADS AND PRIVATE ENTRANCES.
4. SOIL EXPLORATION WORK WAS PERFORMED BY MESKEL AND ASSOCIATES ENGINEERING OF JACKSONVILLE FLORIDA (MAE PROJECT No. 0103-0020).
5. ALL OPEN ENDS OF PIPE SHALL BE SECURED WATERTIGHT TO PREVENT WATER INTRUSION AND ENTRY AT THE END OF EACH WORK DAY.
6. ALL AREAS WITH OPEN EXCAVATIONS, OPEN VAULTS OR MANHOLES, OR EQUIPMENT SHALL BE FENCED WITH TEMPORARY SECURE FENCING AT LEAST FOUR FEET HIGH OR CLOSED AT THE END OF EACH WORK DAY. NO OPEN HOLES, VAULTS, EXCAVATIONS, ETC. SHALL BE ALLOWED TO BE LEFT OPEN DURING NON-WORKING HOURS WITHIN COJ RIGHT OF WAY.
7. ANY PUBLIC LAND CORNER, PROPERTY MONUMENTATION, OR BENCH MARK WITHIN THE LIMITS OF CONSTRUCTION SHALL BE PROTECTED. IF A MONUMENT IS IN DANGER OF BEING DESTROYED, THE CONTRACTOR SHALL NOTIFY THE ENGINEER IMMEDIATELY. ANY CORNER MONUMENT DISTURBED OR DESTROYED SHALL BE RESET BY A PROFESSIONAL LAND SURVEYOR LICENSED IN THE STATE OF FLORIDA AT NO ADDITIONAL COST TO THE OWNER.
8. THE CONTRACTOR SHALL IMPLEMENT ONLY TEMPORARY TRAFFIC CONTROL SPECIFIED BY THE ENGINEER OR AS REQUIRED BY COJ PERMIT REQUIREMENTS.
9. THE CONTRACTOR SHALL CONTACT THE ENGINEER OR OWNER IMMEDIATELY SHOULD ANY ISSUE BETWEEN CONSTRUCTION AND THE DRAWINGS ARISE. THE CONTRACTOR SHALL ADHERE TO ALL CONDITIONS AND REQUIREMENTS OF ALL PERMITS THAT HAVE BEEN OBTAINED. SHOULD ANY ISSUES BETWEEN CONSTRUCTION AND THE DRAWINGS ARISE IN COJ ROW, THE CONTRACTOR SHALL ALSO CONTACT THE COJ PRIOR TO ANY DEVIATIONS FROM THE CONSTRUCTION DRAWINGS.
10. FOR ALL TIE-IN PIPING, CROSSINGS, OR VALVES, THE CONTRACTOR SHALL VERIFY ALL EXISTING PIPELINE ELEVATIONS, LOCATIONS, DIAMETERS, AND MATERIALS PRIOR TO SHOP DRAWING SUBMITTALS, NOTIFYING THE ENGINEER OF ANY CONFLICTS.
11. ALL DRIVEWAYS, DRAINAGE PIPES, AND HEADWALLS SHALL BE RESTORED TO EQUAL OR BETTER THAN EXISTING CONDITION. IN BOTH NEW AND EXISTING RIGHT OF WAYS AND WITHIN ANY TEMPORARY EASEMENT AREAS. ANY STRUCTURES OR DRIVEWAYS DISTURBED OUTSIDE OF THE RIGHT OF WAY SHALL BE FULLY RESTORED AT NO COST TO THE PROPERTY OWNER.
12. THE CONTRACTOR SHALL LOCATE AND PROTECT ALL WATER AND SEWER LATERALS SERVICING RESIDENTS AND BUSINESSES THROUGHOUT CONSTRUCTION.
13. WHEN EXCAVATED MATERIALS ARE PLACED ON ROADWAY SURFACES THE CONTRACTOR SHALL PLACE SAND OR STONE SCREENING UNDERNEATH THE EXCAVATED MATERIALS AND SHALL REMOVE SAID MATERIALS AND SWEEP CLEAN ALL RESIDUES FROM THE SURFACES DAILY.
14. THE CONTRACTOR SHALL PROVIDE AN ACCESS CORRIDOR FOR EMERGENCY SERVICES AT ALL TIMES.
15. THE CONTRACTOR SHALL PROVIDE 24 HOURS NOTICE TO TECO GAS PRIOR TO WORK WHICH MAY IMPACT GAS MAINS.
16. THE CONTRACTOR IS RESPONSIBLE FOR MAINTAINING THE CLEAN AND EFFICIENT OPERATIONS OF ALL STORM WATER CONVEYANCE STRUCTURES IN THE AREA IMPACTED BY CONSTRUCTION. THE CONTRACTOR SHALL ENSURE THAT THE CONVEYANCE CAPACITY OF THE STORM WATER INFRASTRUCTURE IS MAINTAINED TO AVOID FLOODING. THE CONTRACTOR SHALL INSTALL STABILIZED CONSTRUCTION ENTRANCES AS DIRECTED BY THE ENGINEER AT LOCATIONS WHERE VEHICULAR TRAFFIC PASSES FROM DISTURBED AREAS TO UNDISTURBED AREAS. THE CONTRACTOR SHALL IMPLEMENT THE EROSION AND SEDIMENT CONTROL MEASURES DESIGNATED BY THE ENGINEER.
17. PAVEMENT, DRIVEWAYS AND SIDEWALKS SHALL BE REMOVED BY FULL DEPTH SAW CUTTING IN STRAIGHT, VERTICAL, LINES.
18. BORING LOCATIONS SHOWN ON THE DRAWINGS ARE FOR INFORMATIONAL PURPOSES ONLY FOR THE CONTRACTORS CONVENIENCE. GEOTECHNICAL DATA SHALL BE GOVERNED BY THE GEOTECHNICAL REPORT PREPARED BY MESKEL AND ASSOCIATES ENGINEERING (MAE PROJECT No. 0103-0020).
19. THE CONTRACTOR SHALL REFERENCE SECTION 4.1 OF THE GEOTECHNICAL REPORT PROVIDED BY MESKEL AND ASSOCIATES ENGINEERING FOR DETAILS ON POTENTIAL GROUND WATER FLUCTUATIONS (MAE PROJECT No. 0103-0020).
20. JEA WATER AND WASTEWATER AND CHILLED WATER STANDARDS MANUAL, 2020 EDITION, SHALL BE THE GOVERNING SPECIFICATION FOR ALL MATERIALS AND METHODS REQUIRED FOR INSTALLATION OF THIS CHILLED WATER MAIN AND SHALL SUPERSEDE ALL CONFLICTING RECOMMENDATIONS UNLESS EXPLICITLY STATED BY THE OWNER (JEA) OR AN AUTHORIZED OWNERS REPRESENTATIVE.
21. THE CONTRACTOR SHALL IMPLEMENT EROSION CONTROL MEASURES IN COMPLIANCE WITH FEDERAL, STATE, AND LOCAL STORM WATER EROSION CONTROL PERMITS AND STANDARDS FOR ALL LAND DISTURBANCES NOT SHOWN IN THESE DRAWINGS.
22. ANY CONSTRUCTION IN COJ RIGHT OF WAY WILL REQUIRE A RIGHT OF WAY PERMIT. THE CONTRACTOR IS RESPONSIBLE FOR CALLING 904-255-8366 DAILY FROM 7:30 A.M. TO 8:30 A.M., WHEN WORKING IN COJ RIGHT OF WAY.

CITY OF JACKSONVILLE EROSION CONTROL NOTES

1. CAUTION: ALL UTILITY LOCATIONS ARE APPROXIMATE AND MUST BE LOCATED PRIOR TO CONSTRUCTION.
2. VEGETATION CLEARING WILL BE KEPT TO THE ABSOLUTE MINIMUM NECESSARY FOR CONSTRUCTION.
3. MATERIAL RESULTING FROM EXCAVATION WILL NOT BE PLACED IN SUCH A MANNER THAT IT IS DISPERSED BY CURRENT OR OTHER FORCES. THE MATERIAL SHOULD BE COLLECTED AND CONTAINED AT ONE SITE AS APPROPRIATE.
4. NO STAGING AREAS WILL BE PLACED IN WETLANDS.
5. APPROPRIATE SILTATION AND EROSION CONTROLS WILL BE USED AND MAINTAINED IN EFFECTIVE OPERATING CONDITION DURING CONSTRUCTION, AND ALL EXPOSED SOIL AND FILLS WILL BE PERMANENTLY STABILIZED AT THE EARLIEST PRACTICABLE DATE.
6. SEDIMENT CONTROL FENCE (SILT FENCE) SHOULD BE INSTALLED AND MAINTAINED FOR THE DURATION OF THE CONSTRUCTION.
7. WHEN CONSTRUCTING IN WETLANDS, THE TOP 6 TO 12 INCHES OF THE TRENCH WILL BE BACK FILLED WITH TOP SOIL FROM THE TRENCH.
8. EXCESS MATERIAL WILL BE REMOVED FROM THE WETLAND AND PLACE ON UPLAND AREAS IMMEDIATELY UPON COMPLETION OF CONSTRUCTION.
9. EXPOSED SLOPES OF STREAM BANKS WILL BE RESTORED TO THEIR ORIGINAL CONTOURS AND STABILIZED IMMEDIATELY UPON COMPLETION OF CONSTRUCTION.
10. ANY TEMPORARY FILLS MUST BE REMOVED IN THEIR ENTIRETY AND THE AFFECTED AREAS RETURNED TO THEIR PRE-EXISTING ELEVATION.
11. ANY DISTURBED AREA WILL BE RESEEDED WITH NATIVE GRASS SEED, AND SEDIMENT CONTROL FENCE SHOULD BE REMOVED IMMEDIATELY UPON COMPLETION OF CONSTRUCTION.
12. WHEN CONSTRUCTING IN CITY LIMITS, ALL ROADWAY DRAINS, SUCH AS INLETS NEAR CURBS OR DROP INLETS ON ROADWAYS WHICH ARE LOCATED WITHIN THE RIGHT-OF-WAY, SHALL BE PROTECTED WITH TYPICAL INLET SEDIMENT FILTERS. THESE FILTERS WILL BE REMOVED IMMEDIATELY UPON COMPLETION OF CONSTRUCTION.
13. ALL CABLE MARKERS TO BE PLACED AS FAR BACK TO RIGHT-OF-WAY LINE AS POSSIBLE.

DETAIL NUMBER — XX
SHEET NUMBER — XX-X

GENERAL LEGEND

	EXISTING	PROPOSED
RIGHT OF WAY LINE		
FENCE (HEIGHT & MAT'L. INDICATED)	X 6' CHAIN LINK X	X 6' CHAIN LINK X
DITCH OR SWALE		
SPOT ELEVATION	× (100.00) × 100.00	
WETLAND FLAG	WF D-20	
IRON PIPE	I.P.	
CONCRETE MONUMENT	CM	
SOIL BORING (NUMBER INDICATED)	B-XX	
TEST HOLE (NUMBER INDICATED)	TH-XX	
ASPHALT OR CONCRETE CORE SAMPLE (NUMBER INDICATED)	A-XX	
BENCHMARK (NUMBER INDICATED)	BM-XX	
CONTROL POINT (NUMBER INDICATED)	CP-XX	
GROUND MONITORING WELL	GW-XX	
SIGN - TYPE INDICATED	OR SIGN	
BUSH, SHRUB OR HEDGE	SHRUB	
SILT BERM		
SILT FENCE		
TREE, SIZE & TYPE INDICATED	12" O	
MAIL BOX	MB	
SPRINKLER HEAD		
POST (AS NOTED)		
BOLLARD/POST (AS NOTED)		
COJ SIDEWALK RESTORATION BY CONTRACTOR		
COJ ROADWAY TRENCH AND PAVEMENT RESTORATION BY CONTRACTOR		
COJ PAVED ROADWAY MILL AND OVERLAY BY CONTRACTOR		
COJ PAVED CURB RESTORATION BY CONTRACTOR		
FIBER MANHOLE (30'"X 60" X 30")		
FIBER CURB MARKER	CB	CB
SPLICE LOCATION	FOC	FOC

UTILITY SYMBOLS

	EXISTING
ELECTRIC POLE OR S.B.T. POLE (WOOD)	PP OR PP (WITH LIGHT)
WOOD POWER POLE	WPP
ELECTRIC POLE OR S.B.T. POLE (CONC.)	PP OR PP (WITH LIGHT)
POWER POLE	
GUY WIRE	
TRAFFIC SIGNAL POLE	TS
WATER METER	WM
WATER METER WITH TOUCHREAD	WM(TR)
TELEPHONE BOX	T
CATV BOX	CATV
GAS VALVE	
TELEPHONE MANHOLE	TEL
DRAINAGE MANHOLE	SD
ELECTRIC MANHOLE	E
SANITARY MANHOLE	SAN
UNKNOWN MANHOLE	
SANITARY SEWER VALVE	SAN
NON-POTABLE WATER VALVE	NPW
WATER VALVE COVER	WATER
WATER METER	W
WATER VALVE	WATER
UTILITY SERVICE BOX	
GAS MARKER	GAS MRKR

UTILITY SYMBOLS (CONT.)

	EXISTING	PROPOSED
DRAIN PIPE	D D	
CATCH BASIN		
STORM DRAIN GRATE		
CULVERT (SIZE & MAT'L. INDICATED)	18" CMP	
CULVERT W/ENDWALLS (SIZE & MAT'L. INDICATED)	18" CMP	
UNDERGROUND CABLE TV	CATV	
UNDERGROUND GAS LINE	G	
BURIED TELEPHONE	BT	
BURIED ELECTRIC LINE	BE	
BURIED FIBER OPTIC	BFO	
OVERHEAD ELECTRIC LINE	OHE	
OVERHEAD TELEPHONE LINE	OT	
TRAFFIC SENSOR	TS	
UNDERGROUND UNKNOWN UTILITY	UNK	
GATE VALVE		
FIRE HYDRANT	HYD	
REDUCER		
STORM SEWER (SIZE & MAT'L. INDICATED)	SD 12" RCP	
CHILLED WATER MAIN SUPPLY (SIZE & MAT'L. INDICATED)	CH-WM	
CHILLED WATER MAIN RETURN (SIZE & MAT'L. INDICATED)	CH-WM	
GRAVITY SEWER (SIZE & MAT'L. INDICATED)	S 8" PVC	
SEWER FORCE MAIN (SIZE & MAT'L. INDICATED)	FM 10" PVC	
RECLAIMED WATER (SIZE & MAT'L. INDICATED)	RE 10" PVC	

ABBREVIATIONS:

AC	ASBESTOS CEMENT
AG	ALLEY GRATE
BL	BASE LINE
BM	BENCH MARK
BC	BOTTOM OF CURVE
BE	BURIED ELECTRIC
BT	BURIED TELEPHONE
CATV	CABLE TV UNDERGROUND
CB	CATCH BASIN
CI	CAST IRON
CL	CENTER LINE
CEP	CITY ELECTRIC POLE
CH-WM	CHILLED WATER MAIN
COJ	CITY OF JACKSONVILLE
CONC	CONCRETE
CONST	CONSTRUCTION
CMP	CORRUGATED METAL PIPE
CMPA	CORRUGATED METAL PIPE ARCH
CPP	CONCRETE POWER POLE
CULV	CULVERT
C&G	CURB & GUTTER
C	CUT
DBI	DITCH BOTTOM INVERT
DW OR DR	DRIVEWAY
DI	DUCTILE IRON
EOP	EDGE OF PAVEMENT
ELEV	ELEVATION
ERCP	ELLIPTICAL REINFORCED CONC. PIPE
EXP JT	EXPANSION JOINT
F	FILL
FH	FIRE HYDRANT
FL	FLOW LINE
FM	FORCE MAIN
FO & FOC	FIBER OPTIC CABLE UNDERGROUND
FOTC	FIBER OPTIC TOWER CLOUD UNDERGROUND
GALV / GLV	GALVANIZED
G	GAS LINE
GV	GAS VALVE
HDD	HORIZONTAL DIRECTIONAL DRILL
HDPE	HIGH DENSITY POLYETHYLENE PIPE
HW	HEAD WALL
HC	HIGH CURB
ID	INSIDE DIAMETER
INT	INTERSECTION
INV	INVERT
IP	IRON PIPE
IRR	IRRIGATION PIPE
LT	LEFT
MB	MAIL BOX
MH	MANHOLE
NTS	NOT TO SCALE
OD	OUTSIDE DIAMETER
OHE	OVERHEAD ELECTRIC
OT	OVERHEAD TELEPHONE
PRM	PERMANENT REFERENCE MONUMENT
PVC	POLYVINYL CHLORIDE
r	RADIUS
R	RATE
RE	RECLAIMED WATER
RCP	REINFORCED CONCRETE PIPE
RT	RIGHT
R/W	RIGHT OF WAY
RD	ROOF DRAIN
SJRWMD	ST JOHNS RIVER WATER MANAGEMENT DISTRICT
SL	STREET LIGHT POWER
S/W	SIDE WALK
STA	STATION
TCP	TERRA COTTA PIPE
TOP	TOP OF PIPE
TS	TRAFFIC SENSOR
UNK	UNKNOWN
USC & GS	UNITED STATES COASTAL & GEODETIC SURVEY
VC	VITRIFIED CLAY
WM	WATER MAIN
WV	WATER VALVE
WLP	WOOD LIGHT POLE
WPP	WOOD POWER POLE
WTP	WOOD TELEPHONE POLE

ISSUED FOR BID

MOTT MACDONALD
Mott MacDonald Florida, LLC
10245 Centurion Parkway North
Suite 320
Jacksonville, Florida 32256
Telephone: (904) 203-1090
Architects AA - C0000035
Engineers EB - 0000155
Surveyors LB - 0006783

REVISIONS

NO.	BY	DATE
6.		
5.		
4.		
3.		
2.		
1.		

DESIGN ENGINEER: BRUCE A. NEU
FLORIDA REGISTRATION NO. 51672

DESIGNER: F. NGUYEN
DRAWN BY: D. JACOBS
DATE: OCT 2020
CHECKED BY: P. MOURT
DATE: OCT 2020

JEA Building Community

DOWNTOWN CHILLED WATER MAINS AND FIBER OPTIC CONDUITS
ABBREVIATIONS, GENERAL LEGEND & SYMBOLS

PROJ. NO. 502100442-001
DATE: OCT 2020
SCALE: NTS

NO. SHEETS 36
SHEET NO. 2
DRAWING NO. G-2

C:\users\jac91951\appdata\local\projectwise\workdir\mott-use-pw-14\d0512217\G-2 CHM.dwg Current Layout Tab = Layout1 Thu Oct 22, 2020 - 11:49
Xrefs Attached= JEA_SHT22x34_BOR WM [..\d0512226\JEA_SHT22x34_BOR CHM.dwg]

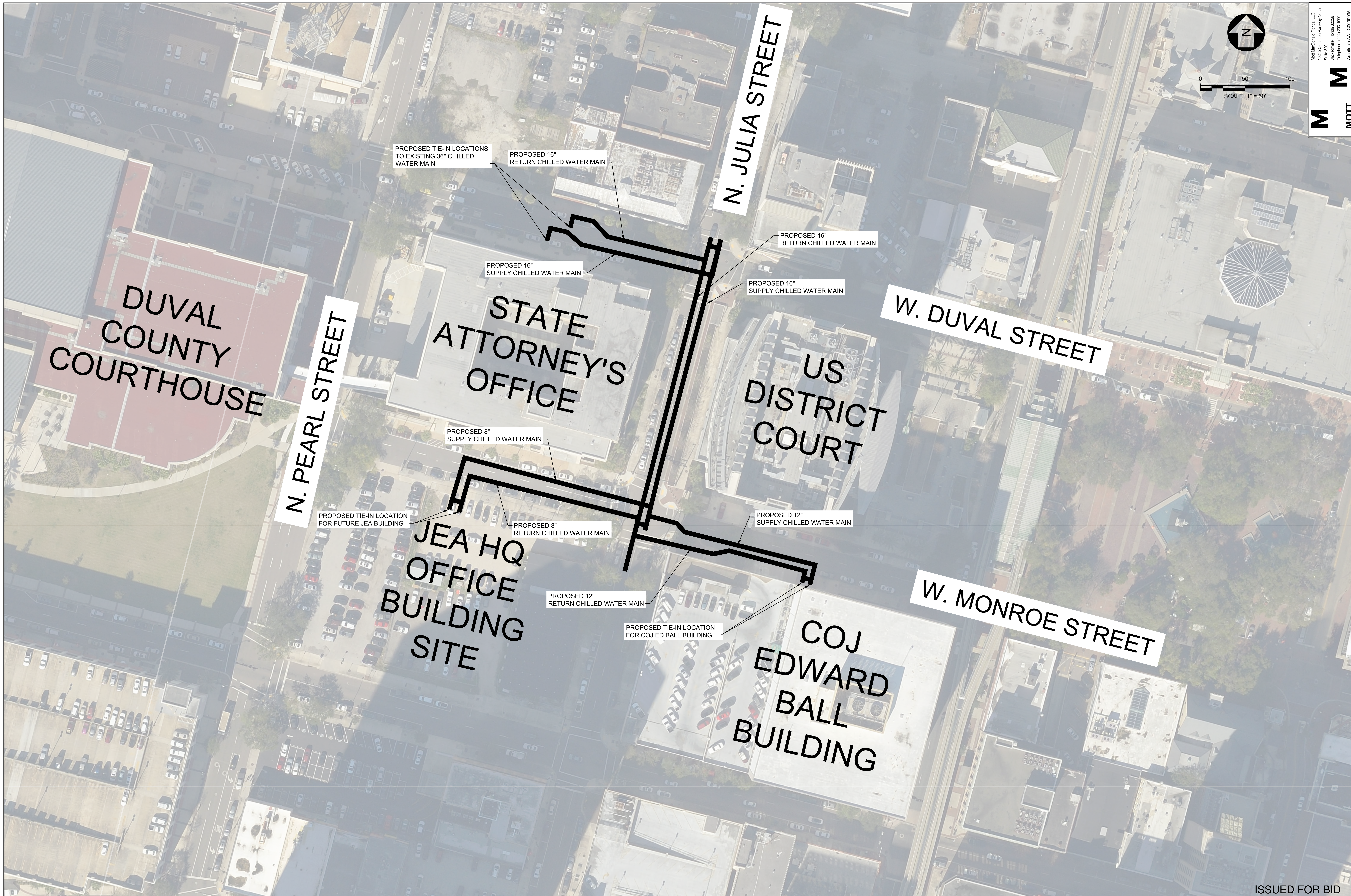

ISSUED FOR BID

MOTT MACDONALD

Mott MacDonald Florida, LLC
10245 Centurion Parkway North
Suite 320
Jacksonville, Florida 32256
Telephone: (904) 203-1090
Architects AA - C0000035
Engineers EB - 0000155
Surveyors LB - 0006783

REVISIONS

NO.	BY	DATE
6.		
5.		
4.		
3.		
2.		
1.		

DESIGN ENGINEER
BRUCE A. NEU
FLORIDA REGISTRATION NO.
51672

DESIGNER:	F. NGUYEN
DRAWN BY:	D. JACOBS
DATE:	OCT 2020
CHECKED BY:	P. MOURT
DATE:	OCT 2020

JEA Building Community

DOWNTOWN CHILLED WATER MAINS AND FIBER OPTIC CONDUITS

PROJECT SCOPE AND LAYOUT

PROJ. NO. 502100442-001
DATE: OCT 2020
SCALE: 1" = 50'

NO. SHEETS 36
SHEET NO. 3
DRAWING NO. G-3

C:\users\jac91951\appdata\local\projectwise\workdir\mott-use-pw-14\d0512217\G-3.dwg   Current Layout Tab = G-3   Wed Oct 21, 2020 – 10:07

Xrefs Attached= JEA_SHT22x34_BOR WM [..\d0512226\JEA_SHT22x34_BOR CHM.dwg]
JEA_SHT22x34_BOR RE-WM [..\d0455306\JEA_SHT22x34_BOR RE-WM.dwg]
x-Proposed_CHM [..\d0512201\x-Proposed_CHM.dwg]

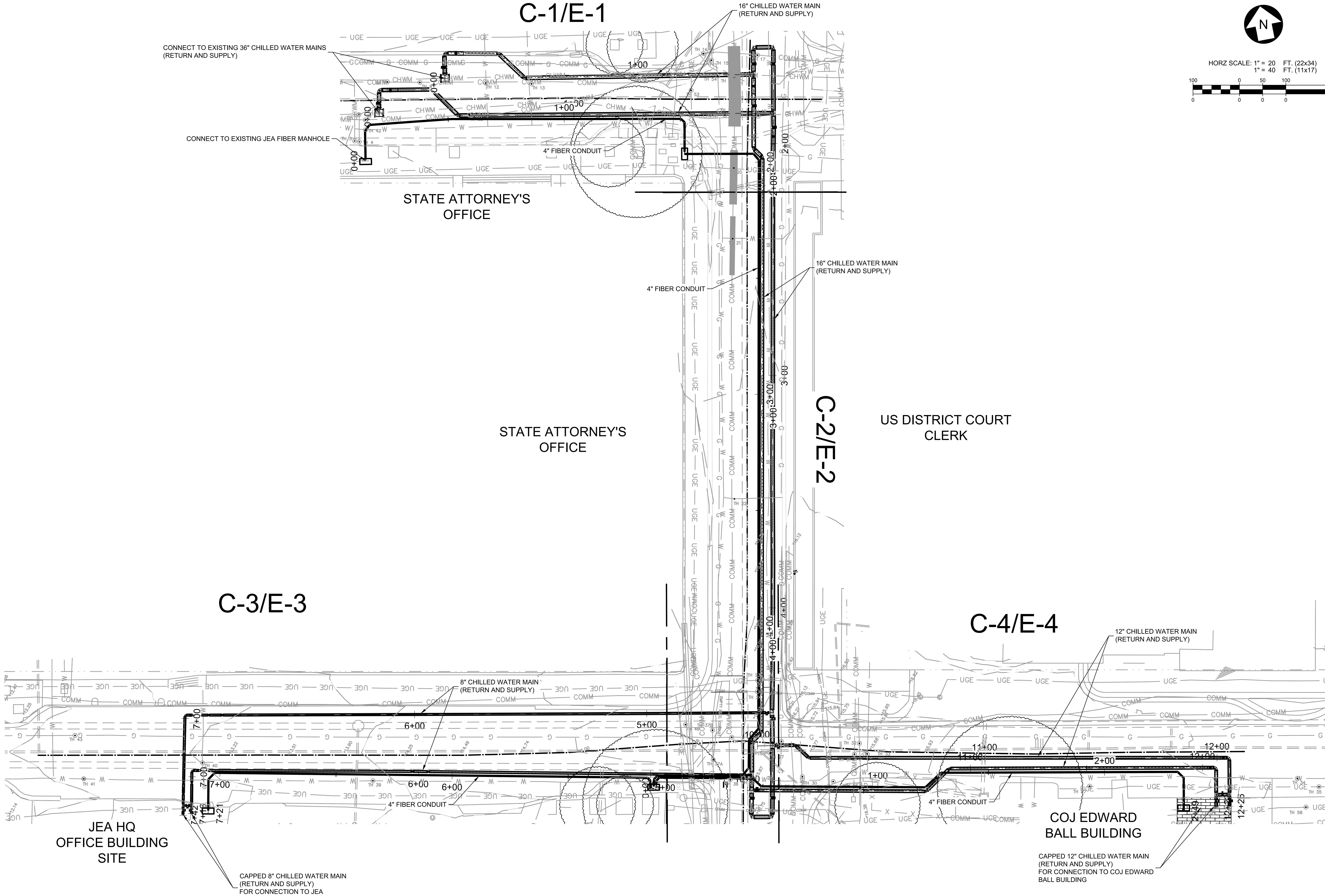

ISSUED FOR BID

Mott MacDonald Florida, LLC
10245 Centurion Parkway North
Suite 320
Jacksonville, Florida 32256
Telephone: (904) 203-1090
Architects AA - C0000035
Engineers EB - 0000155
Surveyors LB - 0006783

MOTT MACDONALD

NO.	BY	DATE	REVISIONS
6.			
5.			
4.			
3.			
2.			
1.			

DESIGN ENGINEER
BRUCE A. NEU
FLORIDA REGISTRATION NO.
51672

DESIGNER:	F. NGUYEN
DRAWN BY:	D.SYMMES
DATE:	OCT 2020
CHECKED BY:	P. MOURT
DATE:	OCT 2020

JEA Building Community

DOWNTOWN CHILLED WATER MAINS AND FIBER OPTIC CONDUITS
SHEET KEY PLAN

PROJ. NO. 502400409-001
DATE: OCT 2020
SCALE: AS NOTED

NO. SHEETS 36
SHEET NO. 4
DRAWING NO. G-4

Xrefs Attached= JEA_SHT22x34_BOR WM [..\d0512226\JEA_SHT22x34_BOR CHM.dwg]
x-Proposed_CHM Route A [..\d0512201\x-Proposed_CHM.dwg]
x-survey [..\d0512201\x-survey.dwg]
x-Proposed_FOC V2 [..\d0512201\x-Proposed_FOC V2.dwg]
x-Proposed_CHM [..\d0512201\x-Proposed_CHM.dwg]
C:\users\jac91951\appdata\local\projectwise\workdir\mott-use-pw-14\d0512217\G-4 CHM.dwg Current Layout Tab = G-4 Thu Oct 22, 2020 - 11:32

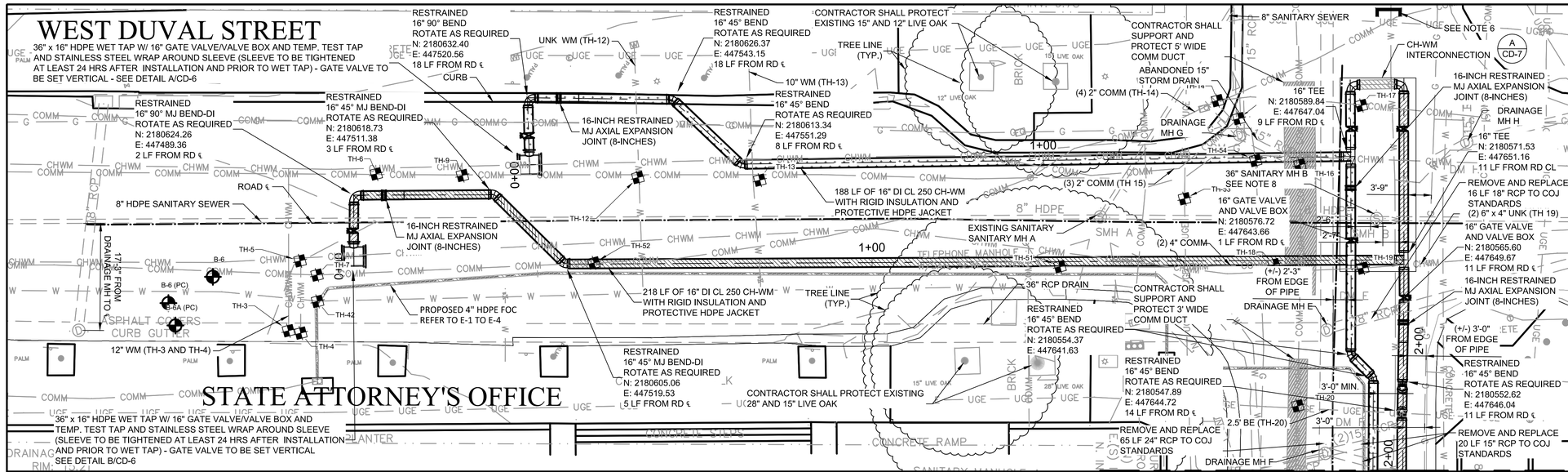

HORZ SCALE: 1" = 10 FT. (22x34)
1" = 20 FT. (11x17)

VERT SCALE: 1" = 2.5 FT. (22x34)
1" = 5 FT. (11x17)

SANITARY MANHOLE A:
RIM: 14.09'
E. INV: 7.65'
N.E. INV: 8.22'
W. INV: 7.65'

SANITARY MANHOLE B:
RIM: 14.48'
E. INV: 7.79
W. INV: 7.91'

DRAINAGE MANHOLE E:
RIM: 14.68'
W. INV: 5.78'
N. INV: 8.86'
E. INV: 7.00'
S. INV: 8.95'

DRAINAGE MANHOLE F:
RIM: 14.67
W. (N) INV: 9.06'
W.(NS INV: 8.99'
N. INV 8.86'
A.E. INV: 9.34'
S.E INV: 9.34'
N. INV: 8.50'

DRAINAGE MANHOLE G:
RIM: 14.05'
N.W. INV: 9.88'
S.E. INV: 9.82' PIPE CAPPED
N. INV: 9.78'

DRAINAGE MANHOLE H:
RIM: 14.22'
N. INV: 10.79'
E. INV: 10.14'
S.W. INV: 10.69' PIPE CAPPED

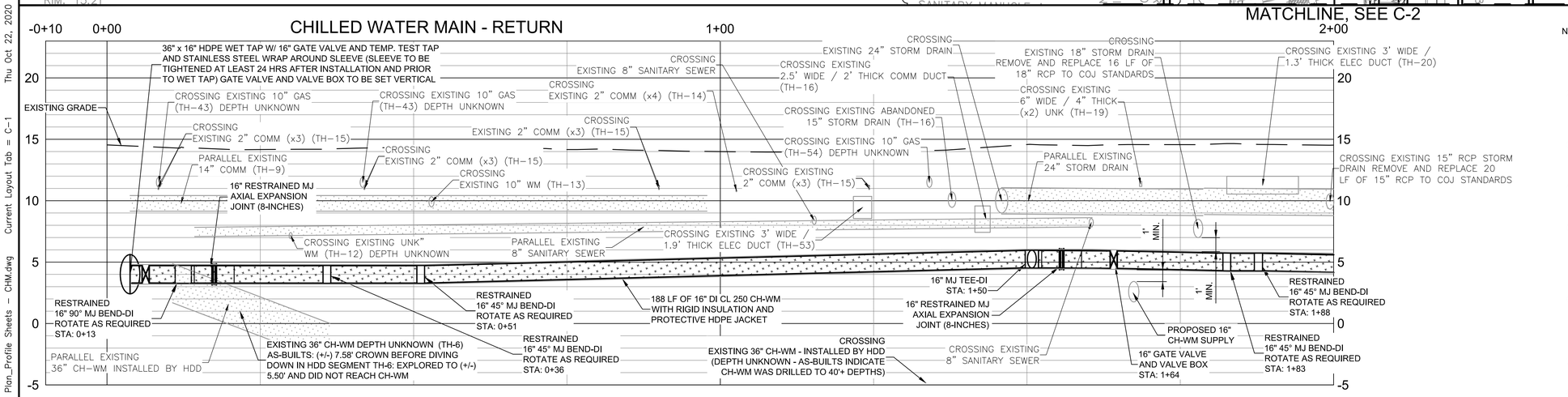

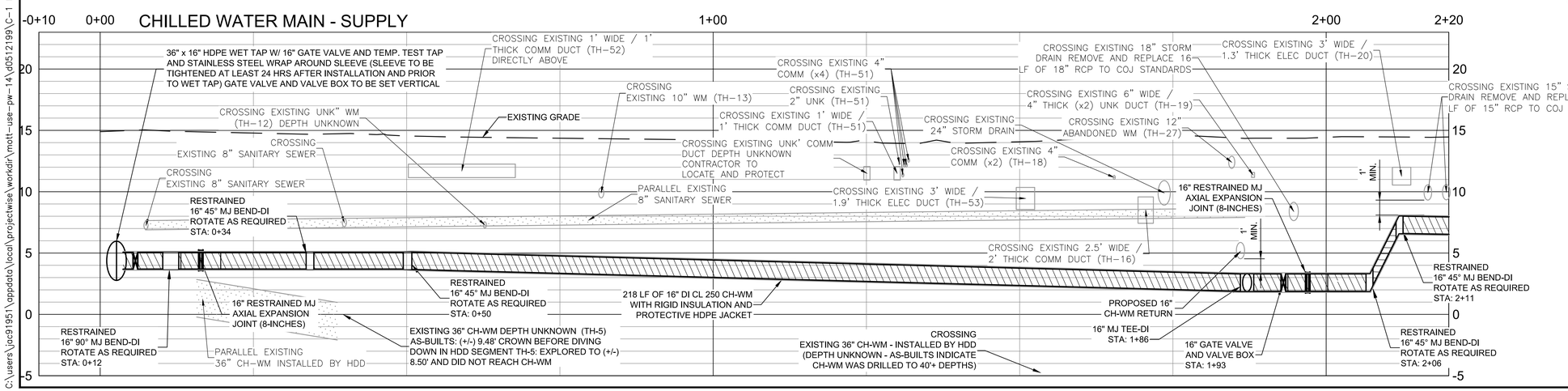

NOTES:

1) ACCESS TO THE STATE ATTORNEY'S OFFICE SHALL NOT BE DISRUPTED. CONTRACTOR SHALL COORDINATE WITH JEA AND COJ STAFF FOR CONTINUOUS BUILDING ACCESS.

2) THE CONTRACTOR SHALL ONLY CONDUCT CONSTRUCTION SET UP, ACTIVITIES, AND CLEAN UP BETWEEN THE HOURS OF 7:00 PM TO 5:00 AM ON EACH WEEKDAY AND FROM MIDNIGHT FRIDAY THROUGH 5:00 AM MONDAY ON WEEKENDS.

3) THE CONTRACTOR SHALL CLEAN UP ALL CONSTRUCTION EQUIPMENT AND PROTECT CONSTRUCTION EQUIPMENT FROM THE GENERAL PUBLIC.

4) ALL DUCTILE IRON JOINTS, FITTINGS AND VALVES TO BE INSULATED AND ENCASED IN HDPE JACKETING WITH HEAT SHRINK SEALS AS SPECIFIED.

5) THE CONTRACTOR SHALL NOTIFY THE CITY OF JACKSONVILLE TRAFFIC ENGINEER DIVISION 48 HOURS IN ADVANCE OF BEGINNING SIGNAL WORK TO OBSERVE INSTALLATIONS.
   CONTACT: MIGUEL CAMACHO
   PHONE: 904-255-7549
   EMAIL: MCAMACHO@COJ.NET

6) CONTRACTOR SHALL REMOVE AND SEAL EXISTING ABANDONED 12" WM-DI SEGMENT REQUIRED FOR INSTALLATION OF THE CH-WMS AND FIBER OPTIC CONDUITS. APPROXIMATE REMOVAL LIMITS OF THE EXISTING WATER MAIN ARE SHOWN. JEA AS-BUILTS INDICATE THAT THE ABANDONED WATER MAIN IS GROUT FILLED.

7) ALL CHILLED WATER PIPE, FITTINGS AND VALVES SHALL HAVE RESTRAINED JOINTS.

8) CONTRACTOR SHALL PROTECT EXISTING ACTIVE 36" SANITARY MANHOLE AND MAINTAIN CONTINUAL SERVICE DURING CONSTRUCTION.

ISSUED FOR BID

MOTT MACDONALD
Mott MacDonald Florida, LLC
10245 Centurion Parkway North
Suite 100
Jacksonville, Florida 32256
Telephone: (904) 203-1090
Architects AA - C000003035
Engineers EB - 0000155
Surveyors LB - 0006783

NO.	BY	DATE	REVISIONS
6.			
5.			
4.			
3.			
2.			
1.			

DESIGN ENGINEER
BRUCE A. NEU
FLORIDA REGISTRATION NO. 51672

DESIGNER:	F. NGUYEN
DRAWN BY:	D. JACOBS
DATE:	OCT 2020
CHECKED BY:	P. MOURIT
DATE:	OCT 2020

JEA Building Community

DOWNTOWN CHILLED WATER MAINS AND FIBER OPTIC CONDUITS
DOWNTOWN CHILLED WATER MAINS - W. DUVAL ST.

PROJ. NO. 502100442-001
DATE: OCT 2020
SCALE: HORIZ: 1" = 10' VERT: 1" = 5'

NO. SHEETS 63
SHEET NO. 5
DRAWING NO. C-1

C:\users\jco91951\appdata\local\projectwise\workdir\mott-use-pw-14\d0512199\C-1 Plan_Profile Sheets - CHM.dwg Current Layout Tab = C-1 Thu Oct 22, 2020 - 11:26

NOTES:
1) THE CONTRACTOR SHALL ONLY CONDUCT CONSTRUCTION SET UP, ACTIVITIES, AND CLEAN UP BETWEEN THE HOURS OF 7:00 PM TO 5:00 AM ON EACH WEEKDAY AND FROM MIDNIGHT FRIDAY THROUGH 5:00 AM MONDAY ON WEEKENDS. THE CONTRACTOR SHALL CLEAN UP ALL CONSTRUCTION EQUIPMENT AND PROTECT CONSTRUCTION EQUIPMENT FROM THE GENERAL PUBLIC.
2) ALL DUCTILE IRON JOINTS, FITTINGS AND VALVES TO BE INSULATED AND ENCASED IN HDPE JACKETING WITH HEAT SHRINK SEALS AS SPECIFIED.
3) THE CONTRACTOR SHALL NOTIFY THE CITY OF JACKSONVILLE TRAFFIC ENGINEER DIVISION 48 HOURS IN ADVANCE OF BEGINNING SIGNAL WORK TO OBSERVE INSTALLATIONS.
CONTACT: MIGUEL CAMACHO
PHONE:904-255-7549
EMAIL: MCAMACHO@COJ.NET
4) ALL CHILLED WATER PIPE, FITTINGS AND VALVES SHALL HAVE RESTRAINED JOINTS.

HORZ SCALE: 1" = 10 FT. (22x34)
1" = 20 FT. (11x17)
VERT SCALE: 1" = 2.5 FT. (22x34)
1" = 5 FT. (11x17)

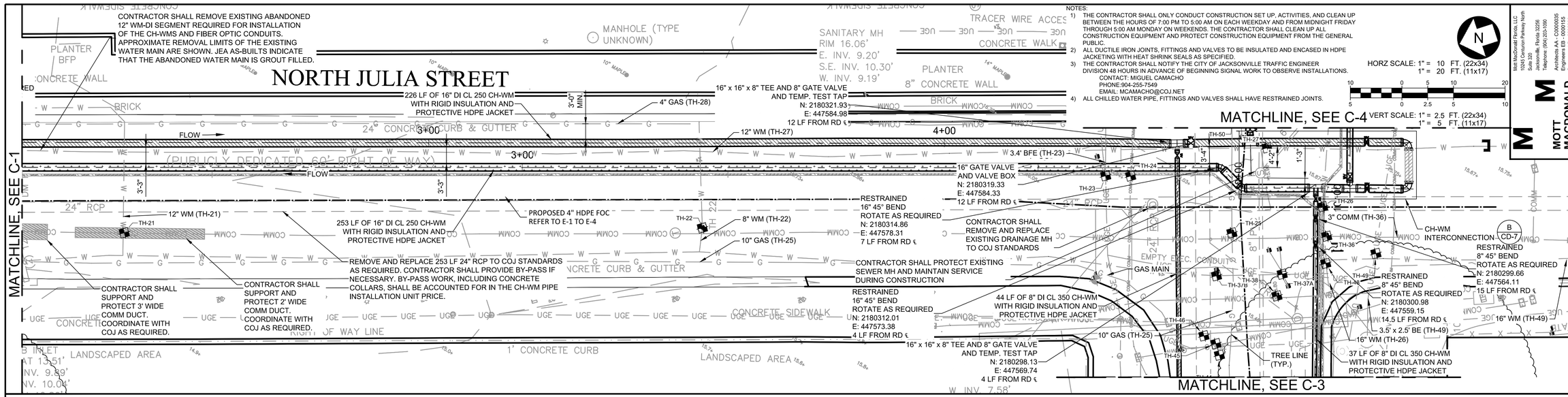

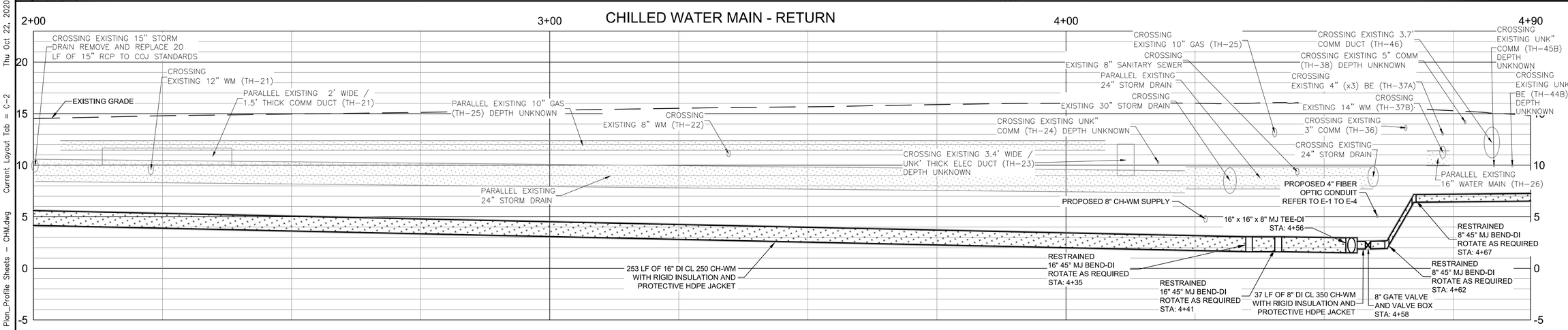

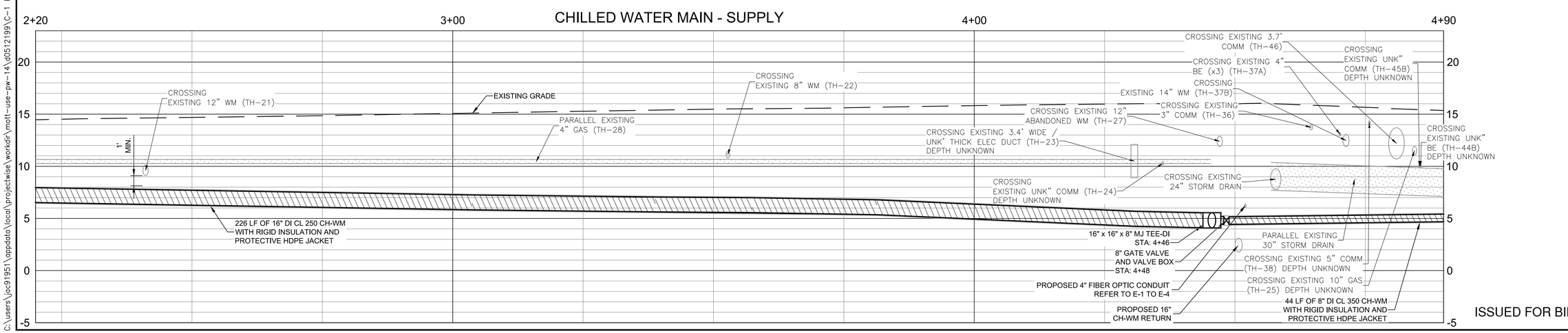

ISSUED FOR BID

MOTT MACDONALD
Mott MacDonald Florida, LLC
10245 Centurion Parkway North
Suite 100
Jacksonville, Florida 32256
Telephone: (904) 205-1090
Architects AA - C000003035
Engineers EB - 0000155
Surveyors LB - 0006783

NO.	BY	DATE	REVISIONS
5			
4			
3			
2			
1			

DESIGN ENGINEER
BRUCE A. NEU
FLORIDA REGISTRATION NO. 51672

DESIGNER:	F. NGUYEN
DRAWN BY:	D. JACOBS
DATE:	OCT 2020
CHECKED BY:	P. MOURTT
DATE:	OCT 2020

JEA Building Community

DOWNTOWN CHILLED WATER MAINS AND FIBER OPTIC CONDUITS
DOWNTOWN CHILLED WATER MAINS - N. JULIA ST.

PROJ. NO. 502100442-001
DATE: OCT 2020
SCALE: HORIZ: 1" = 10' VERT: 1" = 5'

NO. SHEETS 30
SHEET NO. 6
DRAWING NO. C-2

C:\users\jac91951\appdata\local\projectwise\workdir\mott-use-pw-14\d0512199\C-1 Plan_Profile Sheets - CHM.dwg Current Layout Tab = C-2 Thu Oct 22, 2020 - 11:27

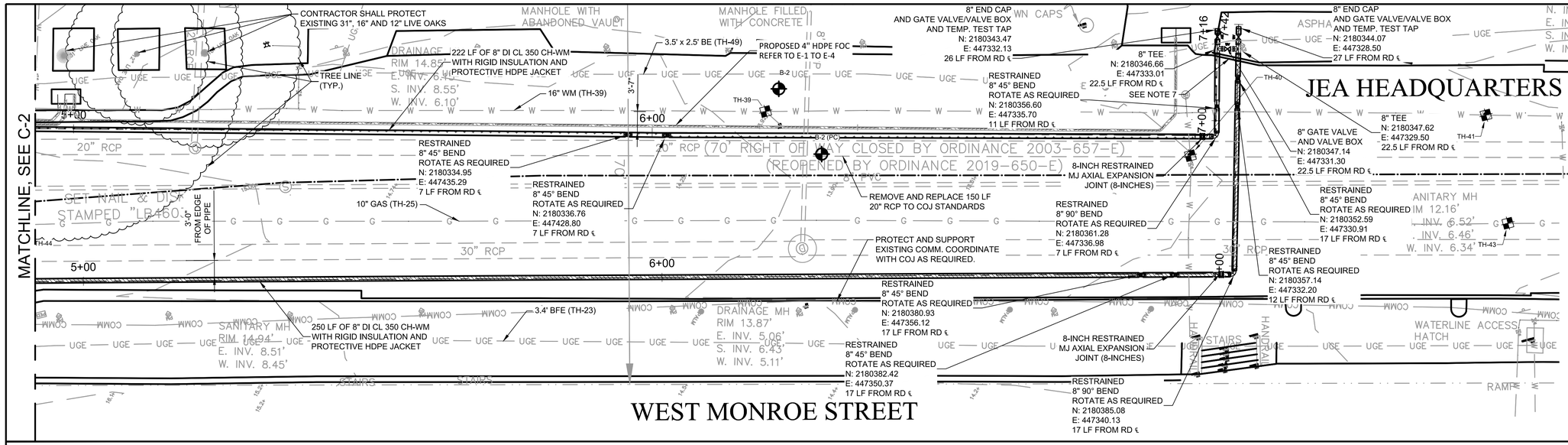

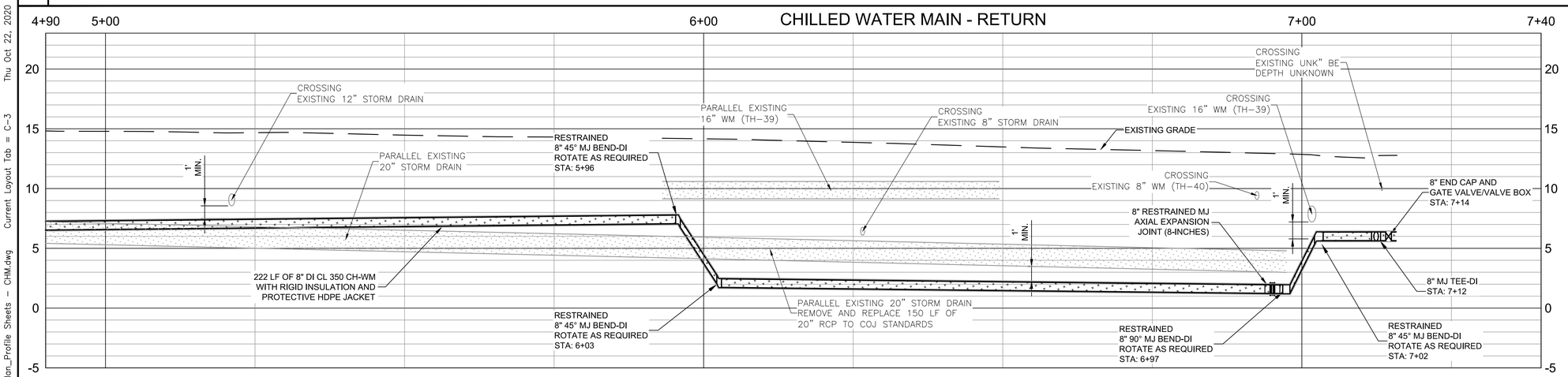

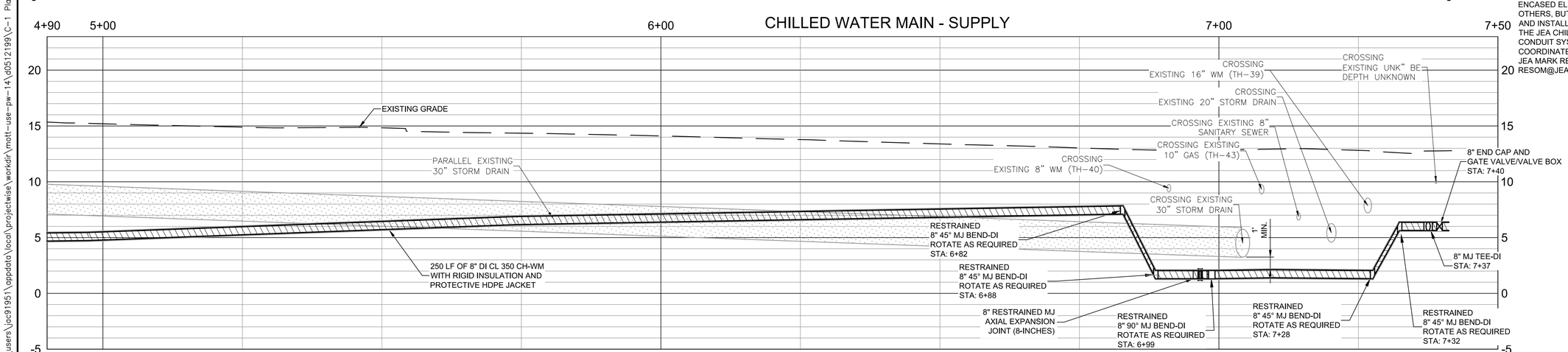

NOTES:

1) ACCESS TO THE STATE ATTORNEY'S OFFICE SHALL NOT BE DISRUPTED. CONTRACTOR SHALL COORDINATE WITH JEA AND COJ STAFF FOR CONTINUOUS BUILDING ACCESS.
2) THE CONTRACTOR SHALL ONLY CONDUCT CONSTRUCTION SET UP, ACTIVITIES, AND CLEAN UP BETWEEN THE HOURS OF 7:00 PM TO 5:00 AM ON EACH WEEKDAY AND FROM MIDNIGHT FRIDAY THROUGH 5:00 AM MONDAY ON WEEKENDS.
3) THE CONTRACTOR SHALL CLEAN UP ALL CONSTRUCTION EQUIPMENT AND PROTECT CONSTRUCTION EQUIPMENT FROM THE GENERAL PUBLIC.
4) ALL DUCTILE IRON JOINTS, FITTINGS AND VALVES TO BE INSULATED AND ENCASED IN HDPE JACKETING WITH HEAT SHRINK SEALS AS SPECIFIED.
5) JEA HEADQUARTERS SITE RYAN COMPANIES CONTACT POINT
PHIL RESMONDO - SENIOR SUPERINTENDENT
PHONE: 813-853-6174
BRYAN EVANS - SUPERINTENDENT
PHONE: 352-213-0680
6) ALL CHILLED WATER PIPE, FITTINGS AND VALVES SHALL HAVE RESTRAINED JOINTS.
7) CONTRACTOR SHALL SAW OR CORE CONCRETE.
8) PRELIMINARY ALIGNMENT FOR THE JEA HEADQUARTERS ELECTRICAL SERVICE FEEDER WILL BE BETWEEN THE 20-INCH RCP STORM DRAIN AND THE 8-INCH PVC SANITARY SEWER RUNNING EAST TO WEST ALONG WEST MONROE STREET. FURNISH AND INSTALLATION OF THIS 25-INCH WIDE BY 30-INCH HIGH CONCRETE ENCASED ELECTRICAL DUCT BANK WILL BE BY OTHERS, BUT COORDINATED DURING FURNISH AND INSTALLATION AND OPEN EXCAVATION OF THE JEA CHILLED WATER PIPING AND FIBER OPTIC CONDUIT SYSTEM. CONTRACTOR SHALL COORDINATE ACTIVITIES AND SCHEDULE WITH JEA MARK RESOS, (904) 424-2921, RESOM@JEA.COM.

ISSUED FOR BID

MOTT MACDONALD
Mott MacDonald Florida, LLC
10245 Centurion Parkway North
Suite 100
Jacksonville, Florida 32256
Telephone: (904) 205-1090
Architects AA - C000003S
Engineers EB - 0000155
Surveyors LB - 0006783

NO.	BY	DATE	REVISIONS
6.			
5.			
4.			
3.			
2.			
1.			

DESIGN ENGINEER
BRUCE A. NEU
FLORIDA REGISTRATION NO. 51672

DESIGNER:	F. NGUYEN
DRAWN BY:	D. JACOBS
DATE:	OCT 2020
CHECKED BY:	P. MOURTT
DATE:	OCT 2020

JEA Building Community

DOWNTOWN CHILLED WATER MAINS AND FIBER OPTIC CONDUITS
DOWNTOWN CHILLED WATER MAINS - JEA HQ

PROJ. NO. 502100442-001
DATE: OCT 2020
SCALE: HORIZ: 1" = 10' VERT: 1" = 5'

NO. SHEETS 35
SHEET NO.
DRAWING NO. C-3

C:\users\jea91951\appdata\local\projectwise\workdir\mott-use-pw-14\d0512199\C-1 Plan_Profile Sheets - CHM.dwg Current Layout Tab = C-3 Thu Oct 22, 2020 - 11:27

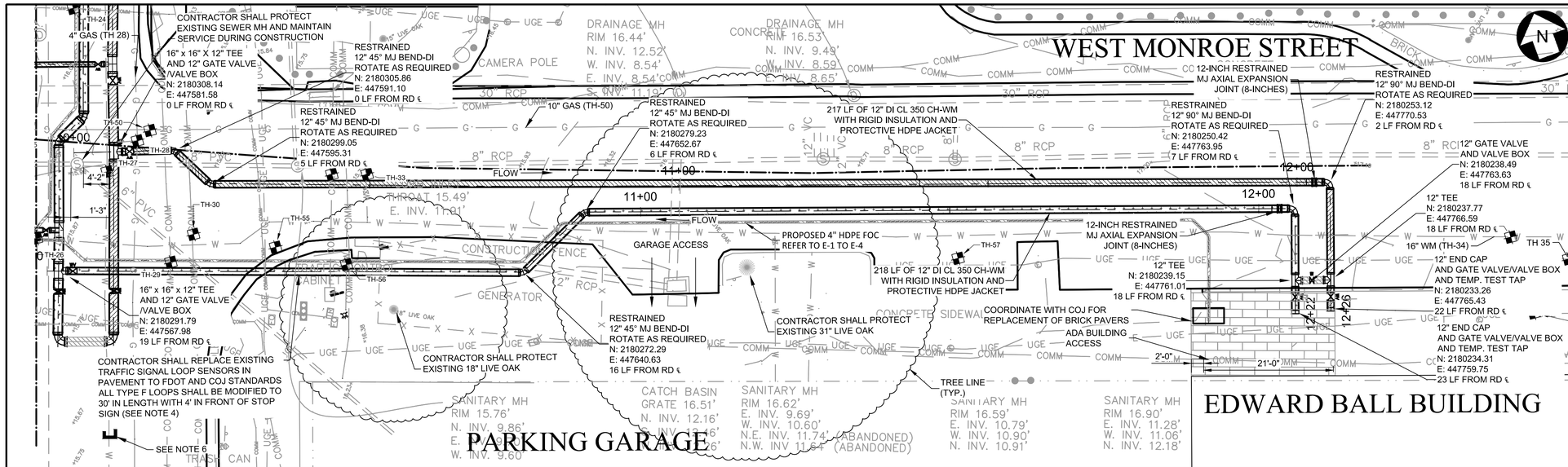

NOTES:

1) THE CONTRACTOR SHALL ONLY CONDUCT CONSTRUCTION SET UP, ACTIVITIES, AND CLEAN UP BETWEEN THE HOURS OF 7:00 PM TO 5:00 AM ON EACH WEEKDAY AND FROM MIDNIGHT FRIDAY THROUGH 5:00 AM MONDAY ON WEEKENDS.

2) THE CONTRACTOR SHALL CLEAN UP ALL CONSTRUCTION EQUIPMENT AND PROTECT CONSTRUCTION EQUIPMENT FROM THE GENERAL PUBLIC.

3) ALL DUCTILE IRON JOINTS, FITTINGS AND VALVES TO BE INSULATED AND ENCASED IN HDPE JACKETING WITH HEAT SHRINK SEALS AS SPECIFIED.

4) THE CONTRACTOR SHALL NOTIFY THE CITY OF JACKSONVILLE TRAFFIC ENGINEER DIVISION 48 HOURS IN ADVANCE OF BEGINNING SIGNAL WORK TO OBSERVE INSTALLATIONS.
CONTACT: MIGUEL CAMACHO
PHONE: 904-255-7549
EMAIL: MCAMACHO@COJ.NET

7) ALL CHILLED WATER PIPE, FITTINGS AND VALVES SHALL HAVE RESTRAINED JOINTS.

8) CONTRACTOR SHALL REMOVE EXISTING ABANDONED 12" WM-DI SEGMENT REQUIRED FOR INSTALLATION OF THE CH-WMS AND FIBER OPTIC CONDUITS. APPROXIMATE REMOVAL LIMITS OF THE EXISTING WATER MAIN ARE SHOWN. JEA AS-BUILTS INDICATE THAT THE ABANDONED WATER MAIN IS GROUT FILLED.

HORZ SCALE: 1" = 10 FT. (22x34)
1" = 20 FT. (11x17)

VERT SCALE: 1" = 2.5 FT. (22x34)
1" = 5 FT. (11x17)

CHILLED WATER MAIN - RETURN

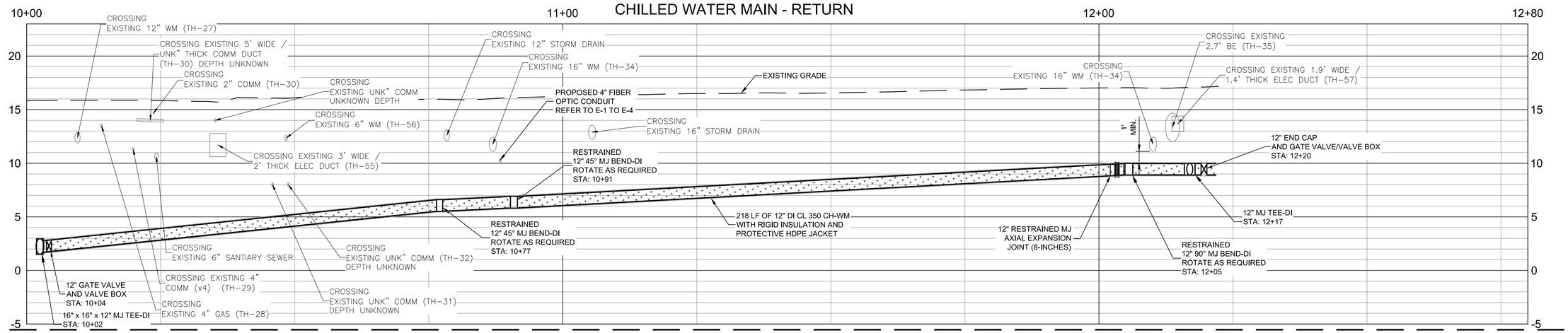

CHILLED WATER MAIN - SUPPLY

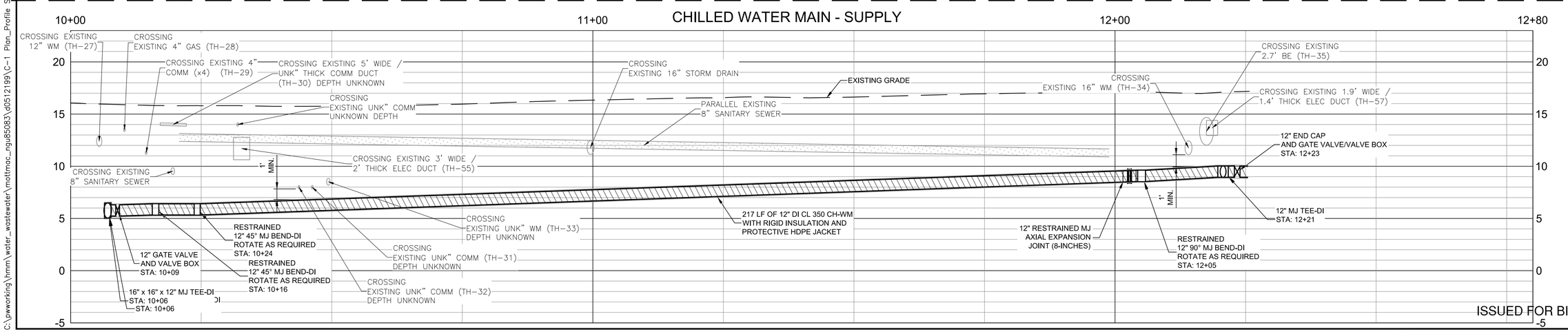

ISSUED FOR BID

MOTT MACDONALD
Mott MacDonald Florida, LLC
10245 Centurion Parkway North
Suite 100
Jacksonville, Florida 32256
Telephone: (904) 203-1090
Architects AA - C000003S
Engineers EB - 0000155
Surveyors LB - 0006783

NO.	BY	DATE	REVISIONS
5.			
4.			
3.			
2.			
1.			

DESIGN ENGINEER
BRUCE A. NEU
FLORIDA REGISTRATION NO. 51672

DESIGNER:	F. NGUYEN
DRAWN BY:	D. JACOBS
DATE:	OCT 2020
CHECKED BY:	P. MOURTT
DATE:	OCT 2020

JEA Building Community

DOWNTOWN CHILLED WATER MAINS AND FIBER OPTIC CONDUITS
DOWNTOWN CHILLED WATER MAINS - COJ BUILDING

PROJ. NO. 502100442-001
DATE: OCT 2020
SCALE: HORIZ. 1" = 10' VERT. 1" = 5'

NO. SHEETS 36
SHEET NO. 8
DRAWING NO. C-4

Thu Oct 22, 2020 – 11:43
Current Layout Tab = C-4
C:\pwworking\hmm\water_wastewater\mottmac_ngu85083\d0512199\C-1 Plan_Profile Sheets – CHM.dwg

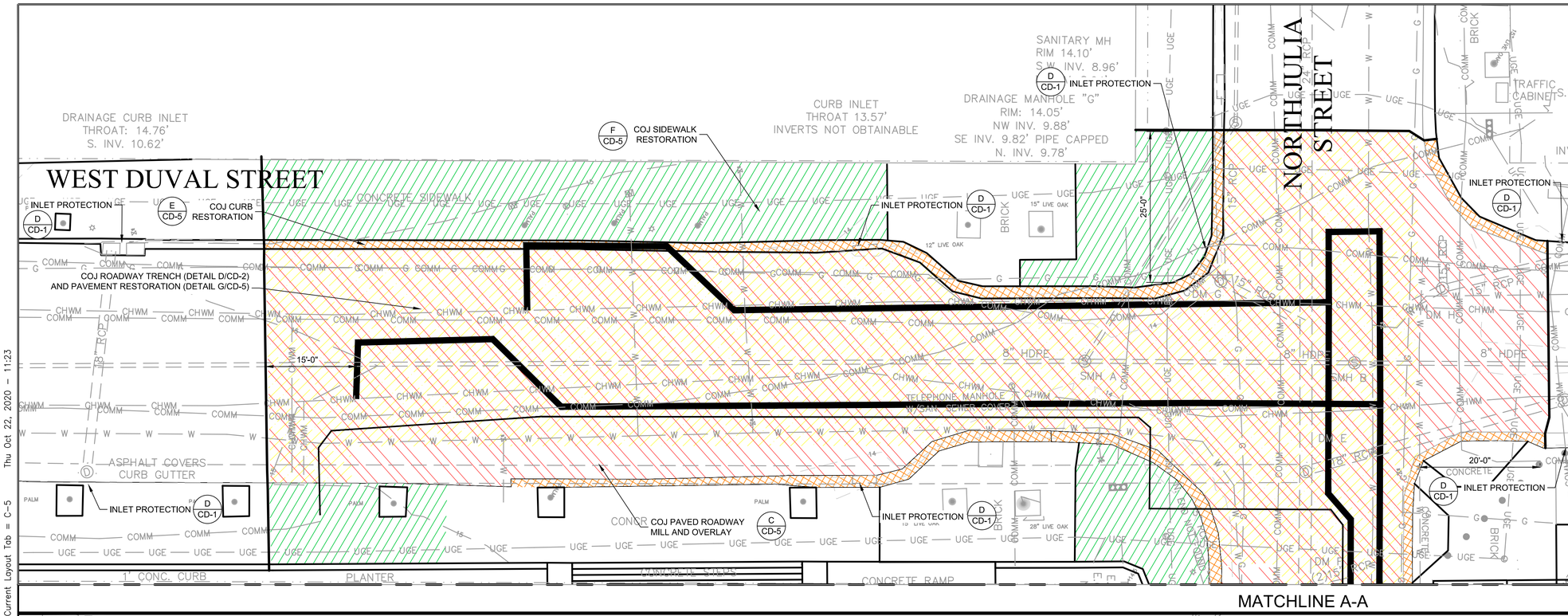

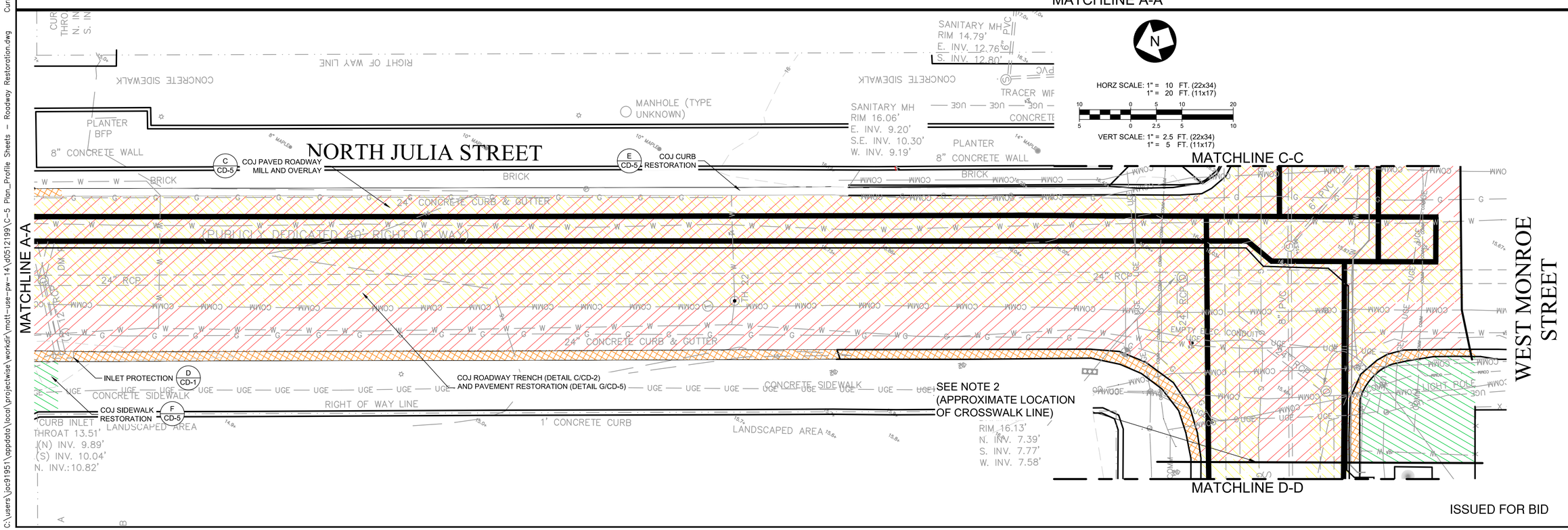

HORZ SCALE: 1" = 10 FT. (22x34)
1" = 20 FT. (11x17)

VERT SCALE: 1" = 2.5 FT. (22x34)
1" = 5 FT. (11x17)

NOTES:

1. THE CONTRACTOR SHALL NOTIFY THE CITY OF JACKSONVILLE TRAFFIC ENGINEER DIVISION 48 HOURS IN ADVANCE OF BEGINNING SIGNAL WORK TO OBSERVE INSTALLATIONS
   CONTACT: MIGUEL CAMACHO
   PHONE: 904-255-7549
   EMAIL: MCAMACHO@COJ.NET

2. CONTRACTOR SHALL COORDINATE FINAL PAVING WITHIN WEST MONROE STREET AND AT ITS INTERSECTION OF NORTH JULIA STREET WITH JEA AND RYAN COMPANIES.

LEGEND:

- COJ PAVED ROADWAY MILL AND OVERLAY BY CONTRACTOR
- COJ CURB RESTORATION BY CONTRACTOR
- COJ ROADWAY TRENCH AND PAVEMENT RESTORATION BY CONTRACTOR
- COJ SIDEWALK RESTORATION BY CONTRACTOR

ISSUED FOR BID

MOTT MACDONALD
Mott MacDonald Florida, LLC
12245 Centurion Parkway North
Suite 200
Jacksonville, Florida 32256
Telephone: (904) 205-1090
Architects AA - C0000035
Engineers EB - 0000155
Surveyors LB - 0006783

NO.	BY	DATE	REVISIONS
6.			
5.			
4.			
3.			
2.			
1.			

DESIGN ENGINEER
BRUCE A. NEU
FLORIDA REGISTRATION NO. 51672

DESIGNER:	F. NGUYEN
DRAWN BY:	D. JACOBS
DATE:	OCT 2020
CHECKED BY:	P. MOURTT
DATE:	OCT 2020

JEA Building Community

DOWNTOWN CHILLED WATER MAINS AND FIBER OPTIC CONDUITS
ROADWAY RESTORATION

PROJ. NO.	502100442-001
DATE:	OCT 2020
SCALE:	HORIZ: 1" = 10' VERT: 1" = 5'
NO. SHEETS	36
SHEET NO.	6
DRAWING NO.	C-5

C:\users\jac91951\appdata\local\projectwise\workdir\mott-use-pw-14\d0512199\C-5 Plan_Profile Sheets - Roadway Restoration.dwg Current Layout Tab = C-5 Thu Oct 22, 2020 - 11:23

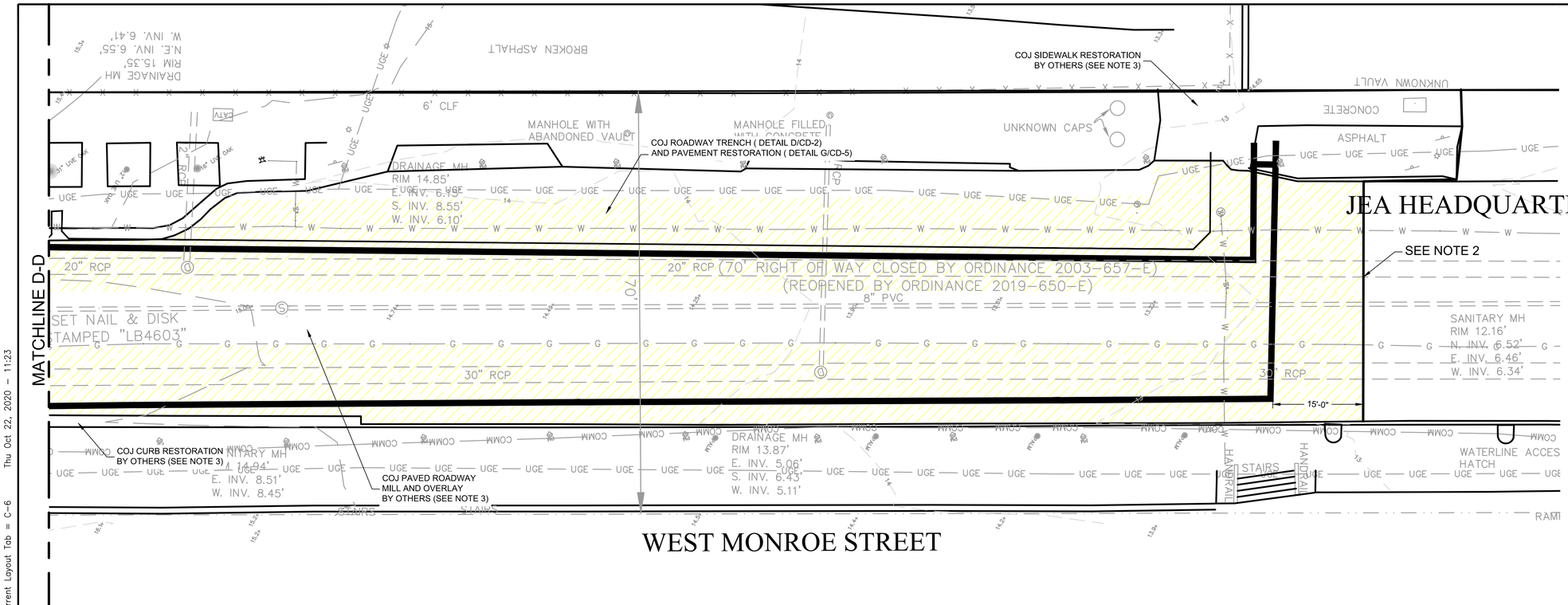

NOTES:

1. THE CONTRACTOR SHALL NOTIFY THE CITY OF JACKSONVILLE TRAFFIC ENGINEER DIVISION 48 HOURS IN ADVANCE OF BEGINNING SIGNAL WORK TO OBSERVE INSTALLATIONS
   CONTACT: MIGUEL CAMACHO
   PHONE: 904-255-7549
   EMAIL: MCAMACHO@COJ.NET

2. CONTRACTOR SHALL COORDINATE FINAL PAVING WITHIN WEST MONROE STREET AND AT ITS INTERSECTION OF NORTH JULIA STREET WITH JEA AND RYAN COMPANIES.

LEGEND:

- COJ PAVED ROADWAY MILL AND OVERLAY BY CONTRACTOR
- COJ CURB RESTORATION BY CONTRACTOR
- COJ ROADWAY TRENCH AND PAVEMENT RESTORATION BY CONTRACTOR
- COJ SIDEWALK RESTORATION BY CONTRACTOR

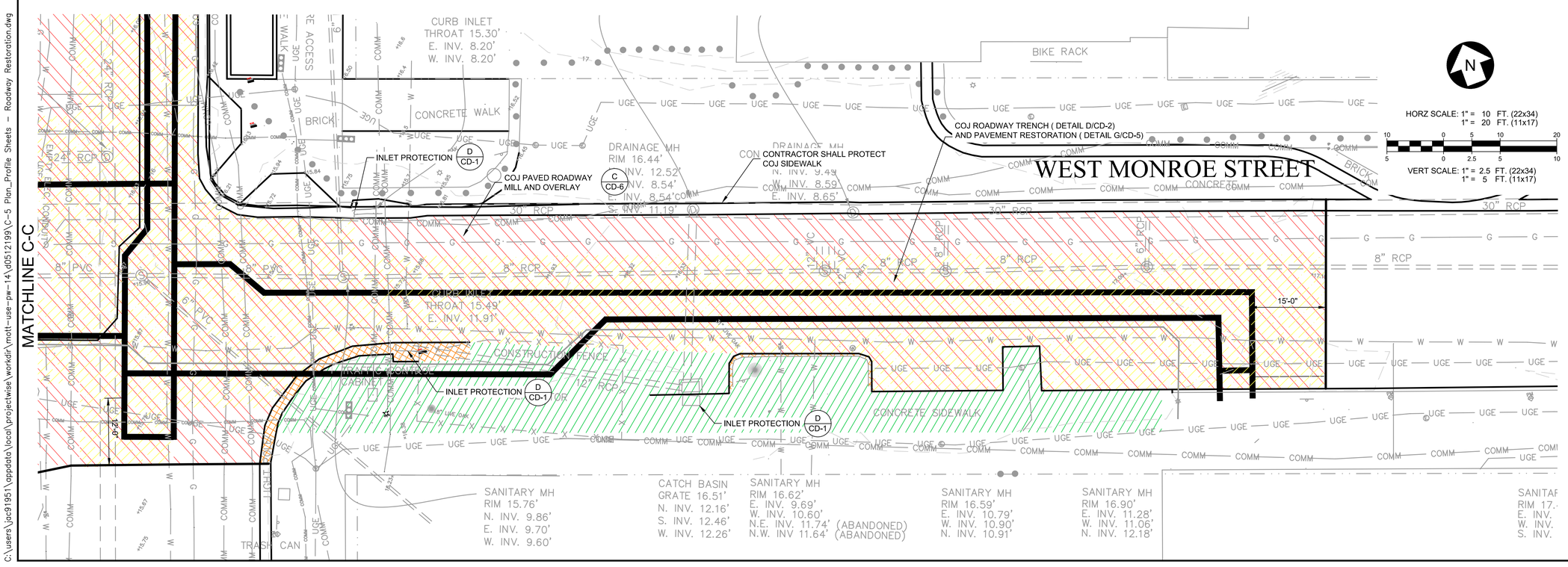

ISSUED FOR BID

MOTT MACDONALD
Mott MacDonald Florida, LLC
10245 Centurion Parkway North
Suite 300
Jacksonville, Florida 32256
Telephone: (904) 203-1090
Architects AA - C0000035
Engineers EB - 0000155
Surveyors LB - 0006783

NO.	BY	DATE	REVISIONS
6.			
5.			
4.			
3.			
2.			
1.			

DESIGN ENGINEER
BRUCE A. NEU
FLORIDA REGISTRATION NO. 51672

DESIGNER:	F. NGUYEN
DRAWN BY:	D. JACOBS
DATE:	OCT 2020
CHECKED BY:	P. MOURTT
DATE:	OCT 2020

JEA Building Community

DOWNTOWN CHILLED WATER MAINS AND FIBER OPTIC CONDUITS
ROADWAY RESTORATION

PROJ. NO.	502100442-001
DATE:	OCT 2020
SCALE:	HORIZ: 1" = 10' VERT: 1" = 5'

NO. SHEETS	36
SHEET NO.	
DRAWING NO.	C-6

C:\users\jac91951\appdata\local\projectwise\workdir\mott-use-pw-14\d0512199\C-5 Plan_Profile Sheets - Roadway Restoration.dwg Current Layout Tab = C-6 Thu Oct 22, 2020 - 11:23

GENERAL NOTES FOR SOIL EROSION, SEDIMENT CONTROL, AND TREE PROTECTION:

1. ALL EROSION AND SEDIMENT CONTROL PRACTICES TO BE INSTALLED PRIOR TO ANY MAJOR SOIL DISTURBANCE, OR IN THEIR PROPER SEQUENCE, AND MAINTAINED UNTIL PERMANENT PROTECTION IS ESTABLISHED.
2. ANY DISTURBED AREAS THAT WILL BE LEFT EXPOSED MORE THAN 30 DAYS, AND NOT SUBJECT TO CONSTRUCTION TRAFFIC, WILL IMMEDIATELY RECEIVE A TEMPORARY SEEDING. IF THE SEASON PREVENTS THE ESTABLISHMENT OF A TEMPORARY COVER, THE DISTURBED AREAS WILL BE MULCHED WITH STRAW, OR EQUIVALENT MATERIAL, AT A RATE OF TWO (2) TONS PER ACRE, ACCORDING TO STATE STANDARDS.
3. PERMANENT VEGETATION TO BE SEEDED OR SODDED ON ALL EXPOSED AREAS WITHIN TEN (10) DAYS AFTER GRADING. MULCH TO BE USED AS NECESSARY FOR PROTECTION UNTIL SEEDING IS ESTABLISHED.
4. ALL WORK AND MATERIALS TO BE IN ACCORDANCE WITH THE FDOT "STANDARD SPECIFICATIONS FOR ROAD AND BRIDGE CONSTRUCTION", 2020, SECTIONS 104, 570, 575 AND 980 TO 986.
5. UNFILTERED DEWATERING IS NOT PERMITTED. THE CONTRACTOR SHALL TAKE ALL NECESSARY PRECAUTIONS DURING ALL DEWATERING OPERATIONS TO MINIMIZE SEDIMENT TRANSFER.
6. SHOULD THE CONTROL OF DUST AT THE SITE BE NECESSARY, THE SITE WILL BE SPRINKLED UNTIL THE SURFACE IS WET, TEMPORARY VEGETATION COVER SHALL BE ESTABLISHED OR MULCH SHALL BE APPLIED IN ACCORDANCE WITH STATE STANDARDS FOR EROSION CONTROL.
7. ALL SOIL WASHED, DROPPED, SPILLED OR TRACKED OUTSIDE THE LIMIT OF DISTURBANCE OR ONTO PUBLIC RIGHTS-OF-WAY WILL BE REMOVED IMMEDIATELY.
8. ANY AREAS USED FOR THE CONTRACTOR'S STAGING, INCLUDING BUT NOT LIMITED TO, TEMPORARY STORAGE OF STOCKPILED MATERIALS (E.G. CRUSHED STONE, QUARRY PROCESS STONE, SELECT FILL, EXCAVATED MATERIALS, ETC.), SHALL BE ENTIRELY PROTECTED BY A SILT FENCE ALONG THE LOW ELEVATION SIDE TO CONTROL SEDIMENT RUNOFF.
9. ADDITIONAL SEDIMENT AND EROSION CONTROL MEASURES MAY BE REQUIRED, DURING ANY PHASE OF DEVELOPMENT, AT THE DISCRETION OF THE JEA APPOINTED CONSTRUCTION INSPECTOR.
10. THE EROSION AND SEDIMENTATION CONTROLS SHOWN ON THE PLANS ARE THE MINIMUM REQUIRED. ADDITIONAL SEDIMENT AND EROSION CONTROL MEASURES MAY BE REQUIRED, DURING ANY PHASE OF DEVELOPMENT, AT THE DISCRETION OF THE JEA APPOINTED CONSTRUCTION INSPECTOR.
11. THE CONTRACTOR SHALL ENSURE THAT A FOREMAN OR SUPERVISOR WHO HAS BEEN CERTIFIED UNDER FLORIDA STORMWATER, EROSION AND SEDIMENTATION CONTROL INSPECTOR TRAINING PROGRAM IS AVAILABLE IN PERSON OR BY PHONE AT ALL TIMES DURING THE CONSTRUCTION ACTIVITIES. THE CONTRACTOR SHALL DESIGNATE THAT PERSON OR PERSONS AT THE PRE-CONSTRUCTION MEETING AND THAT PERSON OR PERSONS MUST ATTEND THE PRE-CONSTRUCTION MEETING.
12. EROSION CONTROL MEASURES DEPICTED IN THE PLANS ARE LIMITED TO INLET PROTECTION AND SILT FENCES. THE INLET PROTECTION SHALL BE LIMITED TO INLETS WITHIN THE ACTIVE CONSTRUCTION LIMITS AND A MINIMUM OF TWO INLETS DOWNSTREAM OF THE ACTIVE CONSTRUCTION LIMITS. THE CONTRACTOR SHALL MONITOR THE EFFECTIVENESS OF SUCH INLET PROTECTION AND PROVIDE ADDITIONAL PROTECTION IF WARRANTED. NO SEDIMENTS ARE INTENDED TO ENTER THE CURB INLETS. THE CONTRACTOR SHALL CONDUCT AND MAINTAIN THE WORK IN SUCH CONDITION TO PROVIDE ADEQUATE DRAINAGE AT ALL TIMES AND SHALL MONITOR THE PERFORMANCE OF THE STORM WATER INLETS WHILE IMPEDED BY THE INLET PROTECTION. STREET FLOODING IS NOT TO BE INTRODUCED AS A RESULT OF THE INLET PROTECTION. SAFETY OF THE TRAVELING PUBLIC, AS RELATED TO THE ADEQUACY OF THE DRIVING SURFACE AS A RESULT OF STANDING STORMWATER RUNOFF CREATED BY THE INTRODUCTION OF INLET PROTECTION, IS THE RESPONSIBILITY OF THE CONTRACTOR.
13. IT IS THE CONTRACTOR'S RESPONSIBILITY TO MAINTAIN A CLEAN WORK ZONE TO LIMIT THE RELEASE OF SEDIMENTS INTO STORMWATER COLLECTION SYSTEMS AND TO LIMIT THE TRACKING OF MATERIALS BEYOND THE ACTIVE WORK LIMITS. THE CONTRACTOR IS REQUIRED TO MECHANICALLY SWEEP THE ACTIVE CONSTRUCTION LIMITS TO REMOVE SEDIMENTS AND LIKE MATERIALS FROM THE CORRIDOR AT THE END OF EACH WORKDAY. ADDITIONAL OR MORE FREQUENT SWEEPING MAY BE REQUIRED BY THE JEA APPOINTED CONSTRUCTION INSPECTOR.
14. THE CONTRACTOR IS RESPONSIBLE FOR THE PROTECTION OF ALL TREES AND LANDSCAPING ON ADJACENT PROPERTIES, AND WILL BE SOLELY LIABLE FOR DAMAGE TO VEGETATION ON PROPERTIES ADJACENT TO CONSTRUCTION WORK ZONES. ALL TREES WITHIN THE LIMITS OF CONSTRUCTION ARE TO BE PROTECTED UNLESS SPECIFICALLY IDENTIFIED ON THE PLANS TO BE REMOVED. ALL TRESS OUTSIDE THE CONSTRUCTION WORK ZONE ARE TO BE PROTECTED TO THE MAXIMUM EXTENT PRACTICABLE. TREE BARRICADES WILL BE INSTALLED AND MAINTAINED AROUND ALL TREES TO BE PROTECTED OR AS DIRECTED BY THE ENGINEER/JEA APPOINTED CONSTRUCTION INSPECTOR. THE CONTRACTOR SHALL EMPLOY A CERTIFIED ARBORIST TO MITIGATE IMPACTS TO TREES AS A RESULT OF CONSTRUCTION ACTIVITIES AND SHALL COORDINATE THESE TREE-RELATED ISSUES WITH THE JEA APPOINTED CONSTRUCTION INSPECTOR. NO TRENCHING OR EXCAVATION SHALL BE ALLOWED WITHIN THE CRITICAL PROTECTION ZONE OF ANY PROTECTED TREE, EXCEPT WHERE DEBITS HAVE BEEN NOTED ON THE PLANS OR MITIGATION HAS BEEN PERFORMED. ANY TREE-RELATED DAMAGE DUE TO CONSTRUCTION SHALL BE PAID BY THE CONTRACTOR.
15. ALL DISTURBED AREAS, EXCEPT FOR AREAS THAT ARE LANDSCAPED, PAVED, OR OTHERWISE DESIGNATED, ARE TO BE SODDED. EXISTING GRASSED AREAS THAT ARE DISTURBED WILL BE SODDED WITH THE SAME GRASS TYPE AS EXISTING, UNLESS OTHERWISE DIRECTED BY THE ENGINEER. CENTIPEDE SOD WILL BE USED FOR ALL DISTURBED AREAS NOT CURRENTLY GRASSED. WHERE SOD IS PLACED ON SLOPES OF 2:1 OR STEEPER, AN EROSION MAT WILL BE INSTALLED BENEATH THE SOD, AND THE SOD WILL BE STAKED. AREAS THAT ARE SODDED SHALL BE FERTILIZED AT AN APPLICATION RATE OF 450 LBS. /AC AND WILL BE WATERED AT A RATE OF 5,000 GAL/AC. NO SEPARATE PAYMENT WILL BE MADE AND ALL COSTS FOR FERTILIZING, WATERING, STAKING, AND FURNISHING AND INSTALLING EROSION MAT SHALL BE CONSIDERED INCIDENTAL TO OTHER PAY ITEMS IN THE CONTRACT.
16. A DEWATERING PLAN IS REQUIRED AND SHALL DETAIL THE MEASURES TO BE EMPLOYED TO LOWER THE GROUNDWATER TABLE AND/OR TO DIVERT SURFACE WATER DURING EXCAVATION AND CONSTRUCTION INCLUDING THE INSTALLATION AND MAINTENANCE OF ALL DEVICES TO BE USED DURING EACH PHASE OF CONSTRUCTION TO CONTROL EROSION AND THE TRANSPORTATION OF ERODED MATERIALS OFF SITE. TRENCH SHEETING AND BRACING SHALL BE ADEQUATE TO PREVENT CAVE-IN OF TRENCH WALLS, SUBSIDENCE OF AREAS ADJACENT TO THE TRENCH, DAMAGE TO UTILITIES, AND SLOUGHING OF THE BASE OF THE EXCAVATION DUE TO WATER SEEPAGE. IT IS THE CONTRACTORS RESPONSIBILITY TO ENSURE THAT ALL DEWATERING ACTIVITIES ADHERE TO ALL LOCAL, STATE AND FEDERAL REGULATIONS . IT IS THE CONTRACTORS RESPONSIBILITY FOR THE ADEQUACY OF ANY SHEETING AND BRACING. THE COST OF DEWATERING, SHEETING AND BRACING IS CONSIDERED INCIDENTAL TO THE PAY ITEMS IN THE CONTRACT. NO SEPARATE PAYMENT WILL BE MADE FOR THIS WORK.
17. PAYMENT FOR PREPARING AND SUBMITTING THE DEWATERING PLAN IS CONSIDERED INCIDENTAL TO THE PAY ITEMS IN THE CONTRACT. NO SEPARATE PAYMENT WILL BE MADE FOR THIS WORK.

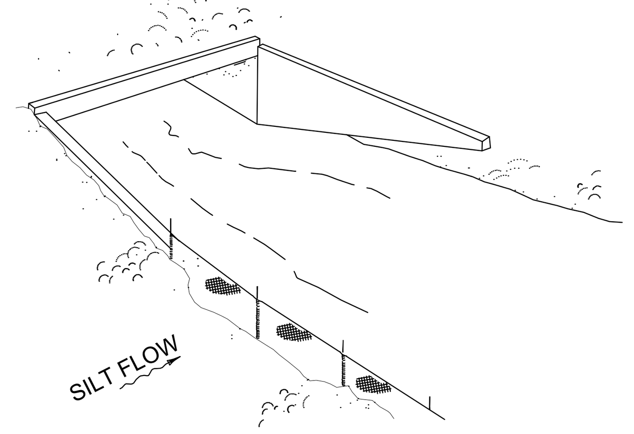

TYPE III SILT FENCE

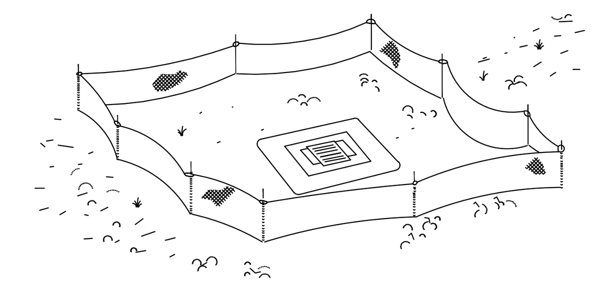

TYPE III SILT FENCE PROTECTION AROUND DITCH BOTTOM INLETS

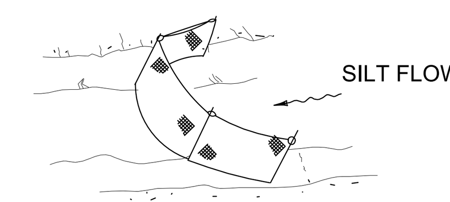

TYPE III SILT FENCE

A SILT FENCE APPLICATIONS
- NTS

DO NOT DEPLOY IN A MANNER THAT SILT FENCES WILL ACT AS A DAM ACROSS PERMANENT FLOWING WATERCOURSES. SILT FENCES ARE TO BE USED AT UPLAND LOCATIONS AND TURBIDITY BARRIERS USED AT PERMANENT BODIES OF WATER.

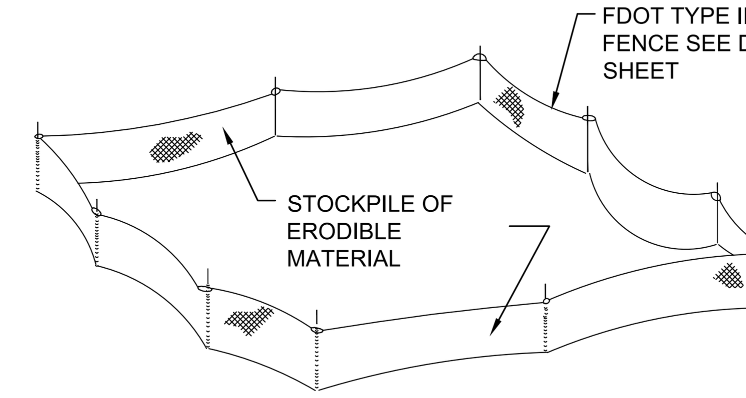

NOTE:
THE STORAGE OF ALL MATERIAL SHALL BE OUTSIDE THE 100-YEAR FLOOD PLAIN.

B MATERIAL STOCKPILE DETAIL
- NTS

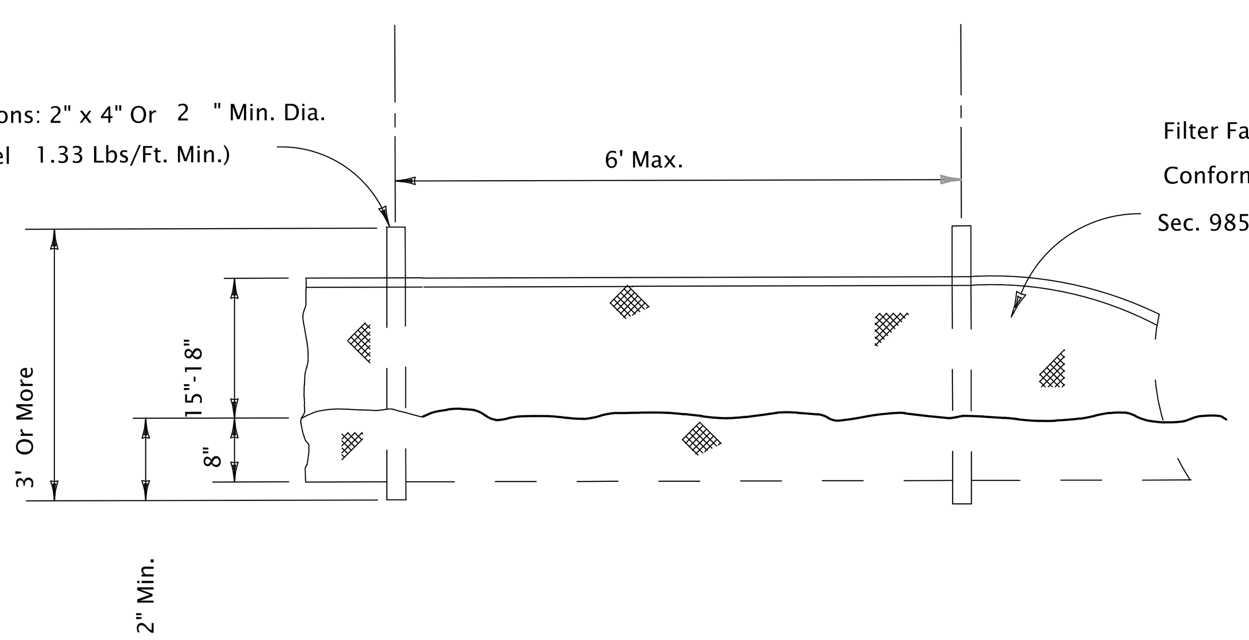

LONGITUDINAL SECTION

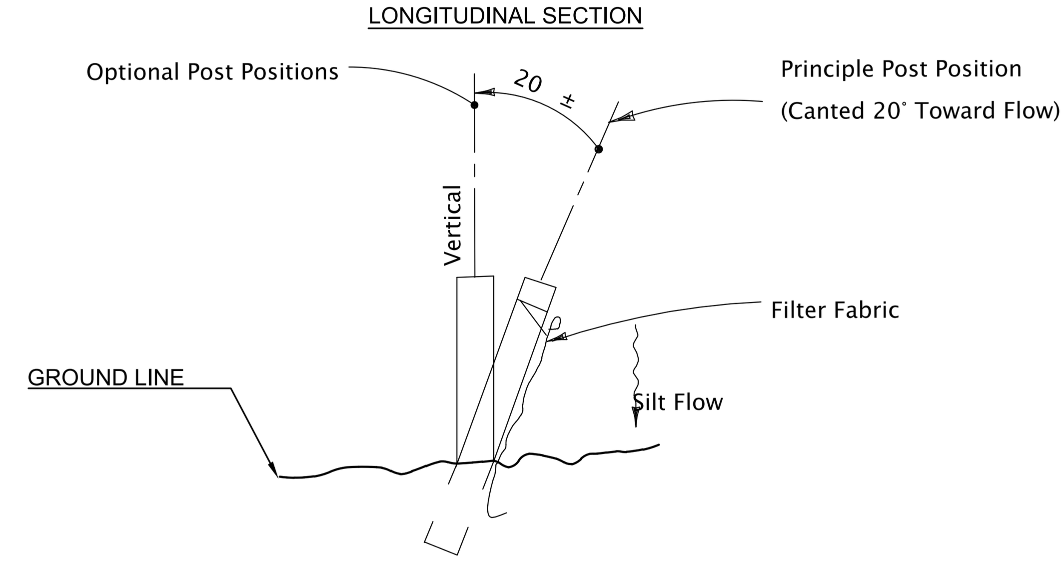

CROSS SECTION

C TYPE III SILT FENCE
- NTS

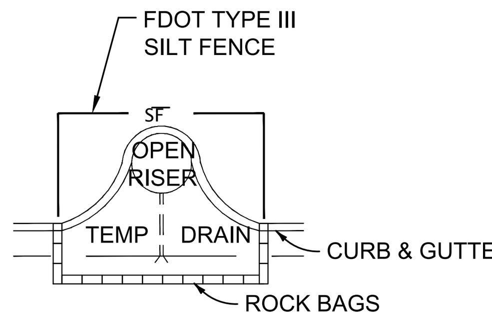

PARTIAL INLET

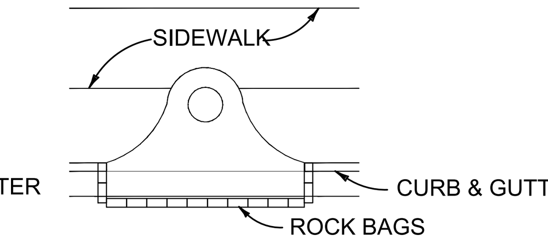

COMPLETED INLET

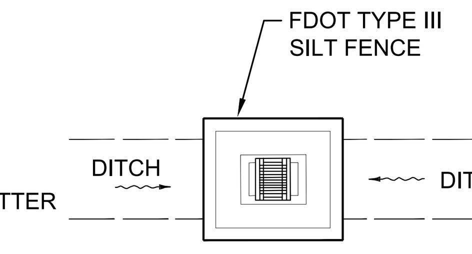

DITCH BOTTOM INLET

D INLET PROTECTION
- NTS

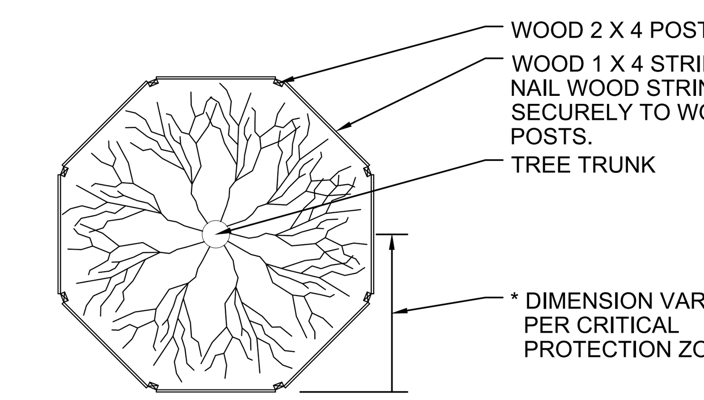

NOTE: FOR GROUPS OF TREES, PLACE BARRICADES BETWEEN TREES AND CONSTRUCTION ACTIVITY.

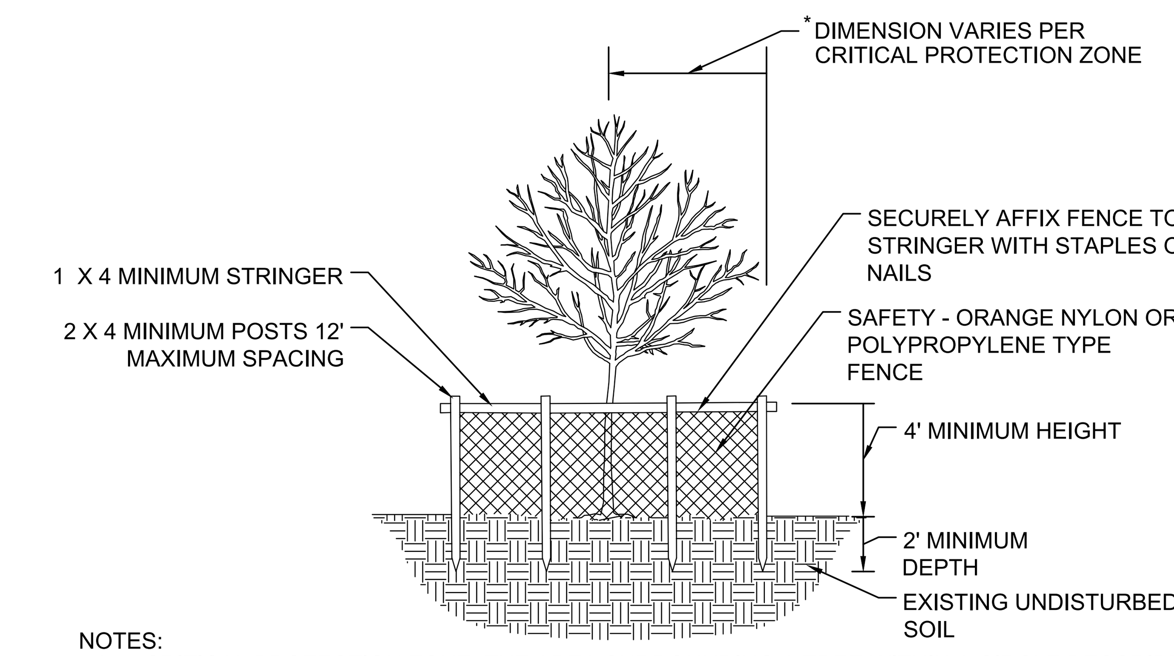

NOTES:
1. CRITICAL PROTECTION ZONE: THE AREA SURROUNDING A TREE WITHIN A CIRCLE DESCRIBED BY A RADIUS OF ONE FOOT FOR EACH INCH OF THE TREE TRUNK DIAMETER AT 54" ABOVE FINISHED GRADE. FOR GROUPS OF TREES, PLACE BARRICADES BETWEEN TREES AND CONSTRUCTION ACTIVITY.
2. TREE PROTECTION BARRICADES SHALL BE LOCATED TO PROTECT A MINIMUM OF 75% OF THE CRITICAL PROTECTION ZONE.

E TREE PROTECTION
- NTS

PURSUANT TO A.A.N. STANDARDS CALIPER MEASUREMENTS SHALL BE MADE 6 INCHES ABOVE GROUND LEVEL (ROOTBALL) UP TO AND INCLUDING 4 INCH CALIPER; 12 INCHES ABOVE GROUND LEVEL FOR LARGER SIZES.

("DUCKBILL" GUYING SYSTEM IS AN ACCEPTABLE ALTERNATIVE TO BELOW)

PLANT SO THAT TOP OF ROOT BALL IS EVEN WITH THE FINISHED GRADE

FLAG GUYING WIRES WITH SAFETY ORANGE COLORED SURVEYOR'S FLAGGING TAPE

MAINTAIN GUYING & SAFETY FLAGS FOR ONE YEAR; THEN REMOVE

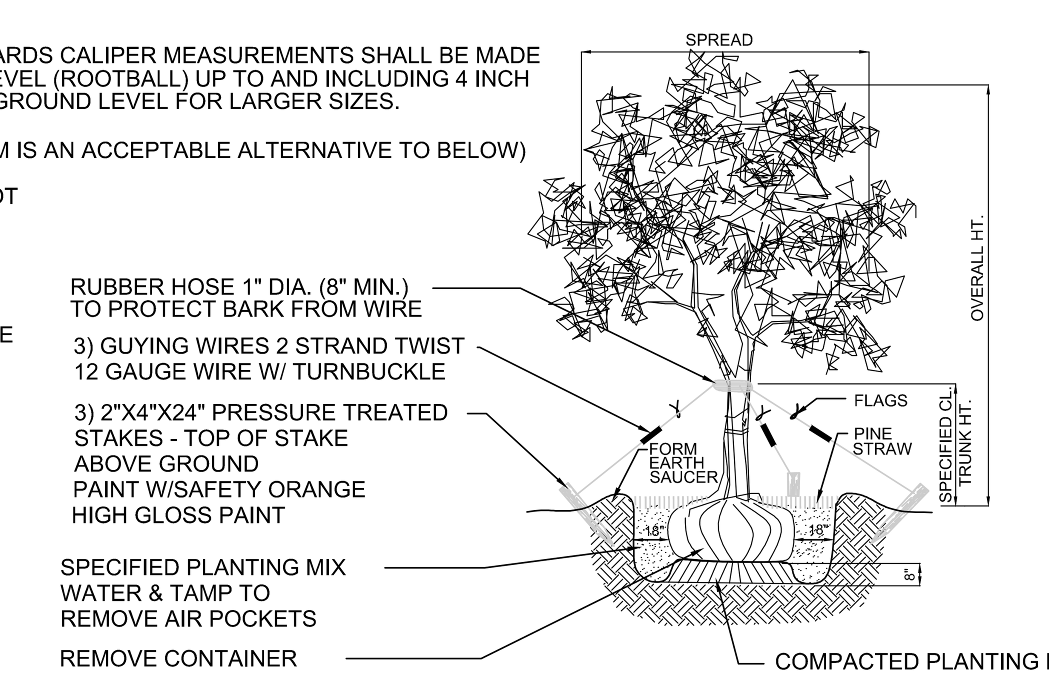

TREE TRUNK DIAMETER	SETUP (SINGLE/DOUBLE)	WATER CAPACITY (PER BAG)	FILLS REQ'D PER WEEK
2 TO 3 INCH	SINGLE BAG	14.5 GALLONS	2 FILLS PER WEEK
4 TO 5 INCH	DOUBLE BAG	23.5 GALLONS	1 FILL PER WEEK

F TREE PLANTING
- NTS

ISSUED FOR BID

Mott MacDonald Florida, LLC
10245 Centurion Parkway North
Suite 320
Jacksonville, Florida 32256
Telephone: (904) 203-1090
Architects AA - C0000035
Engineers EB - 0000155
Surveyors LB - 0006783
MOTT MACDONALD

NO.	REVISIONS	BY	DATE
6.			
5.			
4.			
3.			
2.			
1.			

DESIGN ENGINEER: BRUCE A. NEU
FLORIDA REGISTRATION NO. 51672

DESIGNER: F. NGUYEN
DRAWN BY: D. JACOBS
DATE: OCT 2020
CHECKED BY: P. MOURT
DATE: OCT 2020

JEA Building Community

DOWNTOWN CHILLED WATER MAINS AND FIBER OPTIC CONDUITS
STANDARD CIVIL DETAILS

PROJ. NO. 502100442-001
DATE: OCT 2020
SCALE: AS NOTED

NO. SHEETS 36
SHEET NO. 11
DRAWING NO. CD-1

C:\users\jac91951\appdata\local\projectwise\workdir\mott-use-pw-14\d0512199\CD-1 CHM.dwg Current Layout Tab = Layout1 Wed Oct 21, 2020 - 09:19
Xrefs Attached= JEA_SHT22x34_BOR WM [..\d0512226\JEA_SHT22x34_BOR CHM.dwg]

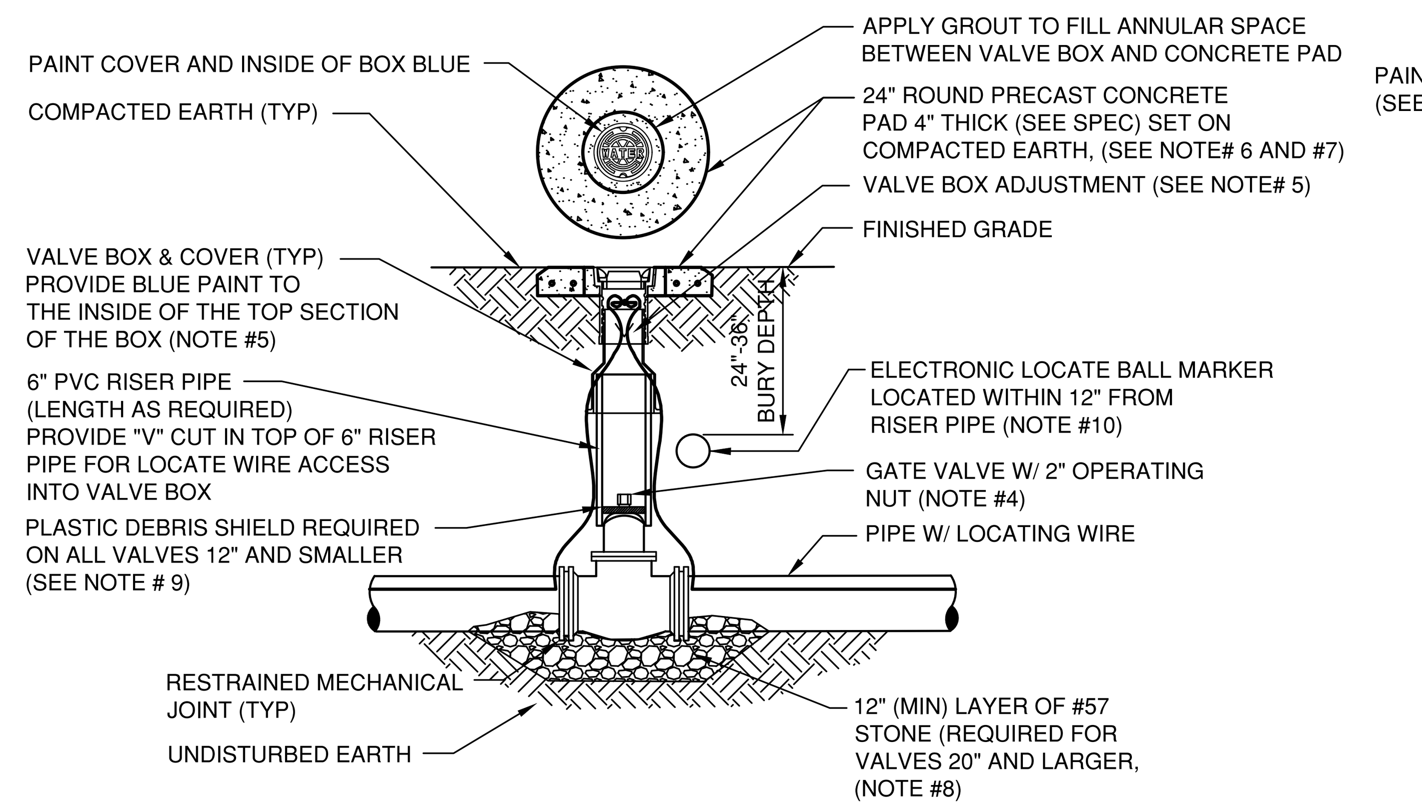

NOTES:

1. FOR UNPAVED LOCATIONS, A PRECAST CONCRETE VALVE PAD SHALL BE PROVIDED AND INSTALLED FLUSH WITH GRADE. CONCRETE PAD IS NOT REQUIRED FOR VALVE LOCATED IN THE ROADWAY, UNLESS SHOWN OR NOTED OTHERWISE.
2. LOCATING WIRE IS REQUIRED ON ALL PRESSURE PIPING (SEE DETAILW-44).
3. A "V" CUT SHALL BE CARVED IN THE CURB CLOSEST/ADJACENT/(ASPHALT IF NO CURB) TO ALL BELOW GRADE VALVES. THE "V" CUT IS TO BE PAINTED BLUE WATER/PURPLE RECLAIMED.
4. IN PAVED AREAS, INSTALL VALVE AT A DEPTH TO ALLOW A 12" MIN. DISTANCE BETWEEN THE VALVE COVER PLATE AND THE TOP OF THE VALVE OPERATING NUT. OUTSIDE OF PAVED AREAS (GRASS), INSTALL VALVE AT A DEPTH TO ALLOW A 6" MINIMUM DISTANCE BETWEEN THE VALVE COVER AND THE TOP OF THE VALVE OPERATING NUT. OPERATING NUT/STEM EXTENSION SHALL BE PROVIDED (WHERE APPLICABLE) SO THAT THE OPERATING NUT WILL BE NO MORE THAN 30 INCHES BELOW FINISHED GRADE.
5. FOR NEW CONSTRUCTION, THE VALVE BOX SHALL BE ADJUSTED TO MIDRANGE TO ALLOW FOR FUTURE BOX ADJUSTMENTS. ROUTE LOCATE WIRES THRU A "V" CUT IN THE TOP OF THE 6" PVC RISER PIPE FOR LOCATE WIRE ACCESS INTO VALVE BOX. THE LOCATE WIRES WITH A 24" LONG PIG-TAIL AT THE TOP SHALL BE CONNECTED TOGETHER WITH A WIRE NUT.
6. BRASS IDENTIFICATION TAG INDICATING "WATER", VALVE SIZE, DIRECTION AND TURNS TO OPEN & VALVE TYPE. PROVIDE A ¼" HOLE IN BRASS TAG AND ATTACH TAG (TWIST WIRE AROUND TAG) TO THE END OF THE LOCATE WIRE. TAGS ARE NOT REQUIRED ON VALVES INSTALLED ON FIRE HYDRANT BRANCH LINES.
7. IN LIEU OF PRECAST CONCRETE PAD, A 6" THICK X 24" (ROUND OR SQUARE) POURED CONCRETE PAD W/2 - #4 REBAR AROUND PERIMETER, MAY BE USED.
8. GRAVEL SHALL BE PROVIDED UNDER ALL VALVES 20" AND LARGER. THE MINIMUM VERTICAL LIMIT OF GRAVEL IS 12" UNDER THE VALVE UP TO ⅓ THE OVERALL HEIGHT OF THE VALVE.
9. FOR VALVES 12 INCH AND SMALLER, PROVIDE A WHITE OR BLACK PLASTIC DEBRIS SHIELD WHICH INSTALLS BELOW THE OPERATING NUT. THIS SHIELD SHALL CENTER THE RISER PIPE BOX OVER THE OPERATING NUT AND MINIMIZE INFILTRATION. SHIELD SHALL BE BY AFC, BOXLOK OR APPROVED EQUAL.
10. ALL VALVES SHALL BE INSTALLED WITH AN ELECTRIC LOCATE MARKER. MARKER SHALL BE 4" DIA. COLOR CODED BALL MARKER (3M-1403XR FOR WATER AND 1408XR FOR RECLAIMED WATER).

A - WATER VALVE INSTALLATION DETAIL
NTS
JANUARY 2020
PLATE W-18

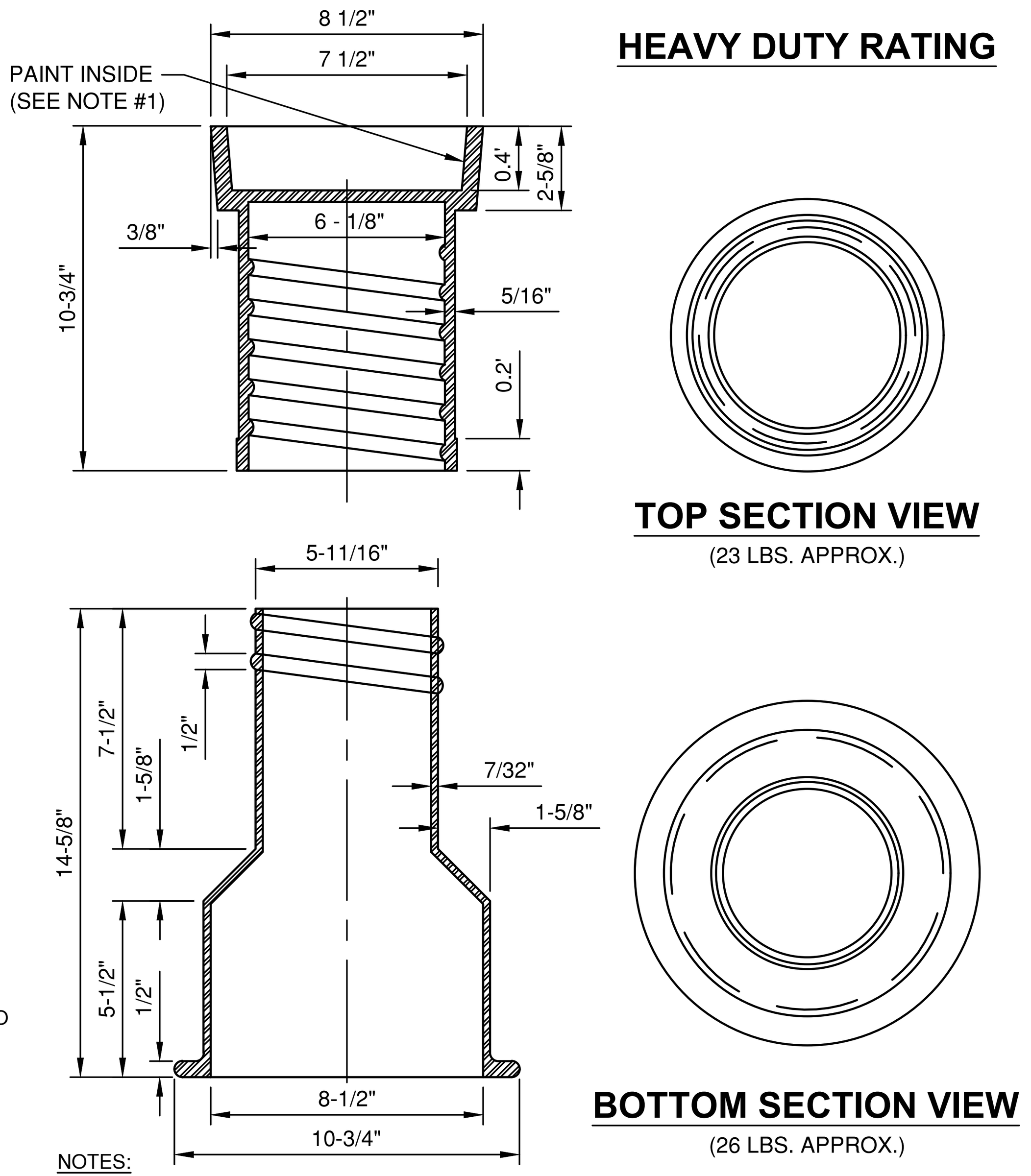

TOP SECTION VIEW
(23 LBS. APPROX.)

BOTTOM SECTION VIEW
(26 LBS. APPROX.)

NOTES:

1. PAINT THE INSIDE OF THE TOP SECTION OF THE BOX WITH APPLICABLE COLOR (BLUE OR PURPLE)
2. HEAVY DUTY RATING (TOTAL WEIGHT APPROX. 50 LBS.).
3. REFERENCE SECTION 351, PARAGRAPH X.2.

B - WATER SYSTEM VALVE BOX
NTS
JANUARY 2020
PLATE W-17

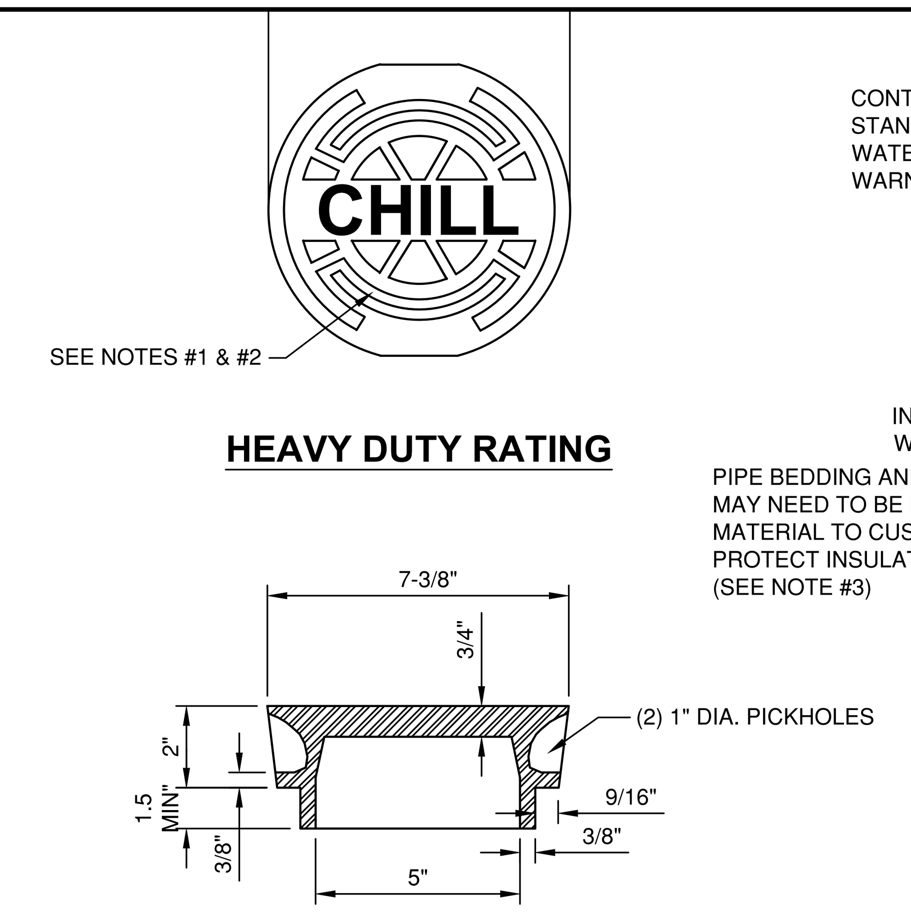

NOTES:

1. PAINT TOP OF THE COVER WITH ENAMEL PAINT (BLUE COLOR) FOR WATER.
2. FOR "REUSE" PAINT TOP PANTONE PURPLE.
3. LID WEIGHT: APPROX. 12 LBS.

C - WATER SYSTEM VALVE BOX COVER
NTS
JANUARY 2020
PLATE W-16

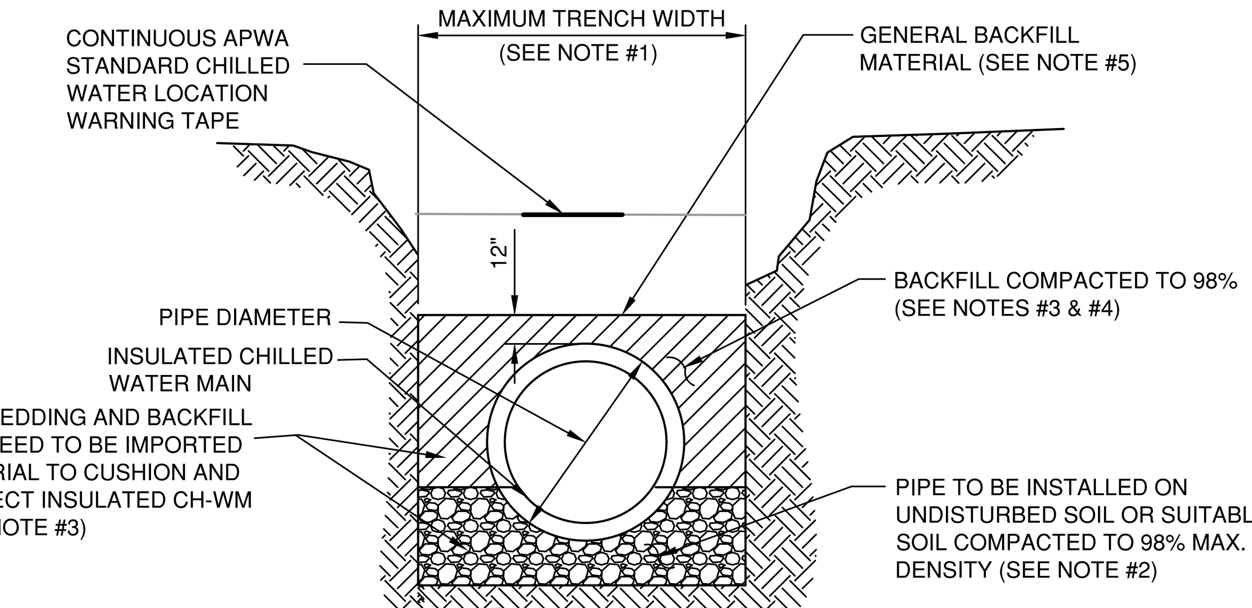

TYPICAL TRENCH

NOTES:

1. TRENCH SIDES SHALL BE APPROXIMATELY VERTICAL BETWEEN AN ELEVATION OF 1 FOOT ABOVE THE TOP OF THE PIPE AND THE CENTER LINE OF THE PIPE; OTHERWISE, TRENCH SIDES SHALL BE AS VERTICAL AS POSSIBLE OR AS REQUIRED BY OSHA STANDARDS. REFER TO THE MEASUREMENT AND PAYMENT SECTION (SECTION #801, PARAGRAPH #4)) TO DETERMINE MAXIMUM PAYLINE WIDTHS.
2. BELL HOLE SHALL BE DUG TO PERMIT THE ENTIRE STRAIGHT BARREL OF THE PIPE TO REST ON THE UNDISTURBED TRENCH BOTTOM. BOULDERS OR LOOSE ROCKS LARGER THAN 3/4 INCH IN SIZE WILL NOT BE PERMITTED IN BACKFILL UP TO 1 FOOT ABOVE THE TOP OF THE PIPE.
3. BACK FILL MATERIAL UP TO A LEVEL OF 1 FOOT OVER THE PIPE SHALL CONSIST OF AASHTO CLASS A-3 SOIL (SUITABLE SOIL) AND SHALL EXCLUDE CLAY MATERIALS AND LOOSE ROCKS LARGER THAN 3/4 INCH SIZE. REFER TO SECTIONS 5.2, 6.3 & 6.4 OF MAE REPORT 0103-0020.
4. BACKFILL MATERIAL UP TO A LEVEL 1 FOOT OVER THE TOP OF PIPE OR BOTTOM OF STRUCTURES SHALL BE PLACED IN 6 INCH COMPACTED THICKNESS LAYERS AND SHALL BE COMPACTED TO 98% OF IT'S MAXIMUM DENSITY AS DETERMINED BY THE LABORATORY MODIFIED PROCTOR TEST, ASTM D1557.
5. SEE " EXCAVATION AND EARTHWORK", SECTION 408 FOR ADDITIONAL REQUIREMENTS INCLUDING REMOVAL AND REPLACEMENT OF UNSUITABLE SOILS, DEWATERING, COMPACTION REQUIREMENTS AND DENSITY TESTING OF COMPACTED SOILS.

D - OPEN CUT TRENCH FOR PRESSURE PIPE
NTS
JANUARY 2020
(MODIFIED FOR PROJECT)
PLATE W-42

A LOCATE WIRE SHALL BE PLACED ON SERVICES 10FT OR GREATER.

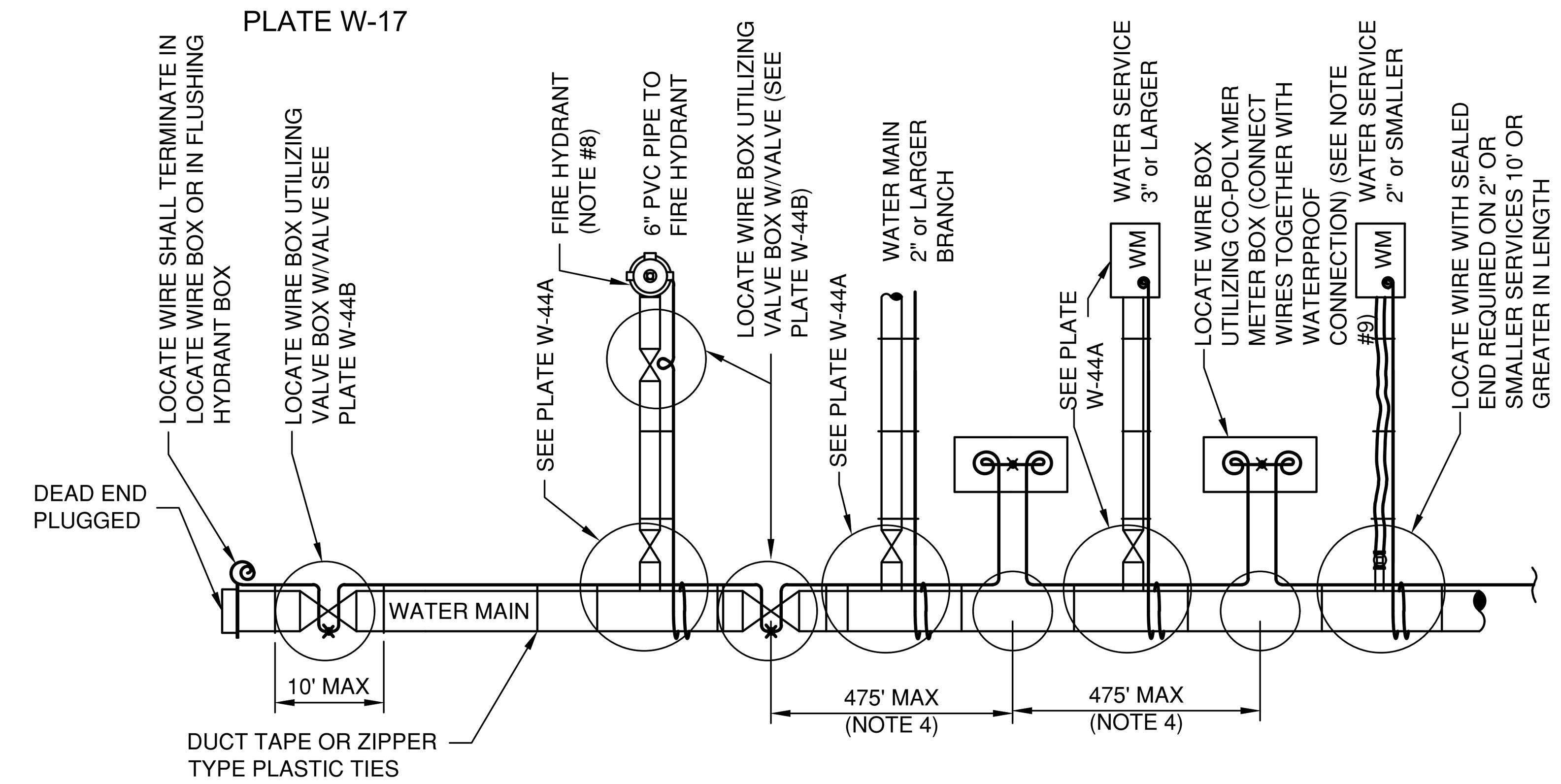

LOCATE WIRE SYSTEM

NOTES:

1. LOCATING WIRE TO BE INSTALLED IN EITHER THE ONE OR ELEVEN O'CLOCK POSITION ON ALL DUCTILE IRON 0R PVC (PRESSURE MAINS). LOCATE WIRE SHALL ALSO BE INSTALLED ON ALL (HDPE) POLY MAIN PIPING (1:00 OR 11:00 POSITION, IF POSSIBLE).
2. SECURE LOCATING WIRE TO PVC & D.I.P. WATER MAIN BY USE OF DUCT TAPE OR ZIPPER TYPE PLASTIC TIE STRAPS SPACED AT A MAXIMUM DISTANCE OF TEN (10') AND AT EACH SIDE OF BELL JOINT OR FITTING. COORDINATE WITH JEA AS TO A TRACER WIRE COLOR FOR CHILLED WATER.
3. THE ENTIRE LOCATING SYSTEM SHALL BE SUBJECTED TO TESTING TO DETERMINE ITS RELIABILITY. WHERE INSTALLED UNDER PAVEMENT AREAS, TESTING SHALL BE DONE PRIOR TO THE PLACEMENT OF PAVEMENT, UNLESS APPROVED OTHERWISE BY JEA.
4. LOCATING WIRE SHALL TERMINATE WITHIN AN ACTIVE VALVE BOX (WITH A VALVE) OR A METER BOX (IF NO VALVE) AT 475' INTERVALS. SEE DETAIL PLATE W-44B. WIRE CONNECTIONS BELOW GROUND (OUTSIDE OF A BOX) SHALL BE AVOIDED.
5. REFER TO SECTION 350 FOR LOCATE WIRE SPECIFICATIONS.
6. "✱" INDICATES THAT THE WIRES ARE CONNECTED TOGETHER WITH A WATERPROOF CONNECTION. (SEE DETAIL C/CD-2)
7. "@" INDICATES A WIRE PIG-TAIL (4' LONG)
8. FOR FIRE HYDRANT LOCATE WIRE REQUIREMENTS AND EXCLUSIONS, SEE PLATES W-12,13 AND 14.
9. AN "LW" CUT SHALL BE CARVED IN THE CONCRETE CURB AND PAINTED AT ALL LOCATE WIRE BOXES.
10. FOUR LANES OF TRAFFIC (HAVING TWO LANES OF TRAFFIC IN EACH DIRECTION) OR GREATER THE LOCATE WIRE AND VALVE BOX SHALL BE OFF-SET TO THE RIGHT-OF-WAY.

F - LOCATE WIRE CONSTRUCTION FOR WATER MAINS
NTS
JANUARY 2020
PLATE W-44

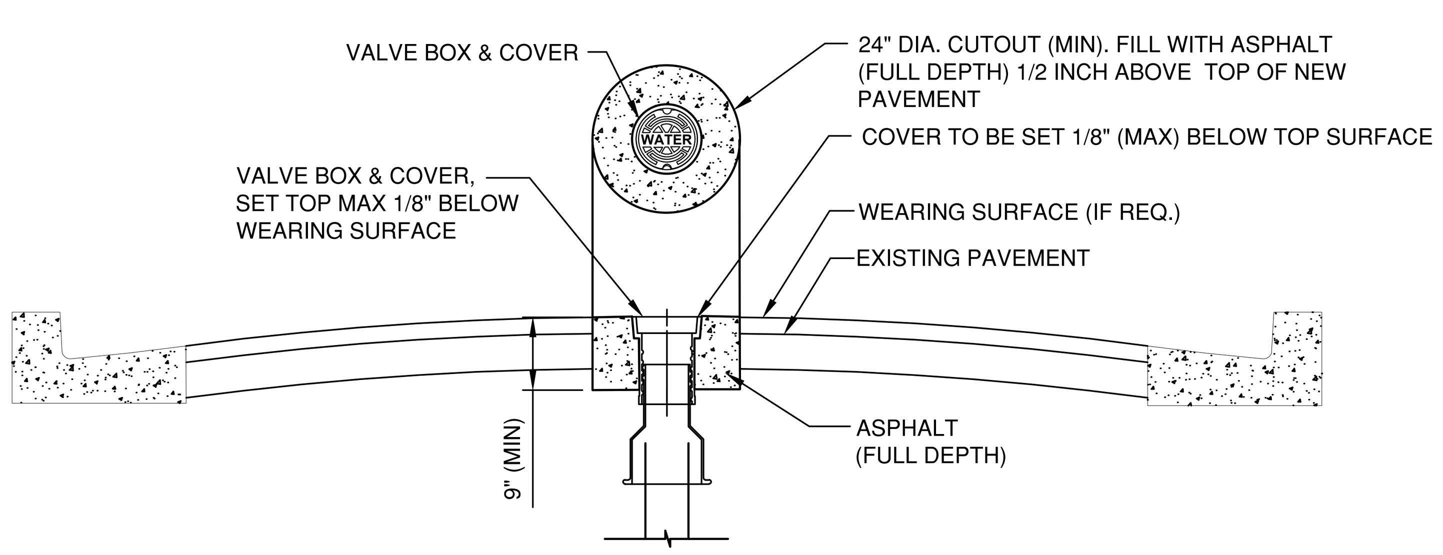

NOTES :

1. PROVIDE FULL DEPTH ASPHALT 1/2 INCH ABOVE TOP OF NEW PAVEMENT LEVEL, TO ALLOW FOR FUTURE ASPHALT MATERIAL COMPACTION. PLACE AND COMPACT ASPHALT IN 2" (MAX) LIFTS.

E - WATER VALVE JACKET ADJUSTED TO ROADWAY AFTER RE-SURFACING
NTS
JANUARY 2020
PLATE W-19

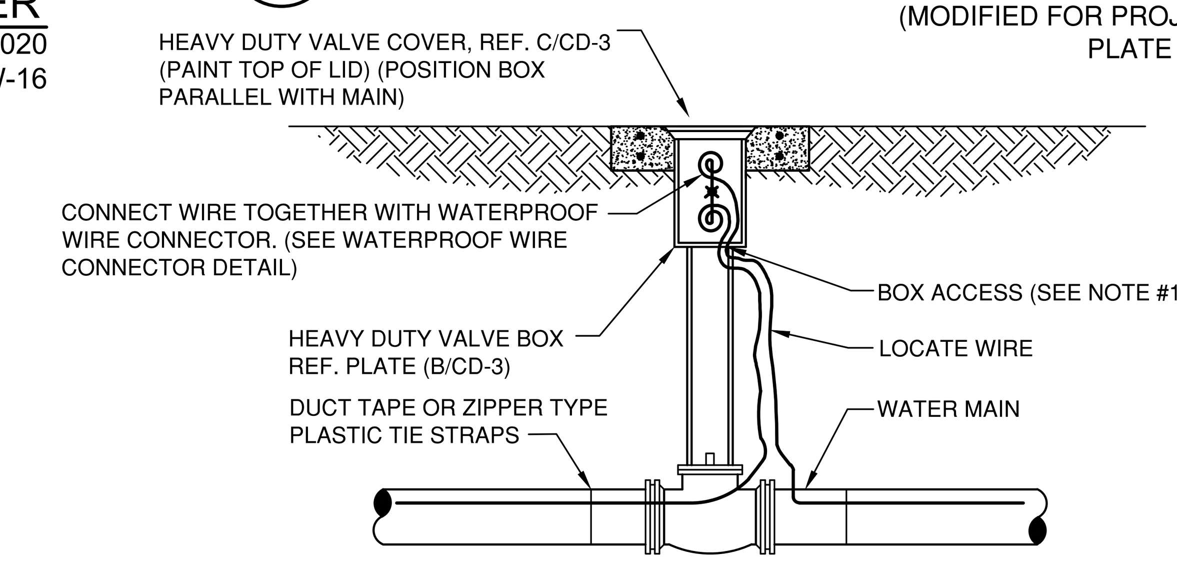

LOCATE WIRE BOX UTILIZING VALVE BOX

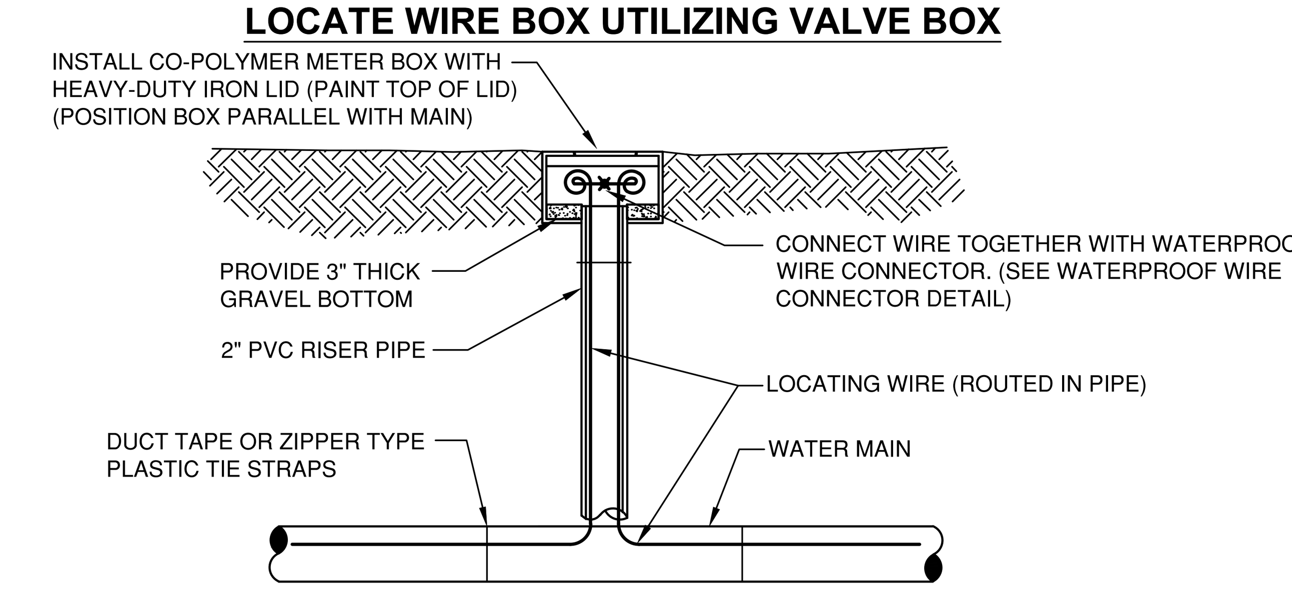

LOCATE WIRE BOX UTILIZING METER BOX

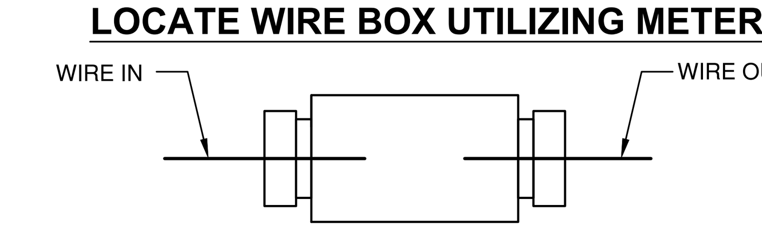

WATERPROOF WIRE CONNECTOR DETAIL

NOTES:

1. LOCATE WIRE SHALL ENTER THE VALVE BOX THROUGH A "V" CUT IN THE 6" PVC RISER PIPE (SEE A/CD-3).
2. LOCATE WIRE SHALL HAVE ENOUGH SLACK TO REACH 4' ABOVE FINAL GRADE AND LOCATE POINTS.
3. LOCATE WIRE CONNECTION SHALL ONLY BE A 2 WAY CONNECTION.

G - LOCATE WIRE BOX
NTS
JANUARY 2020
PLATE W-44B

ISSUED FOR BID

Mott MacDonald Florida, LLC
10245 Centurion Parkway North
Suite 320
Jacksonville, Florida 32256
Telephone: (904) 203-1090
Architects AA - C0000035
Engineers EB - 0000155
Surveyors LB - 0006783
MOTT MACDONALD

REVISIONS		
NO.	BY	DATE
6.		
5.		
4.		
3.		
2.		
1.		

DESIGN ENGINEER
BRUCE A. NEU
FLORIDA REGISTRATION NO. 51672

DESIGNER: F. NGUYEN
DRAWN BY: D. JACOBS
DATE: OCT 2020
CHECKED BY: P. MOURT
DATE: OCT 2020

JEA Building Community

DOWNTOWN CHILLED WATER MAINS AND FIBER OPTIC CONDUITS
STANDARD CIVIL DETAILS

PROJ. NO. 502100442-001
DATE: OCT 2020
SCALE: AS NOTED

NO. SHEETS 36
SHEET NO. 12
DRAWING NO. CD-2

C:\users\jac91951\appdata\local\projectwise\workdir\mott-use-pw-14\d0512199\CD-2 CHM.dwg Current Layout Tab = Layout1 Wed Oct 21, 2020 - 09:19
Xrefs Attached= JEA_SHT22x34_BOR WM [..\d0512226\JEA_SHT22x34_BOR CHM.dwg]

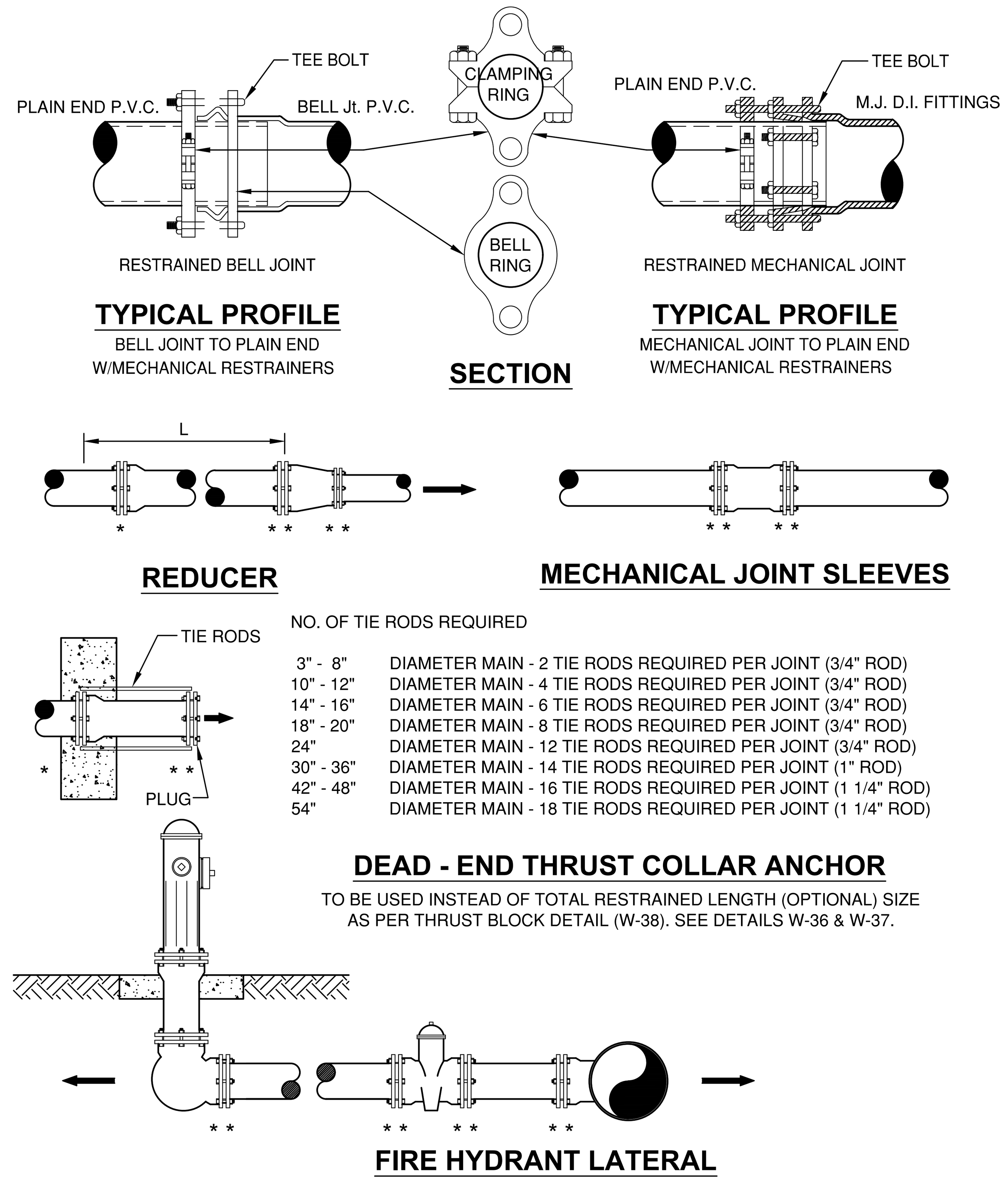

GENERAL NOTE:

1. PAY ITEM " * " DENOTES A RESTRAINT WHICH IS PAID FOR ON A PER EACH BASIS.
2. PAY ITEM " ** " DENOTES A RESTRAINT WHICH IS INCLUDED IN THE UNIT PRICE BID FOR FITTING OR VALVE.
3. ⟶ INDICATES DIRECTION OF THRUST FORCE.

A MECHANICAL RESTRAINT DETAILS - I

NTS

JANUARY 2020

PLATE W-31C

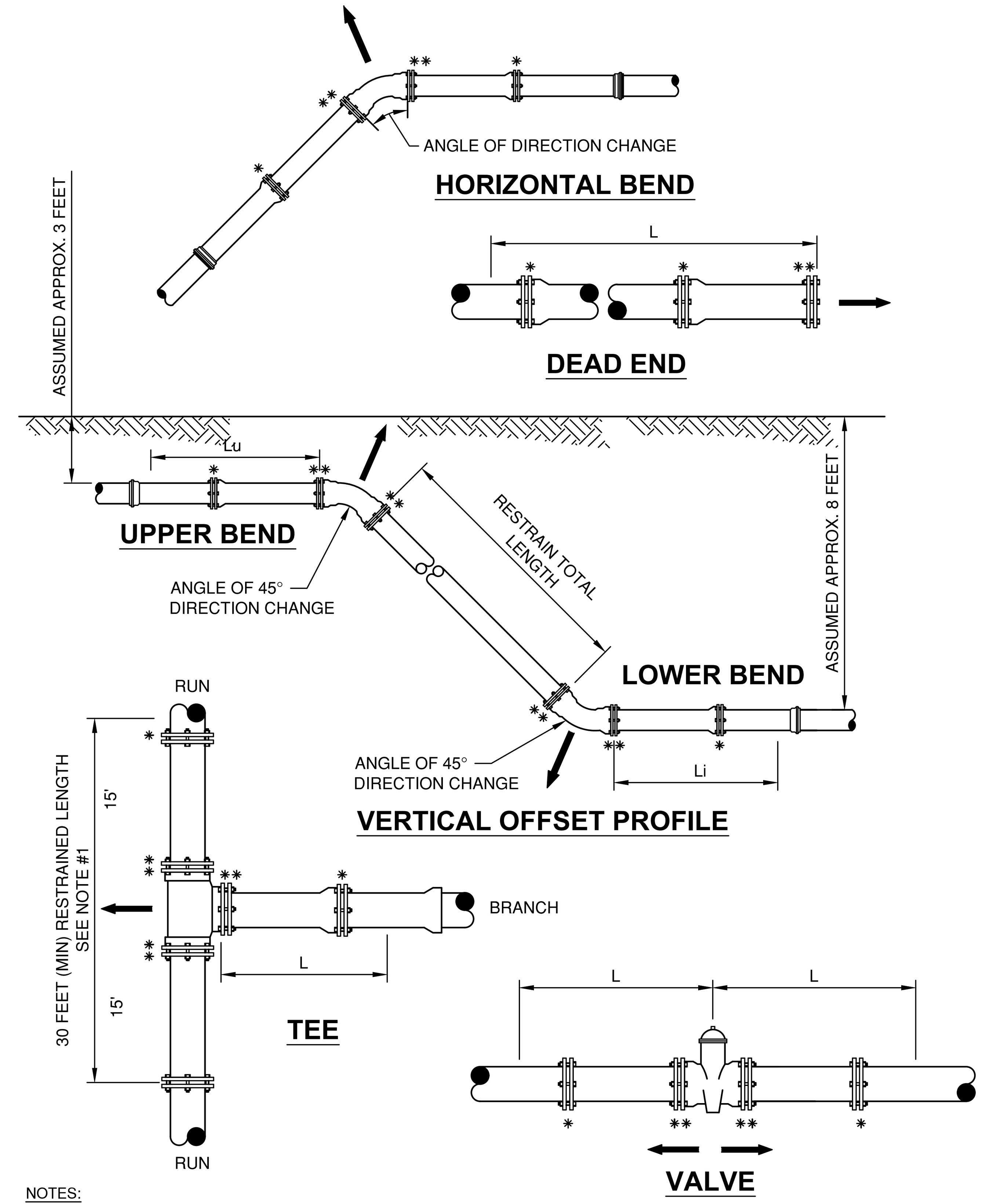

NOTES:

1. TOTAL LENGTH BETWEEN FIRST JOINTS OR RESTRAINED LENGTH ON EITHER SIDE OF TEE (RUN) SHALL BE A TOTAL DISTANCE OF 30 FEET (MIN.).
2. PAY ITEM "*" DENOTES A RESTRAINT WHICH IS PAID FOR ON A PER EACH BASIC.
3. PAY ITEM "**" DENOTES A RESTRAINT WHICH IS INCLUDED IN THE UNIT PRICE BID FOR FITTING OR VALVE.

B MECHANICAL RESTRAINTS DETAILS - II

NTS

JANUARY 2020

PLATE W-31D

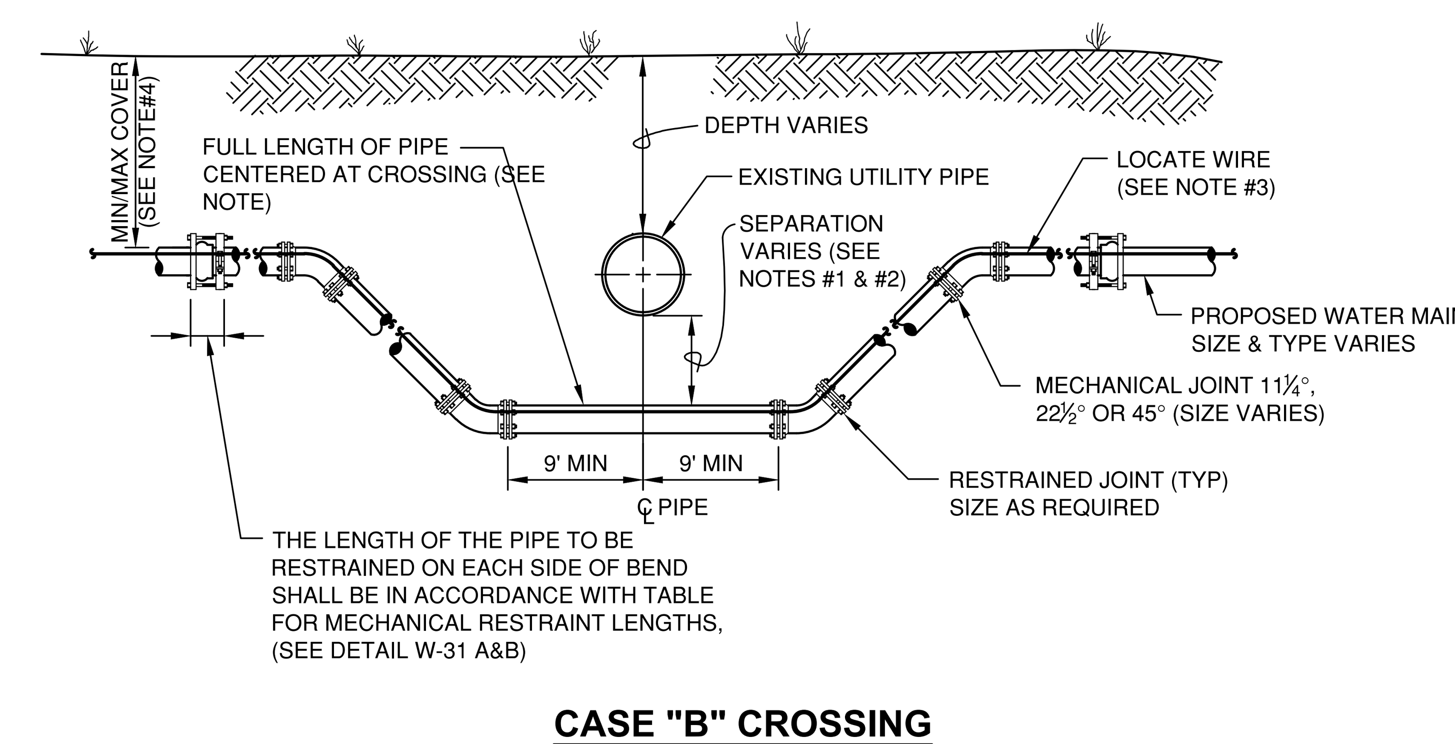

CASE "B" CROSSING

NOTES:

1. THE SOILS BETWEEN THE NEW MAIN AND THE CONFLICT PIPE SHALL BE COMPACTED TO 98% OF THE MAXIMUM DENSITY AS DETERMINED BY THE LABORATORY MODIFIED PROCTOR TEST, ASTM D 1557
2. FOR MINIMUM VERTICAL SEPARATION REQUIREMENTS SEE DETAILS (W-10 AND W-11).
3. LOCATING WIRE REQUIRED: SEE DETAIL W-44.
4. THE COVER FOR PIPING LESS THAN 24" SIZE SHALL BE 30" (MIN) IN UNPAVED AREA, 36" (MIN) IN PAVED AREAS AND A MAXIMUM COVER OF 60", UNLESS APPROVED BY JEA. THE COVER FOR PIPING 24" SIZE AND LARGER SHALL BE 36" (MIN) IN PAVED AND UNPAVED AREAS AND A MAXIMUM COVER OF 84", UNLESS APPROVED BY JEA.

C ADJUSTMENT UNDER EXISTING UTILITIES MECHANICAL RESTRAINTS

NTS

JANUARY 2020

PLATE W-34

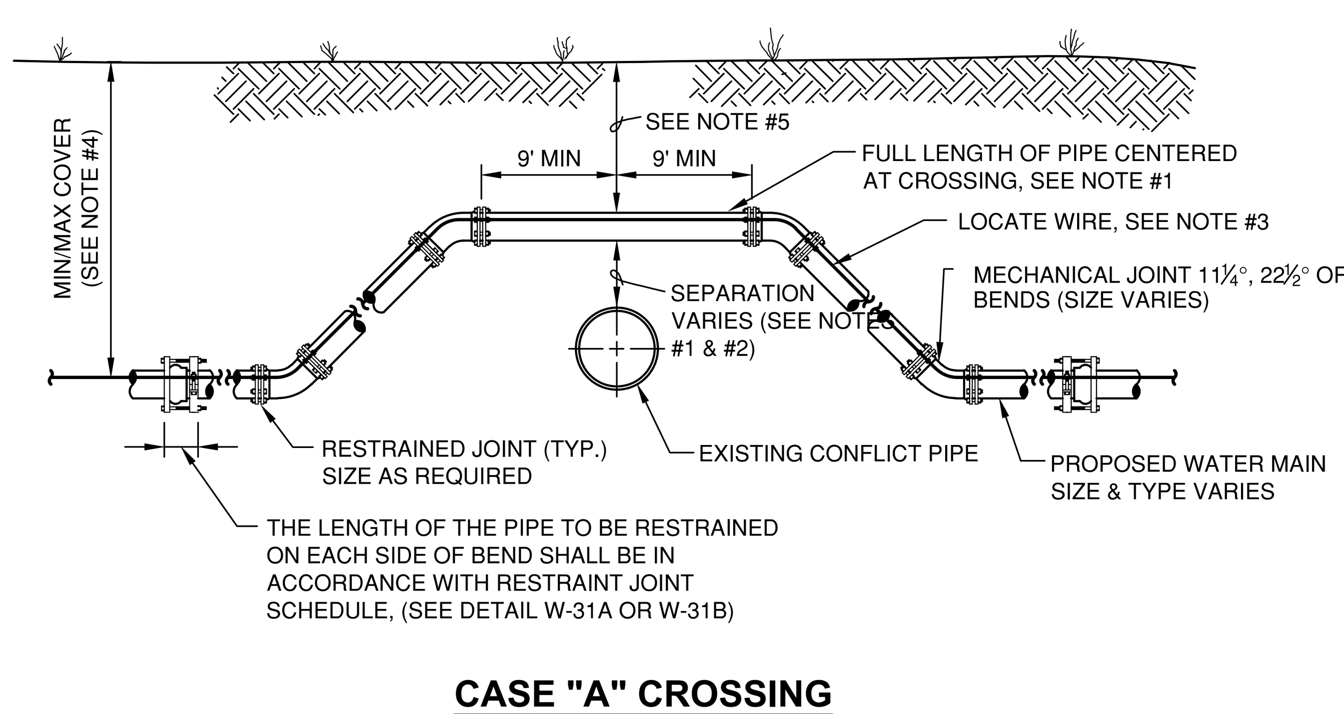

CASE "A" CROSSING

NOTES:

1. THE SOILS BETWEEN THE NEW MAIN AND THE CONFLICT PIPE SHALL BE COMPACTED TO 98% OF THE MAXIMUM DENSITY AS DETERMINED BY THE LABORATORY MODIFIED PROCTOR TEST, ASTM D 1557.
2. FOR MINIMUM VERTICAL SEPARATION REQUIREMENTS SEE DETAIL (W-10 AND W-11).
3. LOCATING WIRE REQUIRED: SEE DETAIL W-44.
4. THE COVER FOR PIPING LESS THAN 24" SIZE SHALL BE 30" (MIN) IN UNPAVED AREAS, 36" (MIN) IN PAVED AREAS AND A MAXIMUM COVER OF 60", UNLESS APPROVED BY JEA. THE COVER FOR PIPING 24" SIZE AND LARGER SHALL BE 36" (MIN) IN PAVED AND UNPAVED AREAS AND A MAXIMUM COVER OF 84", UNLESS APPROVED BY JEA.
5. IF UTILITY CONFLICT IS LOCATED IN A NON-TRAFFIC AREA (NO TRAFFIC LOADS) AND THE NEW PIPE IS D.I.P., THEN THE MINIMUM COVER MAY BE REDUCED TO 24 INCHES (ONLY IN THE AREA OF THE CONFLICT).

D ADJUSTMENT OVER EXISTING UTILITIES MECHANICAL RESTRAINTS

NTS

JANUARY 2020

PLATE W-32

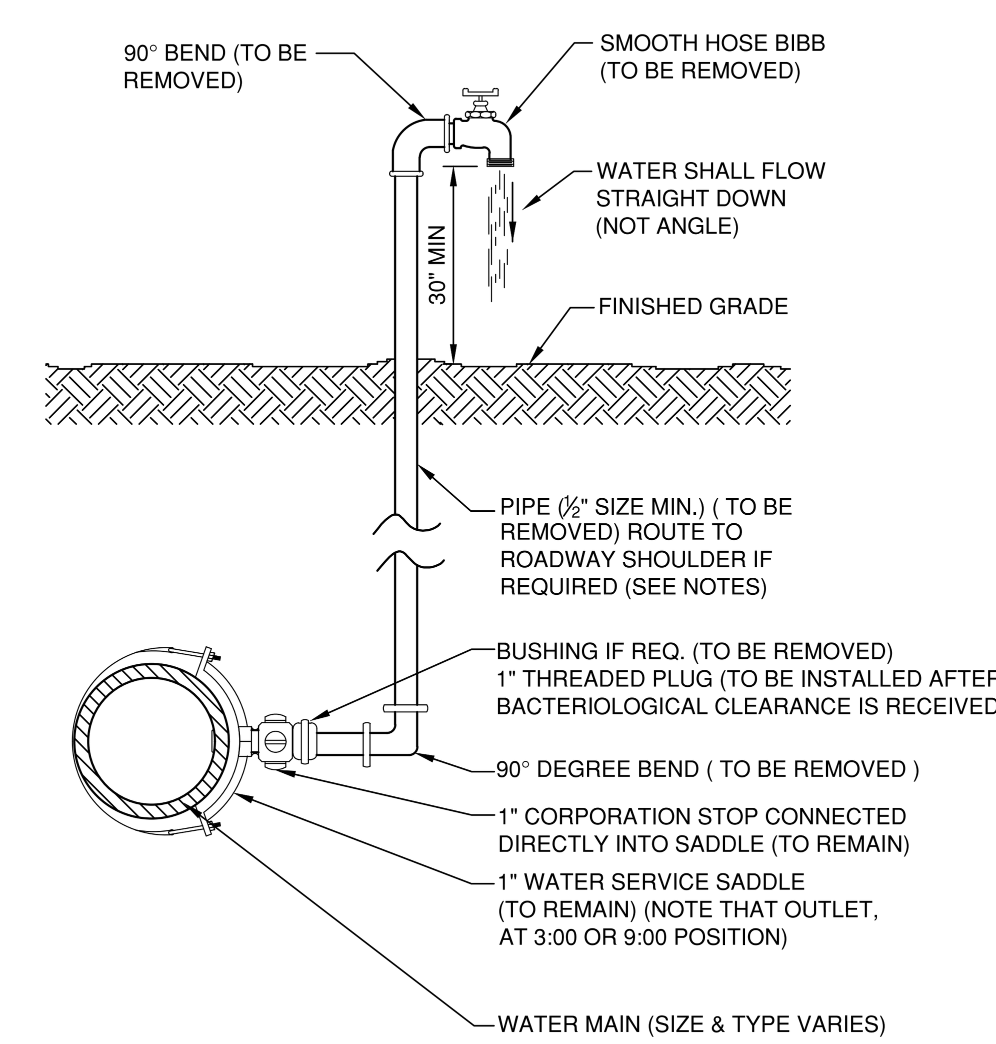

NOTES:

1. LOCATION OF SAMPLE POINT BIBB SHALL NOT BE WITHIN THE ROADWAY BUT ROUTED TO THE ROADWAY SHOULDERS (NON-TRAFFIC AREAS).
2. THE CONTRACTOR SHALL BE RESPONSIBLE FOR THE REMOVAL OF ALL TEMPORARY PIPING & FITTINGS (AS NOTED), AFTER BACTERIOLOGICAL CLEARANCE IS RECEIVED.
3. PIPE AND FITTINGS SHALL BE PVC (SCH. 40) OR GALV. MATERIAL.
4. THE USE OF THE ABOVE CONSTRUCTION FOR A TEMPORARY SAMPLE POINT SHALL BE LIMITED TO AREAS WHERE A SAMPLE TAP BY ALTERNATIVE METHODS (SEE W-24) IS NOT FEASIBLE OR IF DIRECTED OTHERWISE BY JEA.
5. THE CONTRACTOR SHALL COMPLY WITH ALL JEA RULES AND POLICIES AS AS OUTLINED BY JEA'S ENVIRONMENTAL RESPONSE COORDINATOR (ERC) AND OTHER ASSOCIATED JEA STANDARDS.

E TEMPORARY TEST TAP

NTS

JANUARY 2020

PLATE W-25

ISSUED FOR BID

MOTT MACDONALD

REVISIONS

NO.	BY	DATE
6.		
5.		
4.		
3.		
2.		
1.		

DESIGN ENGINEER: BRUCE A. NEU

FLORIDA REGISTRATION NO. 51672

DESIGNER: F. NGUYEN
DRAWN BY: D. JACOBS
DATE: OCT 2020
CHECKED BY: P. MOURT
DATE: OCT 2020

JEA Building Community

DOWNTOWN CHILLED WATER MAINS AND FIBER OPTIC CONDUITS
STANDARD CIVIL DETAILS

PROJ. NO. 502100442-001
DATE: OCT 2020
SCALE: AS NOTED

NO. SHEETS 36
SHEET NO. 13
DRAWING NO. CD-3

C:\users\jac91951\appdata\local\projectwise\workdir\mott-use-pw-14\d0512199\CD-3 CHM.dwg Current Layout Tab = Layout1 Wed Oct 21, 2020 - 09:18

Xrefs Attached= JEA_SHT22x34_BOR WM [..\d0512226\JEA_SHT22x34_BOR CHM.dwg]

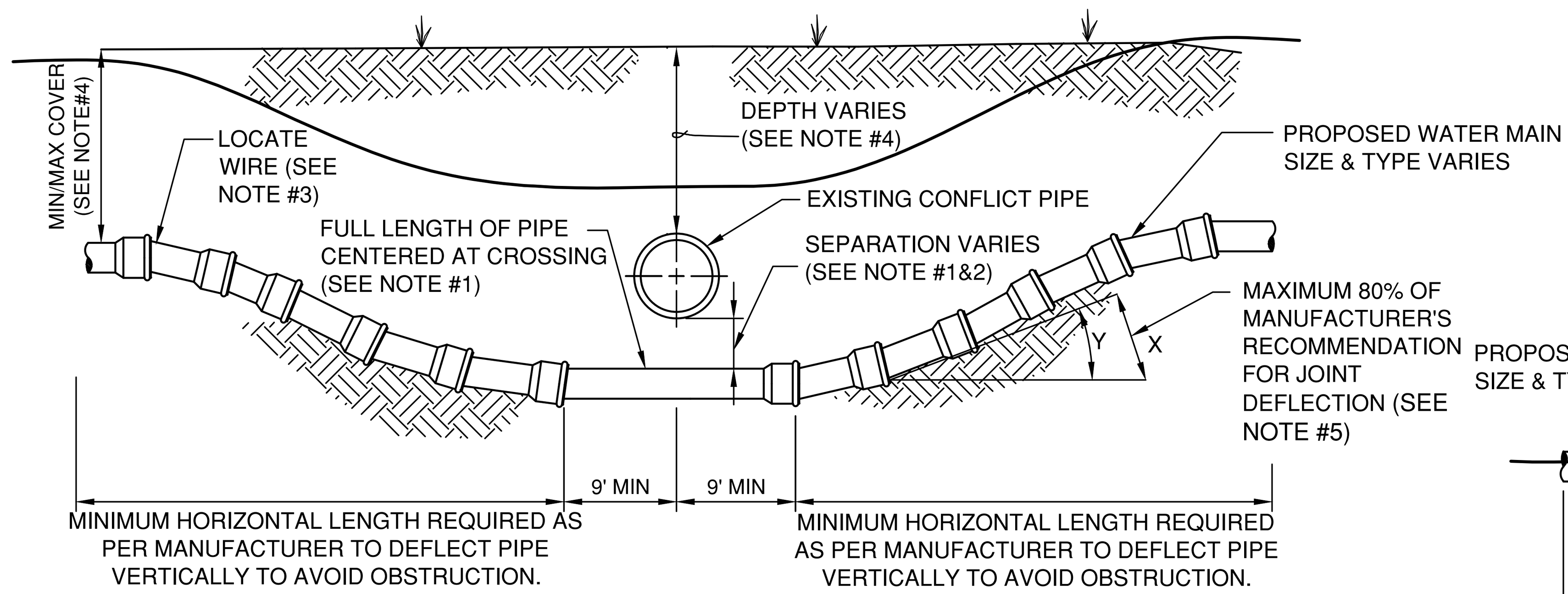

CASE "B" CROSSING

NOTES:

1. IF EXISTING CONFLICT PIPE IS A WATER MAIN, 12-INCHES OF SEPARATION IS REQUIRED. A FULL LENGTH OF PIPE SHALL BE CENTERED OVER EXISTING UTILITY MAIN TO PROVIDE MAXIMUM JOINT SPACING FOR ALL CROSSING.
2. FOR OTHER LOCATION LIMITATIONS SEE DETAIL (W-10 & W-11).
3. LOCATING WIRE REQUIRED: SEE DETAIL W-44.
4. THE COVER OVER ALL PIPING LESS THAN 24" SIZE SHALL BE A MINIMUM OF 30" IN UNPAVED AREAS AND 36" IN PAVED AREAS WITH A MAXIMUM COVER OF 60" UNLESS APPROVED OTHERWISE BY JEA. COVER FOR PIPING 24" SIZE AND LARGER SHALL BE MINIMUM OF 36" (PAVED AND UNPAVED) AND MAXIMUM OF 84" UNLESS APPROVED OTHERWISE BY JEA. THE SOILS BETWEEN THE NEW MAIN AND THE CONFLICT PIPE SHALL BE COMPACTED TO 98% OF THE MAXIMUM DENSITY AS DETERMINED BY THE LABORATORY MODIFIED PROCTOR TEST ASTM D 1557.
5. JEA ONLY ALLOWS 80% OF THE PIPE MANUFACTURER'S RECOMMENDATION FOR JOINT DEFLECTION. BENDING THE PIPE BARREL IS NOT ALLOWED. UNLESS OTHERWISE APPROVED BY JEA, THE MAXIMUM ARE LISTED IN TABLE BELOW. ONLY MANUAL FORCE CAN BE UTILIZED TO OBTAIN THESE JOINT DEFLECTION. ALL OFFSETS ARE BASED ON MINIMUM 20LF PIPE LENGTH.

MAXIMUM ALLOWED OFFSET FOR PIPE BY JOINT DEFLECTION

PVC PIPE

PIPE SIZE (IN.)	(X) MAX. OFFSET (IN.)	(Y) ANGLE AT ONE BELL	RESULTING RADIUS OF CURVE WITH 20FT. LENGTHS
2	30	7°	158 FT
4	10	2.4°	480 FT
6	10	2.4°	480 FT
8	10	2.4°	480 FT
10	10	2.4°	480 FT
12	8.5	2°	564 FT
14 - 24	5	1.2°	960 FT
30 - 48	3.25	0.8°	1477 FT

DUCTILE IRON PIPE (Mechanical Joint)

PIPE SIZE (IN.)	(X) MAX. OFFSET (IN.)	(Y) ANGLE AT ONE BELL	RESULTING RADIUS OF CURVE WITH 20FT. LENGTHS
-	-	-	-
4	27	6.5°	177 FT
6	24	5.7°	200 FT
8 - 12	17.5	4.2°	273 FT
14 - 16	12	2.9°	400 FT
18 - 20	10	2.4°	477 FT
24 - 30	8	1.9°	600 FT
36	7	1.7°	687 FT
42 - 48	6.7	1.6°	716 FT

A ADJUSTMENT UNDER EXISTNG UTILITIES PIPE JOINT DEFLECTION

\- NTS

JANUARY 2020
PLATE W-40

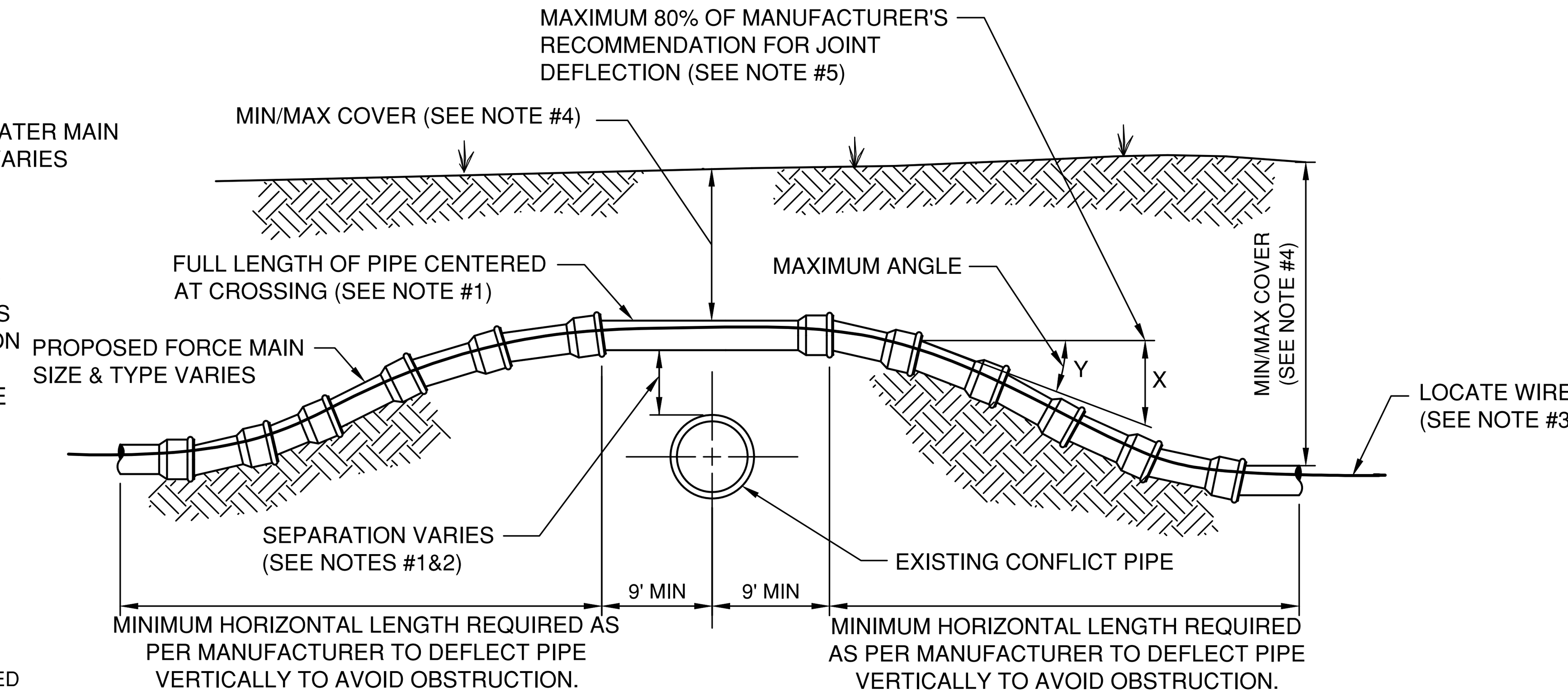

CASE "A" CROSSING

NOTES:

1. IF EXISTING CONFLICT PIPE IS A WATER MAIN, 12-INCHES OF SEPARATION IS REQUIRED. A FULL LENGTH OF PIPE SHALL BE CENTERED OVER EXISTING UTILITY MAIN TO PROVIDE MAXIMUM JOINT SPACING FOR ALL CROSSING.
2. FOR OTHER LOCATION LIMITATIONS SEE DETAIL (A/CD-2 & B/CD-2).
3. LOCATING WIRE REQUIRED: SEE DETAIL D/CD-2.
4. THE COVER OVER ALL PIPING LESS THAN 24" SIZE SHALL BE A MINIMUM OF 30" IN UNPAVED AREAS AND 36" IN PAVED AREAS WITH A MAXIMUM COVER OF 60" UNLESS APPROVED OTHERWISE BY JEA. COVER FOR PIPING 24" SIZE AND LARGER SHALL BE MINIMUM OF 36" (PAVED AND UNPAVED) AND MAXIMUM OF 84" UNLESS APPROVED OTHERWISE BY JEA. THE SOILS BETWEEN THE NEW MAIN AND THE CONFLICT PIPE SHALL BE COMPACTED TO 98% OF THE MAXIMUM DENSITY AS DETERMINED BY THE LABORATORY MODIFIED PROCTOR TEST ASTM D 1557.
5. JEA ONLY ALLOWS 80% OF THE PIPE MANUFACTURER'S RECOMMENDATION FOR JOINT DEFLECTION. BENDING THE PIPE BARREL IS NOT ALLOWED. UNLESS OTHERWISE APPROVED BY JEA, THE MAXIMUM ARE LISTED IN TABLE BELOW. ONLY MANUAL FORCE CAN BE UTILIZED TO OBTAIN THESE JOINT DEFLECTION. ALL OFFSETS ARE BASED ON MINIMUM 20LF PIPE LENGTH.

MAXIMUM ALLOWED OFFSET FOR PIPE BY JOINT DEFLECTION

PVC PIPE

PIPE SIZE (IN.)	(X) MAX. OFFSET (IN.)	(Y) ANGLE AT ONE BELL	RESULTING RADIUS OF CURVE WITH 20FT. LENGTHS
2	30	7°	158 FT
4	10	2.4°	480 FT
6	10	2.4°	480 FT
8	10	2.4°	480 FT
10	10	2.4°	480 FT
12	8.5	2°	564 FT
14 - 24	5	1.2°	960 FT
30 - 48	3.25	0.8°	1477 FT

DUCTILE IRON PIPE (Mechanical Joint)

PIPE SIZE (IN.)	(X) MAX. OFFSET (IN.)	(Y) ANGLE AT ONE BELL	RESULTING RADIUS OF CURVE WITH 20FT. LENGTHS
-	-	-	-
4	27	6.5°	177 FT
6	24	5.7°	200 FT
8 - 12	17.5	4.2°	273 FT
14 - 16	12	2.9°	400 FT
18 - 20	10	2.4°	477 FT
24 - 30	8	1.9°	600 FT
36	7	1.7°	687 FT
42 - 48	6.7	1.6°	716 FT

B ADJUSTMENT OVER EXISTNG UTILITIES PIPE JOINT DEFLECTION

\- NTS

JANUARY 2020
PLATE W-41

ISSUED FOR BID

MOTT MACDONALD

REVISIONS

NO.	BY	DATE
6.		
5.		
4.		
3.		
2.		
1.		

DESIGN ENGINEER: BRUCE A. NEU
FLORIDA REGISTRATION NO. 51672

DESIGNER: F. NGUYEN
DRAWN BY: D. JACOBS
DATE: OCT 2020
CHECKED BY: P. MOURT
DATE: OCT 2020

JEA Building Community

DOWNTOWN CHILLED WATER MAINS AND FIBER OPTIC CONDUITS
STANDARD CIVIL DETAILS

PROJ. NO. 502100442-001
DATE: OCT 2020
SCALE: AS NOTED

NO. SHEETS 36
SHEET NO. 14
DRAWING NO. CD-4

C:\users\jac91951\appdata\local\projectwise\workdir\mott-use-pw-14\d0512199\CD-4 CHM.dwg Current Layout Tab = Layout1 Wed Oct 21, 2020 - 09:18
Xrefs Attached= JEA_SHT22x34_BOR WM [..\d0512226\JEA_SHT22x34_BOR CHM.dwg]

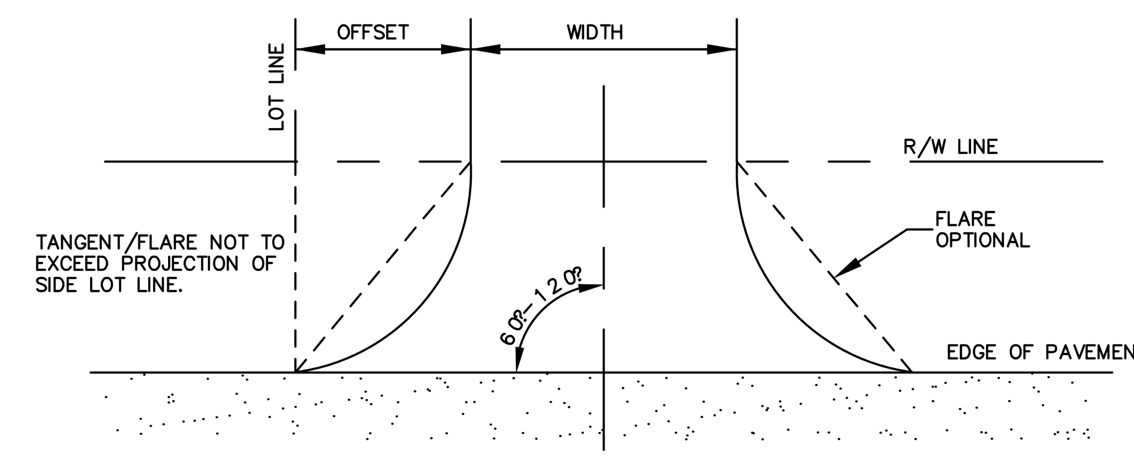

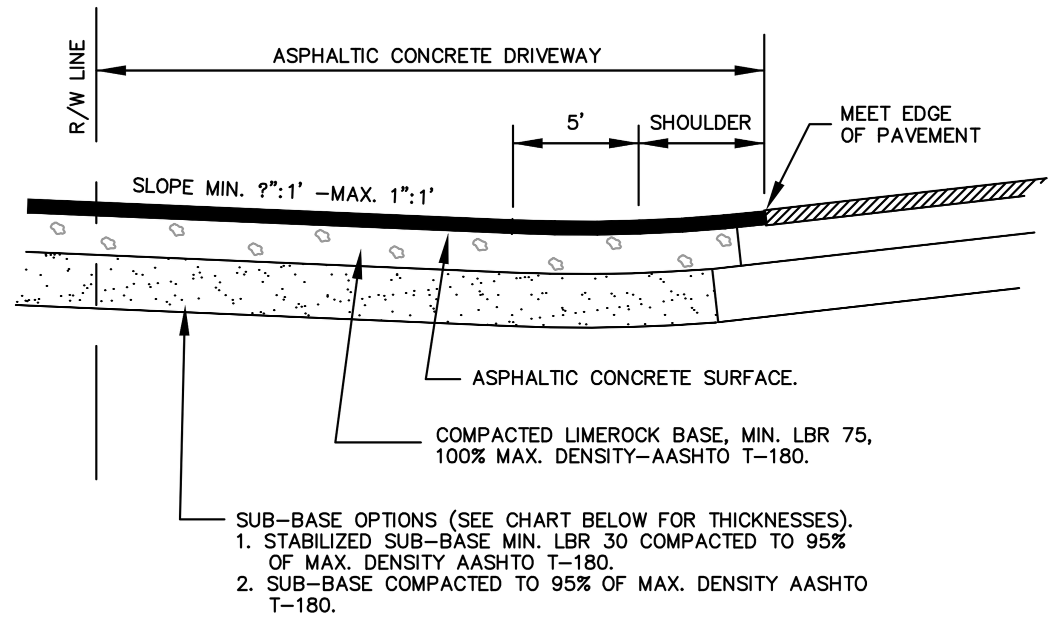

1. ALL DRIVEWAYS CONSTRUCTED WITHIN CITY MAINTAINED RIGHT-OF-WAYS SHALL CONFORM TO CITY STANDARDS. A PERMIT MUST BE ISSUED BY THE DEPARTMENT OF PUBLIC WORKS FOR ALL SUCH WORK.
2. ALL MATERIALS SHALL CONFORM TO CITY STANDARDS.
3. ALL DRIVEWAYS CONSTRUCTED WITHIN STATE MAINTAINED RIGHT-OF-WAYS SHALL CONFORM TO D.O.T. STANDARDS.

DRIVEWAY TYPE	MIN. WIDTH	MAX. WIDTH	PAVEMENT OPTION #1			PAVEMENT OPTION #2			MIN. RADIUS	MIN. OFFSET	OPTIONAL FLARE
			ASPHALT	LIMEROCK	STABILIZED SUB-BASE	ASPHALT	LIMEROCK	STABILIZED SUB-BASE			
CLASS I RESIDENTIAL	8'	24'	1 1/4"	6"	6"	1 1/4"	8"	4"	3'	3'	3'
CLASS II COMMERCIAL	24'	36'	1 1/4"	6"	12"	1 1/4"	8"	6"	30'	30'	7'
CLASS III HIGH VOLUME	24'	36'	1 1/4"	8"	12"	1 1/4"	12"	12"	30'	30'	N/A

(A) STANDARD ASPHALTIC CONCRETE DRIVEWAY

- NTS

OCTOBER 1997
PLATE P-204

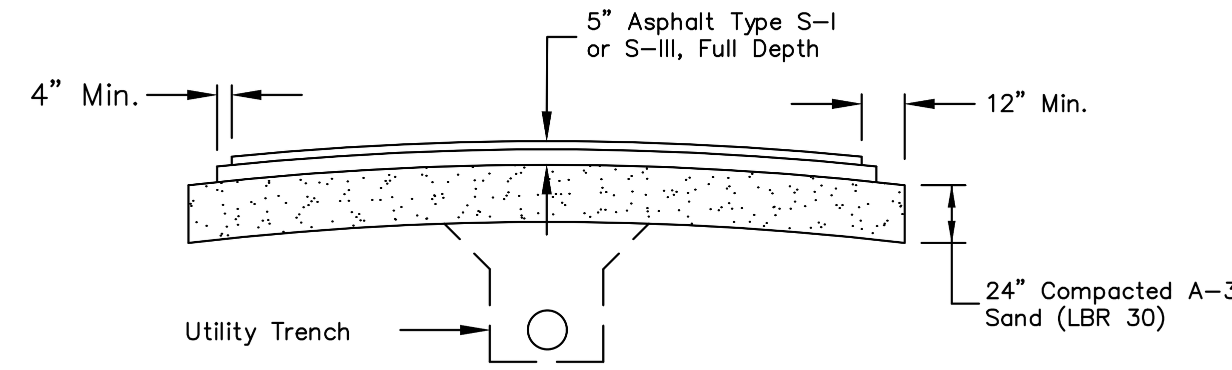

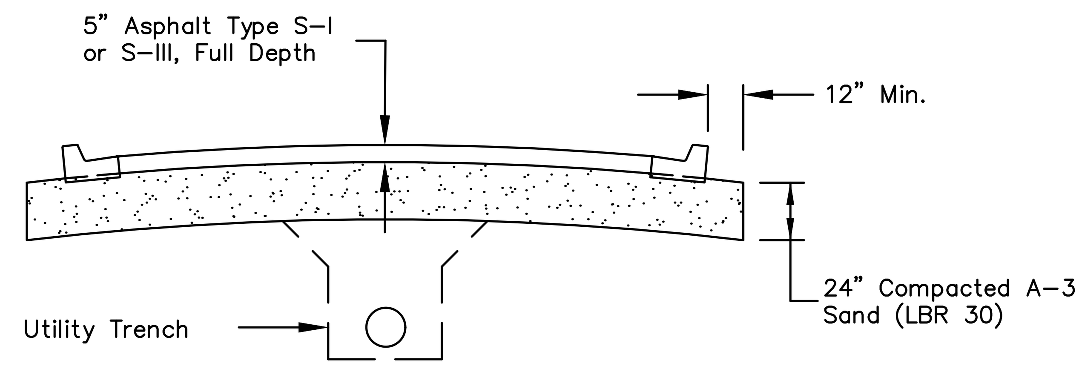

Note: Full Depth Pavement Shall Be Constructed In 2 Lifts Consisting of a 3" (Compacted) Base & a 2" (Compacted) Surface.

Type III Asphalt Pavement May Be Constructed In Lieu of the Type S Pavement, If the Compacted A-3 Sand Sub-Base Is Constructed to Min. LBR 35.

(B) ASPHALT ACCESS ROADWAY REPLACEMENT

- NTS

NOVEMBER 1997
COJ

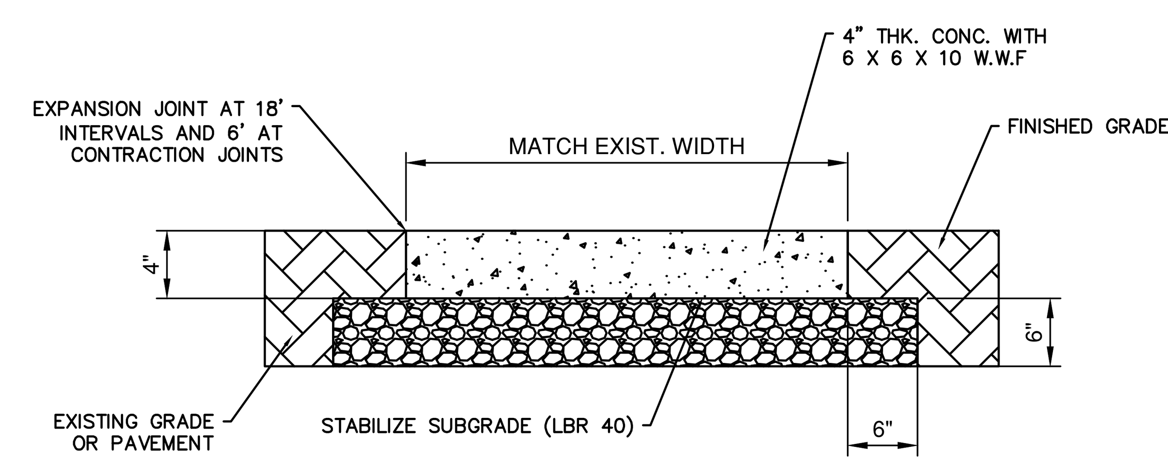

NOTE: WHERE THE SIDEWALK IS ADJACENT TO THE PAVEMENT, THE SIDEWALK SHALL ABUT THE PAVEMENT AND BE AT THE SAME ELEVATION.

(F) COJ SIDEWALK DETAIL

- NTS

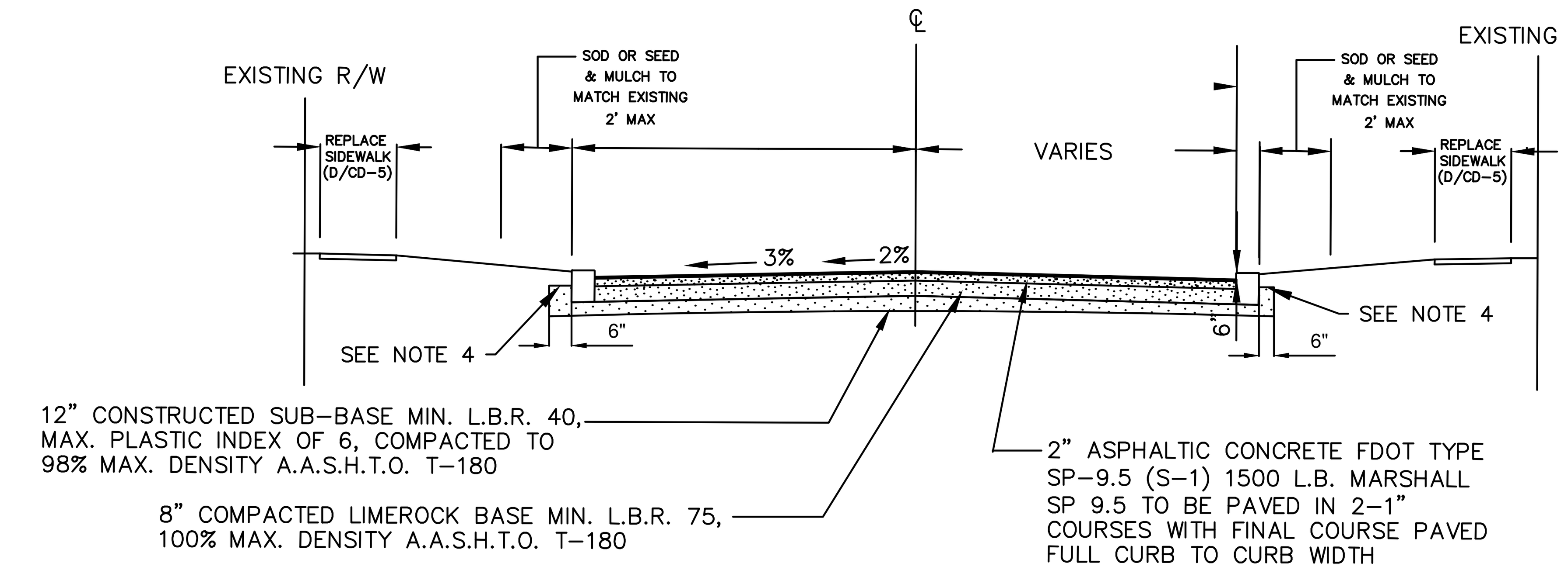

NOTE:

1. ALL DISTURBED AREAS SHALL BE SEEDED & MULCHED. ALL AREAS WHERE SOD HAS BEEN DISTURBED OR REMOVED SHALL BE RESODDED TO SATISFACTION OF OWNER.
2. ALL ASPHALTIC CONCRETE AND INSTALLATION SHALL MEET THE REQUIREMENTS OF SECTIONS 330 AND 334, F.D.O.T. STANDARD SPECIFICATIONS, LATEST EDITION.
3. ALL EXISTING PAVEMENT STRIPING TO BE REPLACED IN-KIND TO COJ STANDARDS.
4. REPLACE EXISTING COJ CURB IN-KIND TO EXISTING GRADE.

(C) COJ ROAD RECONSTRUCTION STANDARD

- NTS

CASE IX

NOTE: EXISTING PAVEMENT SHOULD BE MILLED PRIOR TO OVERLY

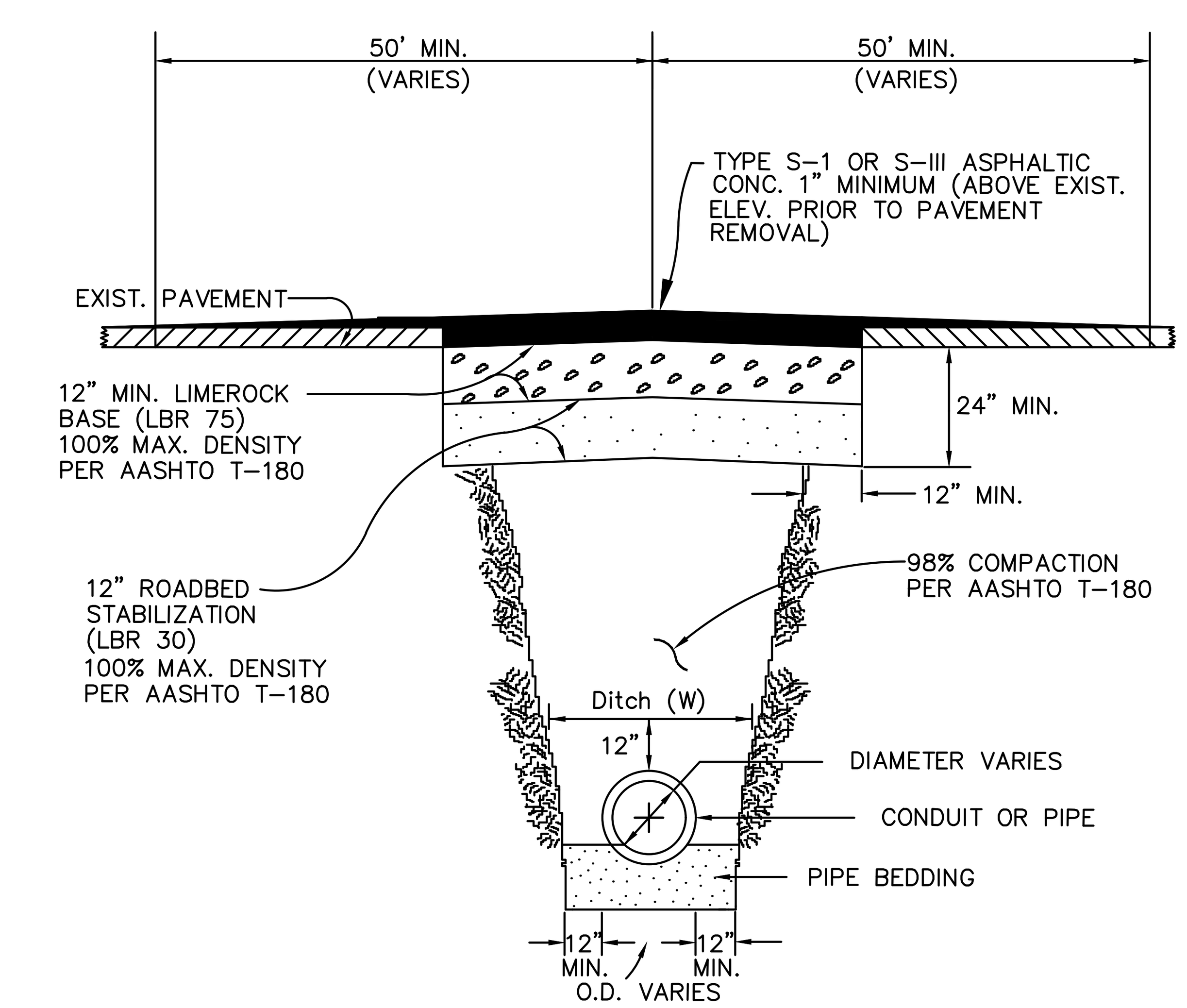

(G) COJ STANDARD PAVING REPAIR DETAILS (CASE IX) - CURB TO CURB

- NTS

SEPTEMBER 2003
PLATE P-408

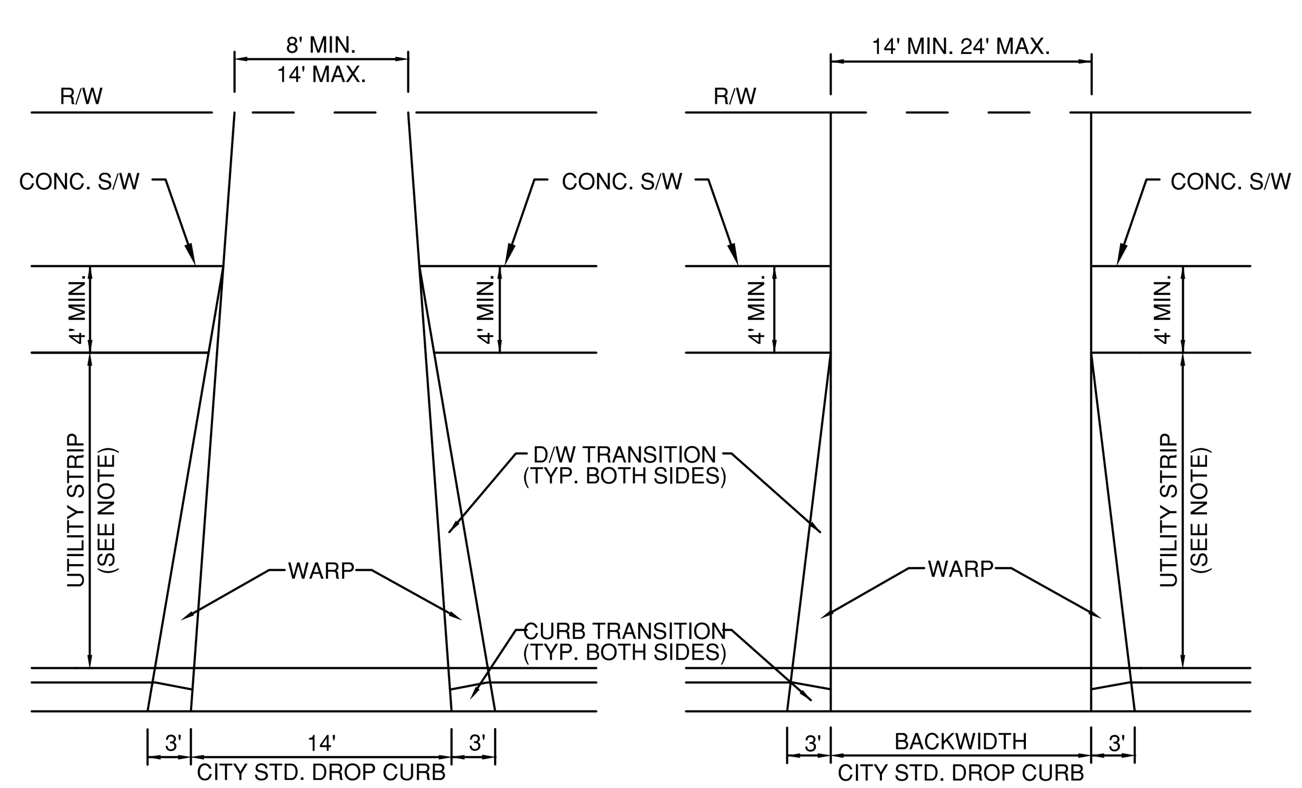

NOTE:
WHERE UTILITY STRIP IS LESS THAN 5', D/W TRANS. TO MEET BACK OF S/W. WHERE UTILITY STRIP IS 5' OR GREATER, D/W TRANS. TO MEET FRONT OF S/W.

(D) STANDARD & OPTIONAL FLARED CONCRETE DRIVEWAY DETAIL

- NTS

APRIL 2009
PLATE P-205

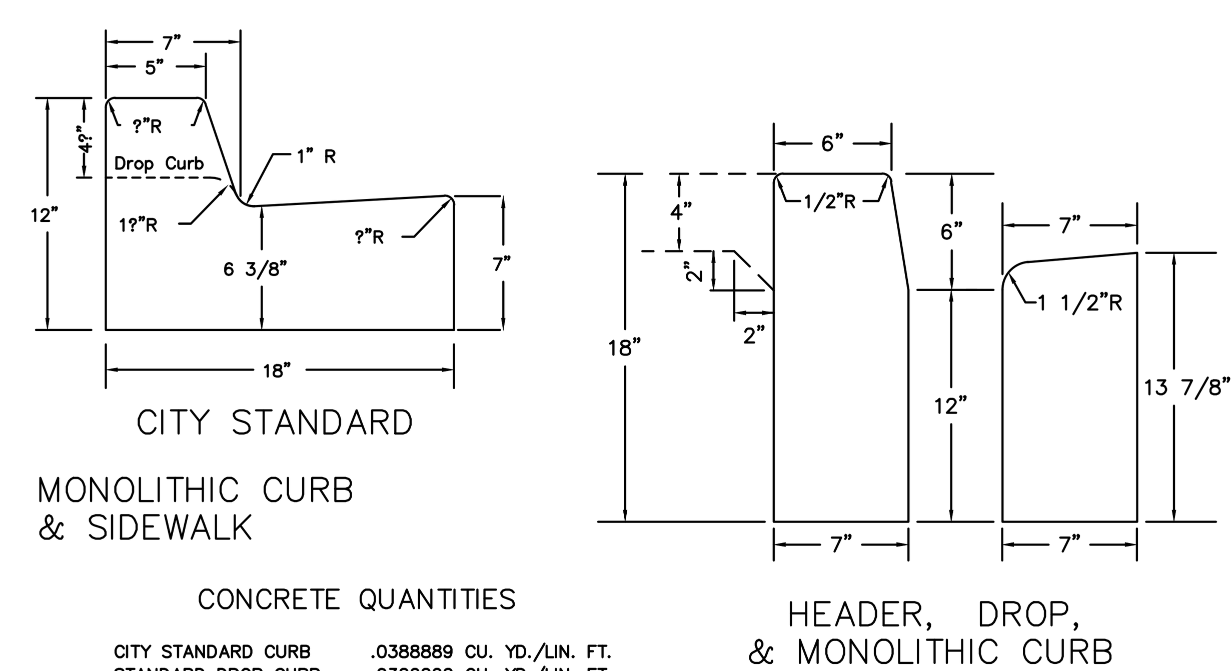

CONCRETE QUANTITIES

CITY STANDARD CURB	.0388889	CU. YD./LIN. FT.
STANDARD DROP CURB	.0322222	CU. YD./LIN. FT.
MEDIAN CURB	.0411111	CU. YD./LIN. FT.
MIAMI CURB	.0325926	CU. YD./LIN. FT.
HEADER CURB	.0314815	CU. YD./LIN. FT.
HEADER DROP CURB	.0244444	CU. YD./LIN. FT.

(E) CITY STANDARD CURB TEMPLATES

- NTS

APRIL 2009
PLATE P-301

ISSUED FOR BID

Mott MacDonald Florida, LLC
10245 Centurion Parkway North
Suite 320
Jacksonville, Florida 32256
Telephone (904) 203-1090
Architects AA - C0000035
Engineers EB - 0000155
Surveyors LB - 0006783

MOTT MACDONALD

NO.	BY	DATE	REVISIONS
6.			
5.			
4.			
3.			
2.			
1.			

DESIGN ENGINEER
BRUCE A. NEU
FLORIDA REGISTRATION NO.
51672

DESIGNER:	F. NGUYEN
DRAWN BY:	D. JACOBS
DATE:	OCT 2020
CHECKED BY:	P. MOURT
DATE:	OCT 2020

JEA Building Community

DOWNTOWN CHILLED WATER MAINS AND FIBER OPTIC CONDUITS
STANDARD CIVIL DETAILS

PROJ. NO.	502100442-001
DATE:	OCT 2020
SCALE:	AS NOTED

NO. SHEETS 36
SHEET NO. 15
DRAWING NO. CD-5

C:\users\jac91951\appdata\local\projectwise\workdir\mott-use-pw-14\d0512199\CD-5 CHM.dwg   Current Layout Tab = Layout1   Wed Oct 21, 2020 - 09:17

Xrefs Attached= JEA_SHT22x34_BOR WM [..\d0512226\JEA_SHT22x34_BOR CHM.dwg]
x-Proposed_CHM Route A [..\d0512201\x-Proposed_CHM Route A.dwg]

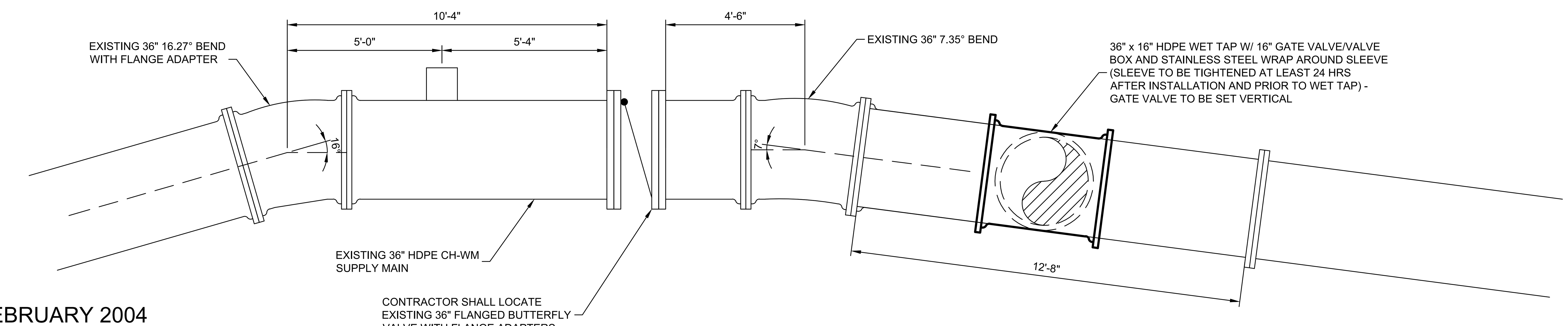

JEA AS-BUILTS
PROJECT NO. 1007739 - FEBRUARY 2004
SHEET D1

A CONNECTION TO EXISTING 36" CH-WM - RETURN

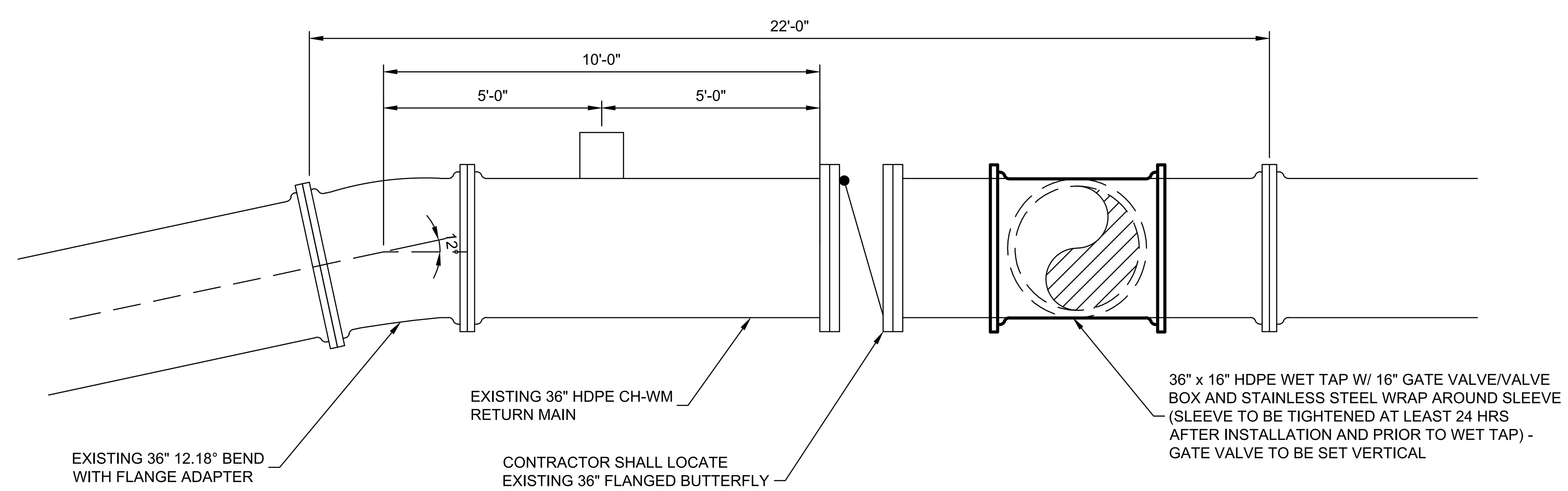

JEA AS-BUILTS
PROJECT NO. 1007739 - FEBRUARY 2004
SHEET D1

B CONNECTION TO EXISTING 36" CH-WM - SUPPLY

ISSUED FOR BID

MOTT MACDONALD

REVISIONS

NO.	BY	DATE
6.		
5.		
4.		
3.		
2.		
1.		

DESIGN ENGINEER
BRUCE A. NEU
FLORIDA REGISTRATION NO.
51672

DESIGNER: B. NEU
DRAWN BY: F. NGUYEN
DATE: OCT 2020
CHECKED BY: P. MOURT
DATE: OCT 2020

JEA Building Community

DOWNTOWN CHILLED WATER MAINS AND FIBER OPTIC CONDUITS
CONNECTION TO EXISTING MAINS

PROJ. NO. 502100442-001
DATE: OCT 2020
SCALE: AS NOTED

NO. SHEETS 36
SHEET NO. 16
DRAWING NO. CD-6

C:\users\jac91951\appdata\local\projectwise\workdir\mott-use-pw-14\d0512199\CD-6 CHM.dwg Current Layout Tab = CD-5 Wed Oct 21, 2020 - 09:23
Xrefs Attached= JEA_SHT22x34_BOR [..\d0512226\JEA_SHT22x34_BOR CHM.dwg]

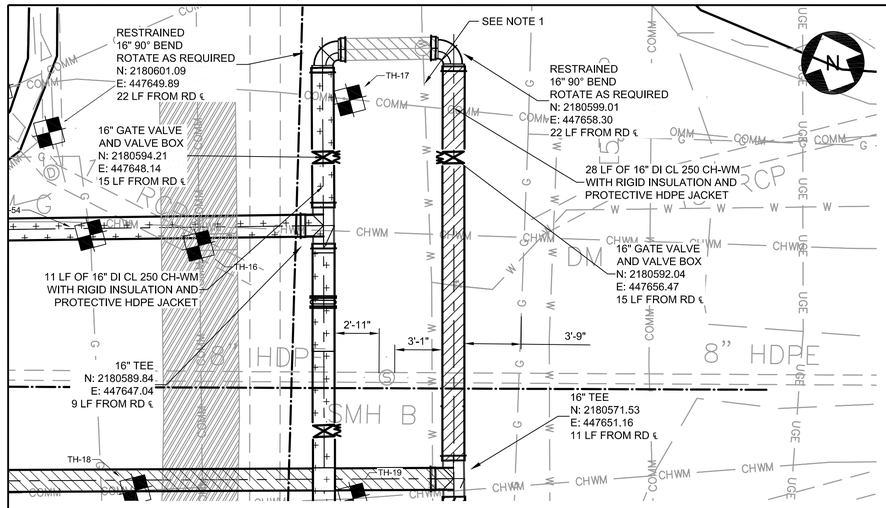

A - CH-WM INTERCONNECTION N. JULIA STREET AND W. DUVAL STREET

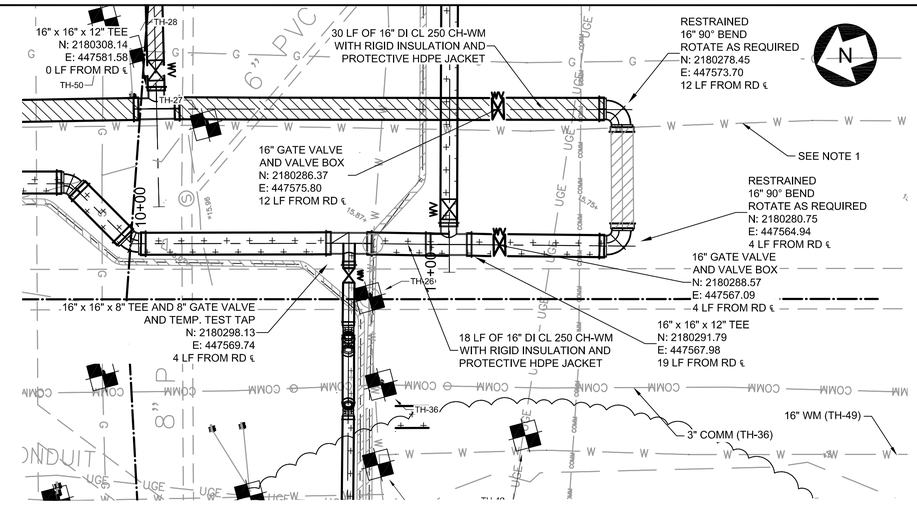

B - CH-WM INTERCONNECTION N. JULIA STREET AND W. MONROE STREET

NOTES:

1) CONTRACTOR SHALL REMOVE AND SEAL EXISTING ABANDONED 12" WM-DI SEGMENT REQUIRED FOR INSTALLATION OF THE CH-WMS AND FIBER OPTIC CONDUITS. APPROXIMATE REMOVAL LIMITS OF THE EXISTING WATER MAIN ARE SHOWN ON C-1 AND C-2. JEA AS-BUILTS INDICATE THAT THE ABANDONED WATER MAIN IS GROUT FILLED.

2) ALL CHILLED WATER PIPE, FITTINGS AND VALVES SHALL HAVE RESTRAINED JOINTS.

HORZ SCALE: 1" = 10 FT. (22x34)
1" = 5 FT. (11x17)

5 0 2.5 5 10
2.5 0 1.25 2.5 5

VERT SCALE: 1" = 1.25 FT. (22x34)
1" = 2.5 FT. (11x17)

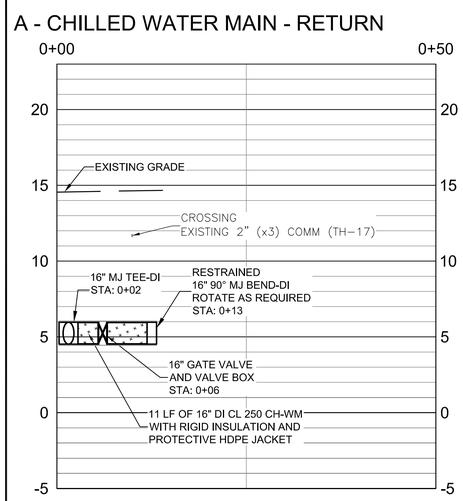

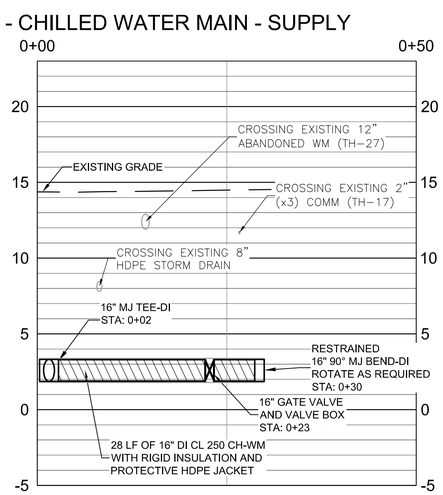

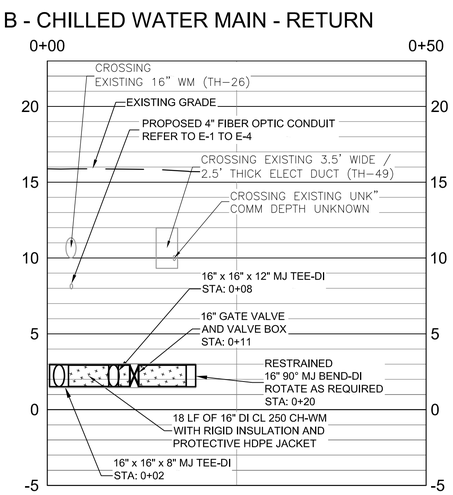

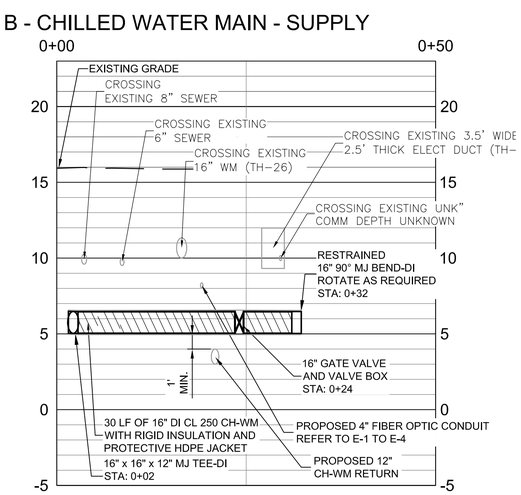

ISSUED FOR BID

MOTT MACDONALD

Mott MacDonald Florida, LLC
10245 Centurion Parkway North
Suite 300
Jacksonville, Florida 32256
Telephone: (904) 205-1090
Architects AA - C000003/35
Engineers EB - 0000155
Surveyors LB - 0006783

NO.	BY	DATE	REVISIONS
6.			
5.			
4.			
3.			
2.			
1.			

DESIGN ENGINEER
BRUCE A. NEU
FLORIDA REGISTRATION NO. 51672

DESIGNER:	F. NGUYEN
DRAWN BY:	D. JACOBS
DATE:	OCT 2020
CHECKED BY:	P. MOURIT
DATE:	OCT 2020

JEA Building Community

DOWNTOWN CHILLED WATER MAINS AND
FIBER OPTIC CONDUITS

CHILLED WATER MAINS INTERCONNECTIONS

PROJ. NO. 502100442-001
DATE: OCT 2020
SCALE: HORIZ: 1" = 5'
VERT: 1" = 2.5'

NO. SHEETS 35
SHEET NO. 17
DRAWING NO. CD-7

C:\users\jac91951\appdata\local\projectwise\workdir\mott-use-pw-14\d0512199\CD-7.dwg Current Layout Tab = CD-7 Thu Oct 22, 2020 - 10:56

BLAKNEY AND SON, CO.

WEST DUVAL STREET

STATE ATTORNEY'S OFFICE

DRAINAGE CURB INLET
THROAT: 14.76'
S. INV. 10.62'

SANITARY MH
RIM 14.10'
S.W. INV. 8.96'
N. INV. 8.94'

DRAINAGE MANHOLE "G"
RIM: 14.08'
NW INV. 9.88'
SE INV. 9.82' PIPE CAPPED
N. INV. 9.78'

THROAT 13.57'
INVERTS NOT OBTAINABLE

CONTRACTOR SHALL PROTECT EXISTING 12" AND 15" LIVE OAK

8" HDPE SANITARY SEWER

24" RCP STORM DRAIN

165 LF OF PROPOSED 4" HDPE DR 13.5 W/ 3 - 1" SMOOTH WALL INNERDUCT 1-144ct FIBER OPTIC CABLE 1-12ga LOCATE WIRE

ROAD ℄

8" HDPE SANITARY SEWER

EXISTING 36" HDPE CH-WM

HORIZONTAL CHANGE RADIUS - 48" MIN. STA: 0+13

HORIZONTAL CHANGE RADIUS - 48" MIN. STA: 0+16

36" RCP STROM DRAIN

EXISTING JEA FIBER MANHOLE (MH-01) NOTE 1

FIBER CURB MARKER

CONTRACTOR SHALL PROTECT EXISTING 28" AND 15" LIVE OAK

EXISTING SANITARY SEWER MH

HORIZONTAL CHANGE RADIUS - 48" MIN. STA: 1+50

HORIZONTAL CHANGE RADIUS - 48" MIN. STA: 1+52

FIBER CURB MARKERS

PROPOSED JEA FIBER MANHOLE (MH-02)

35 LF OF PROPOSED 4" HDPE DR 13.5 W/ 3 - 1" SMOOTH WALL INNERDUCT 1-144ct FIBER OPTIC CABLE 1-12ga LOCATE WIRE

HORIZONTAL CHANGE RADIUS - 48" MIN. STA: 1+96

HORIZONTAL CHANGE RADIUS - 48" MIN. STA: 1+99

MATCHLINE, SEE E-2

HORZ SCALE: 1" = 10 FT. (22x34)
1" = 20 FT. (11x17)

VERT SCALE: 1" = 2.5 FT. (22x34)
1" = 5 FT. (11x17)

NOTES:

1) FIBER OPTIC SPLICE LOCATION. SPLICING DIAGRAMS WILL BE PROVIDED BY JEA.
2) FIBER OPTIC CONDUIT SHALL BE CONCRETE ENCASED FOR INSTALLATION DEPTHS LESS THAN 2' - 6" IN ACCORDANCE WITH DETAIL 'D', ED-1.

DRAINAGE MANHOLE E:
RIM: 14.68'
W. INV: 5.78'
N. INV: 8.86'
E. INV: 7.00'
S. INV: 8.95'

DRAINAGE MANHOLE F:
RIM: 14.67'
W.(N) INV: 9.06'
W.(NS INV: 8.99'
N. INV: 8.86'
A.E. INV: 9.34'
S.E INV: 9.34'
N. INV: 8.50'

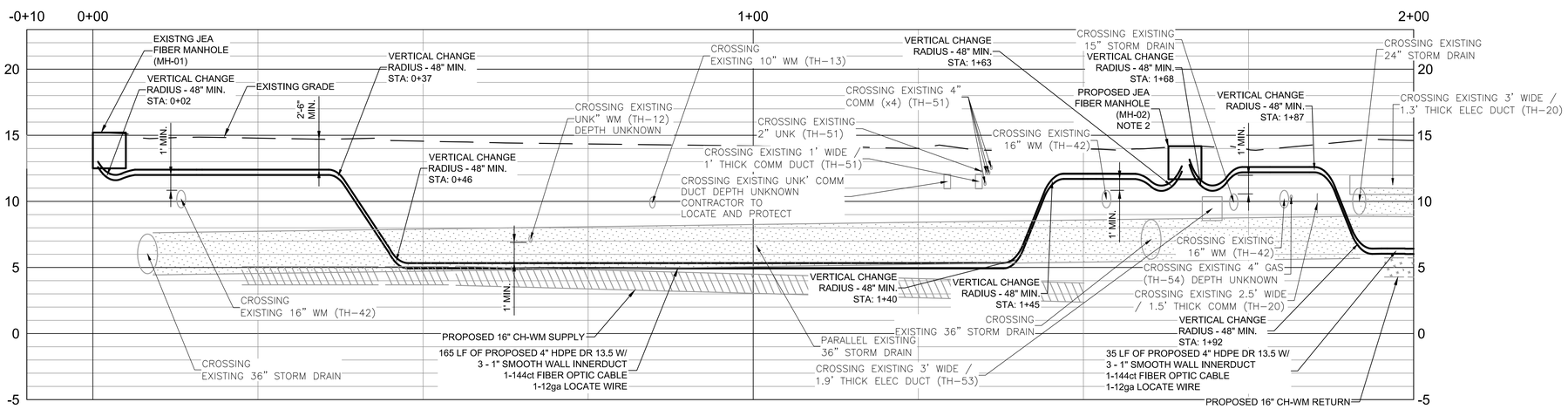

ISSUED FOR BID

MOTT MACDONALD
Mott MacDonald Florida, LLC
10245 Centurion Parkway North
Suite 300
Jacksonville, Florida 32256
Telephone: (904) 203-1090
Architects AA - C00000035
Engineers EB - 00001155
Surveyors LB - 0006783

NO.	BY	DATE	REVISIONS
6.			
5.			
4.			
3.			
2.			
1.			

DESIGN ENGINEER
FRANK WELLS
FLORIDA REGISTRATION NO. 73859

DESIGNER: F. WELLS
DRAWN BY: D. JACOBS
DATE: OCT 2020
CHECKED BY: W. PHILLIPS
DATE: OCT 2020

JEA Building Community

DOWNTOWN CHILLED WATER MAINS AND FIBER OPTIC CONDUITS
FIBER OPTIC CONDUIT - W. DUVAL ST.

PROJ. NO. 502100442-001
DATE: OCT 2020
SCALE: HORIZ: 1" = 10' VERT: 1" = 5'

NO. SHEETS 36
SHEET NO. E-3
DRAWING NO. E-1

C:\users\jce91951\appdata\local\projectwise\workdir\mott-use-pw-14\d0512199\E-1 Plan_Profile Sheets - Electrical.dwg Current Layout Tab = E-1 Thu Oct 22, 2020 - 11:05

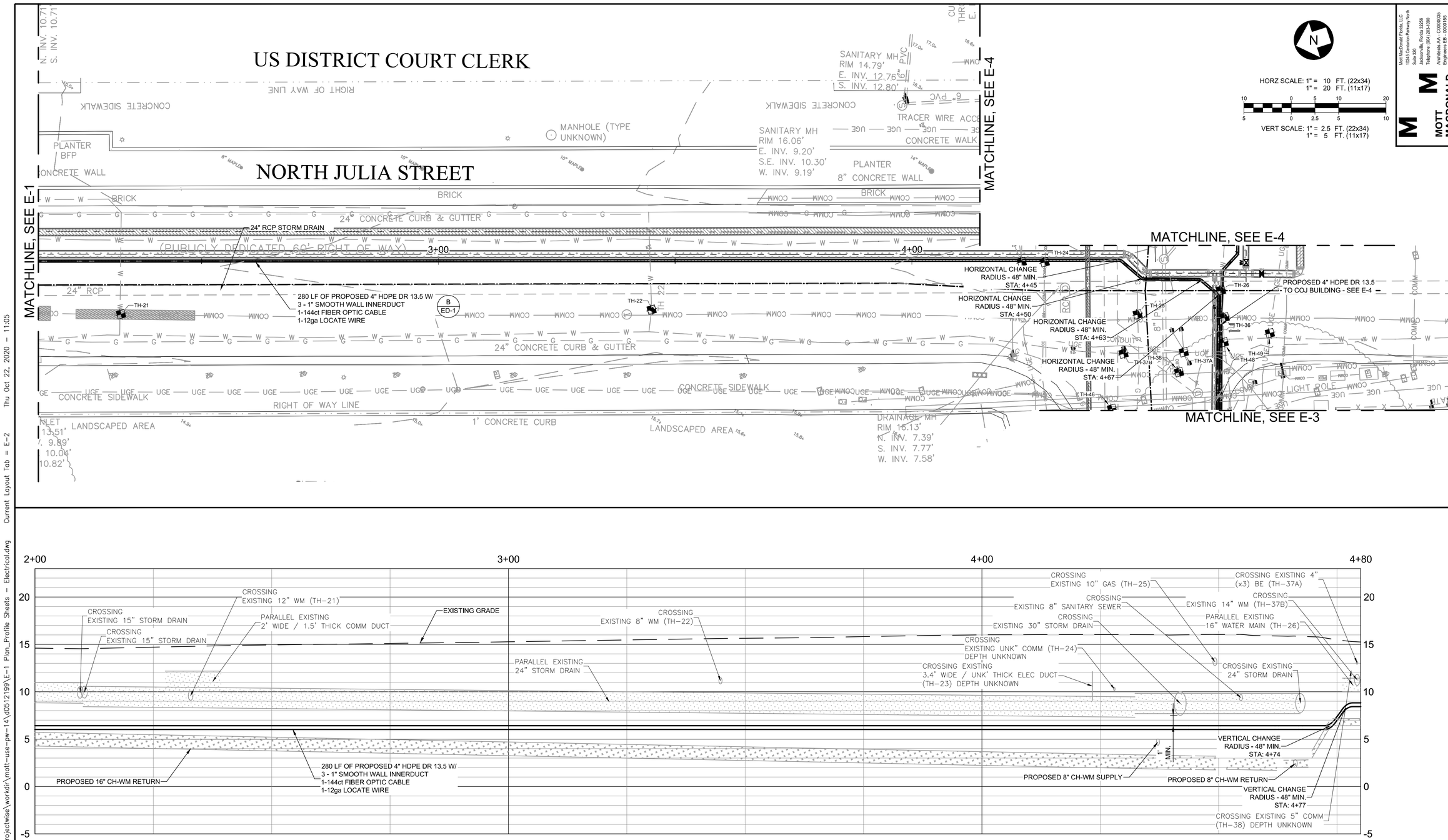

ISSUED FOR BID

Mott MacDonald Florida, LLC
10245 Centurion Parkway North
Suite 100
Jacksonville, Florida 32256
Telephone: (904) 205-1090
Architects AA - C0000035
Engineers EB - 0000155
Surveyors LB - 0006783
MOTT MACDONALD

NO.	BY	DATE	REVISIONS
5.			
4.			
3.			
2.			
1.			

DESIGN ENGINEER
FRANK WELLS
FLORIDA REGISTRATION NO. 73859

DESIGNER:	F. WELLS
DRAWN BY:	D. JACOBS
DATE:	OCT 2020
CHECKED BY:	W. PHILLIPS
DATE:	OCT 2020

JEA Building Community

DOWNTOWN CHILLED WATER MAINS AND FIBER OPTIC CONDUITS
FIBER OPTIC CONDUIT - N. JULIA ST.

PROJ. NO. 592100442-001
DATE: OCT 2020
SCALE: HORIZ: 1" = 10' VERT: 1" = 5'

NO. SHEETS PER SET 10
SHEET NO. 10
DRAWING NO. E-2

C:\users\jac91951\appdata\local\projectwise\workdir\mott-use-pw-14\d0512199\E-1 Plan_Profile Sheets - Electrical.dwg Current Layout Tab = E-2 Thu Oct 22, 2020 - 11:05

JEA HQ OFFICE BUILDING SITE

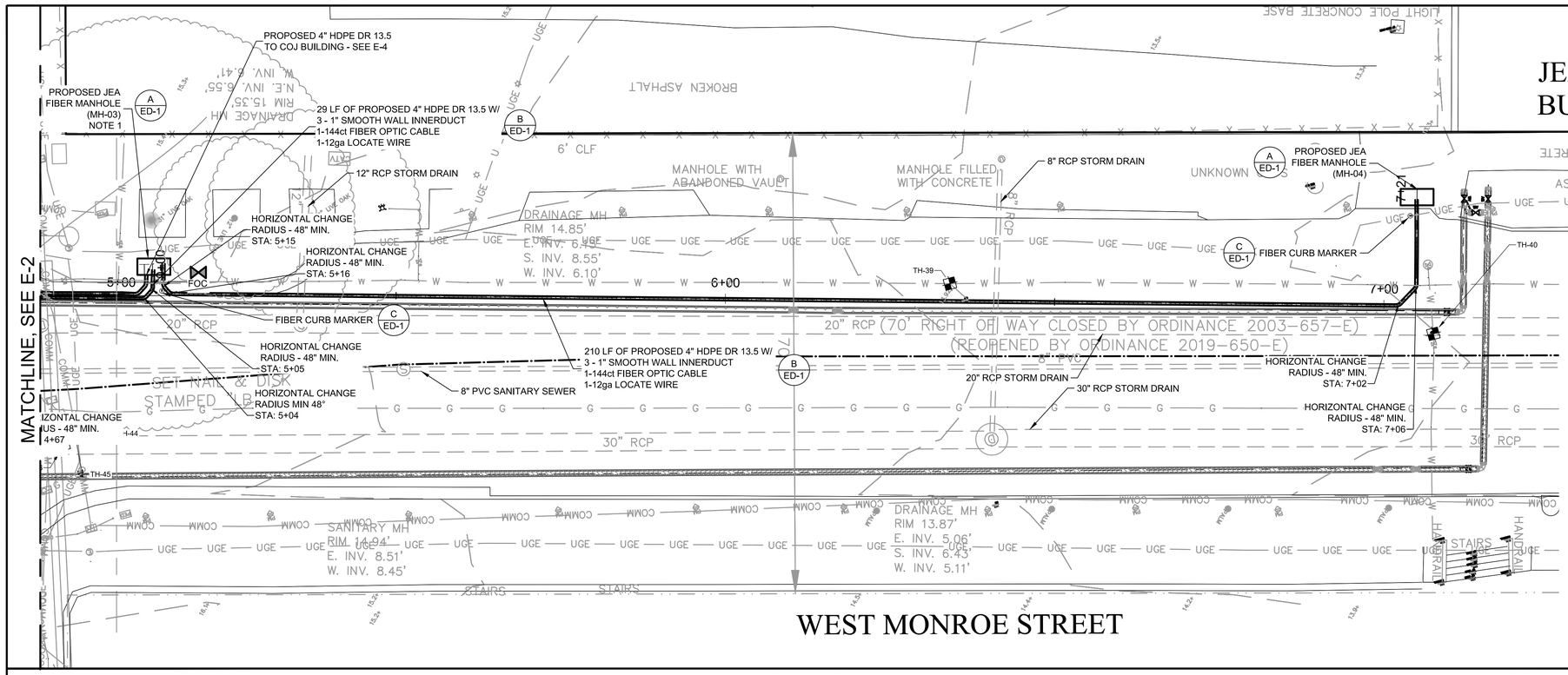

NOTES:

1) FIBER OPTIC SPLICE LOCATION. SPLICING DIAGRAMS WILL BE PROVIDED BY JEA.
2) PRELIMINARY ALIGNMENT FOR THE JEA HEADQUARTERS ELECTRICAL SERVICE FEEDER WILL BE BETWEEN THE 20-INCH RCP STORM DRAIN AND THE 8-INCH PVC SANITARY SEWER RUNNING EAST TO WEST ALONG WEST MONROE STREET. FURNISH AND INSTALLATION OF THIS 25-INCH WIDE BY 30-INCH HIGH CONCRETE ENCASED ELECTRICAL DUCT BANK WILL BE BY OTHERS, BUT COORDINATED DURING FURNISH AND INSTALLATION AND OPEN EXCAVATION OF THE JEA CHILLED WATER PIPING AND FIBER OPTIC CONDUIT SYSTEM. CONTRACTOR SHALL COORDINATE ACTIVITIES AND SCHEDULE WITH JEA MARK RESOS, (904) 424-2921, RESOM@JEA.COM.

HORZ SCALE: 1" = 10 FT. (22x34)
1" = 20 FT. (11x17)

VERT SCALE: 1" = 2.5 FT. (22x34)
1" = 5 FT. (11x17)

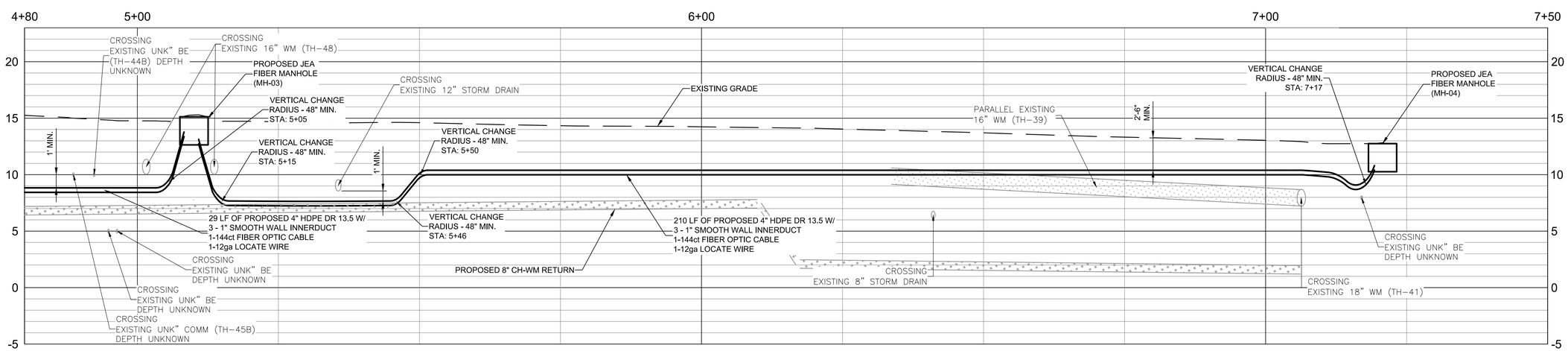

ISSUED FOR BID

MOTT MACDONALD
Mott MacDonald Florida, LLC
10245 Centurion Parkway North
Suite 100
Jacksonville, Florida 32256
Telephone: (904) 205-1090
Architects AA - C000003035
Engineers EB - 0000155
Surveyors LB - 0006783

NO.	BY	DATE	REVISIONS
5.			
4.			
3.			
2.			
1.			

DESIGN ENGINEER
FRANK WELLS
FLORIDA REGISTRATION NO. 73859

DESIGNER: F. WELLS
DRAWN BY: D. JACOBS
DATE: OCT 2020
CHECKED BY: W. PHILLIPS
DATE: OCT 2020

JEA Building Community

DOWNTOWN CHILLED WATER MAINS AND FIBER OPTIC CONDUITS
DOWNTOWN CHILLED WATER MAINS

PROJ. NO. 502100442-001
DATE: OCT 2020
SCALE: HORIZ: 1" = 10' VERT: 1" = 5'

NO. SHEETS 20
SHEET NO. 20
DRAWING NO. E-3

C:\users\jea91951\appdata\local\projectwise\workdir\mott-use-pw-14\d0512199\E-1 Plan_Profile Sheets - Electrical.dwg Current Layout Tab = E-3 Thu Oct 22, 2020 - 11:05

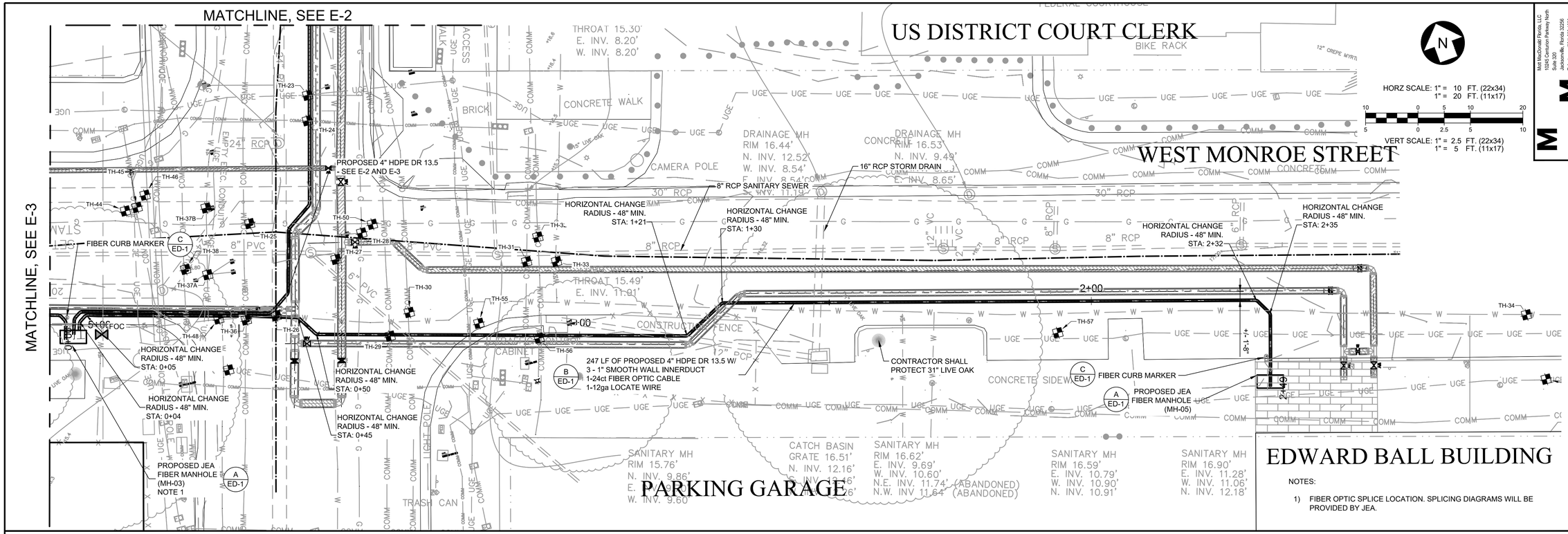

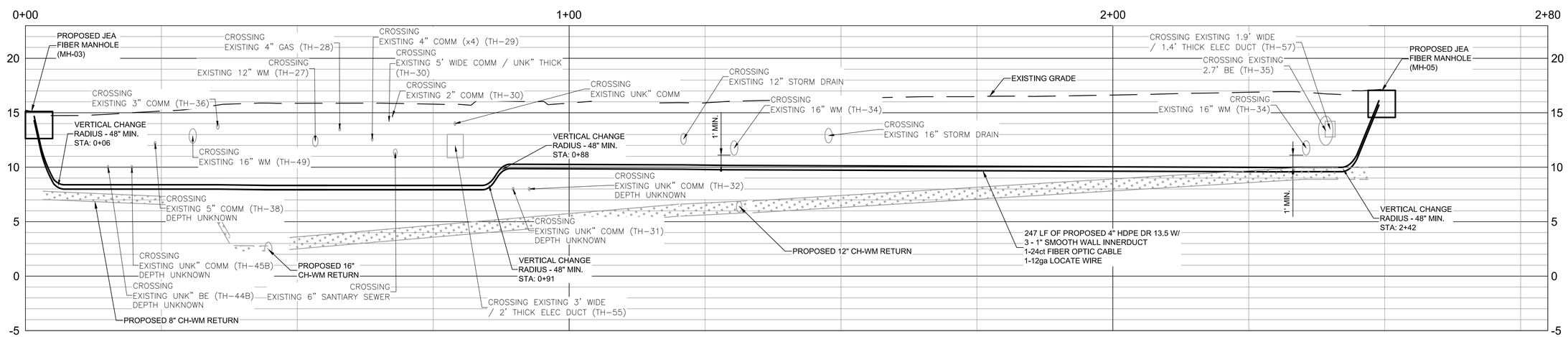

NOTES:

1) FIBER OPTIC SPLICE LOCATION. SPLICING DIAGRAMS WILL BE PROVIDED BY JEA.

ISSUED FOR BID

MOTT MACDONALD
Mott MacDonald Florida, LLC
12245 Centurion Parkway North
Suite 100
Jacksonville, Florida 32256
Telephone: (904) 203-1090
Architects AA - C00000035
Engineers EB - 0000155
Surveyors LB - 0006783

NO.	BY	DATE	REVISIONS
5.			
4.			
3.			
2.			
1.			

DESIGN ENGINEER
FRANK WELLS
FLORIDA REGISTRATION NO. 73859

DESIGNER:	F. WELLS
DRAWN BY:	D. JACOBS
DATE:	OCT 2020
CHECKED BY:	W. PHILLIPS
DATE:	OCT 2020

JEA Building Community

DOWNTOWN CHILLED WATER MAINS AND FIBER OPTIC CONDUITS
DOWNTOWN CHILLED WATER MAINS

PROJ. NO. 502100442-001
DATE: OCT 2020
SCALE: HORIZ: 1" = 10' VERT: 1" = 5'

NO. SHEETS IN SET 21
SHEET NO. 21
DRAWING NO. E-4

C:\users\jac91951\appdata\local\projectwise\workdir\mott-use-pw-14\d0512199\E-1 Plan_Profile Sheets - Electrical.dwg Current Layout Tab = E-4 Thu Oct 22, 2020 - 11:06

FIBER OPTIC CONSTRUCTION NOTES:

1. WORKSITE CLEANUP SHALL BE CONDUCTED ON A DAILY BASIS. TRENCHES, BORE PITS, OR DEPRESSIONS GREATER THAN 12" DEPTH SHALL BE BACKFILLED OR PROTECTED AT THE END OF EACH DAY.
2. BACKFILL MATERIAL SHALL BE CLEAN AND PLACED IN 12" LIFTS WITH APPROPRIATE EQUIPMENT TO 98% MINIMUM STANDARD DENSITY OR AS REQUIRED BY LOCAL AHJ.
3. CONSTRUCTION ACTIVITIES SHALL ADHERE TO JEA FIBER OPTIC STANDARDS FOR UNDERGROUND AND AERIAL INSTALLATION.
4. CONSTRUCTION ACTIVITIES SHALL BE PERFORMED IN STRICT ACCORDANCE WITH NEC, NESC, AND AHJ.
5. CONTRACTOR SHALL COIL, TAPE, AND PROTECT 150' OF SLACK FIBER OPTIC CABLE IN EACH MANHOLE LOCATION FOR FUTURE SPLICING AND EXTENSION AT THE DIRECTION OF THE OWNER.
6. CONTRACTOR SHALL PERFORM ALL FIBER OPTIC TESTING IN ACCORDANCE WITH JEA FIBER OPTIC STANDARDS INCLUDING BI-DIRECTIONAL OTDR AND OPTICAL RETURN LOSS WITH JEA APPROVED SOFTWARE/HARDWARE PACKAGES.
7. MINIMUM FIBER OPTIC CABLE BEND RADIUS DURING CONSTRUCTION SHALL BE GREATER THAN OR EQUAL TO MANUFACTURERS REQUIREMENTS.
8. MAXIMUM FIBER OPTIC CABLE PULLING TENSION DURING CONSTRUCTION SHALL BE LESS THAN OR EQUAL TO MANUFACTURERS REQUIREMENTS.
9. FIBER OPTIC CABLE PULLING LUBRICANT SHALL BE PROVIDED IN ACCORDANCE WITH JEA MASTER MATERIALS CATALOG ITEM NUMBER I.ADCMI004.
10. LOCATE WIRE SHALL BE ROUTED INTO EACH MANHOLE LOCATION. COIL, TAPE, AND PROTECT.

BILL OF MATERIALS		
DESCRIPTION	QUANTITY	PROVIDED BY
4-INCH HDPE DR-13.5	~ 956 FEET	CONTRACTOR
1-INCH INNERDUCT	~ 2,868 FEET	CONTRACTOR
FIBER MANHOLE (MANHO008)	4	JEA
CURB MARKER (MARCB001)	6	JEA
24 CT FIBER CABLE (CAIUF024)	~ 247 FEET	JEA
144 CT FIBER CABLE (CAIUF144)	~ 709 FEET	JEA

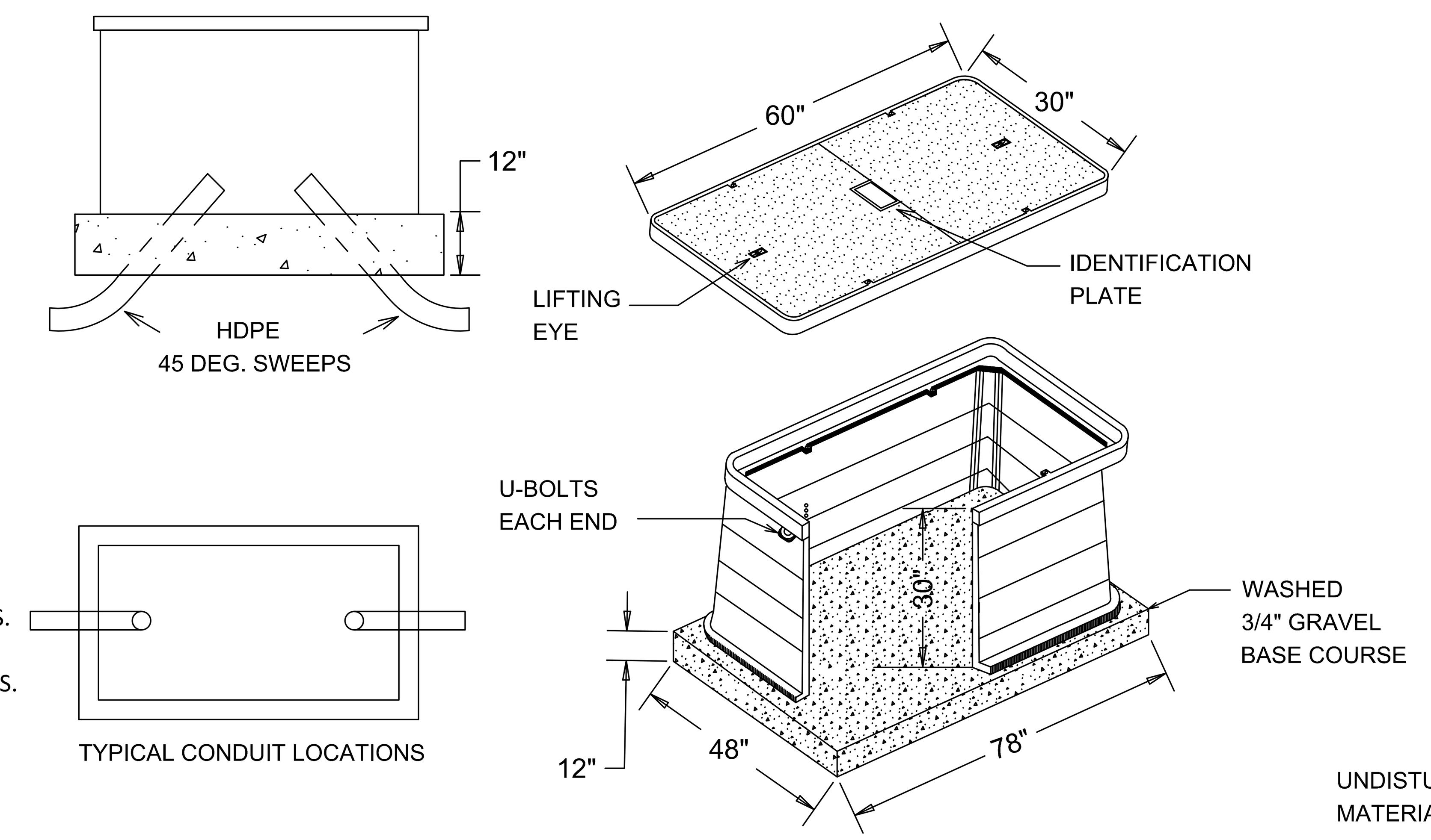

* BOX WEIGHT 267 LBS
* LID WEIGHT APPROX. 200 LBS
* CONDUIT ENDS SHALL BE FINISHED WITH BELL-ENDS OR COUPLINGS

A / - FIBER MANHOLE DETAIL (MANHO008)
NTS

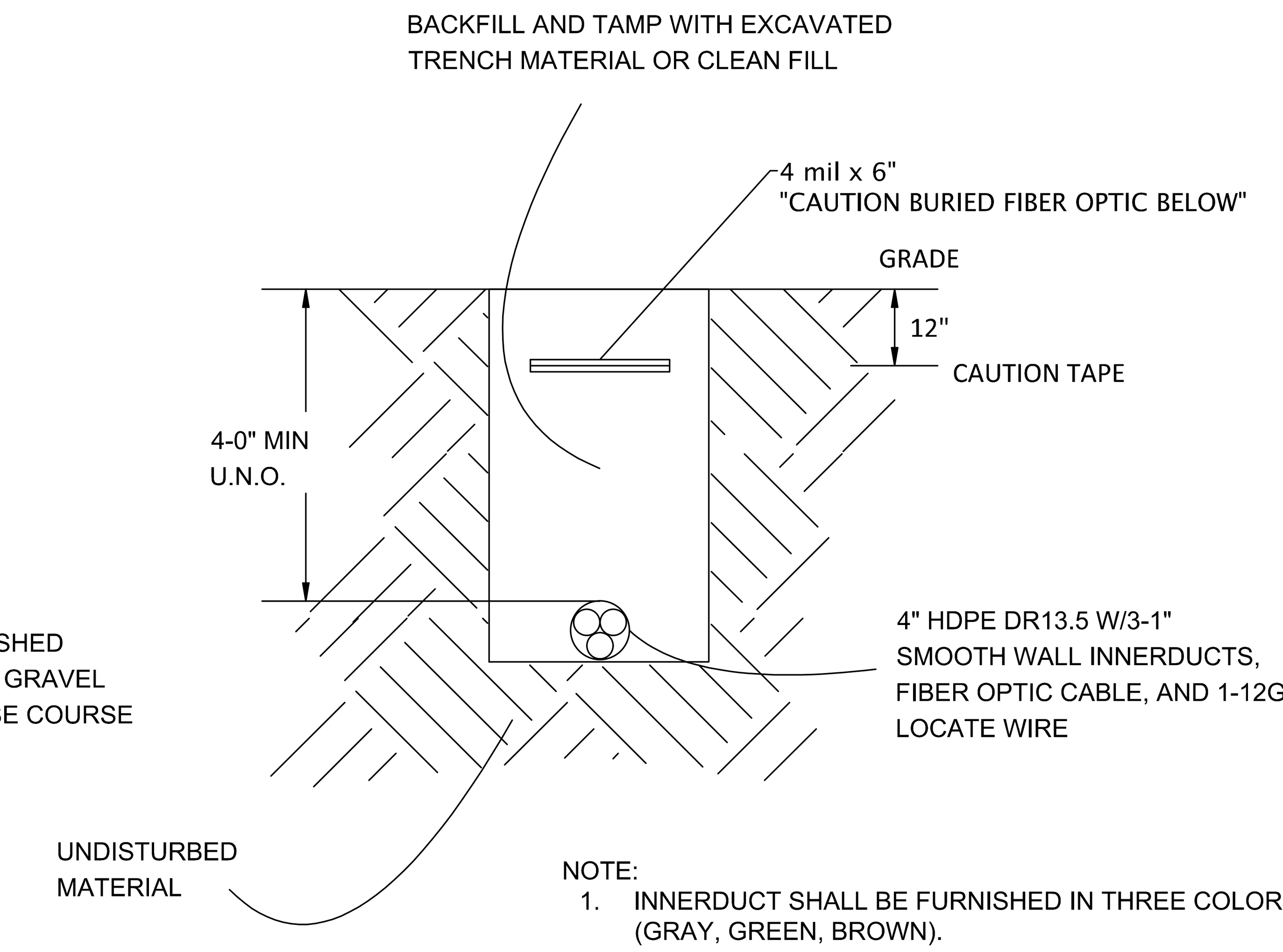

NOTE:
1. INNERDUCT SHALL BE FURNISHED IN THREE COLORS (GRAY, GREEN, BROWN).

B / - FIBER TRENCH DETAIL
NTS

CONTRACTOR SHALL MARK FIBER OPTIC MANHOLES AND HANDHOLES WITH A 2 1/2" ADHESIVE MARKER ON THE CURB DIRECTLY IN FRONT OF EACH MANHOLE OR HANDHOLE. IN THE EVENT THERE IS NO CURB AVAILABLE, THE MARKER SHALL BE INSTALLED ON THE PAVEMENT DIRECTLY IN FRONT OF EACH MANHOLE OR HANDHOLE.

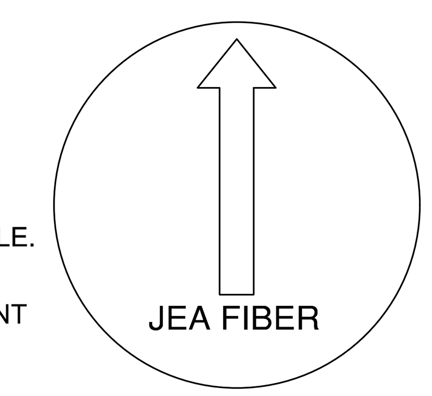

C / - FIBER CURB MARKER DETAIL (MARCB001)
NTS

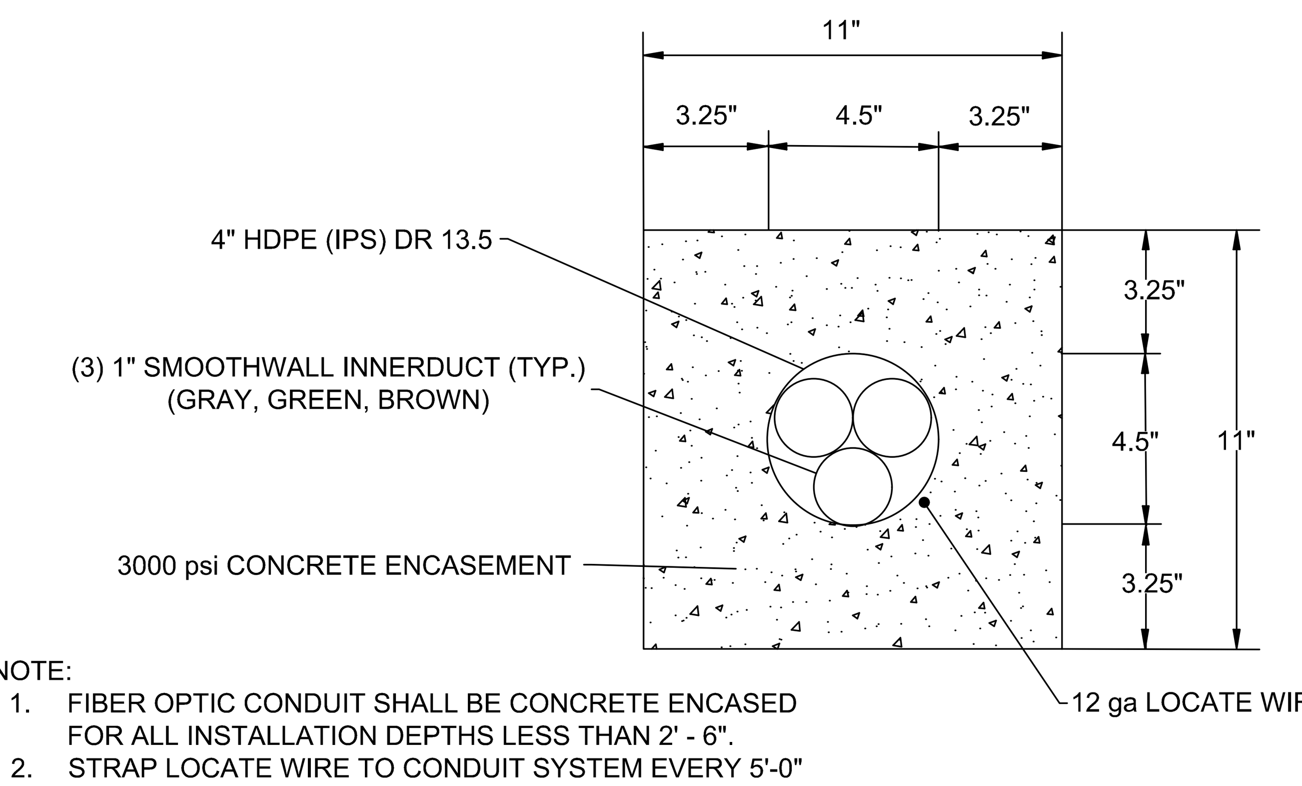

NOTE:
1. FIBER OPTIC CONDUIT SHALL BE CONCRETE ENCASED FOR ALL INSTALLATION DEPTHS LESS THAN 2' - 6".
2. STRAP LOCATE WIRE TO CONDUIT SYSTEM EVERY 5'-0" WITH 14 - 1/2 NYLON CABLE TIES.

D / - CONCRETE ENCASED CONDUIT DETAIL
NTS

ISSUED FOR BID

MOTT MACDONALD

REVISIONS

NO.	BY	DATE
6.		
5.		
4.		
3.		
2.		
1.		

DESIGN ENGINEER: FRANK WELLS
FLORIDA REGISTRATION NO. 73859

DESIGNER: F. WELLS
DRAWN BY: D. JACOBS
DATE: OCT 2020
CHECKED BY: W. PHILLIPS
DATE: OCT 2020

JEA Building Community

DOWNTOWN CHILLED WATER MAINS AND FIBER OPTIC CONDUITS
STANDARD ELECTRICAL DETAILS

PROJ. NO. 502100442-001
DATE: OCT 2020
SCALE: AS NOTED

NO. SHEETS 36
SHEET NO. 22
DRAWING NO. ED-1

C:\users\jac91951\appdata\local\projectwise\workdir\mott-use-pw-14\d0512199\ED-1 CHM.dwg Current Layout Tab = ED-1 Wed Oct 21, 2020 - 09:55
Xrefs Attached= JEA_SHT22x34_BOR WM [..\d0512226\JEA_SHT22x34_BOR CHM.dwg]

TEMPORARY TRAFFIC CONTROL GENERAL NOTES

1. ALL TTC SHALL BE IN CONFORMANCE WITH MUTCD STANDARDS.
2. CONTRACTOR SHALL NOTIFY THE CITY OF JACKSONVILLE TRAFFIC ENGINEERING DIVISION AT (904-255-7553) A MINIMUM OF 5 WORKING DAYS PRIOR TO IMPLEMENTATION OF THE TTC.
3. THE CONTRACTOR SHALL PROVIDE THE CITY OF JACKSONVILLE TRAFFIC ENGINEERING DIVISION WITH THE NAME OF THE PERSON ON THE CONTRACTOR'S STAFF DESIGNATED TO BE RESPONSIBLE FOR THE IMPLEMENTATION OF ALL PHASES OF TTC PRIOR TO THE BEGINNING OF CONSTRUCTION.
4. ANY EXISTING PAVEMENT MARKINGS WHICH ARE REMOVED FOR TTC PURPOSES SHALL BE REPLACED BEFORE COMPLETION OF THE PROJECT.
5. THE REFLECTIVE SHEETING ON SIGNS, DRUMS OR BARRICADES SCRATCHED OR DAMAGED TO THE POINT THAT REFLECTIVITY IS IMPAIRED SHALL BE REPLACED. DAMAGED, DEFACED OR DIRTY SIGNS, CONES OR BARRICADES SHALL IMMEDIATELY BE REPAIRED, REPLACED OR CLEANED BY THE CONTRACTOR.
6. THE CONTRACTOR SHALL BE RESPONSIBLE FOR PERFORMING FORMAL TTC INSPECTIONS AND SHALL IMMEDIATELY REPLACE ALL EQUIPMENT AND DEVICES NOT CONFORMING TO FDOT STANDARDS. THESE INSPECTIONS SHALL TAKE PLACE AT LEAST ONCE A DAY AND SOME OF THESE INSPECTIONS SHALL BE CONDUCTED AT NIGHT. THE JEA SHALL BE ADVISED OF THE SCHEDULE OF THE INSPECTIONS AND BE GIVEN THE OPPORTUNITY TO JOIN IN THE INSPECTION.
7. SHORT TERM STOPPING OR PARKING OF A VEHICLE, OR PLACING ANYTHING ELSE NEXT TO THE WORK AREA (FOR EXAMPLE, A STACK OF CONES, PARKED CONSTRUCTION EQUIPMENT/VEHICLES, ETC.) CREATES A CHANNEL EFFECT WHICH CAN ADVERSELY AFFECT TRAFFIC FLOW. THEREFORE, ALL CONSTRUCTION EQUIPMENT SHALL BE PLACED A MINIMUM OF 15 FEET FROM THE TRAVEL LANE WHEN NOT IN USE.
8. ALL DROP OFFS ALONG CONSTRUCTION WORK AREAS SHALL BE HANDLED AS PER STANDARD DRAWING INDEX 102-600 (FY20-21).
9. TRAFFIC CONDITIONS, ACCIDENTS AND OTHER EMERGENCY CONDITIONS MAY REQUIRE THE OWNER TO MODIFY ANY CHANNELIZATION SHOWN IN THESE PLANS, THE CONTRACTOR SHALL MAKE THE NECESSARY ADJUSTMENTS, AS DIRECTED BY THE CITY OF JACKSONVILLE TRAFFIC ENGINEERING DIVISION OR THE JEA, WITHOUT DELAY.
10. TEMPORARY PAVEMENT, IF REQUIRED, SHALL CONSIST OF 1" OF TYPE S-III OR S-1 ASPHALT ON 6" OF LIMEROCK.
11. DUST CONTROL MEASURES SHALL BE IMPLEMENTED ON ALL UNPAVED SURFACES UNTIL PAVED OR GROUND COVER IS ESTABLISHED.
12. THE CONTRACTOR SHALL RETURN THE GROUND TO ITS ORIGINAL CONDITION AND ELEVATION WHEN REMOVING ANY TEMPORARY PAVEMENT.
13. THE CONTRACTOR SHALL, AS REQUIRED, PROVIDE TEMPORARY DRAINAGE DURING CONSTRUCTION, AS NEEDED.
14. THE PROJECT WORK HOURS SHALL BE BETWEEN 7:00 PM TO 5:00 AM MONDAY THRU FRIDAY. SATURDAY AND SUNDAY BETWEEN FRIDAY MIDNIGHT AND MONDAY 5:00 AM. THIS AREA IS PART OF THE (CBD) CENTRAL BUSINESS DISTRICT.
15. THE CONTRACTOR SHALL CONFINE HIS ACTIVE WORK AREA TO NO MORE THAN ONE BLOCK AT A TIME.
16. THE JACKSONVILLE FIRE AND RESCUE COMMUNICATIONS CENTER (FRCC) SHALL BE NOTIFIED OF ROAD CLOSURES / DETOURS.

SPECIAL FLAGGER CONTROL NOTES

1. THE CONTRACTORS SELECTION OF MEANS, METHODS, TECHNIQUES AND SEQUENCE OF CONSTRUCTION MAY REQUIRE PERIODIC FLAGGER CONTROL.
2. IT MAY BE ADVISABLE TO EMPLOY FLAGGERS FOR THE SAFETY OF THE MOTORING PUBLIC WHEN MOVING EQUIPMENT AND HANDLING MATERIAL.
3. IT WILL BE INCUMBENT UPON THE CONTRACTOR TO DETERMINE WHEN HIS OR HER OPERATIONS REQUIRE FLAGGER CONTROL.

TEMPORARY TRAFFIC CONTROL HURRICANE NOTE

1. IN THE EVENT A HURRICANE IS THREATENING THE JACKSONVILLE AREA, IMPLEMENTATION OF THESE TTC PLANS SHALL BE HELD IN ABEYANCE UNTIL THE THREAT PASSES.

PEDESTRIAN ACCESS REQUIREMENTS

1. THE CITY OF JACKSONVILLE PROHIBITS MID-BLOCK CROSSING OF PEDESTRIANS. WHEN AN ALTERNATIVE ROUTE IS NOT FEASIBLE, CONTRACTOR SHALL PROVIDE AN ADA COMPLIANT PEDESTRIAN PATHWAY THROUGH THE WORK ZONE WHEN SIDEWALK IS CLOSED.
2. COSTS FOR PEDESTRIAN ACCESS SHALL BE INCLUDED IN THE LUMP SUM PRICE BID FOR TEMPORARY TRAFFIC CONTROL.
3. IF SIDEWALKS ARE DISTURBED AND HAVE TO BE REPLACED, ADA COMPLIANT RAMPS WITH DETECTABLE WARNINGS ARE TO BE INSTALLED IN ACCORDANCE WITH FDOT STANDARD PLANS.

CITY OF JACKSONVILLE TEMPORARY TRAFFIC CONTROL STANDARD NOTES

1. ACCESS FOR LOCAL TRAFFIC WITH DESTINATIONS WITHIN THE WORK AREA SHALL BE MAINTAINED TO THE EXTENT SAFETY WILL PERMIT.
2. ACCESS TO INTERSECTING SIDE STREETS, PRIVATE AND COMMERCIAL DRIVEWAYS SHALL BE MAINTAINED THROUGHOUT CONSTRUCTION.
3. ANY MODIFICATIONS TO THESE TEMPORARY TRAFFIC CONTROL PLANS SHALL BE SUBMITTED TO THE CITY OF JACKSONVILLE TRAFFIC ENGINEERING DIVISION FOR REVIEW AND APPROVAL PRIOR TO IMPLEMENTATION.
4. THE CONTRACTOR HAS THE OPTION TO SUBMIT ALTERNATIVE TRAFFIC CONTROL PLANS FOR APPROVAL BY THE THE CITY OF JACKSONVILLE TRAFFIC ENGINEERING DIVISION. ALTERNATE TRAFFIC CONTROL PLANS SHALL BE SIGNED AND SEALED BY A PROFESSIONAL ENGINEER REGISTERED IN THE STATE OF FLORIDA AND SHALL BE CONSISTENT WITH STANDARD TTC DESIGN PRACTICES. NO CONSTRUCTION ACTIVITY WILL BE ALLOWED UNTIL THE CONTRACTOR'S TTC PLANS ARE APPROVED IN WRITING.
5. THE ROADWAY SHALL BE RESTORED TO AT LEAST A LIMEROCK SURFACE BEFORE IT IS REOPENED TO TRAFFIC AND BEFORE THE CONTRACTOR MOVES TO THE NEXT CONSTRUCTION ZONE.
6. THE CONTRACTOR SHALL COORDINATE TRAFFIC SIGNAL OPERATION WITHIN THE TRAFFIC ENGINEERING DIVISION.
7. TRAFFIC SIGNAL LOOPS SHALL BE RESTORED TO PROPER OPERATION WITHIN 36 HOURS OF BEING DESTROYED OR DAMAGED. CONTACT THE TRAFFIC ENGINEERING DIVISION AT (904-255-7553) A MINIMUM OF 48 HOURS PRIOR TO CUTTING ANY VEHICLE LOOPS.
8. TRAFFIC SIGNAL ACTUATION SHALL BE MAINTAINED AT ALL TIMES, UNLESS OTHERWISE APPROVED BY THE TRAFFIC ENGINEERING DIVISION. INFRARED-DETECTION MAY BE USED IF REQUIRED.
9. THE CONTRACTOR SHALL COORDINATE TEMPORARY AND PERMANENT PAVEMENT MARKING REPLACEMENT WITH COJ TRAFFIC ENGINEERING DIVISION.
10. ALL ROAD CLOSURES SHALL BE COORDINATED WITH COJ TRAFFIC ENGINEERING DIVISION A MINIMUM OF 7 DAYS OF NOTICE SHALL BE GIVEN FOR EACH CLOSURE.

TEMPORARY TRAFFIC CONTROL SIGNING NOTES

1. THE CONTRACTOR SHALL CONFIRM THAT EXISTING SIGNAGE WILL NOT POSE A CONFLICT FOR WORK ZONE TRAFFIC CONTROL. THE CONTRACTOR SHALL COVER OR REMOVE ALL SIGNAGE IN CONFLICT WITH THE TRAFFIC CONTROL DURING CONSTRUCTION OPERATIONS.
2. THE EXISTING POSTED SPEED LIMIT SIGNS SHALL REMAIN THROUGHOUT ALL PHASES UNLESS OTHERWISE NOTED. THE CONTRACTOR MAY ADD ORANGE AND BLACK ADVISORY SPEED PLATES TO EXISTING SPEED LIMIT SIGNS.
3. ANY EXISTING STREET AND ROAD NAME SIGNS THAT ARE IMPACTED BY CONSTRUCTION SHALL BE TEMPORARILY RELOCATED AND KEPT VISIBLE AT ALL TIMES FOR THE FACILITATION OF ACCESS BY EMERGENCY VEHICLE TRAFFIC.
4. CONTRACTOR MUST MAINTAIN EXISTING SIGNING. IF SIGNS ARE DAMAGED DUE TO HIS ACTIVITY, THE CONTRACTOR IS REQUIRED TO REPLACE THEM IN ACCORDANCE WITH CURRENT CITY STANDARD SPECIFICATIONS AT NO ADDITIONAL COST TO JEA.

TTC LEGEND

WORK ZONE

TYPE III BARRICADE

TEMPORARY TRAFFIC CONTROL SIGN

WORK ZONE SIGN

THIS DOCUMENT HAS BEEN DIGITALLY SIGNED AND SEALED BY Claro N. Magpantay, P.E. ON

PRINTED COPIES OF THIS DOCUMENT ARE NOT CONSIDERED SIGNED AND SEALED. THE SIGNATURE MUST BE VERIFIED ON THE ELECTRONIC DOCUMENTS.

C&ES
CONSTRUCTION & ENGINEERING SERVICES CONSULTANTS, INC.
9432 BAYMEADOWS ROAD, SUITE 100
JACKSONVILLE, FL 32256
CERTIFICATE OF AUTHORIZATION #27598
E.O.R.: Claro N. Magpantay, P.E., No. 60164

THE ABOVE NAMED PROFESSIONAL ENGINEER SHALL BE RESPONSIBLE FOR THE FOLLOWING SHEETS IN ACCORDANCE WITH RULE 61G15-23.004, F.A.C.: GS-1 TO GS-2 & TTC-1 TO TTC-12

CLARO NACU MAGPANTAY
LICENSE
No. 60164
STATE OF
FLORIDA
PROFESSIONAL ENGINEER

ISSUED FOR BID

Mott MacDonald Florida, LLC
10245 Centurion Parkway North
Suite 320
Jacksonville, Florida 32256
Telephone: (904) 203-1090
Architects AA - C0000035
Engineers EB - 0000155
Surveyors LB - 0006783

MOTT MACDONALD

C&ES
Construction & Engineering Services Consultants, Inc.
9432 Baymeadows Road, Suite 100
Jacksonville, FL 32256
Tel: (904) 652-1186
Business Number CA 27598

REVISIONS		
NO.	BY	DATE
6.		
5.		
4.		
3.		
2.		
1.		

DESIGN ENGINEER
CLARO NACU MAGPANTAY, P.E.
FLORIDA REGISTRATION NO.
60164

DESIGNER:	MAGPANTAY
DRAWN BY:	PACE
DATE:	OCT 2020
CHECKED BY:	GRAY
DATE:	OCT 2020

JEA Building Community

DOWNTOWN CHILLED WATER MAINS AND FIBER OPTIC CONDUITS

TEMPORARY TRAFFIC CONTROL NOTES AND LEGEND

PROJ. NO. 502100442
DATE: OCT 2020
SCALE: NONE

NO. SHEETS 36
SHEET NO. 23
DRAWING NO. GS-1

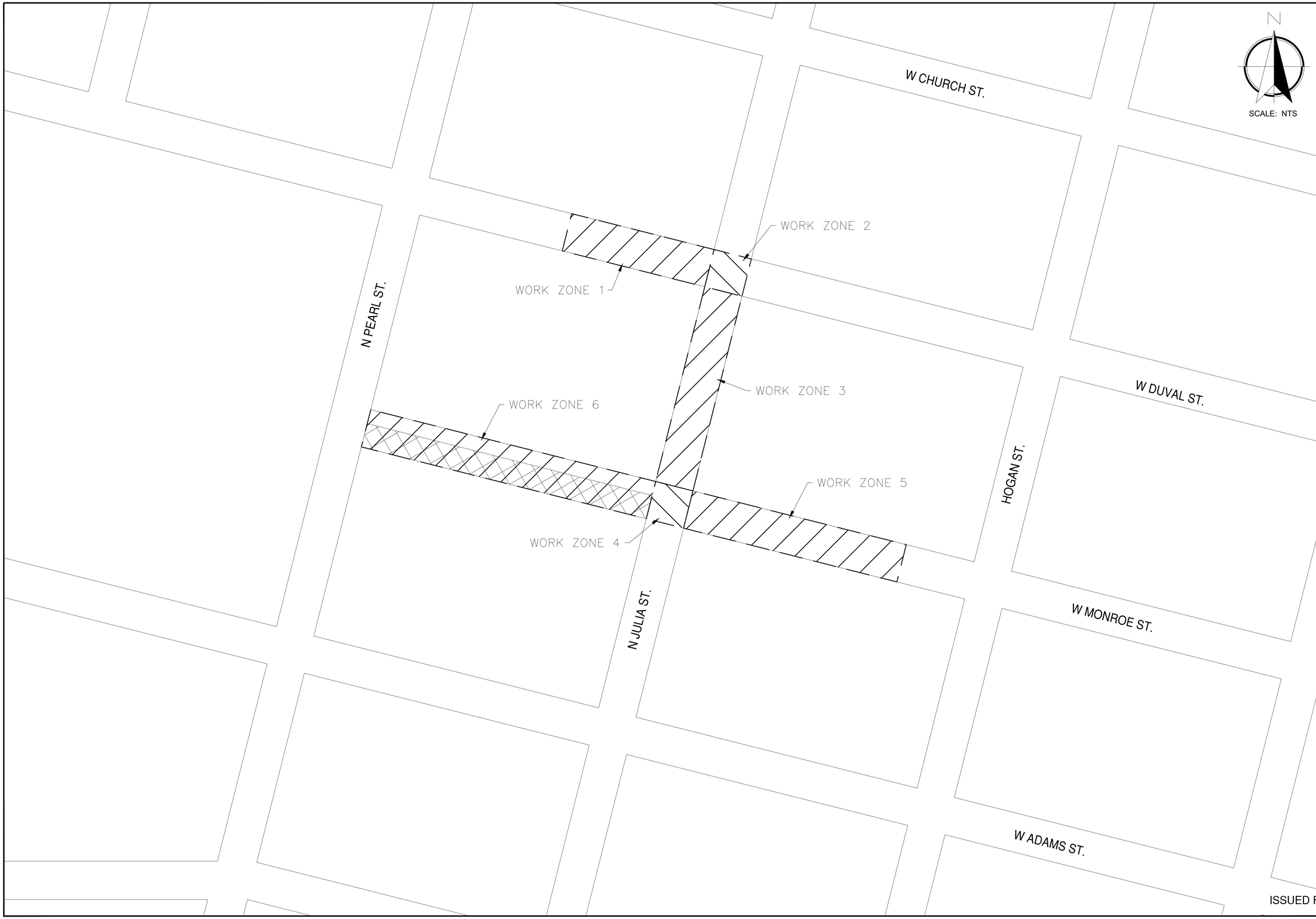

ISSUED FOR BID

Mott MacDonald Florida, LLC
10245 Centurion Parkway North
Suite 320
Jacksonville, Florida 32256
Telephone: (904) 203-1090
Architects AA - C000002OS
Engineers EB - 0000155
Surveyors LB - 0000783

MOTT MACDONALD

C&ES
Construction & Engineering Services Consultants, Inc.
9432 Baymeadows Road, Suite 100
Jacksonville, FL 32256
Tel: (904) 652-1186
Business Number CA 27598

NO.	BY	DATE	REVISIONS
6.			
5.			
4.			
3.			
2.			
1.			

DESIGN ENGINEER
CLARO NACU MAGPANTAY, P.E.
FLORIDA REGISTRATION NO.
60164

DESIGNER:	MAGPANTAY
DRAWN BY:	PACE
DATE:	OCT 2020
CHECKED BY:	GRAY
DATE:	OCT 2020

JEA Building Community

DOWNTOWN CHILLED WATER MAINS AND FIBER OPTIC CONDUITS

TTC WORK ZONE OVERALL MAP

PROJ. NO. 502100442
DATE: OCT 2020
SCALE: NONE

NO. SHEETS 36
SHEET NO. 24
DRAWING NO. CS-2

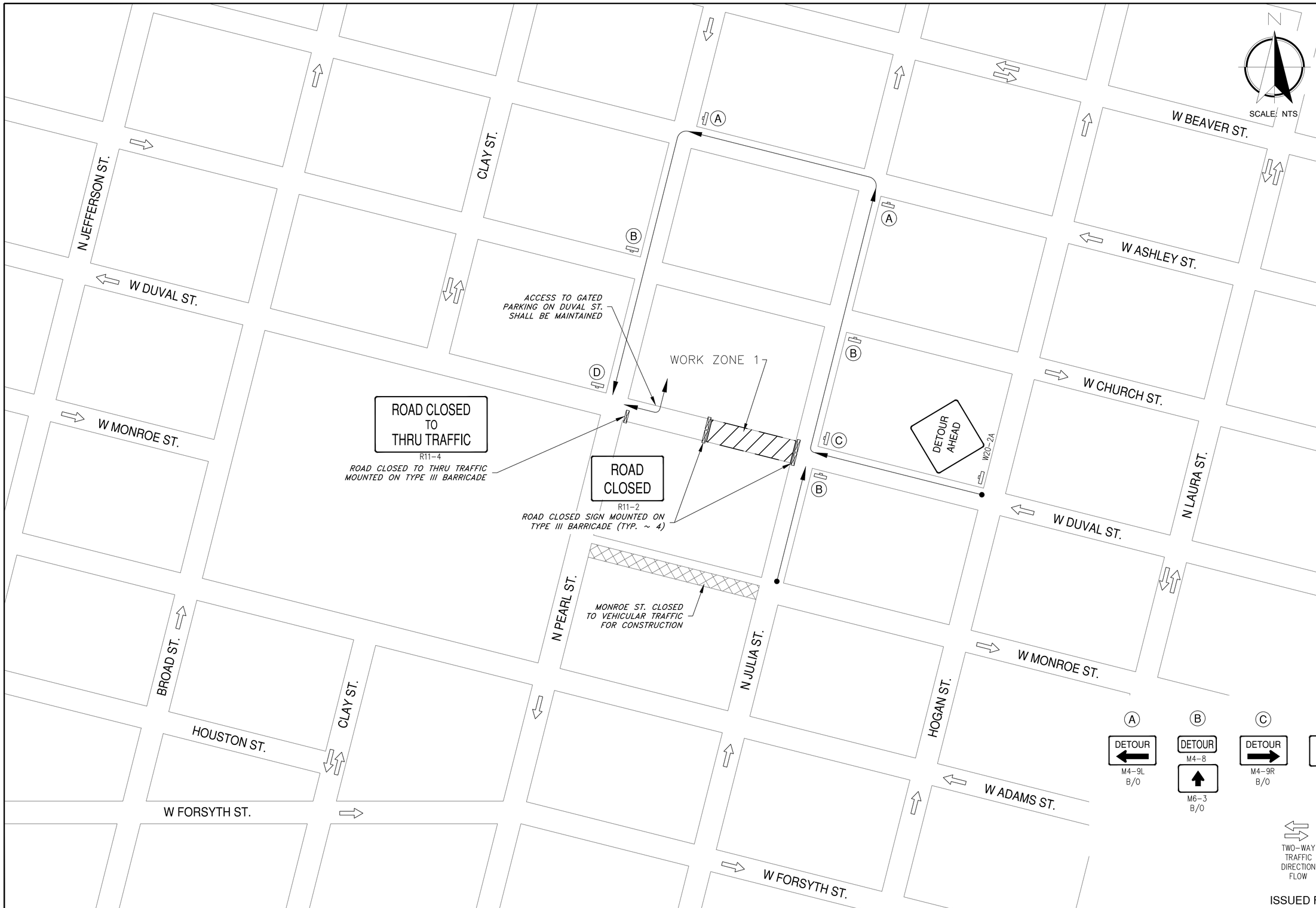

ISSUED FOR BID

Mott MacDonald Florida, LLC
10245 Centurion Parkway North
Suite 320
Jacksonville, Florida 32256
Telephone: (904) 203-1080
Architects AA - C0000035
Engineers EB - 0000155
Surveyors LB - 0000763

MOTT MACDONALD

C&ES
Construction & Engineering Services Consultants, Inc.
9432 Baymeadows Road, Suite 100
Jacksonville, FL 32256
Tel: (904) 652-1186
Business Number CA 27598

NO.	BY	DATE	REVISIONS
6.			
5.			
4.			
3.			
2.			
1.			

DESIGN ENGINEER
CLARO NACU MAGPANTAY, P.E.
FLORIDA REGISTRATION NO.
60164

DESIGNER:	MAGPANTAY
DRAWN BY:	PACE
DATE:	OCT 2020
CHECKED BY:	GRAY
DATE:	OCT 2020

JEA Building Community

DOWNTOWN CHILLED WATER MAINS AND FIBER OPTIC CONDUITS

VEHICULAR TTC PLAN - WORK ZONE 1

PROJ. NO. 502100442
DATE: OCT 2020
SCALE: NONE

NO. SHEETS 36
SHEET NO. 25
DRAWING NO. TTC-1

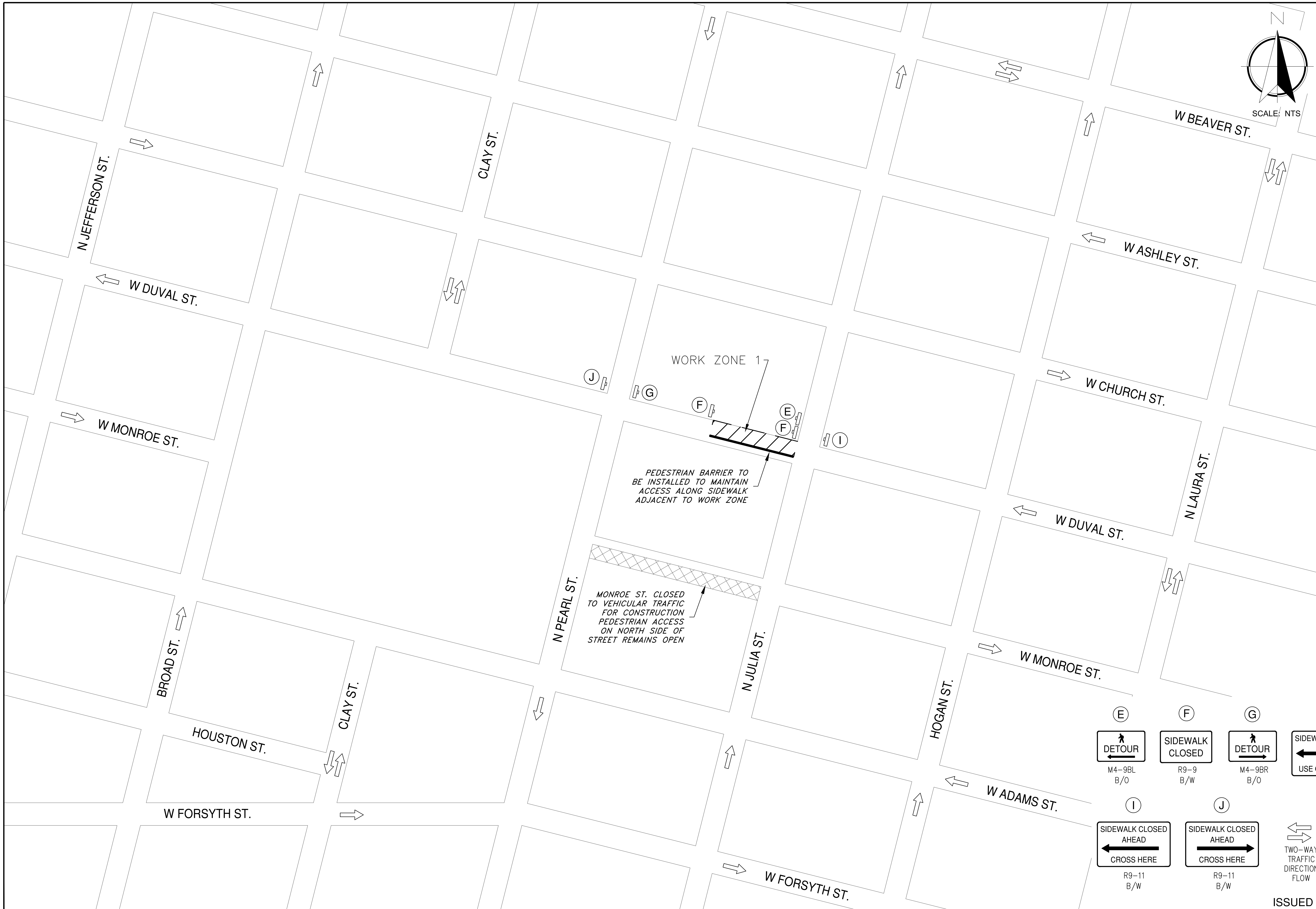

ISSUED FOR BID

Mott MacDonald Florida, LLC
10245 Centurion Parkway North
Suite 320
Jacksonville, Florida 32256
Telephone: (904) 203-1090
Architects AA - C0000035
Engineers EB - 0000155
Surveyors LB - 0006783

MOTT MACDONALD

C&ES
Construction & Engineering Services Consultants, Inc.
9432 Baymeadows Road, Suite 100
Jacksonville, FL 32256
Tel: (904) 652-1186
Business Number CA 27598

REVISIONS		
NO.	BY	DATE
6.		
5.		
4.		
3.		
2.		
1.		

DESIGN ENGINEER
CLARO NACU MAGPANTAY, P.E.
FLORIDA REGISTRATION NO.
60164

DESIGNER:	MAGPANTAY
DRAWN BY:	PACE
DATE:	OCT 2020
CHECKED BY:	GRAY
DATE:	OCT 2020

JEA Building Community

DOWNTOWN CHILLED WATER MAINS AND FIBER OPTIC CONDUITS

PEDESTRIAN TTC PLAN - WORK ZONE 1

PROJ. NO. 502100442
DATE: OCT 2020
SCALE: NONE

NO. SHEETS 36
SHEET NO. 26
DRAWING NO. TTC-2

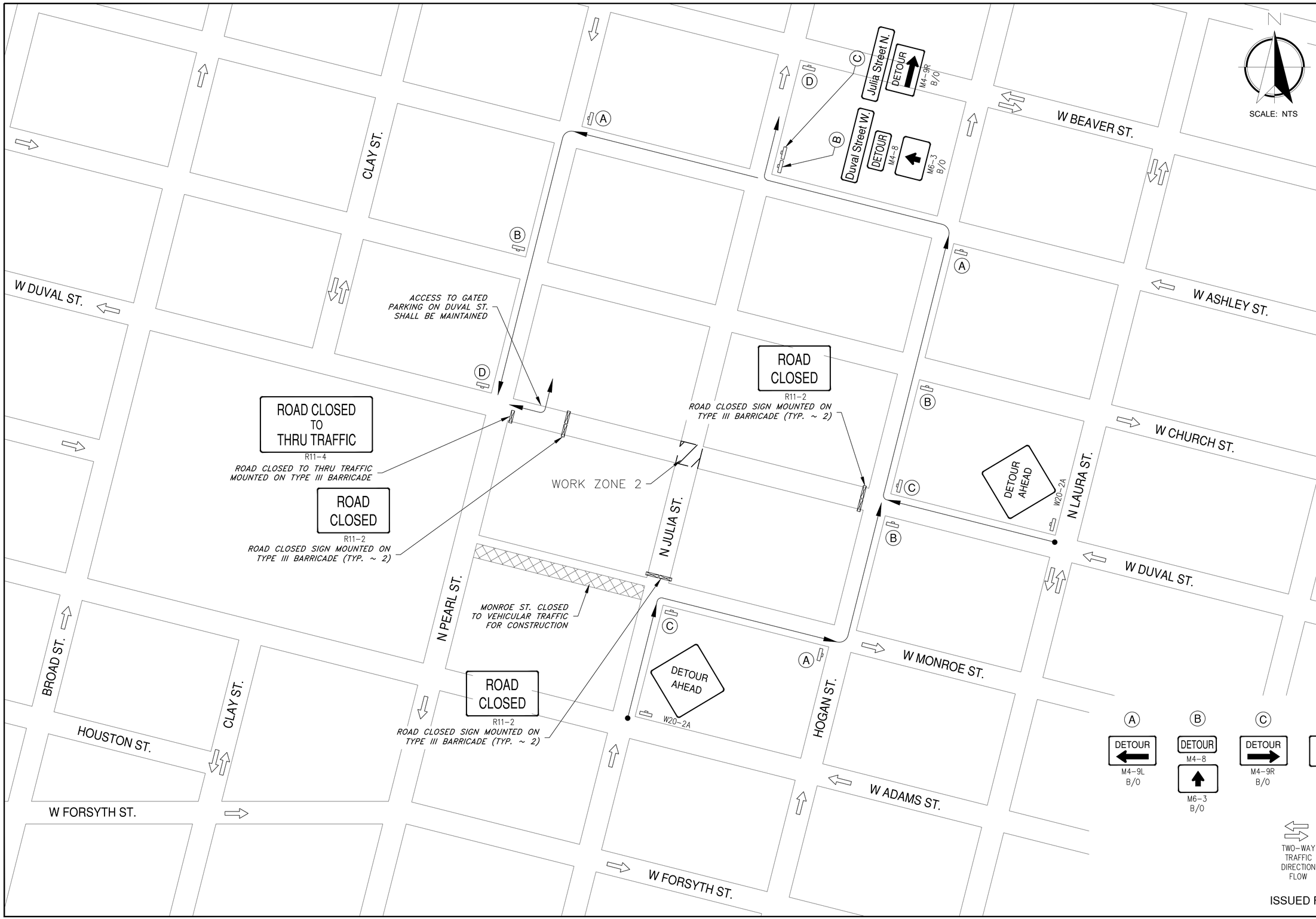

ISSUED FOR BID

Mott MacDonald Florida, LLC
10245 Centurion Parkway North
Suite 320
Jacksonville, Florida 32256
Telephone: (904) 203-1090
Architects AA - C0000035
Engineers EB - 0000155
Surveyors LB - 0000763

MOTT MACDONALD

REVISIONS

NO.	BY	DATE
6.		
5.		
4.		
3.		
2.		
1.		

C&ES
Construction & Engineering Services Consultants, Inc.
9432 Baymeadows Road, Suite 100
Jacksonville, FL 32256
Tel: (904) 652-1186
Business Number CA 27598

DESIGN ENGINEER
CLARO NACU MAGPANTAY, P.E.
FLORIDA REGISTRATION NO.
60164

DESIGNER:	MAGPANTAY
DRAWN BY:	PACE
DATE:	OCT 2020
CHECKED BY:	GRAY
DATE:	OCT 2020

JEA Building Community

DOWNTOWN CHILLED WATER MAINS AND FIBER OPTIC CONDUITS

VEHICULAR TTC PLAN - WORK ZONE 2

PROJ. NO. 592100442
DATE: OCT 2020
SCALE: NONE

NO. SHEETS 36
SHEET NO. 27
DRAWING NO. TTC-3

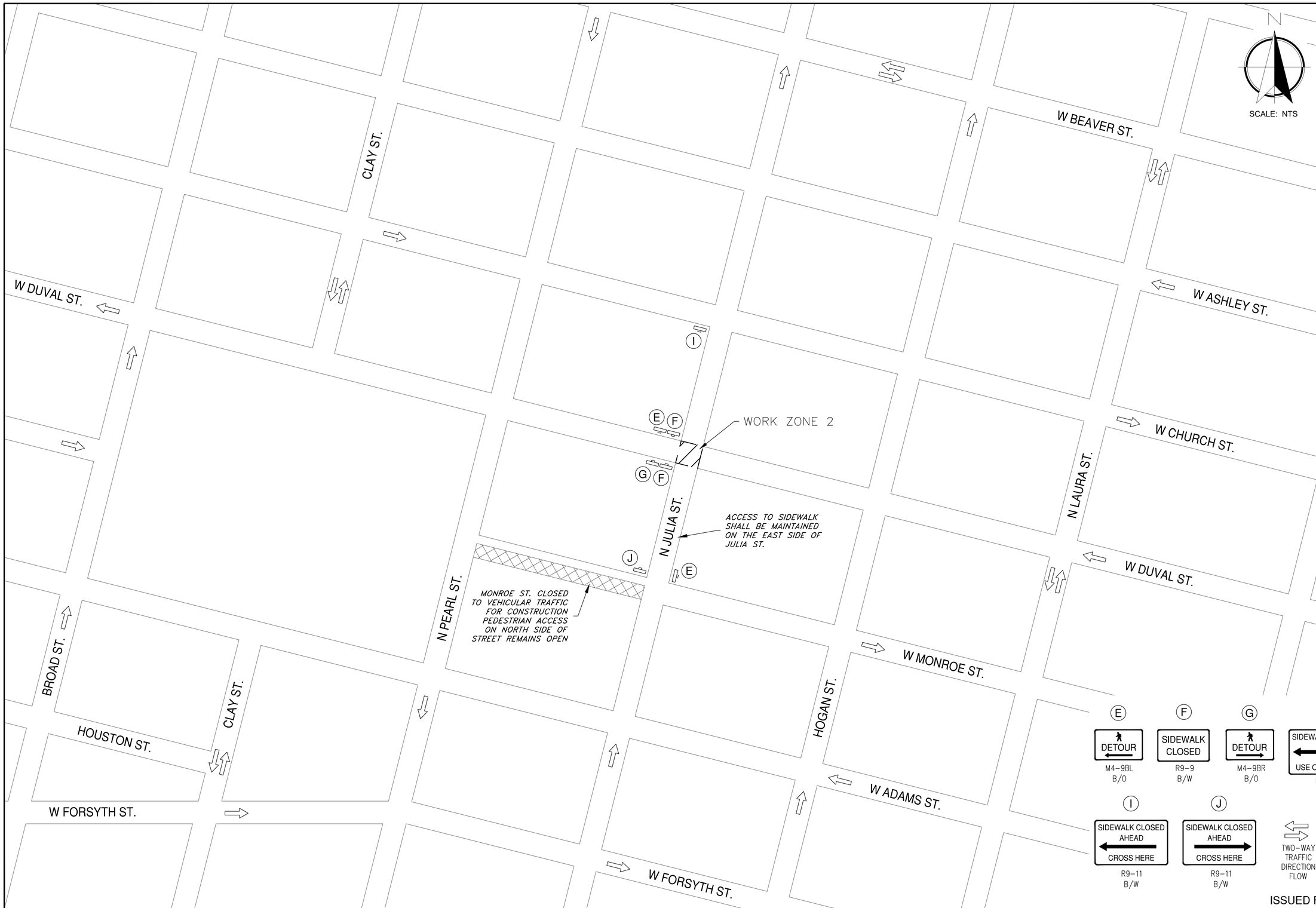

ISSUED FOR BID

Construction & Engineering Services Consultants, Inc.
9432 Baymeadows Road, Suite 100
Jacksonville, FL 32256
Tel: (904) 652-1186
Business Number CA 27598

Mott MacDonald Florida, LLC
10245 Centurion Parkway North
Suite 320
Jacksonville, Florida 32256
Telephone: (904) 203-1090
Architects AA - C0000235
Engineers EB - 0000155
Surveyors LB - 0000763

MOTT MACDONALD

NO.	BY	DATE	REVISIONS
6.			
5.			
4.			
3.			
2.			
1.			

DESIGN ENGINEER
CLARO NACU MAGPANTAY, P.E.
FLORIDA REGISTRATION NO.
60164

DESIGNER:	MAGPANTAY
DRAWN BY:	PACE
DATE:	OCT 2020
CHECKED BY:	GRAY
DATE:	OCT 2020

JEA Building Community

DOWNTOWN CHILLED WATER MAINS AND FIBER OPTIC CONDUITS

PEDESTRIAN TTC PLAN - WORK ZONE 2

PROJ. NO. 502100442
DATE: OCT 2020
SCALE: NONE

NO. SHEETS 36
SHEET NO. 28
DRAWING NO. TTC-4

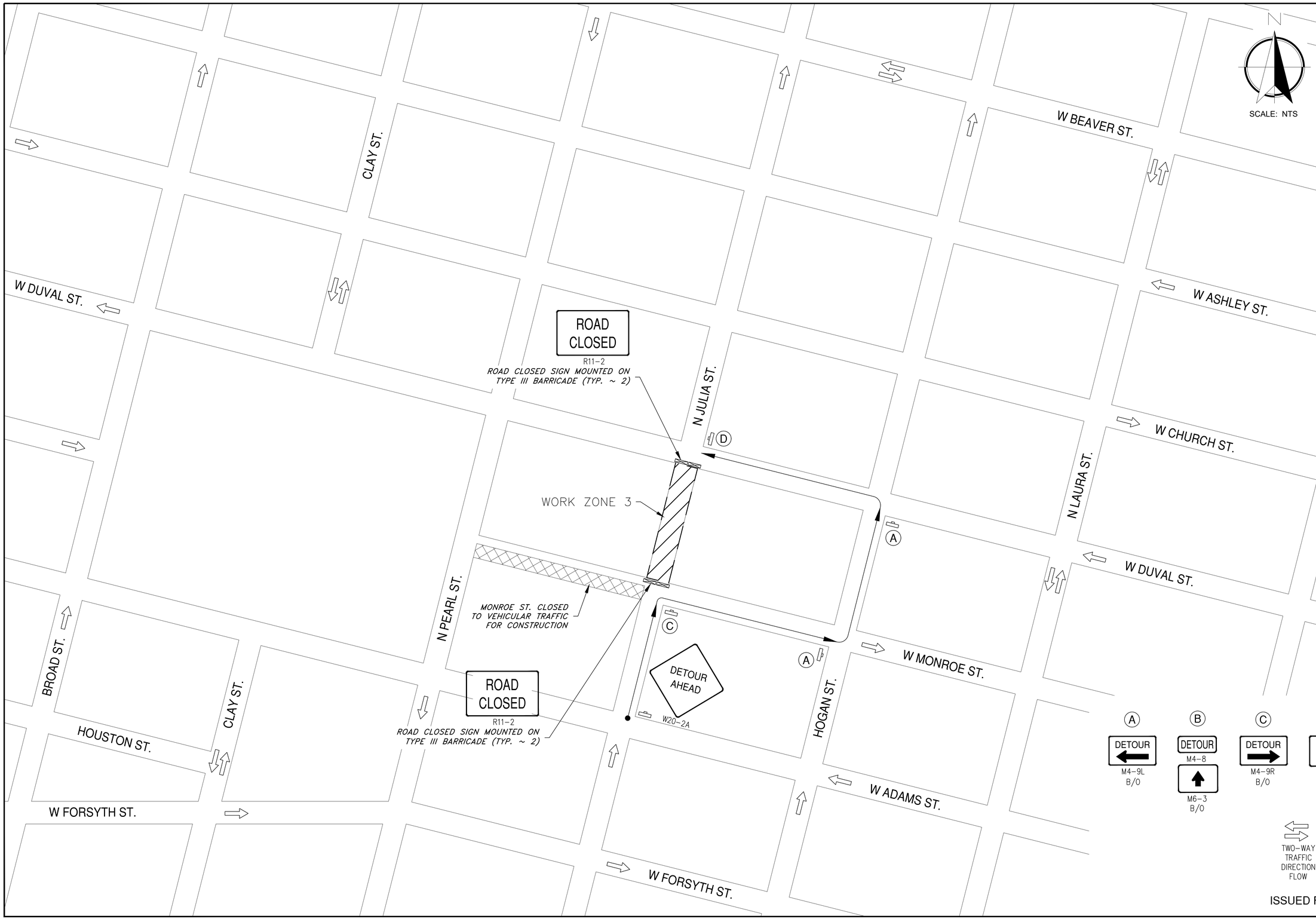

ISSUED FOR BID

Construction & Engineering Services Consultants, Inc.
9432 Baymeadows Road, Suite 100
Jacksonville, FL 32256
Tel: (904) 652-1186
Business Number CA 27598

Mott MacDonald Florida, LLC
10245 Centurion Parkway North
Suite 320
Jacksonville, Florida 32256
Telephone: (904) 203-1090
Architects AA - C0000035
Engineers EB - 0000155
Surveyors LB - 0000763

MOTT MACDONALD

NO.	BY	DATE	REVISIONS
6.			
5.			
4.			
3.			
2.			
1.			

DESIGN ENGINEER
CLARO NACU MAGPANTAY, P.E.
FLORIDA REGISTRATION NO.
60164

DESIGNER:	MAGPANTAY
DRAWN BY:	PACE
DATE:	OCT 2020
CHECKED BY:	GRAY
DATE:	OCT 2020

JEA Building Community

DOWNTOWN CHILLED WATER MAINS AND FIBER OPTIC CONDUITS

VEHICULAR TTC PLAN - WORK ZONE 3

PROJ. NO. 502100442
DATE: OCT 2020
SCALE: NONE

NO. SHEETS 36
SHEET NO. 29
DRAWING NO. TTC-5

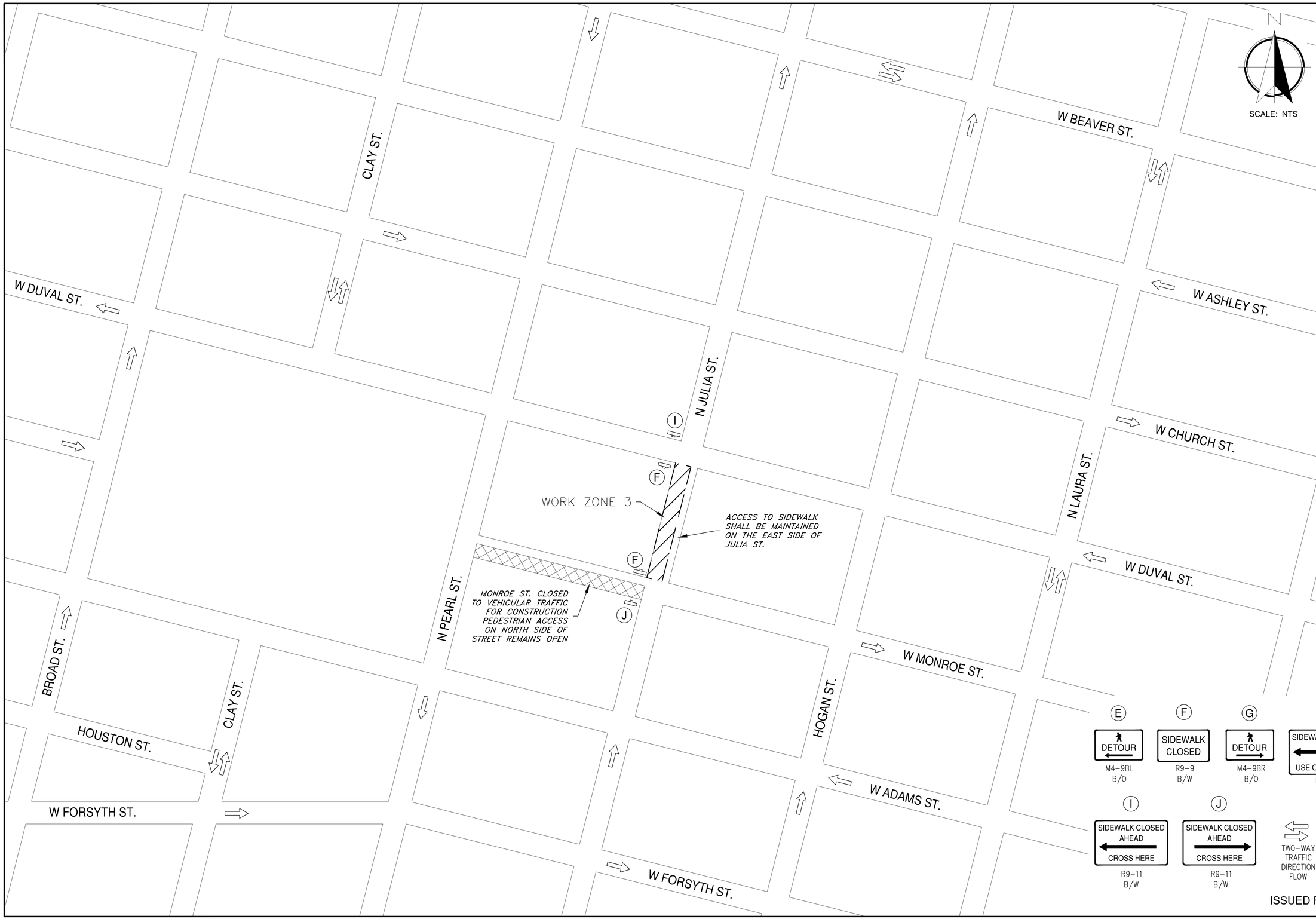

Mott MacDonald Florida, LLC
10245 Centurion Parkway North
Suite 320
Jacksonville, Florida 32256
Telephone: (904) 203-1090
Architects AA - C0000035
Engineers EB - 0000155
Surveyors LB - 0000763

MOTT MACDONALD

Construction & Engineering Services Consultants, Inc.
9432 Baymeadows Road, Suite 100
Jacksonville, FL 32256
Tel: (904) 652-1186
Business Number CA 27598

C&ES

NO.	BY	DATE	REVISIONS
6.			
5.			
4.			
3.			
2.			
1.			

DESIGN ENGINEER
CLARO NACU MAGPANTAY, P.E.
FLORIDA REGISTRATION NO.
60164

DESIGNER:	MAGPANTAY
DRAWN BY:	PACE
DATE:	OCT 2020
CHECKED BY:	GRAY
DATE:	OCT 2020

JEA Building Community sm

DOWNTOWN CHILLED WATER MAINS AND FIBER OPTIC CONDUITS

PEDESTRIAN TTC PLAN - WORK ZONE 3

PROJ. NO. 502100442
DATE: OCT 2020
SCALE: NONE

NO. SHEETS 36
SHEET NO. 30
DRAWING NO. TTC-6

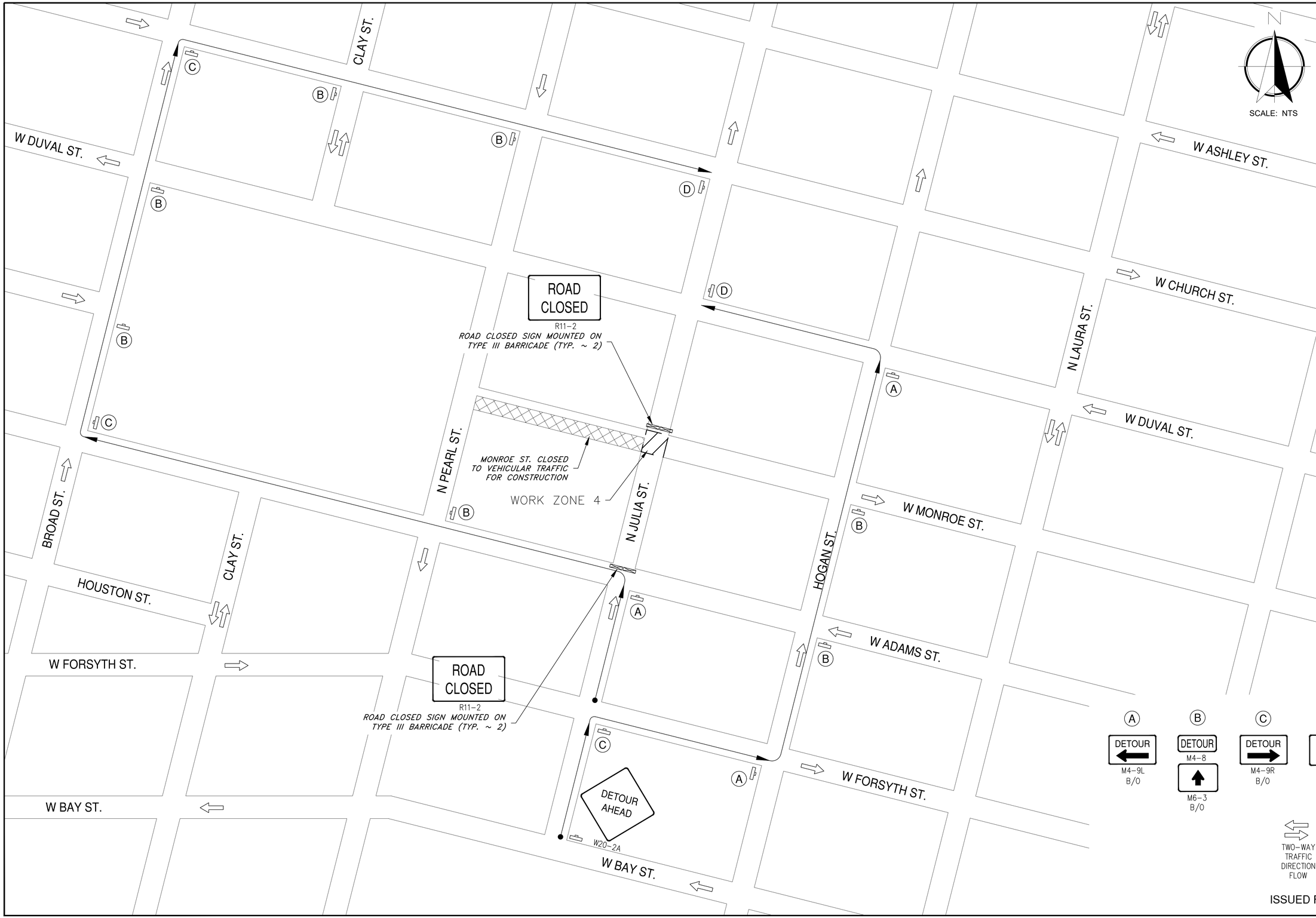

ISSUED FOR BID

Mott MacDonald Florida, LLC
10245 Centurion Parkway North
Suite 320
Jacksonville, Florida 32256
Telephone: (904) 203-1090
Architects AA - C0000035
Engineers EB - 0000155
Surveyors LB - 0000763

MOTT MACDONALD

C&ES
Construction & Engineering Services Consultants, Inc.
9432 Baymeadows Road, Suite 100
Jacksonville, FL 32256
Tel: (904) 652-1186
Business Number CA 27598

NO.	BY	DATE	REVISIONS
6.			
5.			
4.			
3.			
2.			
1.			

DESIGN ENGINEER
CLARO NACU MAGPANTAY, P.E.
FLORIDA REGISTRATION NO.
60164

DESIGNER:	MAGPANTAY
DRAWN BY:	PACE
DATE:	OCT 2020
CHECKED BY:	GRAY
DATE:	OCT 2020

JEA Building Community

DOWNTOWN CHILLED WATER MAINS AND FIBER OPTIC CONDUITS

VEHICULAR TTC PLAN - WORK ZONE 4

PROJ. NO. 502100442
DATE: OCT 2020
SCALE: NONE

NO. SHEETS 36
SHEET NO. 31
DRAWING NO. TTC-7

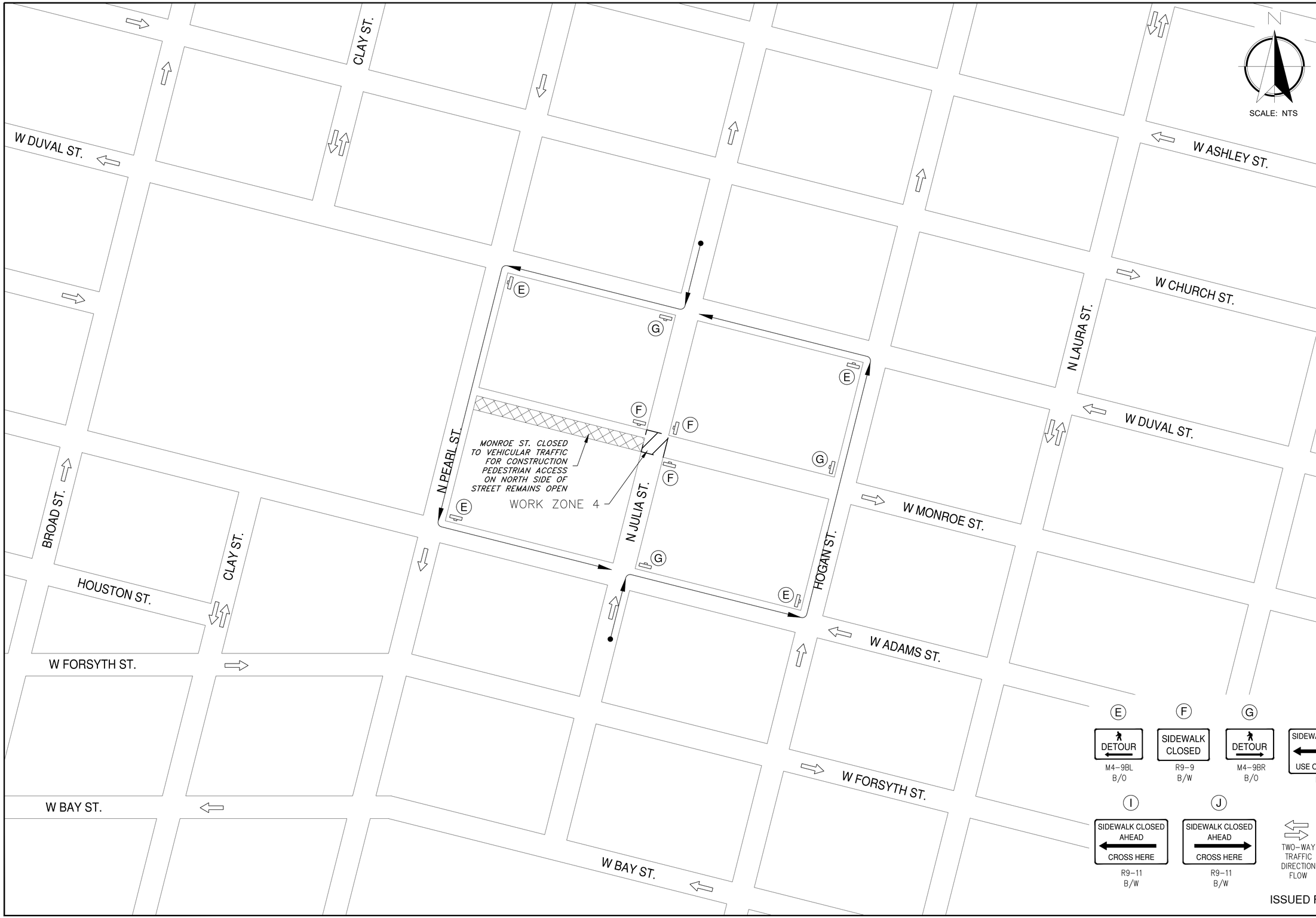

ISSUED FOR BID

Mott MacDonald Florida, LLC
10245 Centurion Parkway North
Suite 320
Jacksonville, Florida 32256
Telephone: (904) 203-1080
Architects AA - C0000035
Engineers EB - 0000155
Surveyors LB - 0000763

MOTT MACDONALD

C&ES
Construction & Engineering Services Consultants, Inc.
9432 Baymeadows Road, Suite 100
Jacksonville, FL 32256
Tel: (904) 652-1186
Business Number CA 27598

NO.	BY	DATE	REVISIONS
6.			
5.			
4.			
3.			
2.			
1.			

DESIGN ENGINEER
CLARO NACU MAGPANTAY, P.E.
FLORIDA REGISTRATION NO.
60164

DESIGNER:	MAGPANTAY
DRAWN BY:	PACE
DATE:	OCT 2020
CHECKED BY:	GRAY
DATE:	OCT 2020

JEA Building Community

DOWNTOWN CHILLED WATER MAINS AND FIBER OPTIC CONDUITS

PEDESTRIAN TTC PLAN - WORK ZONE 4

PROJ. NO. 502100442
DATE: OCT 2020
SCALE: NONE

NO. SHEETS 36
SHEET NO. 32
DRAWING NO. TTC-8

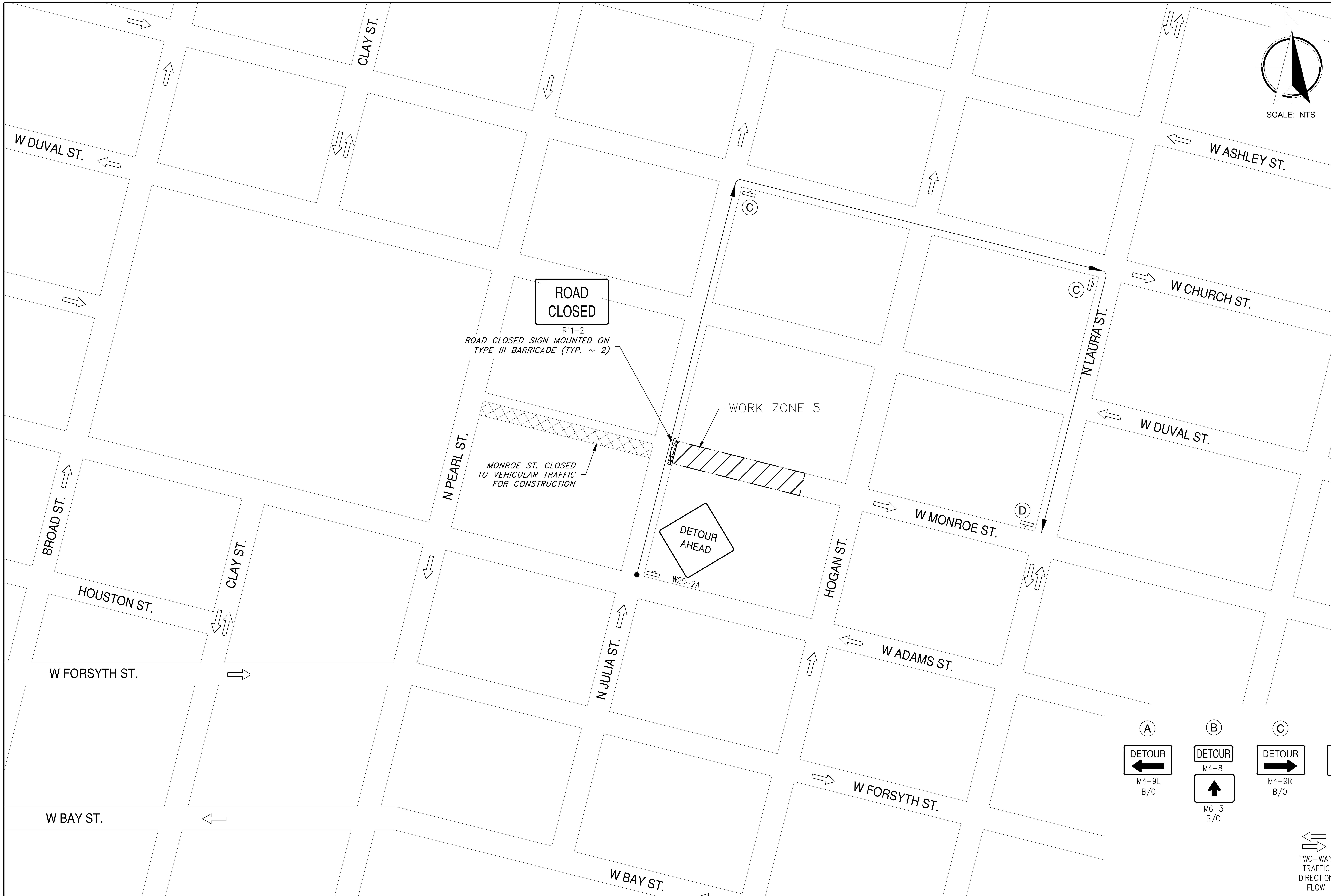

ISSUED FOR BID

Mott MacDonald Florida, LLC
10245 Centurion Parkway North
Suite 320
Jacksonville, Florida 32256
Telephone: (904) 203-1090
Architects AA - C0000035
Engineers EB - 0000155
Surveyors LB - 0006783

MOTT MACDONALD

Construction & Engineering Services Consultants, Inc.
9432 Baymeadows Road, Suite 100
Jacksonville, FL 32256
Tel: (904) 652-1186
Business Number CA 27598

REVISIONS

NO.	BY	DATE
6.		
5.		
4.		
3.		
2.		
1.		

DESIGN ENGINEER
CLARO NACU MAGPANTAY, P.E.
FLORIDA REGISTRATION NO.
60164

DESIGNER:	MAGPANTAY
DRAWN BY:	PACE
DATE:	OCT 2020
CHECKED BY:	GRAY
DATE:	OCT 2020

JEA Building Community

DOWNTOWN CHILLED WATER MAINS AND FIBER OPTIC CONDUITS

VEHICULAR TTC PLAN - WORK ZONE 5

PROJ. NO.	502100442
DATE:	OCT 2020
SCALE:	NONE

NO. SHEETS	36
SHEET NO.	33
DRAWING NO.	TTC-9

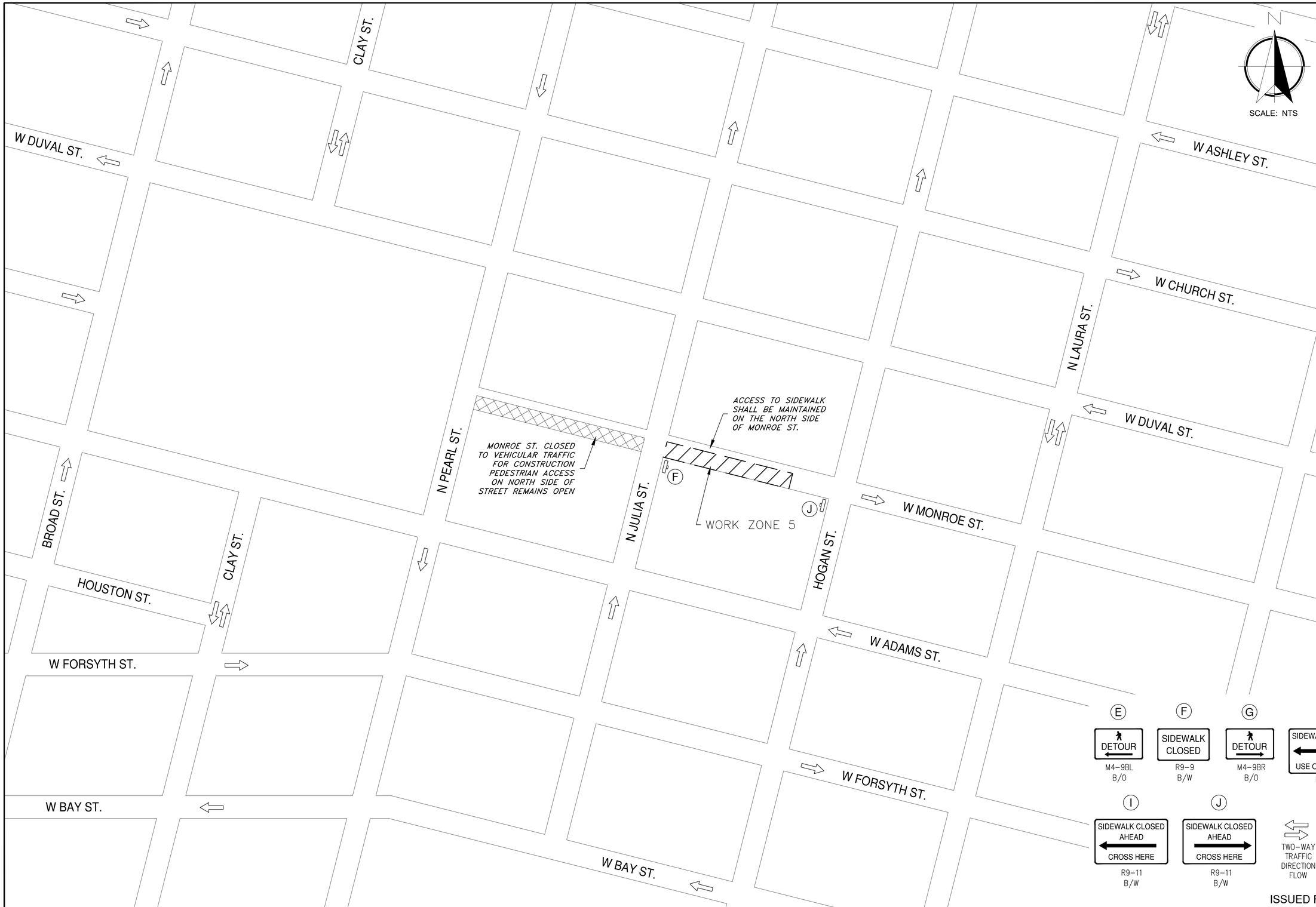

ISSUED FOR BID

Mott MacDonald Florida, LLC
10245 Centurion Parkway North
Suite 320
Jacksonville, Florida 32256
Telephone: (904) 203-1080
Architects AA - C0000035
Engineers EB - 0000155
Surveyors LB - 0000763

MOTT MACDONALD

Construction & Engineering Services Consultants, Inc.
9432 Baymeadows Road, Suite 100
Jacksonville, FL 32256
Tel: (904) 652-1186
Business Number CA 27598

C&ES

NO.	BY	DATE	REVISIONS
6.			
5.			
4.			
3.			
2.			
1.			

DESIGN ENGINEER
CLARO NACU MAGPANTAY, P.E.
FLORIDA REGISTRATION NO.
60164

DESIGNER:	MAGPANTAY
DRAWN BY:	PACE
DATE:	OCT 2020
CHECKED BY:	GRAY
DATE:	OCT 2020

JEA Building Community

DOWNTOWN CHILLED WATER MAINS AND FIBER OPTIC CONDUITS

PEDESTRIAN TTC PLAN - WORK ZONE 5

PROJ. NO. 502100442
DATE: OCT 2020
SCALE: NONE

NO. SHEETS 36
SHEET NO. 34
DRAWING NO. TTC-10

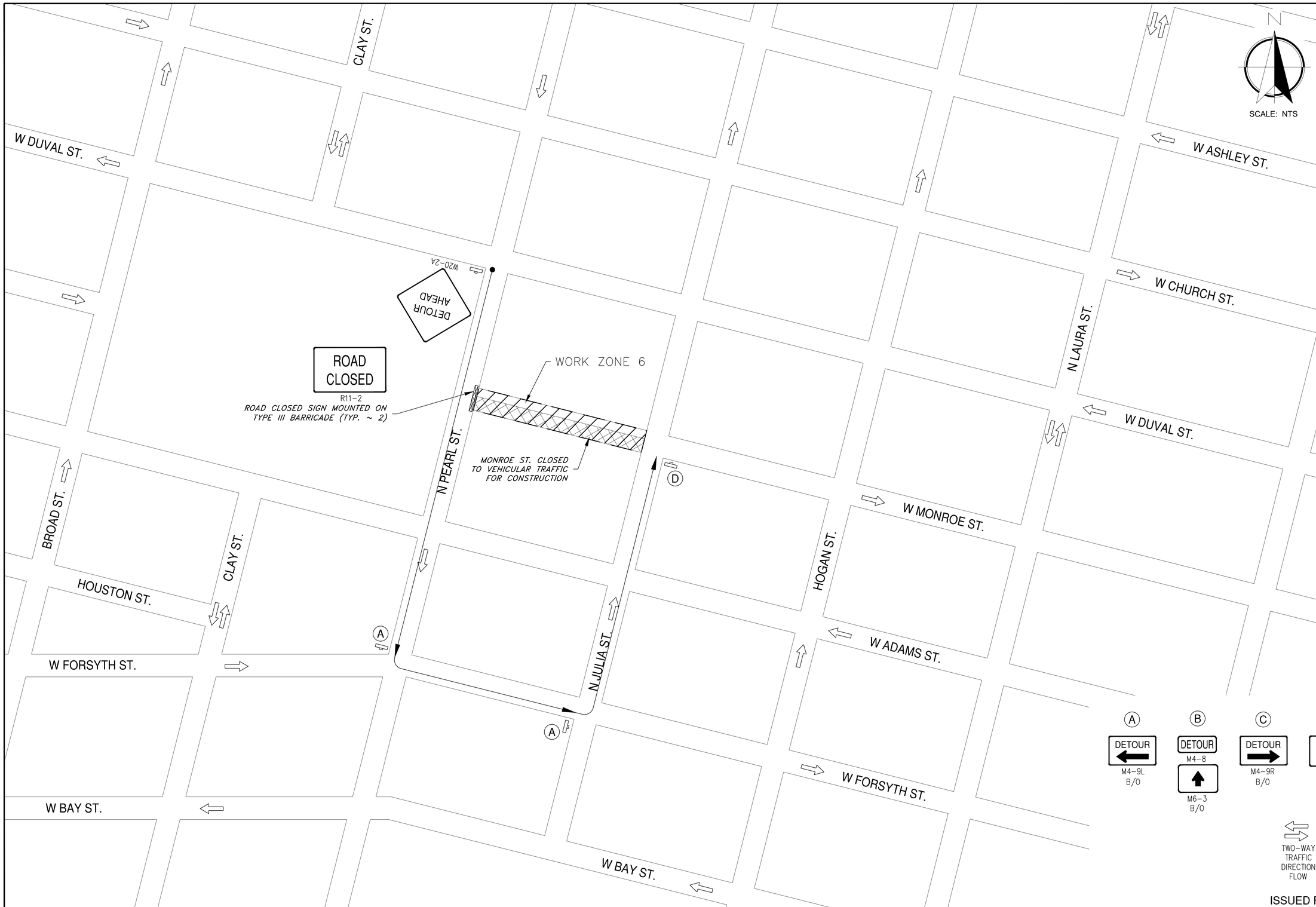

ISSUED FOR BID

Mott MacDonald Florida, LLC
10245 Centurion Parkway North
Suite 320
Jacksonville, Florida 32256
Telephone: (904) 203-1080
Architects AA - C0000035
Engineers EB - 0000155
Surveyors LB - 0000763

MOTT MACDONALD

REVISIONS

NO.	BY	DATE
6.		
5.		
4.		
3.		
2.		
1.		

Construction & Engineering Services Consultants, Inc.
9432 Baymeadows Road, Suite 100
Jacksonville, FL 32256
Tel: (904) 652-1186
Business Number CA 27598

C&ES

DESIGN ENGINEER
CLARO NACU MAGPANTAY, P.E.
FLORIDA REGISTRATION NO.
60164

DESIGNER:	MAGPANTAY
DRAWN BY:	PACE
DATE:	OCT 2020
CHECKED BY:	GRAY
DATE:	OCT 2020

JEA Building Community

DOWNTOWN CHILLED WATER MAINS AND FIBER OPTIC CONDUITS

VEHICULAR TTC PLAN - WORK ZONE 6

PROJ. NO. 502100442
DATE: OCT 2020
SCALE: NONE

NO. SHEETS 36
SHEET NO. 35
DRAWING NO. TTC-11

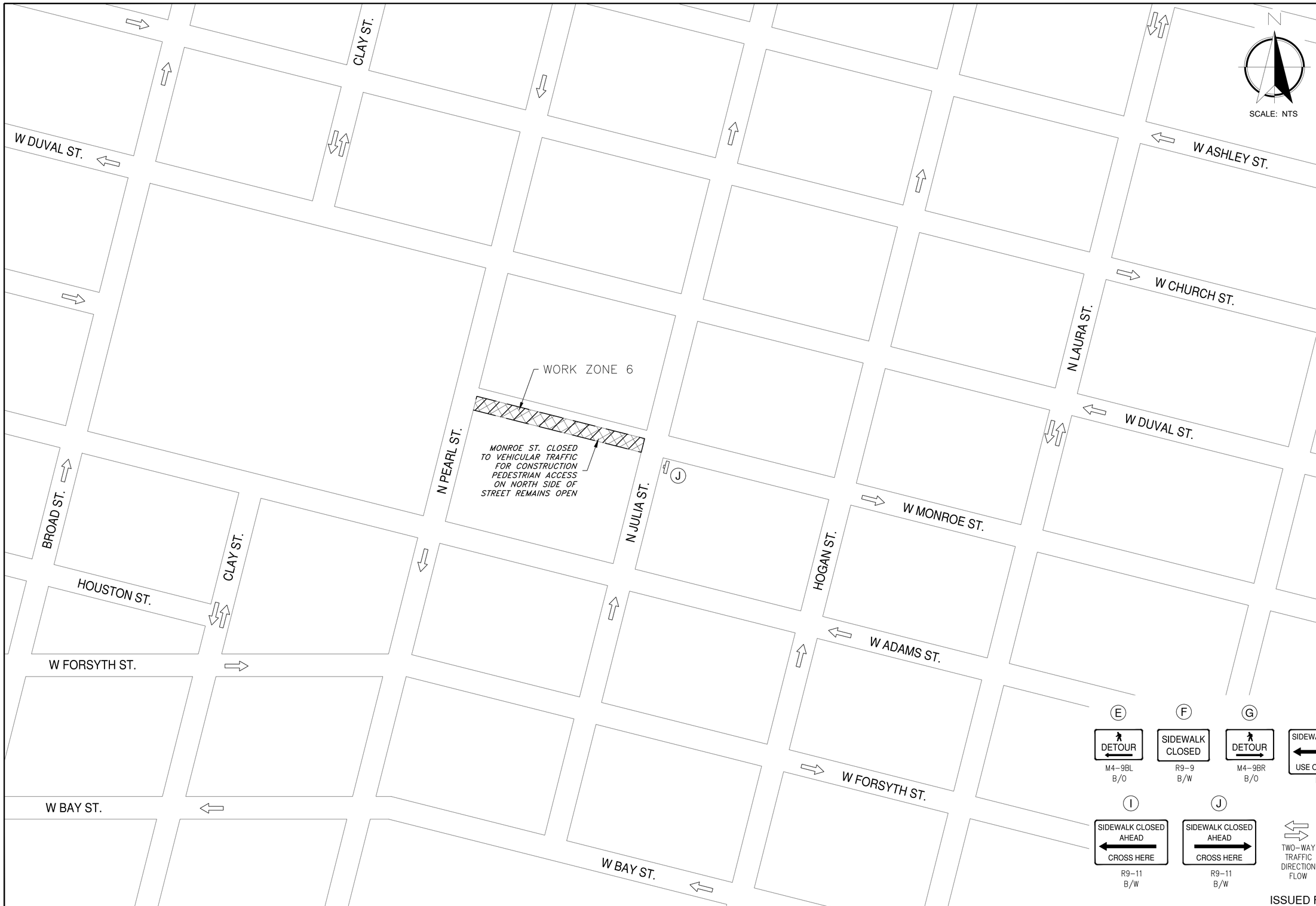

Mott MacDonald Florida, LLC
10245 Centurion Parkway North
Suite 320
Jacksonville, Florida 32256
Telephone: (904) 203-1090
Architects AA - C0000035
Engineers EB - 0000155
Surveyors LB - 0000763

MOTT MACDONALD

REVISIONS

NO.	BY	DATE
6.		
5.		
4.		
3.		
2.		
1.		

C&ES
Construction & Engineering Services Consultants, Inc.
9432 Baymeadows Road, Suite 100
Jacksonville, FL 32256
Tel: (904) 652-1186
Business Number CA 27598

DESIGN ENGINEER
CLARO NACU MAGPANTAY, P.E.
FLORIDA REGISTRATION NO.
60164

DESIGNER:	MAGPANTAY
DRAWN BY:	PACE
DATE:	OCT 2020
CHECKED BY:	GRAY
DATE:	OCT 2020

JEA Building Community

DOWNTOWN CHILLED WATER MAINS AND FIBER OPTIC CONDUITS

PEDESTRIAN TTC PLAN - WORK ZONE 6

PROJ. NO. 502100442
DATE: OCT 2020
SCALE: NONE

NO. SHEETS 36
SHEET NO. 36
DRAWING NO. TTC-12