# CONSTRUCTION DRAWINGS
# FOR

# 6217 WILSON BLVD. and
# 5104 118th STREET
# MASTER PUMP STATION IMPROVEMENTS

## JEA PROJECT NOS.: 180-45 (WILSON BLVD.) and 180-47 (118th STREET)

60% SUBMITTAL - NOT FOR CONSTRUCTION
FEBRUARY 2020




IMAGE OBTAINED FROM GOOGLE EARTH PRO, OCTOBER 2019

**VICINITY MAP**
NOT TO SCALE

## CITY OF JACKSONVILLE NOTES

### GENERAL

All construction shall be performed in accordance with the approved plans and comply with all standard city policies and practices. City approval is contingent upon any required state or federal permit approvals such as those from the Department of Environmental Protection or the St. Johns River Water Management District (SJRWMD).

### UTILITY WORK

Plan approval through Development Services does not include utilities. Proposed water, sewer or electric construction must be approved separately through the respective utility company. In most cases, this will be:

JEA
JEA Tower - 4th Floor
21 W. Church Street
Jacksonville, FL 32202
http://www.jea.com/business/services/devandbuild/developers.asp

### WORK WITHIN THE RIGHT-OF-WAY

CITY: Except for new subdivision infrastructure construction, all work performed within a City of Jacksonville right-of-way or easement requires a Right-of-way Permit. The contractor performing the proposed work must have a current Right-of-way Bond on file with Development Services. Right-of-way Permit applications are processed at:

Development Services Customer Service Counter
Edward Ball Building, 2nd Floor
214 N. Hogan St.
Jacksonville, FL 32202
(904) 255-8572
http://row.jaxdev.info/

STATE: All work performed within a state right-of-way requires a permit from the Florida Department of Transportation (FDOT). It is the developer's responsibility to obtain required FDOT permits or maintenance-of-traffic approvals for work within FDOT right-of-ways. The FDOT regional office can be contacted at (904) 360-5200 Any changes to the approved plans needed for FDOT approval must be submitted to Development Services as revisions.

Adjacent State Roads: FL 23, FL 21
RAILROAD: Railroad companies may require special approvals or permits to work within their right-of-ways. It is the developer's responsibility to obtain permission from any railroad right-of-way owner before performing any work within their right-of-way.

### STORMWATER

Annual reports in compliance with the SJRWMD stormwater permits are required from the maintenance entity of all stormwater management facilities. Send copies of the reports to:

Engineering and Construction Management
Edward Ball Building, 10th Floor
214 N. Hogan St.
Jacksonville, FL 32202
http://www.coj.net/Departments/Public+Works/Engineering+and+Construction+Management/

The owner of any project one (1) acre or larger is required to provide a Notice of Intent (NOI) in accordance with criteria set forth in the city's NPDES permit within 48 hours of beginning construction. Send NOI and NOI fee to:

Florida Department of Environmental Protection
NPDES Stormwater Notices Center, Mail Station #2510
2600 Blair Stone Road
Tallahassee, Florida 32399-2400
(866) 336-6312
http://www.dep.state.fl.us/water/stormwater/npdes/

The contractor shall contact the Environmental Quality Division, Erosion and Sedimentation Control Section (ESC) to provide verification that applicable stormwater permits have been obtained and to schedule a pre-construction ESC site inspection:

Environmental Quality Division
407 North Laura Street, Third Floor
Jacksonville, FL, 32202
(904) 255-7222

### FIRE MARSHALL

Plan review and approval does not relieve the contractor of complying with all applicable State Fire Codes.

Underground mains and hydrants shall be installed, completed, and in service prior to construction work.

Underground contractor shall submit to the Fire Marshall for approval complete specs for all underground pipe and fittings relating to fire protection PRIOR to installation and inspection. Contractor shall include manufacturer's name and pipe ID along with contractor's state license number.

### LANDSCAPE

A Site Work Permit is required for this project.

☐ Tree Fund payment is due: _____ inches at $_____ = $_____

☐ Article 25 funds are due: _____ inches at $_____ = $_____

### TRAFFIC ENGINEERING

#### TRAFFIC SIGNS

| | | | | |
|---|---|---|---|---|
| Metro Name | _____ | $55.00 | ea. | _____ |
| Standard | _____ | $55.00 | ea. | _____ |
| Stop/Yield | _____ | $55.00 | ea. | _____ |
| Design | _____ | $55.00 | | _____ |
| Installation | _____ | $55.00 | /hr. | _____ |
| | | TOTAL | | _____ |

☐ Streetlights Required

NOTE: Traffic sign costs change from time to time. If the costs change after plan approval but prior to payment for installation, the developer must pay the fe for the signs at the current costs. The above total assumes the subdivision will be platted as one phase. If the development is platted as separate phases, design and installation will be calculated separately for each phase.

No lane closures allowed from 7 a.m. till 9 a.m. and from 4 p.m. till 6 p.m.

## PREPARED BY:

CDM Smith
4651 Salisbury Road, Suite 420
Jacksonville, FL 32256
Tel: (904) 731-7109
FL COA No. EB-0000020
PROJECT NO. 6103-234169

JEA sm
Building Community

## PLAN APPROVAL

_____ _____
Date Development Services Division (Chief)

_____ _____
Date Review Group (Reviewer)

Plan approval is valid for five years after the initial approval date. Revisions made after the initial approval date do not extend this five-year time frame.

PLAN APPROVAL IS SUBJECT TO THE FOLLOWING NOTES AND CONDITIONS:

## GENERAL PROJECT INFORMATION

| | |
|---|---|
| **GENERAL** | |
| City Development Number | 4161.241 |
| Concurrency Application Number | |
| Property Appraiser Number (RE #) | |
| Zoning Designation | |
| PUD Ordinance Number | |
| FIRM – Community – Panel | |
| Flood Zones (Show in Plans) | |
| Base Flood Elev. (Show in Plans) | |
| Vertical Datum Used for Project | |
| JEA Availability Number | |
| **SUBDIVISION** | |
| PSD Number | |
| City or Private Inspection | |
| Public or Private Roads | |
| Subdivision ("911") Disk Provided? | |
| **NON-SUBDIVISION** | |
| North American Industry Classification System (NAICS) | |
| Impervious Area (Sq. Ft.) | |

XREFs: [] Images: [IMAGE001]
Last saved by: NUNESAL Time: 2/18/2020 10:37:37 AM
pw:\\cdmsmith-as202-pw.bentley.com:PW_XM116\03234169 JEA PDB\04 Design Services NM_60%\01 General\10 CADD\G000COVR.dwg

# INDEX OF SHEETS

| SHEET NO. | TITLE |
|---|---|
| GENERAL | |
| | COVER |
| G-1 | INDEX OF SHEETS AND GENERAL NOTES |
| G-2 | JEA GENERAL NOTES |
| G-3 | WILSON BLVD. PUMP STATION PROCESS FLOW DIAGRAM |
| G-4 | 118TH STREET PUMP STATION PROCESS FLOW DIAGRAM |
| | |
| CIVIL | |
| C-1 | WILSON BLVD. MASTER PUMP STATION SURVEY 1 OF 2 |
| C-2 | WILSON BLVD. MASTER PUMP STATION SURVEY 2 OF 2 |
| C-3 | WILSON BLVD. MASTER PUMP STATION TEST HOLE, BORING LOCATIONS AND DEMOLITION PLAN |
| C-4 | WILSON BLVD. MASTER PUMP STATION SITE, GRADING AND EROSION CONTROL PLAN |
| C-5 | WILSON BLVD. MASTER PUMP STATION PLAN AND PROFILE |
| C-6 | WILSON BLVD. MASTER PUMP STATION PLAN AND PROFILE |
| C-7 | WILSON BLVD. MASTER PUMP STATION BYPASS PLAN |
| C-8 | 118TH STREET MASTER PUMP STATION SURVEY |
| C-9 | 118TH STREET MASTER PUMP STATION TEST HOLE, BORING LOCATIONS AND DEMOLITION PLAN |
| C-10 | 118TH STREET MASTER PUMP STATION SITE PLAN, YARD PIPING AND EROSION CONTROL PLAN |
| C-11 | 118TH STREET MASTER PUMP STATION BYPASS PLAN |
| CD-1 | CIVIL DETAILS |
| CD-2 | CIVIL DETAILS |
| CD-3 | CIVIL DETAILS |
| CD-4 | JEA STANDARD DETAILS |
| CD-5 | CIVIL DETAILS |
| CD-6 | STORMWATER POLLUTION PREVENTION DETAILS |
| CD-7 | STORMWATER POLLUTION PREVENTION DETAILS |
| CD-8 | STORMWATER POLLUTION PREVENTION DETAILS |
| CD-9 | NOT USED |
| | |
| MOT-1 | NOT USED |
| MOT-2 | NOT USED |
| MOT-3 | NOT USED |
| MOT-4 | NOT USED |
| MOT-5 | NOT USED |
| MOT-6 | NOT USED |
| | |
| ARCHITECTURAL | |
| A-1 | WILSON BLVD. AND 118TH ST. MASTER PS ABBREVIATIONS GENERAL NOTES AND SYMBOLS LEGEND |
| A-2 | WILSON BLVD. MASTER PUMP STATION BUILDING CODE KEY DETERMINATIONS AND LIFE SAFETY PLAN |
| A-3 | WILSON BLVD. MASTER PUMP STATION UPPER LEVEL DEMOLITION FLOOR PLAN |
| A-4 | WILSON BLVD. MASTER PUMP STATION UPPER LEVEL NEW WORK FLOOR PLAN |
| A-5 | WILSON BLVD. MASTER PUMP STATION NEW WORK EXTERIOR ELEVATIONS |
| A-6 | WILSON BLVD. MASTER PUMP STATION ENLARGED TOILET ROOM PLAN AND ELEVATIONS |
| A-7 | WILSON BLVD. MASTER PUMP STATION FINISH AND DOOR SCHEDULES, DOOR AND FRAME TYPES AND PARTITION TYPES |
| A-8 | NOT USED |
| A-9 | 118TH STREET MASTER PUMP STATION BUILDING CODE KEY DETERMINATIONS AND LIFE SAFETY PLAN |
| A-10 | 118TH STREET MASTER PUMP STATION UPPER LEVEL DEMOLITION PLAN |
| A-11 | 118TH STREET MASTER PUMP STATION UPPER LEVEL NEW WORK FLOOR PLAN |
| A-12 | NOT USED |
| A-13 | 118TH STREET MASTER PUMP STATION NEW WORK EXTERIOR ELEVATIONS |
| A-14 | 118TH STREET MASTER PUMP STATION SCHEDULES AND DOOR FRAME TYPES |
| LANDSCAPING | |
| L-1 | NOT USED |
| L-2 | NOT USED |
| TM-1 | NOT USED |
| L-3 | NOT USED |
| L-4 | NOT USED |
| TM-2 | NOT USED |
| | |
| IRRIGATION | |
| IR-1 | NOT USED |
| IR-2 | NOT USED |
| IR-3 | NOT USED |
| IR-4 | NOT USED |
| | |
| STRUCTURAL | |
| S-1 | STRUCTURAL NOTES |
| S-2 | WILSON BLVD. PLAN UPPER LEVEL DEMOLITION PLAN |
| S-3 | WILSON BLVD. LOWER LEVEL MODIFICATION PLAN |
| S-4 | WILSON BLVD. MODIFICATION PLANS AND SECTIONS |
| S-5 | WILSON BLVD. SECTIONS AND DETAILS |
| S-6 | 118TH STREET DEMOLITION PLAN AND DETAILS |
| S-7 | 118TH STREET LOWER LEVEL PLAN AND DETAILS |
| S-8 | 118TH STREET UPPER LEVEL PLANS, SECTIONS AND DETAILS |
| S-9 | 118TH STREET SECTIONS AND DETAILS |
| S-10 | 118TH STREET REPAIR NOTES AND DETAILS |

# INDEX OF SHEETS

| SHEET NO. | TITLE |
|---|---|
| SD-1 | STRUCTURAL DETAILS |
| SD-2 | STRUCTURAL DETAILS |
| SD-3 | STRUCTURAL DETAILS |
| SD-4 | STRUCTURAL DETAILS |
| SD-5 | STRUCTURAL DETAILS |
| | |
| MECHANICAL | |
| M-1 | MECHANICAL LEGEND, SYMBOLS AND ABBREVIATIONS |
| M-2 | WILSON BLVD. MASTER PUMP STATION LOWER LEVEL DEMOLITION PLAN |
| M-3 | WILSON BLVD. MASTER PUMP STATION LOWER LEVEL DEMOLITION SECTIONS |
| M-4 | WILSON BLVD. MASTER PUMP STATION LOWER LEVEL PLAN |
| M-5 | WILSON BLVD. MASTER PUMP STATION SECTION |
| M-6 | 118TH STREET MASTER PUMP STATION LOWER LEVEL DEMOLITION PLAN |
| M-7 | 118TH STREET MASTER PUMP STATION DEMOLITION SECTION |
| M-8 | 118TH STREET MASTER PUMP STATION LOWER LEVEL PLAN |
| M-9 | 118TH STREET MASTER PUMP STATION UPPER LEVEL PLAN |
| M-10 | 118TH STREET MASTER PUMP STATION SECTION |
| M-11 | 118TH STREET MASTER PUMP STATION SECTION AND DETAIL |
| MD-1 | STANDARD DETAILS |
| MD-2 | STANDARD DETAILS |
| MD-3 | STANDARD DETAILS |
| | |
| HVAC | |
| H-1 | HVAC SYMBOLS AND ABBREVIATIONS |
| H-2 | WILSON BLVD. UPPER LEVEL HVAC DEMOLITION PLAN |
| H-3 | WILSON BLVD. LOWER LEVEL HVAC DEMOLITION PLAN |
| H-4 | WILSON BLVD. UPPER HVAC MODIFICAITON PLAN |
| H-5 | WILSON BLVD. LOWER LEVEL HVAC MODIFICATION PLAN |
| H-6 | 118TH ST. UPPER LEVEL HVAC MODIFICATION PLAN |
| H-7 | 118TH ST. LOWER LEVEL HVAC MODIFICATION PLAN |
| HD-1 | WILSON BLVD. HVAC SCHEDULES |
| HD-2 | 118TH ST. HVAC SCHEDULES |
| HD-3 | HVAC DETAILS I |
| HD-4 | HVAC DETAILS II |
| HD-5 | HVAC DETAILS III |
| | |
| PLUMBING | |
| P-1 | PLUMBING SYMBOLS AND ABBREVIATIONS |
| P-2 | WILSON BLVD. UPPER LEVEL PLUMBING DEMOLITION PLAN |
| P-3 | WILSON BLVD. UPPER LEVEL PLUMBING MODIFICATION PLAN |
| P-4 | WILSON BLVD. RISER DIAGRAMS |
| P-5 | 118TH STREET UPPER LEVEL PLUMBING MODIFICATIONS |
| PD-1 | PLUMBING DETAILS |
| PD-2 | FUEL SYSTEM DETAILS |
| ELECTRICAL | |
| E-1 | ELECTRICAL LEGEND I |
| E-2 | ELECTRICAL LEGEND II |
| E-3 | GENERAL ELECTRICAL NOTES |
| E-4 | WILSON BLVD. MASTER PUMP STATION ELECTRICAL SITE PLAN |
| E-5 | WILSON BLVD. MASTER PUMP STATION ONE LINE POWER DIAGRAM DEMOLITION |
| E-6 | WILSON BLVD. MASTER PUMP STATION ONE LINE POWER DIAGRAM |
| E-7 | WILSON BLVD. MASTER PUMP STATION EQUIPMENT FRONT VIEWS |
| E-8 | WILSON BLVD. MASTER PUMP STATION LOWER LEVEL AT EL. 5.75' ELECTRICAL DEMOLITION PLAN |
| E-9 | WILSON BLVD. MASTER PUMP STATION UPPER LEVEL AT EL. 12.00' ELECTRICAL DEMOLITION PLAN |
| E-10 | WILSON BLVD. MASTER PUMP STATION LOWER LEVEL AT EL. 5.75' POWER PLAN |
| E-11 | WILSON BLVD. MASTER PUMP STATION UPPER LEVEL AT EL. 12.00' POWER PLAN |
| E-12 | WILSON BLVD. MASTER PUMP STATION LOWER LEVEL AT EL. 5.75' LIGHTING PLAN |
| E-13 | WILSON BLVD. MASTER PUMP STATION UPPER LEVEL AT EL. 12.00' LIGHTING PLAN |
| E-14 | WILSON BLVD. MASTER PUMP STATION LOWER LEVEL AT EL. 5.75' SECURITY SYSTEM PLAN |
| E-15 | WILSON BLVD. MASTER PUMP STATION UPPER LEVEL AT EL. 12.00' SECURITY SYSTEM PLAN |
| E-16 | 118TH ST. MASTER PUMP STATION ELECTRICAL SITE PLAN |
| E-17 | 118TH ST. MASTER PUMP STATION ONE LINE POWER DIAGRAM DEMOLITION |
| E-18 | 118TH ST. MASTER PUMP STATION MCC-1A ONE LINE POWER DIAGRAM |
| E-19 | 118TH ST. MASTER PUMP STATION MCC-1B ONE LINE POWER DIAGRAM |
| E-20 | 118TH ST. MASTER PUMP STATION ELECTRICAL EQUIPMENT FRONT ELEVATIONS |
| E-21 | 118TH ST. MASTER PUMP STATION LOWER LEVEL AT EL. -3.50' & -11.69' ELECTRICAL DEMOLITION PLAN |
| E-22 | 118TH ST. MASTER PUMP STATION UPPER LEVEL AT EL. 8.00' ELECTRICAL DEMOLITION PLAN |
| E-23 | 118TH ST. MASTER PUMP STATION LOWER LEVEL AT EL. -3.50' & -11.69' POWER PLAN |
| E-24 | 118TH ST. MASTER PUMP STATION UPPER LEVEL AT EL. 8.00' POWER PLAN |
| E-25 | 118TH ST. MASTER PUMP STATION LOWER LEVEL AT EL. -3.50' & -11.69' LIGHTING PLAN |
| E-26 | 118TH ST. MASTER PUMP STATION UPPER LEVEL AT EL. 8.00' LIGHTING PLAN |
| E-27 | 118TH ST. MASTER PUMP STATION ELECTRICAL ROOM CABLE TRAY SECTION AND LAYOUT PLAN |
| E-28 | 118TH ST. MASTER PUMP STATION LOWER LEVEL SECURITY SYSTEMS PLAN |
| E-29 | 118TH ST. MASTER PUMP STATION UPPER LEVEL SECURITY SYSTEMS PLAN |
| E-30 | ELEMENTARY CONTROL DIAGRAMS |
| E-31 | WILSON BLVD. MASTER PUMP STATION RISER DIAGRAMS |

# INDEX OF SHEETS

| SHEET NO. | TITLE |
|---|---|
| E-32 | 118TH STREET MASTER PUMP STATION RISER DIAGRAMS |
| E-33 | WILSON BLVD. MASTER PUMP STATION PANELBOARD SCHEDULES |
| E-34 | 118TH STREET MASTER PUMP STATION PANELBOARD SCHEDULES |
| E-35 | LIGHTING FIXTURE SCHEDULE |
| ED-1 | ELECTRICAL DETAILS I |
| ED-2 | ELECTRICAL DETAILS II |
| ED-3 | SECURITY DETAILS |
| | |
| INSTRUMENTATION | |
| I-1 | INSTRUMENTATION LEGEND (SHEET 1 OF 2) |
| I-2 | INSTRUMENTATION LEGEND (SHEET 2 OF 2) |
| I-3 | CONTROL BLOCK DIAGRAM WILSON BLVD. |
| I-4 | PROCESS AND INSTRUMENTATION DIAGRAM WILSON BLVD. PUMP STATION |
| I-5 | PROCESS AND INSTRUMENTATION DIAGRAM WILSON BLVD. ELECTRICAL EQUIPMENT |
| I-6 | CONTROL BLOCK DIAGRAM 118TH STREET |
| I-7 | PROCESS AND INSTRUMENTATION DIAGRAM 118TH STREET PUMP STATION |
| I-8 | PROCESS AND INSTRUMENTATION DIAGRAM 118TH STREET ODOR CONTROL SYSTEM |
| I-9 | PROCESS AND INSTRUMENTATION DIAGRAM 118TH STREET ELECTRICAL EQUIPMENT |
| I-10 | INSTRUMENT INSTALLATION DETAILS |
| I-11 | INSTRUMENT INSTALLATION DETAILS (SHEET 2 OF 2) |

## GENERAL NOTES:

1. ELEVATIONS SHOWN HEREON ARE RELATIVE TO THE NAVD OF 1988 AND ARE BASED ON BENCHMARKS AS SHOWN ON THE SURVEYS.
2. TOPOGRAPHIC SURVEYS WERE PERFORMED 9-2019 BY:
   R.E. HOLLAND & ASSOCIATES INC
   4770 BAYMEADOWS RD., SUITE 105
   JACKSONVILLE, FLORIDA 32286
3. LOCATIONS, ELEVATIONS, AND DIMENSIONS OF EXISTING UTILITIES, STRUCTURES, AND OTHER FEATURES ARE SHOWN ACCORDING TO THE BEST INFORMATION AVAILABLE AT THE TIME OF PREPARATION OF THESE PLANS, BUT DO NOT PURPORT TO BE ABSOLUTELY CORRECT. PRIOR TO CONSTRUCTION, THE CONTRACTOR SHALL VERIFY ACTUAL LOCATIONS OF SUCH FEATURES AND BE FULLY RESPONSIBLE FOR ALL DAMAGES WHICH MIGHT BE OCCASIONED BY CONTRACTOR'S FAILURE TO VERIFY ACTUAL LOCATIONS OF FEATURES AFFECTING THE WORK.
4. PRIOR TO BEGINNING CONSTRUCTION, THE CONTRACTOR SHALL PHYSICALLY VERIFY LOCATION OF ALL UTILITIES, ABOVE AND BELOW GROUND AND NOTIFY JEA 72 HOURS PRIOR TO DIGGING IN ANY PORTION OF THE SITE. ADDITIONAL NOTIFICATION LIMITATIONS SPECIFIED IN THE TECHNICAL SPECIFICATION.
5. THE CONTRACTOR SHALL CONTACT THE DESIGN-BUILDER IMMEDIATELY UPON FINDING ANY CONFLICTS DURING CONSTRUCTION ON ANY IMPROVEMENTS SHOWN ON THE DRAWINGS.
6. THE CONTRACTOR SHALL NOTE ALL EXISTING UTILITIES ENCOUNTERED DURING EXCAVATION AND INCLUDE AS-BUILT INFORMATION ON RECORD DRAWINGS.
7. FOR UTILITY SEPARATION REQUIREMENTS, PLEASE REFER TO JEA'S WATER AND SEWER STANDARDS MANUAL.
8. ABSOLUTELY NO WORK WILL BE ALLOWED WITHIN ANY CONSERVATION AREA, BUFFER AREA, MITIGATION AREA, OR DESIGNATED WETLAND AREA UNLESS SO SPECIFICALLY DESCRIBED BY THE PLANS.
9. MEASURES SHALL BE TAKEN BY THE CONTRACTOR TO ENSURE THAT ADEQUATE EROSION AND SEDIMENTATION CONTROL ARE MAINTAINED AT ALL TIMES DURING THE CONSTRUCTION.
10. ALL BRUSH, STRIPPING OR UNSUITABLE MATERIAL SHALL BE LAWFULLY DISPOSED OF OFF-SITE AT THE CONTRACTOR'S EXPENSE. HOWEVER, NONE OF THE WASTE MATERIAL SHALL BE REMOVED FROM THE SITE WITHOUT PERMISSION OF JEA.
11. NO REPRESENTATION IS MADE REGARDING BALANCED EARTHWORK. ANY EXCESS MATERIAL, OR MATERIAL NOT SUITABLE FOR USE AS BACKFILL, SHALL BE HAULED AWAY TO AN APPROVED DISPOSAL FACILITY AT THE CONTRACTOR'S EXPENSE, AND WHERE NECESSARY, SUITABLE FILL AND BACKFILL SHALL BE PROVIDED AND NO ADDITIONAL COMPENSATION SHALL BE ALLOWED.
12. THE APPROXIMATE EXISTING BORING LOCATIONS ARE SHOWN ON THE CIVIL DRAWINGS FOR THE CONTRACTOR'S CONVENIENCE. THE PLAN VIEW LOCATION IS APPROXIMATE AND THE BORINGS MAY BE UP TO 10 FEET AWAY, HORIZONTALLY.
13. THE CONTRACTOR SHALL REFER TO GEOTECHNICAL EVALUATION PREPARED BY MESKEL & ASSOCIATES ENGINEERING, PLLC, GEOTECHNICAL EXPLORATION REPORT FOR WILSON BLVD. PUMP STATION REPLACEMENT DATED MAY 6, 2016, AND REPORT OF ADDITIONAL GEOTECH EXPLORATION DATED SEPTEMBER 16, 2016. THE CONTRACTOR IS RESPONSIBLE FOR ANY CONCLUSIONS TO BE BE DRAWN FROM BORING(S) INCLUDING THE CHARACTER OF THE MATERIALS TO BE ENCOUNTERED. BORING LOCATIONS AND NUMBERS ARE SHOWN ON THE CIVIL SHEETS.
14. THE CONTRACTOR SHALL BE RESPONSIBLE FOR PERFORMING SUBSURFACE UNDERGROUND ENGINEERING (SUE) AND LOCATING UNDERGROUND UTILITIES. CONTRACTOR SHALL NOTIFY ENGINEER OF CONFLICTS THAT ARE NOT ACCURATELY REPRESENTED IN THESE DOCUMENTS. THE CONTRACTOR IS RESPONSIBLE FOR VERIFYING EXISTING CONDITIONS IN ACCORDANCE WITHE THESE DRAWINGS AND UTILITY OWNER MARKINGS. CONTRACTOR ACKNOWLEDGES AND AGREES THAT THE CONTRACTOR IS CONTRACTED AND COMPENSATED FOR PERFORMING INVESTIGATIONS OF EXISTING SITE CONDITIONS RELATED TO THE DESIGN AND UTILITY OWNER MARKINGS, SUFFICIENT TO SUPPORT THE INSTALLATION OF THE DESIGN AND THAT THE INFORMATION PROVIDED IN THE DESIGN DOCUMENTS ARE ONLY TO ASSIST THE CONTRACTOR IN COMPLETING SITE INVESTIGATIONS.
15. THESE PLANS MAY HAVE BEEN CHANGED IN SCALE/SIZE BY REPRODUCTION. THIS REDUCTION SHALL BE CONSIDERED WHEN OBTAINING SCALED DATA.

DATE:
JONATHAN Z GOLDMAN
PE NO. PE 0048925

| REV. NO. | DATE | DRWN | CHKD | REMARKS |
|---|---|---|---|---|

DESIGNED BY: X
DRAWN BY: A. NUNES
SHEET CHK'D BY: X
CROSS CHK'D BY: X
APPROVED BY: X
DATE: FEBRUARY 2020

CDM Smith
4651 Salisbury Road, Suite 420
Jacksonville, FL 32256
Tel: (904) 731-7109
FL COA No. EB-0000020

JEA

WILSON BLVD. (180-45) AND 118th ST. (180-47)
MASTER PUMP STATION IMPROVEMENTS

INDEX OF SHEETS
AND GENERAL NOTES

PROJECT NO. 6103-234169
FILE NAME: G001LEGN.DWG
SHEET NO.
G-1

60% SUBMITTAL - NOT FOR CONSTRUCTION

XREFs: [CDMS_2436] Images: []
Last saved by: CARTERRH Time: 2/24/2020 10:24:20 AM
pw:\\cdmsmith-az02-pw.bentley.com:PW_XM1\6103\234169 JEA PDB\04 Design Services NM_60%\01 General\10 CADD\G001LEGN.dwg
©2020 CDM SMITH ALL RIGHTS RESERVED.
REUSE OF DOCUMENTS: THESE DOCUMENTS AND DESIGNS PROVIDED BY PROFESSIONAL SERVICE, INCORPORATED HEREIN, ARE THE PROPERTY OF CDM SMITH AND ARE NOT TO BE USED, IN WHOLE OR PART, FOR ANY OTHER PROJECT WITHOUT THE WRITTEN AUTHORIZATION OF CDM SMITH.

XREFs: [CDMS_2234] Images: []
Last saved by: NUNESAL Time: 12/12/2019 2:12:05 PM
pw:\\pw.cdmsmith.com:PW_XM1\6103\234169 JEA PDB\04 Design Services NM_60%\01 General\10 CADD\G002GNSI.dwg
©2020 CDM SMITH ALL RIGHTS RESERVED
REUSE OF DOCUMENTS: THESE DOCUMENTS AND DESIGNS PROVIDED BY PROFESSIONAL SERVICE, INCORPORATED HEREIN, ARE THE PROPERTY OF CDM SMITH AND ARE NOT TO BE USED, IN WHOLE OR PART, FOR ANY OTHER PROJECT WITHOUT THE WRITTEN AUTHORIZATION OF CDM SMITH.

# SURVEY AND LOCATE DATA:

| NOT APPLICABLE | APPLICABLE | |
|---|---|---|
| ☒ | ☐ | 1. ALL ELEVATIONS ARE BASED ON U.S.C.&G.S. DATUM AND SHOWN IN FEET. |
| ☐ | ☒ | 2. ELEVATIONS ARE BASED ON N.A.V.D. 1988. |
| ☐ | ☒ | 3. LOCATION OF EXISTING UTILITIES OBTAINED BY SOFT DIG LOCATES WHERE SHOWN ON PLANS, OR INCLUDED WITH BID SPECS. |
| ☐ | ☒ | |
| ☒ | ☐ | 4. EXISTING WATER AND SEWER LINES ARE SHOWN AS PER FIELD LOCATES AND SUBDIVISION AS-BUILT PLANS. |
| ☐ | ☒ | 5. UNDERGROUND UTILITIES WERE LOCATED UTILIZING GROUND PENETRATING RADAR (GPR) AND A DIGITAL LOCATOR. CONTRACTOR SHALL BE AWARE THAT IN SOME CASES UTILITIES HAVE BEEN LOCATED, AND SURVEY HAS BEEN COMPLETED ONLY ON ONE SIDE OF THE ROAD. |
| ☐ | ☒ | 6. ALL PIPE LENGTHS SHOWN ON PLAN AND PROFILES ARE FROM CENTER TO CENTER OF MANHOLES, CATCH BASINS, INLETS ETC. OR ALONG THE CENTER LINE OF FORCE MAINS AND WATER MAINS. |
| ☐ | ☒ | |
| ☐ | ☒ | 7. INVERT ELEVATIONS SHOWN ON DRAWINGS REFER TO THE CENTERLINE OF MANHOLES, UNLESS OTHERWISE INDICATED. |
| ☐ | ☒ | 8. THE LOCATION OF ALL EXISTING SEWER AND WATER SERVICE LINES MAY NOT BE INDICATED ON THESE PLANS. THE LOCATION OF NEW SERVICES SHALL BE VERIFIED IN THE FIELD. |
| ☐ | ☒ | |
| | | 9. BENCHMARK DATA: |

REFERENCE BENCH MARK 1: INFORMATION SUPPLIED BY ST. JOHNS RIVER MANAGEMENT DISTRICT. FROM THE INTERSECTION OF BLANDING BLVD. & ARGYLE FOREST BLVD. IN JACKSONVILLE, GO WESTERLY ALONG ARGYLE FOREST BLVD. FOR 2.5 MILES TO WESTPORT ROAD AND THE MARK ON THE RIGHT. THE MARK IS 193' NORTHWEST OF CENTERLINE OF ARGYLE FOREST BLVD., 57.0' SOUTHWEST OF WESTPORT ROAD, 49.0' SOUTHEASTERLY OF SOUTHWEST CORNER OF CURB INLET, 55.6' EASTERLY OF SOUTHEAST CORNER OF A CONCRETE BLOCK PUMPHOUSE. THE MARK IS A P.K. NAIL AND S.J.R.W.M.D. DISK STAMPED "98-008-0-01" SET IN A DRILL HOLE AT SOUTHEASTERLY END OF A 32'X1.0' CONCRETE HEADWALL ON WESTERLY SIDE OF LAKE. ELEVATION= 31.792 (NAVD 1988) NORTHING: 2131802.36, EASTING: 409672.74 (NAD 83)

REFERENCE BENCH MARK 2: INFORMATION SUPPLIED BY ST. JOHNS RIVER MANAGEMENT DISTRICT. FROM THE INTERSECTION OF BLANDING BLVD. & ARGYLE FOREST BLVD. IN JACKSONVILLE, GO WESTERLY ALONG ARGYLE FOREST BLVD. FOR 2.5 MILES TO WESTPORT ROAD, GO NORTHERLY ALONG WESTPORT ROAD FOR .35 MILES AND THE MARK ON THE RIGHT. THE MARK IS 26.4' EAST OF CENTERLINE OF WESTPORT ROAD, 51.3' SOUTHEASTERLY OF A FIRE HYDRANT, 63.5' NORTHEASTERLY OF THE NORTHEAST FENCE CORNER OF HOUSE #8138. THE MARK IS A 4"X4" PRECAST CONCRETE MONUMENT WITH S.J.R.W.M.D. DISK STAMPED "98-009-0-01" SET LEVEL WITH THE GROUND. ELEVATION= 43.358 (NAVD 1988) NORTHING: 2133309.32, EASTING: 409439.97 (NAD 83)
20)LAST DATE IN FIELD: 4/25/2016

# PERMIT REQUIREMENTS (NOT ALL INCLUSIVE):

| | | |
|---|---|---|
| ☐ | ☒ | 1. CONTRACTOR TO OBTAIN ALL REQUIRED RIGHT-OF-WAY PERMITS. |
| ☐ | ☒ | 2. CONTRACTOR SHALL NOT OPEN CUT STREETS IN THE PROJECT AREA UNLESS SPECIFICALLY SHOWN ON PLANS |
| ☐ | ☒ | 3. THE CONTRACTOR IS RESPONSIBLE FOR OBTAINING A CONSUMPTIVE USE PERMIT (C.U.P.) THROUGH THE ST. JOHNS WATER MANAGEMENT DISTRICT SHOULD DEWATERING ACTIVITIES BE REQUIRED. |
| ☐ | ☒ | 4. THE DEPARTMENT OF TRANSPORTATION, RAILROAD COMPANIES AND C.O.J. ARE TO BE NOTIFIED IN ADVANCE OF CONSTRUCTION PER THEIR RESPECTIVE PERMIT CONDITIONS. |
| ☐ | ☒ | 5. ALL WORK SHALL BE IN ACCORDANCE WITH BID DOCUMENTS, JEA WATER AND SEWER STANDARDS, DETAILS AND MATERIALS MANUAL, REV. 01/19 OR LATEST EDITION AND CITY OF JACKSONVILLE STANDARD SPECIFICATIONS AND DETAILS AND ALL APPLICABLE STATE AND LOCAL REGULATIONS. |
| ☐ | ☒ | 6. IF SOLVENT CONTAMINATION IS FOUND IN THE PIPE TRENCH, WORK SHALL BE STOPPED AND THE PROPER AUTHORITIES NOTIFIED. WITH APPROVAL OF THE PERMITTING AGENCY, DUCTILE IRON PIPE, FITTINGS AND SOLVENT RESISTANT GASKET MATERIAL SHALL BE USED IN THE CONTAMINATED AREA. THE DUCTILE IRON PIPE SHALL EXTEND AT LEAST 100 FEET BEYOND ANY SOLVENT NOTED. |
| ☐ | ☒ | 7. THE CONTRACTOR SHALL NOTIFY APPLICABLE UTILITY CONTACT PERSONNEL NOT LESS THAN ONE WEEK PRIOR TO CONSTRUCTION OF FACILITIES IN THEIR RESPECTIVE AREAS. |
| ☐ | ☒ | 8. TREE PROTECTION SHALL BE IN ACCORDANCE WITH JACKSONVILLE ORDINANCE CODE 656 AND/OR AS DETAILED ON SPECIFIC PLAN SHEETS. NO TRIMMING OF OVERHANGING TREE LIMBS WILL BE ALLOWED. USE SMALLER EQUIPMENT IF NECESSARY. |
| ☐ | ☒ | 9. THE CONTRACTOR SHALL LOCATE THE DRAINAGE INLET STRUCTURES IN THE PROJECT AREA AND ERECT SEDIMENTATION CONTROL DEVICES AS NECESSARY PER THE CITY OF JACKSONVILLE STORMWATER POLLUTION PREVENTION PLAN. |
| ☐ | ☒ | 10. CONTRACTOR TO COORDINATE WORK WITH OTHER UTILITIES DURING CONSTRUCTION. |

# ABBREVIATIONS:

| | | | |
|---|---|---|---|
| AC | ASBESTOS CEMENT | INT. | INTERSECTION |
| A.G. | ALLEY GRATE | INV. | INVERT |
| ℄ | BASE LINE | I.P. | IRON PIPE |
| B.M. | BENCH MARK | J.W.W. | JACKSONVILLE WATER WORKS |
| BC | BOTTOM OF CURVE | LT. | LEFT |
| C.B. | CATCH BASIN | MB | MAIL BOX |
| C.I. | CAST IRON | M.H. | MANHOLE |
| ℄ | CENTER LINE | N.C. | NORMALLY CLOSED |
| C.E.P. | CITY ELECTRIC POLE | N.T.S. | NOT TO SCALE |
| CONC. | CONCRETE | O.E. | OVERHEAD ELECTRIC |
| CONST. | CONSTRUCTION | O.T. | OVERHEAD TELEPHONE |
| C.M.P. | CORRUGATED METAL PIPE | P.R.M. | PERMANENT REFERENCE MONUMENT |
| C.M.P.A. | CORRUGATED METAL PIPE ARCH | PVC | POLYVINYL CHLORIDE |
| CULV. | CULVERT | r | RADIUS |
| C&G | CURB & GUTTER | R | RATE |
| C | CUT | R.C.P. | REINFORCED CONCRETE PIPE |
| D.B.I. | DITCH BOTTOM INVERT | RT | RIGHT |
| D.W. OR DR | DRIVEWAY | R/W | RIGHT OF WAY |
| DI | DUCTILE IRON | R.D. | ROOF DRAIN |
| E.O.P. | EDGE OF PAVEMENT | S/W | SIDE WALK |
| ELEV. | ELEVATION | S.B.T. | SOUTHERN BELL TELEPHONE |
| ERCP | ELLIPTICAL REINFORCED CONC. PIPE | SST | STAINLESS STEEL |
| EXP. JT. | EXPANSION JOINT | STA | STATION |
| F | FILL | TC | TOP OF CURVE |
| F.H. | FIRE HYDRANT | TOB | TOP OF BANK |
| ℄ | FLOW LINE | U.G.E. | UNDERGROUND ELECTRIC |
| FM | FORCE MAIN | U.G.T. | UNDERGROUND TELEPHONE |
| GALV./GLV | GALVANIZED | U.S.C. & G.S. | UNITED STATES COASTAL & GEODETIC SURVEY |
| G | GAS LINE | V.C. | VITRIFIED CLAY |
| G.V. | GATE VALVE | WM | WATER METER |
| HDPE | HIGH DENSITY POLYETHYLENE PIPE | W.V. | WATER VALVE |
| H.W. | HEAD WALL | WLP | WOOD LIGHT POLE |
| H.C. | HIGH CURB | WPP | WOOD POWER POLE |
| | | WTP | WOOD TELEPHONE POLE |

# RESTORATION NOTES:

1. THE CONTRACTOR SHALL EMPLOY A LAND SURVEYOR, REGISTERED IN THE STATE OF FLORIDA, TO REFERENCE AND RESTORE PROPERTY CORNERS AND LANDMARKS WHICH MAY BE DISTURBED BY CONSTRUCTION, KNOWN CORNER LOCATIONS ARE AVAILABLE FROM THE CITY OF JACKSONVILLE ENGINEERING DIVISION.
2. THE CONTRACTOR SHALL RESTORE/REPLACE ALL CULVERTS, HEADWALLS AND STORM DRAIN INLETS REMOVED OR DISTURBED BY THE CONSTRUCTION OPERATION.
3. TRAFFIC SIGNS AND PAVEMENT MARKINGS SHALL BE RESTORED TO THEIR PRE-CONSTRUCTION CONDITION IN ACCORDANCE WITH CITY OF JACKSONVILLE/FDOT STANDARD SPECIFICATIONS.
4. SIDEWALKS, DRIVEWAYS AND CURBING DAMAGED OR REMOVED DURING CONSTRUCTION SHALL BE REPLACED IN ACCORDANCE WITH JACKSONVILLE STANDARD SPECIFICATIONS. SIDEWALKS REMOVED AND REPLACED IN CURB AND GUTTER AREAS AT INTERSECTIONS SHALL HAVE HANDICAP RAMPS INSTALLED. DRIVEWAYS AND SIDEWALKS SHALL BE SAWCUT ALONG THE RIGHT-OF-WAY LINE OR NEAREST JOINT AND REMOVED AND REPLACED TO THE EDGE OF STREET.
5. GRASS SEED SHALL BE FURNISHED AND PLACED IN THE AREAS DISTURBED OR DAMAGED BY THE CONSTRUCTION OPERATION.
6. ALL PAVEMENT REPAIR SHALL BE IN ACCORDANCE WITH THE CITY OF JACKSONVILLE/FDOT STANDARD DETAILS AND SPECIFICATIONS LATEST EDITION.
7. UNLESS OTHERWISE NOTED, REMOVE AND REPLACE EXISTING PAVEMENT AS PER C.O.J. CASE X (10) PAVEMENT REPLACEMENT DETAIL.
8. CONTRACTOR MUST MAINTAIN AND PRESERVE NEWLY GRADED AREAS AND REPAIR AREAS WHERE SETTLING AND EROSION HAVE OCCURRED.

# UTILITY CONTACTS:

| | |
|---|---|
| A. AT&T ~ GENERAL NUMBER | 904-519-2529 |
| B. AT&T ~ ADAM DUGAN ~ NORTH DISTRICT | 904-781-0741 |
| C. AT&T ~ BILL LAKE ~ SOUTH DISTRICT | 904-303-8754 |
| D. CITY OF JACKSONVILLE ~ PUBLIC WORKS DEPT. | 904-255-8762 |
| E. CITY OF JACKSONVILLE ~ TRAFFIC OPERATIONS | 904-387-8861 |
| F. FLORIDA DEPT. OF TRANSPORTATION | 904-360-5200 |
| G. JEA ~ WATER COLLECTION & DISTRIBUTION ~ DAVID ASHLEY | 904-665-8484 |
| H. JEA ~ SEWER COLLECTION & DISTRIBUTION ~ JOSH PARKER | 904-665-6052 |
| I. JEA ~ GENERAL INFORMATION | 904-665-6000 |
| J. JEA ~ PROJECT OUTREACH | 904-665-7500 |
| K. JEA ~ POWER OUTAGES | 904-665-6000 |
| L. JEA ~ SEWER PROBLEMS | 904-665-4802 |
| M. JEA ~ WATER PROBLEMS | 904-665-4801 |
| N. JEA ~ WATER & SEWER LOCATES | 904-665-8410 |
| O. NASSAU COUNTY ~ PUBLIC WORKS ~ CHARLES HOUSTON | 904-491-7334 |
| P. ST. JOHNS COUNTY ~ RIGHT-OF-WAY PERMITTING ~ RICK MAULDIN | 904-209-0134 |
| Q. ST. JOHNS COUNTY ~ TRAFFIC SIGNALS ~ HANK MEIN | 904-209-0173 |
| R. COMCAST ~ EMERGENCY HOTLINE | 904-380-6274 |
| S. TECO/PEOPLES GAS ~ BEN MOBLEY | 904-545-8958 |
| T. SUNSHINE ONE CALL | 811 |

# GENERAL LEGEND

| | EXISTING | PROPOSED |
|---|---|---|
| RIGHT OF WAY LINE | | |
| CENTER LINE | | |
| LIMITS OF CONSTRUCTION | | L.O.C. |
| FENCE (HEIGHT & MAT'L. INDICATED) | 6' CHAIN LINK | 6' CHAIN LINK |
| DITCH OR SWALE | | |
| TOP OF BANK | TOB | |
| DRAIN PIPE | D | D |
| CATCH BASIN | | |
| STORM DRAIN GRATE | | |
| STORM SEWER (SIZE & MAT'L. INDICATED) | 24" RCP | 24" RCP |
| STORM SEWER, REPLACEMENT (IN CASE 10 TRENCH) SIZE, MAT'L. INDICATED | | |
| STORM SEWER (SIZE & MAT'L. INDICATED) | | |
| CULVERT W/ENDWALLS (SIZE & MAT'L. INDICATED) | 18" CMP | 18" CMP |
| WATER MAIN SIZE, TYPE INDICATED | W 6" PVC W | W 8" PVC |
| WATER MAIN (IN CASE 10 TRENCH) SIZE, TYPE INDICATED | | 8" PVC |
| GRAVITY SEWER SIZE, TYPE INDICATED | S 8" PVC S | |
| SEWER FORCE MAIN SIZE, TYPE INDICATED | FM 10" PVC | 10" PVC |
| LINE VALVE | | |
| CHECK VALVE | | |
| FIRE HYDRANT | | |
| VALVE (TYPE INDICATED) | | |
| END CAP | | |
| PLUG (AT END OF LINE) | | |
| VALVE (TYPE INDICATED) | | |
| REDUCER | | |
| FIRE HYDRANT | | |
| HOUSE CONNECTION (SEWER) | HC | OR 1275 NHC |
| SPOT ELEVATION | OR × (100.00) | MH1 |
| MANHOLE - TYPE (IF INDICATED ) E - ELECTRIC S - SANITARY D - STORM T - TELEPHONE | | |
| CLEAN OUT | C.O. | |
| SPRINKLER HEAD | SPR | |
| TEMPORARY SAMPLING TAP POINT (BACTERIOLOGICAL SAMPLING POINT) | | SAMPLE TAP NO. TAP NO. |
| SILT HAY BARRIER | | |
| SIDEWALK | | |

# UTILITY SYMBOLS

| | |
|---|---|
| ELECTRIC POLE OR S.B.T. POLE (WOOD) | PP ○ OR PP □ (WITH LIGHT) |
| WOOD POWER POLE | ○ WPP |
| ELECTRIC POLE OR S.B.T. POLE (CONC.) | PP □ OR PP □ (WITH LIGHT) |
| CONCRETE POWER POLE | □ CPP |
| GUY WIRE | ⟶ |
| TRAFFIC SIGNAL POLE | TS △ |
| IRON PIPE | ○ I.P. |
| OVERHEAD ELECTRIC | — — OHE— — — |
| UNDERGROUND ELECTRIC | — — UGE— — — |
| OVERHEAD TELEPHONE | — — OT— — — |
| UNDERGROUND TELEPHONE | — — UGT— — — |
| GAS MAIN (SIZE & MAT'L. INDICATED) | — — GAS— — — |
| CABLE TELEVISION | CATV |
| FIBER OPTIC LINE | FO |
| UNDERGROUND CABLE (TYPE UNDETERMINED) | — UG— — UG— |
| WATER METER | □ WM |
| WATER METER WITH TOUCHREAD | □ WM(TR) |
| TELEPHONE BOX | □T |
| CATV BOX | □CATV |
| CONCRETE MONUMENT | □CM |
| GAS VALVE | ⊕ |
| SOIL BORING (NUMBER INDICATED) | SB-1 |
| SOFT DIG (NUMBER INDICATED) | SD1 |
| TREE, SIZE & TYPE INDICATED | ● 12" ○ |
| MAIL BOX | MB |
| SIGN - TYPE INDICATED | OR SIGN |
| BUSH, SHRUB OR HEDGE | SHRUB |
| FULL DEPTH ASPHALT PAVEMENT REPLACEMENT | |
| ASPHALT PAVEMENT OVERLAY | |
| INDICATES DRIVEWAY/SIDEWALK TO BE REMOVED AND REPLACED | |

# INSTALLATION NOTES:

| NOT APPLICABLE | APPLICABLE | |
|---|---|---|
| ☒ | ☐ | 1. CONTRACTOR TO REHABILITATE ALL MANHOLES ON PIPE BURST SEWERS VIA COATING/LINING PER JEA SPECIFICATION 446-2, UNLESS OTHERWISE NOTED ON THE PLANS. |
| ☒ | ☐ | 2. CONTRACTOR TO RENEW, REHABILITATE, REPLACE OR REINSTALL AS APPLICABLE ALL SERVICE LATERALS TO R.O.W. LINE. |
| ☐ | ☒ | 3. CONTRACTOR TO INSTALL SEWER SERVICE PIPING A MINIMUM OF 60 INCHES BELOW GRADE. WHERE NEW SANITARY SEWER MAIN IS LESS THAN 5 FEET DEEP, THE SEWER SERVICE PIPE SHALL BE INSTALLED AS DEEP AS POSSIBLE. |
| ☐ | ☒ | 4. WHEN THE DISTANCE BETWEEN A POWER POLE AND THE TRENCH IS LESS THAN THE TRENCH DEPTH, THE CONTRACTOR SHALL BE RESPONSIBLE FOR COORDINATING WITH JEA ELECTRICAL PERSONNEL TO SECURE POWER POLES. THE CONTACTS FOR JEA ARE AS FOLLOWS:<br>NORTHSIDE~EAST of US-1 MIKE CORBITT @ 665-7991 (mobile 662-0635)<br>NORTHSIDE~WEST of US-1 ANDY YEAGER @ 665-7998 (mobile 662-0622)<br>NORTHSIDE~BACKUP ALAN AINSLEY @ 665-7303 (mobile 662-6557)<br>SOUTHSIDE~SOUTH of BEACH BLVD. TOM KERNS @ 665-6847 (mobile 860-1687)<br>SOUTHSIDE~NORTH of BEACH BLVD. DERYL BASFORD @ 665-6855 (mobile 662-0616)<br>SOUTHSIDE~BACKUP EDDIE GALES @ 665-6855 (mobile 662-0616)<br>A MINIMUM OF TWO (2) WORKING DAYS NOTICE IS REQUIRED FOR AN OUTSIDE MEETING WITH JEA ELECTRICAL TO DISCUSS THE REQUIRED WORK. ADDITIONAL TIME WILL BE REQUIRED BY JEA ELECTRICAL FOR ANY REQUIRED WORK TO BE ACCOMPLISHED. |
| ☐ | ☒ | 5. ALL NEW STORM DRAIN PIPE JOINTS SHALL BE WRAPPED WITH FILTER FABRIC. |
| ☐ | ☒ | 6. THE DESIGN FOR THE PROJECT IS BASED UPON THE "OPEN-CUT" METHOD OF CONSTRUCTION. IF USING ALTERNATIVE MEANS OR METHODS, THE CONTRACTOR SHALL FOLLOW ALL APPLICABLE STANDARDS FOR THAT MEANS OR METHOD. |
| ☐ | ☒ | 7. THE CONTRACTOR SHALL MINIMIZE SERVICE INTERRUPTIONS AT SERVICE CONNECTIONS. THE MEANS AND METHODS SHALL BE LEFT TO THE DISCRETION OF THE CONTRACTOR, SUBJECT TO THE REQUIREMENTS OF THE CONTRACT SPECIFICATIONS. NO EXISTING ACTIVE SERVICE SHALL BE LEFT INTERRUPTED AT THE END OF THE WORK DAY. |
| ☐ | ☒ | 8. CONTRACTOR SHALL PROVIDE ADDITIONAL CORPORATION STOPS FOR FILLING AND DRAINING PURPOSES DURING CONSTRUCTION AS NEEDED. CORPORATION STOPS ARE TO BE PLUGGED AND LEFT IN PLACE. INDICATE CORPORATION STOP LOCATIONS ON RECORD DRAWINGS (AS-BUILTS). |
| ☐ | ☒ | 9. WATER AND SEWER SERVICES SHALL BE TRANSFERRED TO THE NEW MAIN UPON COMPLETION AND F.D.E.P./J.E.A. CERTIFICATION, AND PRIOR TO THE EXISTING MAINS BEING ABANDONED. |
| ☐ | ☒ | 10. IF EXISTING VALVES ARE IN UNPAVED AREAS AND ARE TO BE TAKEN OUT OF SERVICE, THEY SHALL BE CLOSED AND THE VALVE BOX AND COVER SHALL BE REMOVED. IF THE VALVES ARE UNDER PAVED AREAS, THEY SHALL BE CLOSED, THE VALVE BOX GROUT FILLED AND THE COVER REMOVED. |
| ☒ | ☐ | 11. CONTRACTOR SHALL REPLACE EXISTING WATER METER BOXES WHEN DEEMED NECESSARY BY THE JEA INSPECTOR. |
| ☐ | ☒ | 12. CONTRACTOR TO PROVIDE ADDITIONAL DEPTH OF BURY VIA PIPE JOINT DEFLECTION TO ACCOMMODATE VALVE SELECTION PER JEA STANDARDS. |
| ☒ | ☐ | 13. WATER METERS MAY REQUIRE RELOCATION FOR CONSTRUCTION, CONTRACTOR SHALL CONTACT JEA METER DEPARTMENT AND RELOCATE WATER METERS AS NECESSARY. |
| ☐ | ☒ | 14. PRIOR TO COMMENCING ANY EXCAVATION OR GRADING, THE CONTRACTOR SHALL OBTAIN ALL GEOTECHNICAL AND TOPOGRAPHIC SURVEY DATA AND LOCATIONS OF ABOVE GROUND AND UNDERGROUND UTILITIES. SHOULD THE CONTRACTOR DISCOVER ANY INACCURACIES, ERRORS OR OMISSIONS IN THE SURVEY DATA, HE SHALL IMMEDIATELY NOTIFY THE DESIGN ENGINEER IN ORDER THAT PROPER ADJUSTMENTS CAN BE ANTICIPATED AND ORDERED. |
| ☒ | ☐ | 15. SHEET PILING WILL BE REQUIRED ON ALL EXCAVATIONS DEEPER THAN 16 FEET. |

# EXISTING UTILITY PROTECTION:

1. IN ORDER TO REDUCE THE DISRUPTION AND COST OF UTILITY DAMAGES OCCURRING IN THE DUVAL COUNTY RIGHT-OF-WAY AND EASEMENTS, THE CONTRACTOR SHALL PREVENT DAMAGES TO EXISTING UTILITIES CAUSED BY HIS WORK THROUGH FIELD VERIFICATION OF THE LOCATION OF THE EXISTING UTILITIES. IN THE CASE OF OPEN EXCAVATION, VERIFICATION MAY BE PERFORMED DURING THE CONTRACTORS WORK. IN THE CASE OF DIRECTIONAL DRILLING, VERIFICATION SHALL TAKE PLACE PRIOR TO MOBILIZATION OF THE DRILLING EQUIPMENT.
2. THE CONTRACTOR SHALL VERIFY THE LOCATION OF EXISTING UTILITIES AS NEEDED TO AVOID CONTACT. EXISTING UTILITIES SHALL BE EXPOSED USING DETECTION EQUIPMENT OR OTHER ACCEPTABLE MEANS. SUCH METHODS MAY INCLUDE BUT SHALL NOT BE LIMITED TO "SOFT DIG" EQUIPMENT AND GROUND PENETRATING RADAR (GPR). THE EXCAVATOR SHALL BE HELD LIABLE FOR DAMAGES CAUSED TO THE CITY'S/JEA'S INFRASTRUCTURE AND THE EXISTING FACILITIES OF OTHER UTILITY COMPANIES.
3. IT SHALL BE THE SOLE RESPONSIBILITY OF THE CONTRACTOR TO LOCATE AND AVOID ALL UTILITIES, OTHER STRUCTURES AND OBSTRUCTIONS BOTH ABOVE AND BELOW GROUND SURFACE. ALL DAMAGE RESULTING FROM THE CONTRACTOR'S FAILURE TO COMPLY WITH THIS REQUIREMENT SHALL BE REPAIRED AT THE CONTRACTOR'S EXPENSE.

## REFERENCE DRAWINGS

| NOT APPLICABLE | APPLICABLE | DRAWING NUMBER | SHEET TITLE |
|---|---|---|---|
| ☒ | ☐ | W-STD-1 | WATER MAIN DETAILS |
| ☒ | ☐ | W-STD-2 | WATER MAIN DETAILS |
| ☒ | ☐ | W-STD-3 | WATER MAIN DETAILS |
| ☒ | ☐ | W-STD-4 | WATER MAIN DETAILS |
| ☒ | ☐ | W-STD-5 | WATER MAIN DETAILS |
| ☐ | ☒ | S-STD-1 | SANITARY SEWER DETAILS |
| ☐ | ☒ | S-STD-2 | SANITARY SEWER DETAILS |
| ☐ | ☒ | S-STD-3 | SANITARY SEWER DETAILS |
| ☐ | ☒ | S-STD-4 | SANITARY SEWER DETAILS |
| ☐ | ☒ | S-STD-5 | SANITARY SEWER DETAILS |
| | | | PUMP STATION CONSTRUCTION DETAILS |
| ☐ | ☒ | PS-STD-1 | MISCELLANEOUS DETAILS |
| | | | PUMP STATION ELECTRIC DETAILS |
| ☐ | ☒ | PS-STD-2 | ELECTRIC DETAILS |
| ☐ | ☒ | PS-STD-3 | DEMARCATION BOX & POWER DISTRIBUTION PANEL |
| ☐ | ☒ | PS-STD-4 | SCADA INSTALLATION |
| ☐ | ☒ | PS-STD-5 | SCADA INSTALLATION |
| ☐ | ☒ | PS-STD-6 | GROUNDING PLAN |
| ☐ | ☒ | PS-STD-7 | GROUNDING DETAILS |
| ☒ | ☐ | PS-STD-8 | ELECTRIC SINGLE LINE DIAGRAM |

NOTE:

STANDARD DRAWINGS ARE APPLICABLE FOR ALL PROJECTS, INCORPORATED BY REFERENCE AND ARE AVAILABLE AT JEA.COM

DATE:
JONATHAN Z GOLDMAN
PE NO. PE 0048925

| REV. NO. | DATE | DRWN | CHKD | REMARKS |
|---|---|---|---|---|
| | | | | |

DESIGNED BY: X
DRAWN BY: A. NUNES
SHEET CHK'D BY: X
CROSS CHK'D BY: X
APPROVED BY: X
DATE: JANUARY 2020

CDM Smith
4651 Salisbury Road, Suite 420
Jacksonville, FL 32256
Tel: (904) 731-7109
FL COA No. EB-0000020

JEA

WILSON BLVD. (180-45) AND 118th ST. (180-47)
MASTER PUMP STATION IMPROVEMENTS

JEA GENERAL NOTES

PROJECT NO. 6103-234169
FILE NAME: G002GNSI.DWG

SHEET NO.
G-2

60% SUBMITTAL - NOT FOR CONSTRUCTION

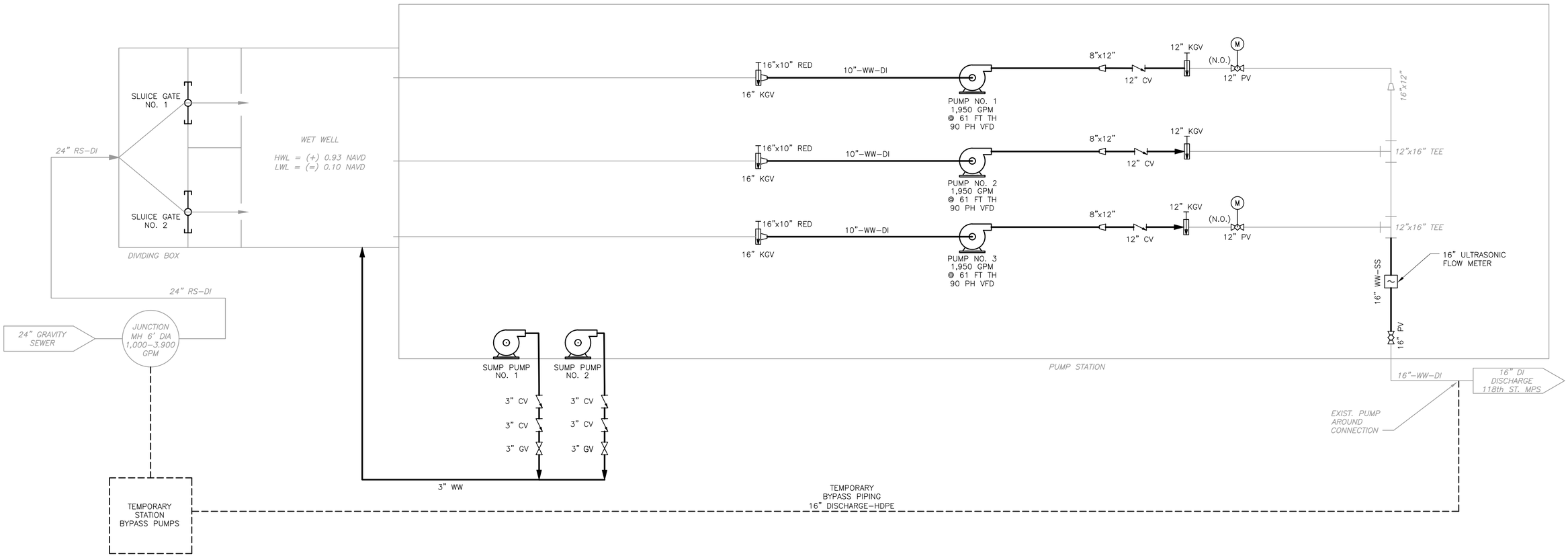


XREFs: [CDMS_2234] Images: []
Last saved by: ANUNESAL Time: 12/11/2019 11:59:54 AM
pw:\\pw.cdmsmith.com:PW_XM1\6103\234169 JEA PDB\04 Design Services NM_60%\01 General\10 CADD\G003PRDI.dwg
©2020 CDM SMITH ALL RIGHTS RESERVED.
REUSE OF DOCUMENTS: THESE DOCUMENTS AND DESIGNS PROVIDED BY PROFESSIONAL SERVICE, INCORPORATED HEREIN, ARE THE PROPERTY OF CDM SMITH AND ARE NOT TO BE USED, IN WHOLE OR PART, FOR ANY OTHER PROJECT WITHOUT THE WRITTEN AUTHORIZATION OF CDM SMITH.

| REV. NO. | DATE | DRWN | CHKD | REMARKS |
|---|---|---|---|---|
| | | | | |

DESIGNED BY: X
DRAWN BY: A. NUNES
SHEET CHK'D BY: X
CROSS CHK'D BY: X
APPROVED BY: X
DATE: JANUARY 2020

CDM Smith
4651 Salisbury Road, Suite 420
Jacksonville, FL 32256
Tel: (904) 731-7109
FL COA No. EB-0000020

JEA

WILSON BLVD. (180-45) AND 118th ST. (180-47)
MASTER PUMP STATION IMPROVEMENTS

WILSON BLVD. PUMP STATION
PROCESS FLOW DIAGRAM

DATE:
JONATHAN Z GOLDMAN
PE NO. PE 0048925

PROJECT NO. 6103-234169
FILE NAME: G003PRDI.DWG

SHEET NO.
G-3

60% SUBMITTAL - NOT FOR CONSTRUCTION

XREFs: [CDMS_2234] Images: []
Last saved by: NUNESAL Time: 12/3/2019 2:58:52 PM
p:\\pw.cdmsmith.com\PW_XM\6103\234169 JEA PDB\04 Design Services NM_60%\01 General\10 CADD\G004PRDI.dwg
©2020 CDM SMITH ALL RIGHTS RESERVED.
REUSE OF DOCUMENTS: THESE DOCUMENTS AND DESIGNS PROVIDED BY PROFESSIONAL SERVICE, INCORPORATED HEREIN, ARE THE PROPERTY OF CDM SMITH AND ARE NOT TO BE USED, IN WHOLE OR PART, FOR ANY OTHER PROJECT WITHOUT THE WRITTEN AUTHORIZATION OF CDM SMITH.

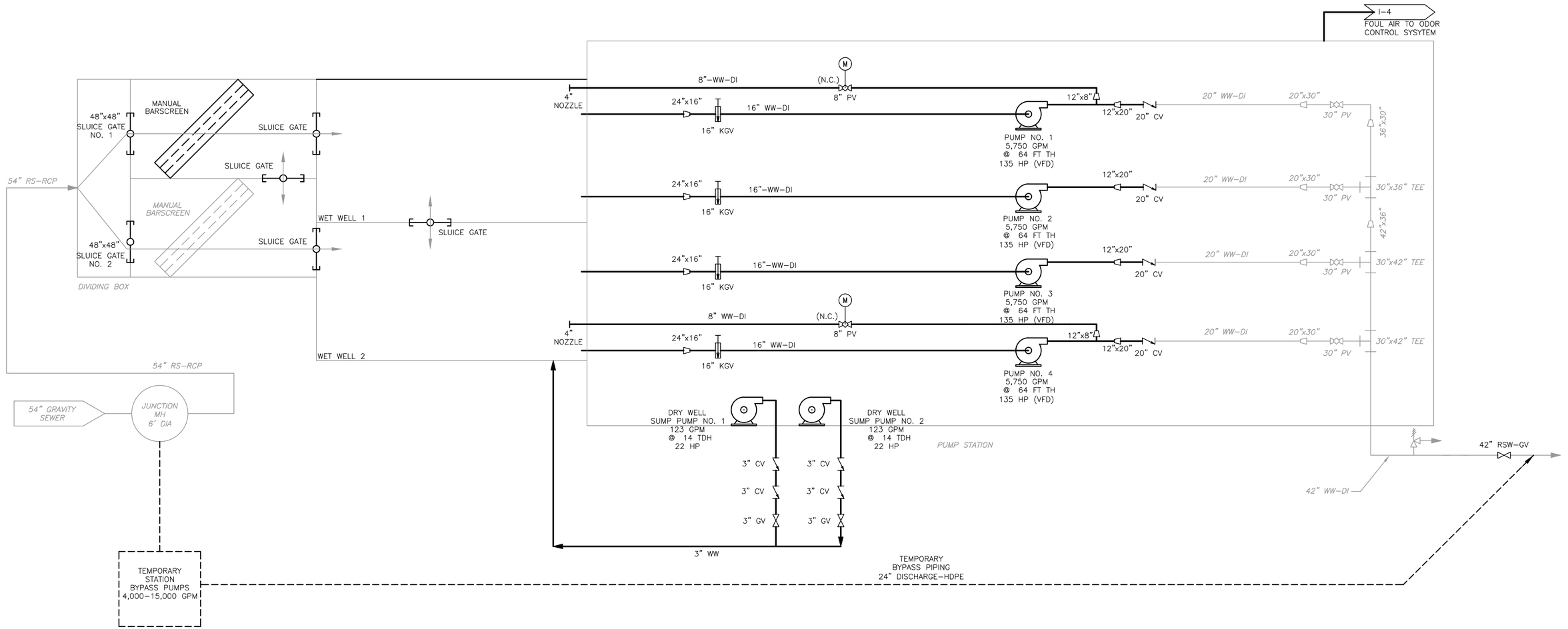


| REV. NO. | DATE | DRWN | CHKD | REMARKS |
|---|---|---|---|---|

DESIGNED BY: X
DRAWN BY: A. NUNES
SHEET CHK'D BY: X
CROSS CHK'D BY: X
APPROVED BY: X
DATE: JANUARY 2020

CDM Smith
4651 Salisbury Road, Suite 420
Jacksonville, FL 32256
Tel: (904) 731-7109
FL COA No. EB-0000020

JEA

WILSON BLVD. (180-45) AND 118th ST. (180-47)
MASTER PUMP STATION IMPROVEMENTS

118TH STREET PUMP STATION
PROCESS FLOW DIAGRAM

DATE:
JONATHAN Z GOLDMAN
PE NO. PE 0048925

PROJECT NO. 6103-234169
FILE NAME: G004PRDI.DWG

SHEET NO.
G-4

60% SUBMITTAL - NOT FOR CONSTRUCTION

SURVEYOR'S NOTES:

1) THE UNDERSIGNED SURVEYOR HAS NOT BEEN PROVIDED A CURRENT TITLE OPINION OF MATTERS AFFECTING THE TITLE TO OR BOUNDARY OF THE SUBJECT PROPERTY. IT IS POSSIBLE THAT THERE ARE DEEDS OF RECORD, UNRECORDED DEEDS, EASEMENTS OR OTHER INSTRUMENTS WHICH COULD AFFECT THE BOUNDARIES.
2) THIS DOES NOT PURPORT TO BE A BOUNDARY SURVEY.
3) OWNERSHIP OF FENCES, IF ANY, IS UNDETERMINED.
4) THIS IS A SURFACE LOCATION SURVEY ONLY; UNDERGROUND UTILITIES WERE IDENTIFIED BY UTILITY MARKINGS PERFORMED BY OTHERS AND ABOVE GROUND APPURTENANCES ONLY.
5) THIS IS A COPYRIGHTED DOCUMENT; NO PORTION OF IT MAY BE REPRODUCED, WHOLLY OR IN PART, WITHOUT THE EXPRESSED WRITTEN PERMISSION OF R.E. HOLLAND & ASSOCIATES, INC.
6) THE STREET ADDRESS, IF SHOWN, IS AS FIELD POSTED ON DATE OF SURVEY.
7) THIS SURVEY MAP DOES NOT REFLECT OR DETERMINE OWNERSHIP.
8) THE RELATIVE LINEAR DISTANCE ACCURACY FOR THIS SURVEY EXCEEDS 1:10,000.
9) ALL MEASUREMENTS ARE IN U.S. STANDARD FEET AND WERE MADE WITH A THEODOLITE AND ELECTRONIC DISTANCE MEASURING DEVICE AND/OR STEEL TAPE.
10) THE FIELD WORK WAS COMPLETED ON 9-13-2019.
11) REFERENCE BENCHMARK: SURVEY DISK DESIGNATION A 572 SET FLUSH IN THE TOP OF A CONC WALK, LEVEL WITH SR 103, LOCATED 104.2' W OF A WOOD PP#5432, 31.6' S OF APPROX CL OF SR 128, 6.8'W/NW OF CLF POST & 0.6'N OF METAL GUARDRAIL ON THE SOUTH SIDE OF SR 128, CEDAR CREEK BRIDGE. ELEVATION: 10.78 (NAVD88)

# MAP SHOWING A LIMITED TOPOGRAPHICAL SURVEY OF

A PORTION OF LOT 9, BLOCK 5, AS SHOWN ON THE PLAT OF ORTEGA FARMS, AS RECORDED IN PLAT BOOK 3, PAGE 79 OF THE CURRENT PUBLIC RECORDS OF DUVAL COUNTY, FLORIDA, LYING IN SECTION 42, TOWNSHIP 3 SOUTH, RANGE 26 EAST, DUVAL COUNTY, FLORIDA

PREPARED FOR:
CDM SMITH

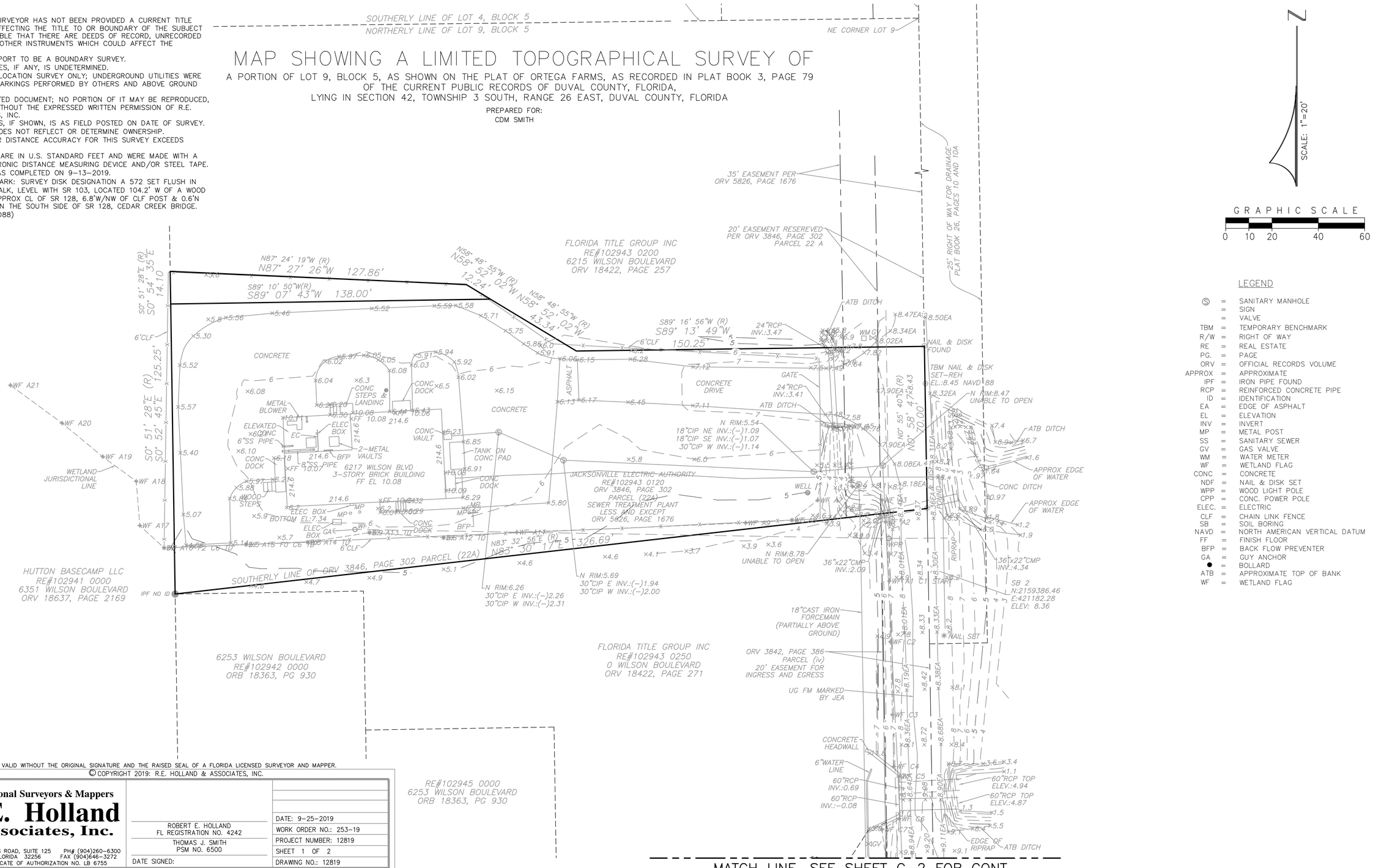


MATCH LINE. SEE SHEET C-2 FOR CONT.

LEGEND

| | | |
|---|---|---|
| Ⓢ | = | SANITARY MANHOLE |
| | = | SIGN |
| | = | VALVE |
| TBM | = | TEMPORARY BENCHMARK |
| R/W | = | RIGHT OF WAY |
| RE | = | REAL ESTATE |
| PG. | = | PAGE |
| ORV | = | OFFICIAL RECORDS VOLUME |
| APPROX | = | APPROXIMATE |
| IPF | = | IRON PIPE FOUND |
| RCP | = | REINFORCED CONCRETE PIPE |
| ID | = | IDENTIFICATION |
| EA | = | EDGE OF ASPHALT |
| EL | = | ELEVATION |
| INV | = | INVERT |
| MP | = | METAL POST |
| SS | = | SANITARY SEWER |
| GV | = | GAS VALVE |
| WM | = | WATER METER |
| WF | = | WETLAND FLAG |
| CONC | = | CONCRETE |
| NDF | = | NAIL & DISK SET |
| WPP | = | WOOD LIGHT POLE |
| CPP | = | CONC. POWER POLE |
| ELEC. | = | ELECTRIC |
| CLF | = | CHAIN LINK FENCE |
| SB | = | SOIL BORING |
| NAVD | = | NORTH AMERICAN VERTICAL DATUM |
| FF | = | FINISH FLOOR |
| BFP | = | BACK FLOW PREVENTER |
| GA | = | GUY ANCHOR |
| ● | = | BOLLARD |
| ATB | = | APPROXIMATE TOP OF BANK |
| WF | = | WETLAND FLAG |

THIS SURVEY IS NOT VALID WITHOUT THE ORIGINAL SIGNATURE AND THE RAISED SEAL OF A FLORIDA LICENSED SURVEYOR AND MAPPER.

© COPYRIGHT 2019: R.E. HOLLAND & ASSOCIATES, INC.

**Professional Surveyors & Mappers**
**R. E. Holland & Associates, Inc.**
9770 BAYMEADOWS ROAD, SUITE 125 PH# (904)260-6300
JACKSONVILLE, FLORIDA 32256 FAX (904)646-3272
FLORIDA CERTIFICATE OF AUTHORIZATION NO. LB 6755

ROBERT E. HOLLAND
FL REGISTRATION NO. 4242
THOMAS J. SMITH
PSM NO. 6500
DATE SIGNED:

DATE: 9-25-2019
WORK ORDER NO.: 253-19
PROJECT NUMBER: 12819
SHEET 1 OF 2
DRAWING NO.: 12819

PARTY CHIEF: RS COMPUTED BY: MMS CADD TECH: MMS CADD FILE: 12819.DWG DC FILE NO.: 12819 F.B.: x PG.: x

| REV. NO. | DATE | DRWN | CHKD | REMARKS |
|---|---|---|---|---|
| | | | | |

DESIGNED BY: X
DRAWN BY: X
SHEET CHK'D BY: X
CROSS CHK'D BY: X
APPROVED BY: X
DATE: JANUARY 2020

CDM Smith
4651 Salisbury Road, Suite 420
Jacksonville, FL 32256
Tel: (904) 731-7109
FL COA No. EB-0000020

JEA

WILSON BLVD. (180-45) AND 118th ST. (180-47)
MASTER PUMP STATION IMPROVEMENTS

WILSON BLVD. MASTER PUMP STATION
SURVEY 1 of 2

PROJECT NO. 6103-234169
FILE NAME: C001STPL.DWG
SHEET NO.
C-1

60% SUBMITTAL - NOT FOR CONSTRUCTION

XREFs: [CDMS_2436, CEP0005S] Images: []
Last saved by: NUNESAL Time: 1/27/2020 2:36:11 PM
pw:\\pw.cdmsmith.com:PW_XM1\6103\234169 JEA PDB\04 Design Services NM_60%\02 Civil\10 CADD\C001STPL.dwg
© 2020 CDM SMITH ALL RIGHTS RESERVED
REUSE OF DOCUMENTS: THESE DOCUMENTS AND DESIGNS PROVIDED BY PROFESSIONAL SERVICE, INCORPORATED HEREIN, ARE THE PROPERTY OF CDM SMITH AND ARE NOT TO BE USED, IN WHOLE OR PART, FOR ANY OTHER PROJECT WITHOUT THE WRITTEN AUTHORIZATION OF CDM SMITH.

SURVEYOR'S NOTES:

1) THE UNDERSIGNED SURVEYOR HAS NOT BEEN PROVIDED A CURRENT TITLE OPINION OF MATTERS AFFECTING THE TITLE TO OR BOUNDARY OF THE SUBJECT PROPERTY. IT IS POSSIBLE THAT THERE ARE DEEDS OF RECORD, UNRECORDED DEEDS, EASEMENTS OR OTHER INSTRUMENTS WHICH COULD AFFECT THE BOUNDARIES.
2) THIS DOES NOT PURPORT TO BE A BOUNDARY SURVEY.
3) OWNERSHIP OF FENCES, IF ANY, IS UNDETERMINED.
4) THIS IS A SURFACE LOCATION SURVEY ONLY; UNDERGROUND UTILITIES WERE IDENTIFIED BY UTILITY MARKINGS PERFORMED BY OTHERS AND ABOVE GROUND APPURTENANCES ONLY.
5) THIS IS A COPYRIGHTED DOCUMENT; NO PORTION OF IT MAY BE REPRODUCED, WHOLLY OR IN PART, WITHOUT THE EXPRESSED WRITTEN PERMISSION OF R.E. HOLLAND & ASSOCIATES, INC.
6) THE STREET ADDRESS, IF SHOWN, IS AS FIELD POSTED ON DATE OF SURVEY.
7) THIS SURVEY MAP DOES NOT REFLECT OR DETERMINE OWNERSHIP.
8) THE RELATIVE LINEAR DISTANCE ACCURACY FOR THIS SURVEY EXCEEDS 1:10,000.
9) ALL MEASUREMENTS ARE IN U.S. STANDARD FEET AND WERE MADE WITH A THEODOLITE AND ELECTRONIC DISTANCE MEASURING DEVICE AND/OR STEEL TAPE.
10) THE FIELD WORK WAS COMPLETED ON 9-13-2019.
11) REFERENCE BENCHMARK: SURVEY DISK DESIGNATION A 572 SET FLUSH IN THE TOP OF A CONC WALK, LEVEL WITH SR 103, LOCATED 104.2' W OF A WOOD PP#5432, 31.6' S OF APPROX CL OF SR 128, 6.8'W/NW OF CLF POST & 0.6'N OF METAL GUARDRAIL ON THE SOUTH SIDE OF SR 128, CEDAR CREEK BRIDGE. ELEVATION: 10.78 (NAVD88)

# MAP SHOWING A LIMITED TOPOGRAPHICAL SURVEY OF

A PORTION OF LOT 9, BLOCK 5, AS SHOWN ON THE PLAT OF ORTEGA FARMS, AS RECORDED IN PLAT BOOK 3, PAGE 79 OF THE CURRENT PUBLIC RECORDS OF DUVAL COUNTY, FLORIDA, LYING IN SECTION 42, TOWNSHIP 3 SOUTH, RANGE 26 EAST, DUVAL COUNTY, FLORIDA

PREPARED FOR:
CDM SMITH

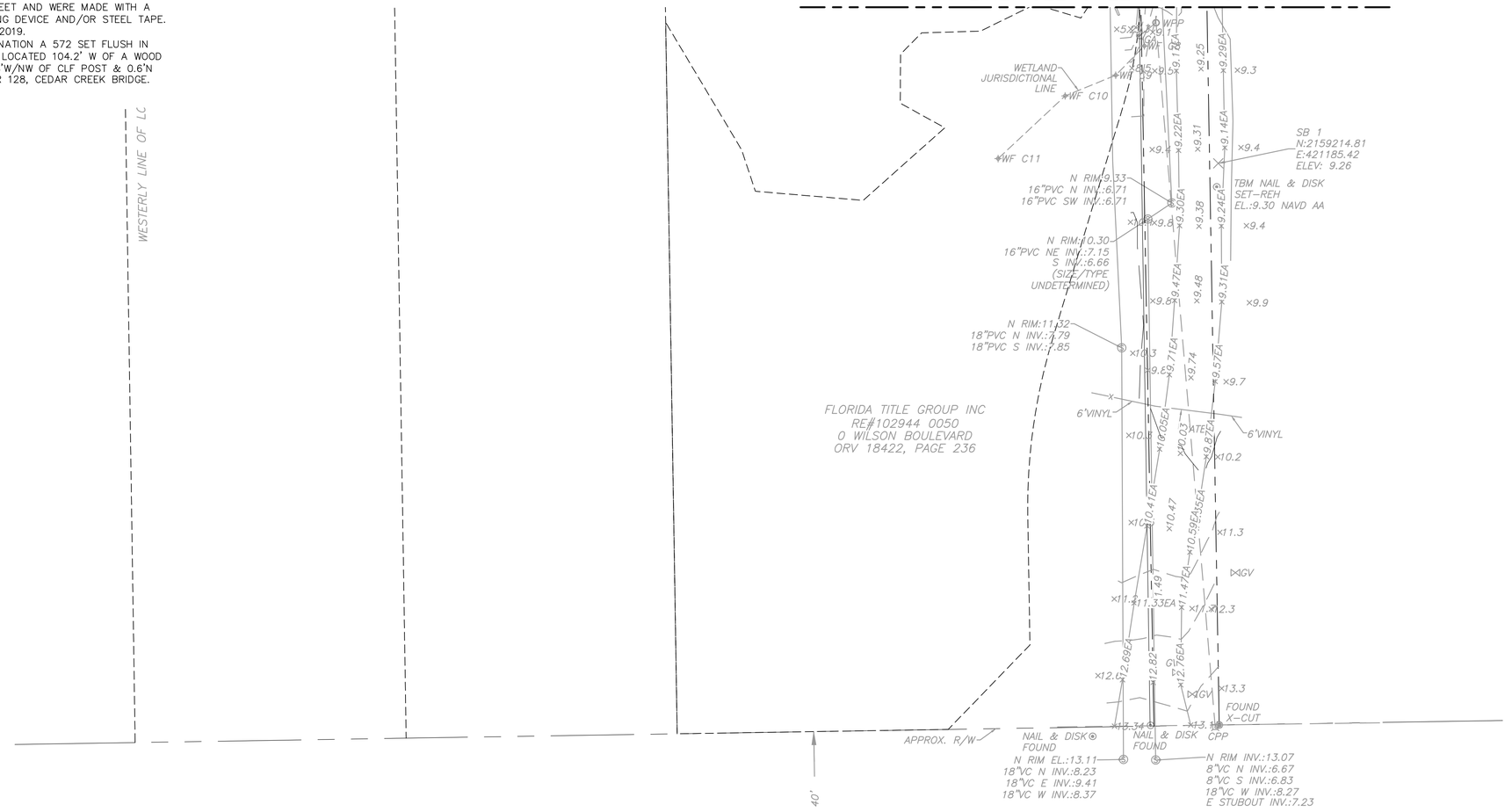


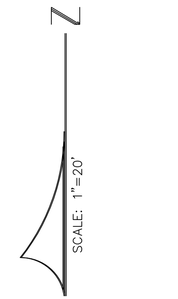


GRAPHIC SCALE
0 10 20 40 60

LEGEND

| | | |
|---|---|---|
| Ⓢ | = | SANITARY MANHOLE |
| | = | SIGN |
| | = | VALVE |
| TBM | = | TEMPORARY BENCHMARK |
| R/W | = | RIGHT OF WAY |
| RE | = | REAL ESTATE |
| PG. | = | PAGE |
| ORV | = | OFFICIAL RECORDS VOLUME |
| APPROX | = | APPROXIMATE |
| IPF | = | IRON PIPE FOUND |
| RCP | = | REINFORCED CONCRETE PIPE |
| ID | = | IDENTIFICATION |
| EA | = | EDGE OF ASPHALT |
| EL | = | ELEVATION |
| INV | = | INVERT |
| MP | = | METAL POST |
| SS | = | SANITARY SEWER |
| GV | = | GAS VALVE |
| WM | = | WATER METER |
| WF | = | WETLAND FLAG |
| CONC | = | CONCRETE |
| NDF | = | NAIL & DISK SET |
| WPP | = | WOOD LIGHT POLE |
| CPP | = | CONC. POWER POLE |
| ELEC. | = | ELECTRIC |
| CLF | = | CHAIN LINK FENCE |
| SB | = | SOIL BORING |
| NAVD | = | NORTH AMERICAN VERTICAL DATUM |
| FF | = | FINISH FLOOR |
| BFP | = | BACK FLOW PREVENTER |
| GA | = | GUY ANCHOR |
| ● | = | BOLLARD |
| ATB | = | APPROXIMATE TOP OF BANK |
| WF | = | WETLAND FLAG |

THIS SURVEY IS NOT VALID WITHOUT THE ORIGINAL SIGNATURE AND THE RAISED SEAL OF A FLORIDA LICENSED SURVEYOR AND MAPPER.

© COPYRIGHT 2019: R.E. HOLLAND & ASSOCIATES, INC.

Professional Surveyors & Mappers
**R. E. Holland & Associates, Inc.**
9770 BAYMEADOWS ROAD, SUITE 125 PH# (904)260-6300
JACKSONVILLE, FLORIDA 32256 FAX (904)646-3272
FLORIDA CERTIFICATE OF AUTHORIZATION NO. LB 6755

ROBERT E. HOLLAND
FL REGISTRATION NO. 4242
THOMAS J. SMITH
PSM NO. 6500
DATE SIGNED:

DATE: 9-25-2019
WORK ORDER NO.: 253-19
PROJECT NUMBER: 12819
SHEET 1 OF 2
DRAWING NO.: 12819

PARTY CHIEF: RS COMPUTED BY: MMS CADD TECH: MMS CADD FILE: 12819.DWG DC FILE NO.: 12819 F.B.: x PG.: x

| REV. NO. | DATE | DRWN | CHKD | REMARKS |
|---|---|---|---|---|

DESIGNED BY: X
DRAWN BY: X
SHEET CHK'D BY: X
CROSS CHK'D BY: X
APPROVED BY: X
DATE: JANUARY 2020

CDM Smith
4651 Salisbury Road, Suite 420
Jacksonville, FL 32256
Tel: (904) 731-7109
FL COA No. EB-0000020

JEA

WILSON BLVD. (180-45) AND 118th ST. (180-47)
MASTER PUMP STATION IMPROVEMENTS

WILSON BLVD. MASTER PUMP STATION
SURVEY 2 of 2

PROJECT NO. 6103-234169
FILE NAME: C002STPL.DWG
SHEET NO.
C-2

60% SUBMITTAL - NOT FOR CONSTRUCTION

XREFs: [CDMS_2436_CEP000SS] Images: []
Last saved by: NUNESAL Time: 1/27/2020 1:15:53 PM
pw:\\pw.cdmsmith.com:PW_XM1\6103\234169 JEA PDB\04 Design Services NM_60%\02 Civil\10 CADD\C002STPL.dwg
© 2020 CDM SMITH ALL RIGHTS RESERVED
REUSE OF DOCUMENTS: THESE DOCUMENTS AND DESIGNS PROVIDED BY PROFESSIONAL SERVICE, INCORPORATED HEREIN, ARE THE PROPERTY OF CDM SMITH AND ARE NOT TO BE USED, IN WHOLE OR PART, FOR ANY OTHER PROJECT WITHOUT THE WRITTEN AUTHORIZATION OF CDM SMITH.

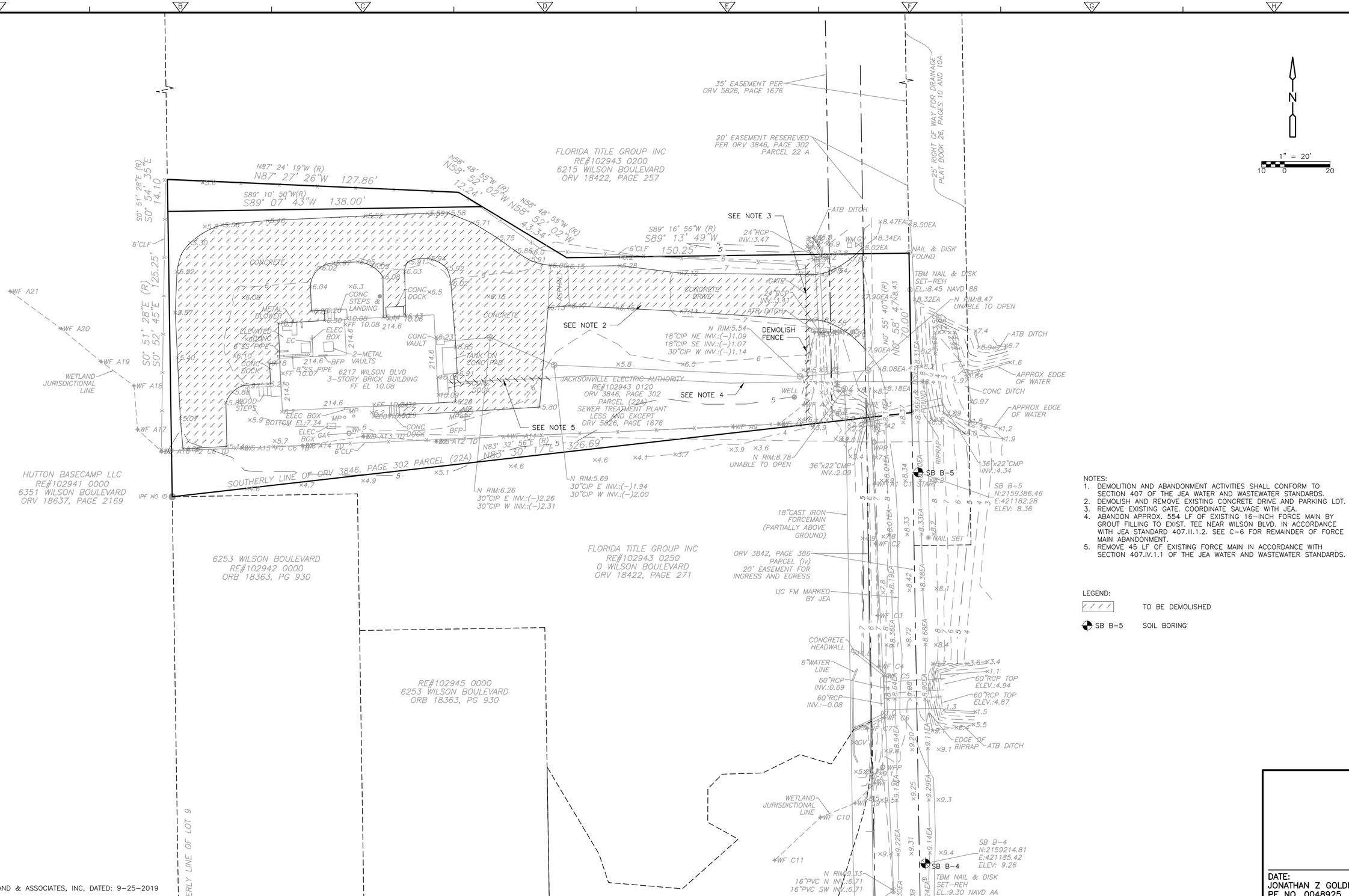


NOTES:
1. DEMOLITION AND ABANDONMENT ACTIVITIES SHALL CONFORM TO SECTION 407 OF THE JEA WATER AND WASTEWATER STANDARDS.
2. DEMOLISH AND REMOVE EXISTING CONCRETE DRIVE AND PARKING LOT.
3. REMOVE EXISTING GATE. COORDINATE SALVAGE WITH JEA.
4. ABANDON APPROX. 554 LF OF EXISTING 16–INCH FORCE MAIN BY GROUT FILLING TO EXIST. TEE NEAR WILSON BLVD. IN ACCORDANCE WITH JEA STANDARD 407.III.1.2. SEE C–6 FOR REMAINDER OF FORCE MAIN ABANDONMENT.
5. REMOVE 45 LF OF EXISTING FORCE MAIN IN ACCORDANCE WITH SECTION 407.IV.1.1 OF THE JEA WATER AND WASTEWATER STANDARDS.

LEGEND:

TO BE DEMOLISHED

SB B–5 SOIL BORING

SURVEY BY: R.E. HOLLAND & ASSOCIATES, INC, DATED: 9–25–2019

| REV. NO. | DATE | DRWN | CHKD | REMARKS |
|---|---|---|---|---|

DESIGNED BY: X
DRAWN BY: A. NUNES
SHEET CHK'D BY: X
CROSS CHK'D BY: X
APPROVED BY: X
DATE: FEBRUARY 2020

CDM Smith
4651 Salisbury Road, Suite 420
Jacksonville, FL 32256
Tel: (904) 731-7109
FL COA No. EB-0000020

JEA

WILSON BLVD. (180-45) AND 118th ST. (180-47)
MASTER PUMP STATION IMPROVEMENTS

WILSON BLVD. MASTER PUMP STATION
TEST HOLE, BORING LOCATIONS AND
DEMOLITION PLAN

DATE:
JONATHAN Z GOLDMAN
PE NO. 0048925

PROJECT NO. 6103–234169
FILE NAME: C003STPL.DWG

SHEET NO.
C-3

60% SUBMITTAL - NOT FOR CONSTRUCTION

XREFs: [CDMS_2436_CEP000SS] Images: []
Last saved by: NUNESAL Time: 2/19/2020 10:01:01 AM
pw:\\cdmsmith-az02-pw.bentley.com:PW_XM1\6103\234169 JEA PDB\04 Design Services NM_60%\02 Civil\10 CADD\C003STPL.dwg
©2020 CDM SMITH ALL RIGHTS RESERVED.
REUSE OF DOCUMENTS: THESE DOCUMENTS AND DESIGNS PROVIDED BY PROFESSIONAL SERVICE, INCORPORATED HEREIN, ARE THE PROPERTY OF CDM SMITH AND ARE NOT TO BE USED, IN WHOLE OR PART, FOR ANY OTHER PROJECT WITHOUT THE WRITTEN AUTHORIZATION OF CDM SMITH.

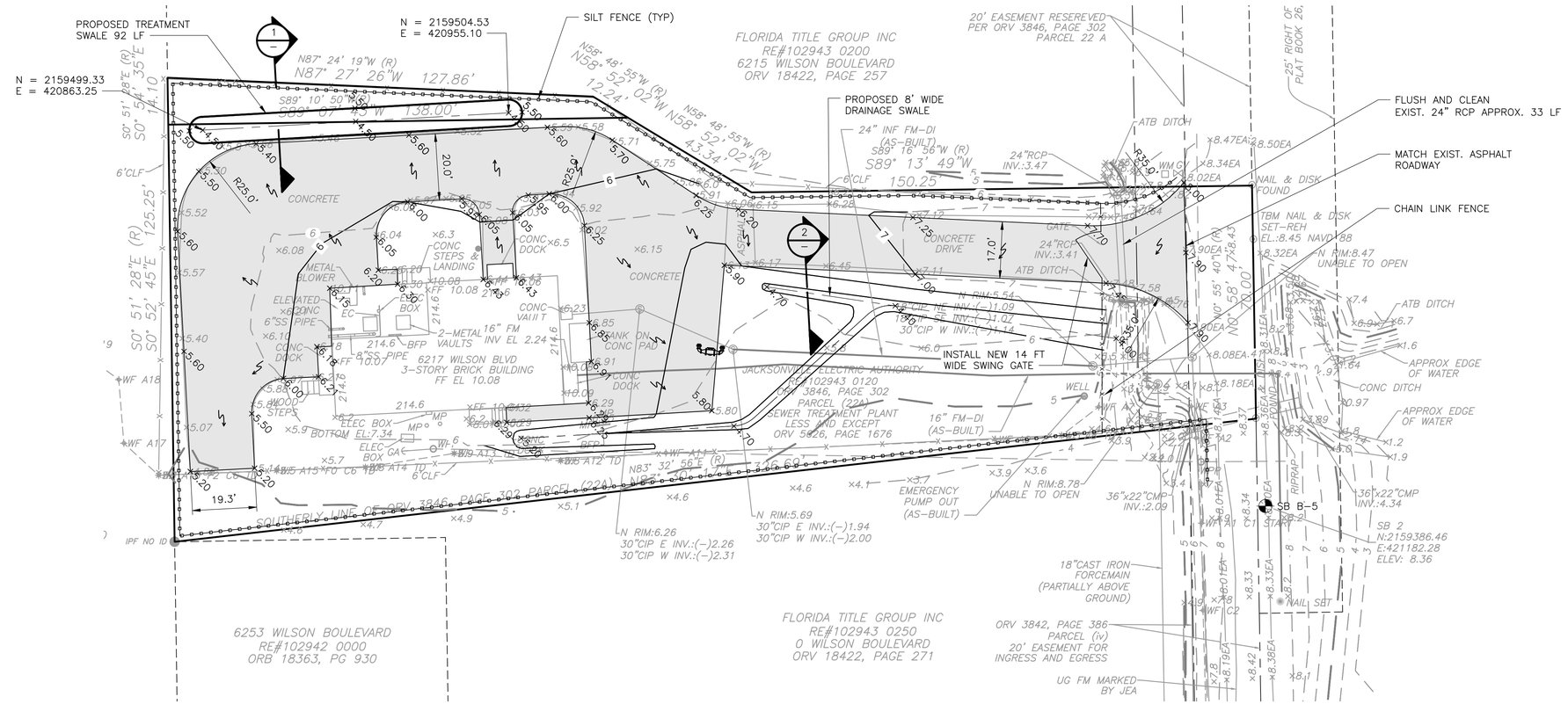
PROPOSED TREATMENT SWALE 92 LF
N = 2159499.33
E = 420863.25
N = 2159504.53
E = 420955.10
SILT FENCE (TYP)
PROPOSED 8' WIDE DRAINAGE SWALE
FLORIDA TITLE GROUP INC
RE#102943 0200
6215 WILSON BOULEVARD
ORV 18422, PAGE 257
20' EASEMENT RESEREVED PER ORV 3846, PAGE 302 PARCEL 22 A
25' RIGHT OF PLAT BOOK 26,
FLUSH AND CLEAN EXIST. 24" RCP APPROX. 33 LF
MATCH EXIST. ASPHALT ROADWAY
CHAIN LINK FENCE
INSTALL NEW 14 FT WIDE SWING GATE
6217 WILSON BLVD
3-STORY BRICK BUILDING
FF EL 10.08
JACKSONVILLE ELECTRIC AUTHORITY
RE#102943 0120
ORV 3846, PAGE 302
PARCEL (22A)
SEWER TREATMENT PLANT
LESS AND EXCEPT
ORV 5826, PAGE 1676
6253 WILSON BOULEVARD
RE#102942 0000
ORB 18363, PG 930
FLORIDA TITLE GROUP INC
RE#102943 0250
0 WILSON BOULEVARD
ORV 18422, PAGE 271
ORV 3842, PAGE 386
PARCEL (iv)
20' EASEMENT FOR
INGRESS AND EGRESS
18"CAST IRON FORCEMAIN (PARTIALLY ABOVE GROUND)
UG FM MARKED BY JEA
SOUTHERLY LINE OF ORV 3846, PAGE 302 PARCEL (22A)
IPF NO ID
SB B-5
SB 2
N:2159386.46
E:421182.28
ELEV: 8.36
TBM NAIL & DISK SET-REH
EL.:8.45 NAVD 88
NAIL & DISK FOUND
NAIL SET
ATB DITCH
CONC DITCH
APPROX EDGE OF WATER
CONCRETE
CONCRETE DRIVE
METAL BLOWER
ELEVATED CONC
6"SS PIPE
8"SS PIPE
CONC DOCK
CONC STEPS & LANDING
WOOD STEPS
ELEC BOX
ELEC GATE BOX
2-METAL VAULTS
16" FM
INV EL 2.24
TANK ON CONC PAD
16" FM-DI (AS-BUILT)
EMERGENCY PUMP OUT (AS-BUILT)
24"RCP INV.:3.47
24"RCP INV.:3.41
24" INF FM-DI (AS-BUILT)
36"x22"CMP INV.:2.09
36"x22"CMP INV.:4.34
RIPRAP
WELL
GATE
N RIM:8.47 UNABLE TO OPEN
N RIM:8.78 UNABLE TO OPEN
N RIM:5.69
30"CIP E INV.:(-)1.94
30"CIP W INV.:(-)2.00
N RIM:6.26
30"CIP E INV.:(-)2.26
30"CIP W INV.:(-)2.31
N RIM:5.54
12"CIP NE INV.:(-)1.09
18"CIP SE INV.:(-)1.02
30"CIP W INV.:(-)1.14
N87° 24' 19"W (R)
N87° 27' 26"W 127.86'
S89° 10' 50"W (R)
S89° 07' 45"W 138.00'
S0° 51' 28"E (R)
S0° 54' 35"E 114.10'
S0° 51' 28"E (R)
S0° 52' 45"E 125.25'
N58° 48' 55"W (R)
N58° 52' 02"W 12.24'
N58° 48' 55"W (R)
N58° 52' 02"W 43.34'
S89° 16' 56"W (R)
S89° 13' 49"W 150.25'
N0° 55' 40"E (R)
N0° 58' 47"E 328.43'
N0° 55' 40"E (R)
N0° 58' 47"E 330.00'
N83° 32' 56"E (R)
N83° 29' 09"E 376.69'
19.3'
20.0'
R25.0'
R25.0'
6'CLF
WF A18
WF A17
WF A15
WF A14
WF A12
WF A11
WF C6
WF C2
WF A2
WS A15
WS A14
WS A12
WS A11
WS C6
WS C2
WS A2
WS A1
WS A0
WS B1
WS B2
WS B3
WS B4
WS B5
WS B6
WS B7
WS B8
WS B9
WS B10
WS B11
WS B12
WS B13
WS B14
WS B15
WS B16
WS B17
WS B18
WS B19
WS B20
WS

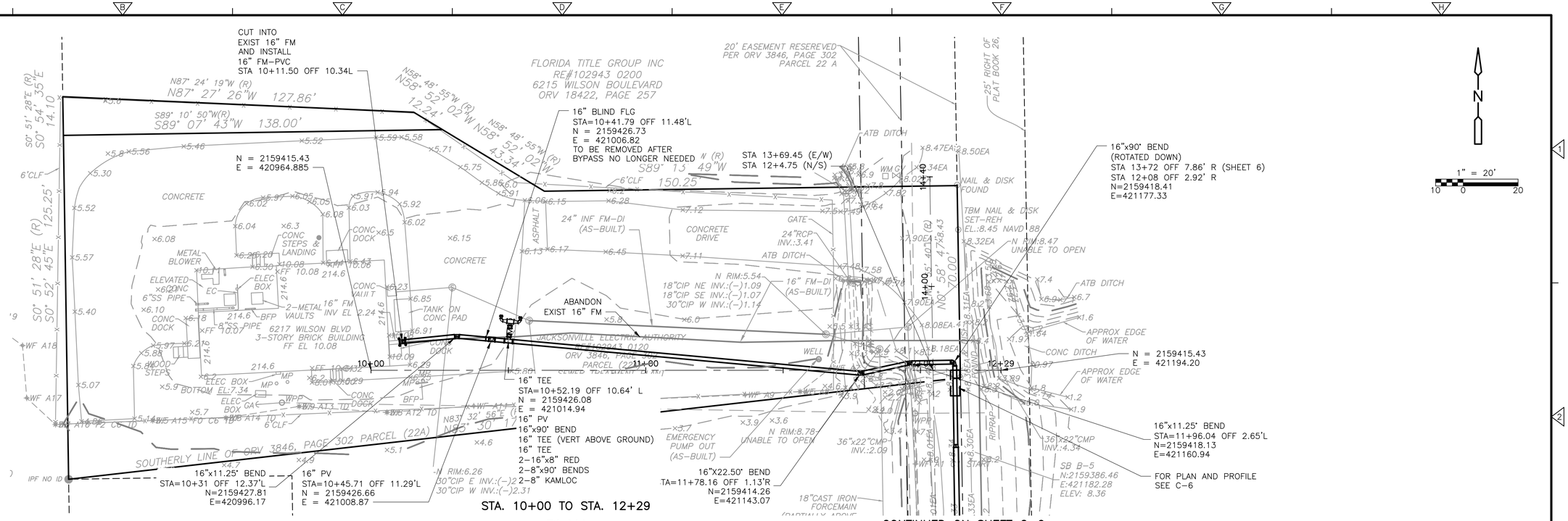


| VALVE SCHEDULE | |
|---|---|
| ID | TYPE |
| PV-101 | 16" GATE VALVE-MJ |
| PV-102 | 16" PLUG VALVE-MJ |
| | |

| PIPE FITTING AND SCHEDULE | |
|---|---|
| ID | TYPE |
| F-101 | 16"x11.25° BEND-DI |
| F-102 | 16" TEE-DI |
| F-103 | 16"x22.5° BEND-DI |
| F-104 | 16"x11.25° BEND-DI |
| F-105 | 16"x90° BEND-DI |
| F-106 | 16"x90° BEND-DI |
| F-107 | 16" TEE-DI (ABOVE GROUND) |
| F-108 | 16" TEE-DI |
| F-109 | 16"x8" RED-DI |
| F-110 | 16"x8" RED-DI |
| F-111 | 8"x90° BEND-DI |
| F-112 | 8"x90° BEND-DI |
| F-113 | 8" KAMLOC |
| F-114 | 8" KAMLOC |
| F-121 | 16" SLEEVE-DI |
| F-122 | 16" MEGALUG |
| F-123 | 16" MEGALUG |

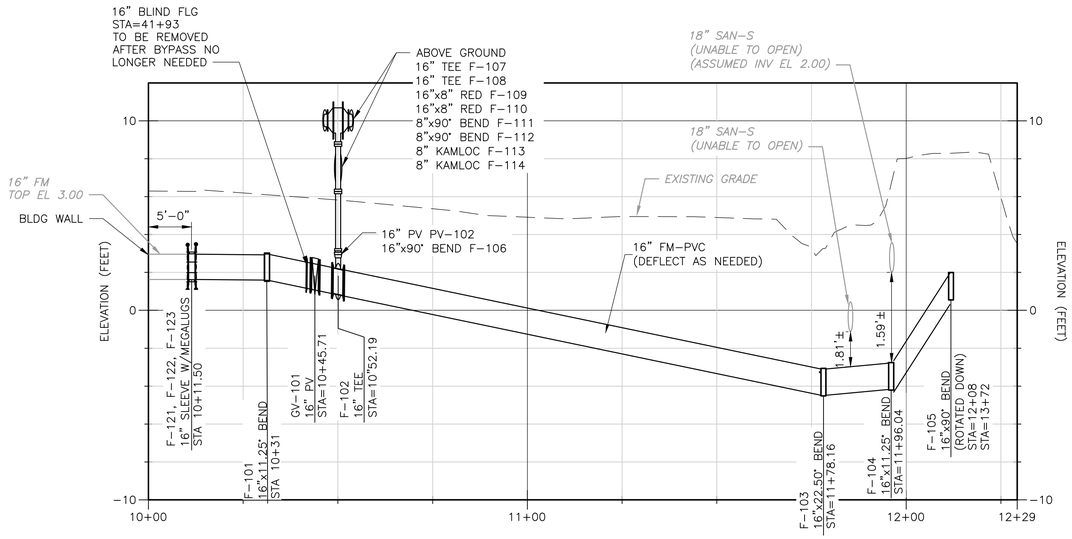


PROFILE

HORIZ: 1" = 20'
VERT: 1" = 4'

NOTES:

1. ALL FORCE MAIN INSTALLED VIA OPEN CUT SHALL BE RESTRAINED JOINT PVC DR18 IN ACCORDANCE WITH SECTION 429.II.1 OF THE JEA WATER AND WASTEWATER STANDARDS.
2. ALL FITTINGS SHALL BE DUCTILE IRON AND IN ACCORDANCE WITH SECTION 429.II.2.1 OF THE JEA WATER AND WASTEWATER STANDARDS.

DATE:
JONATHAN Z GOLDMAN
PE NO. 0048925

| REV. NO. | DATE | DRWN | CHKD | REMARKS |
|---|---|---|---|---|

DESIGNED BY: X
DRAWN BY: A. NUNES
SHEET CHK'D BY: X
CROSS CHK'D BY: X
APPROVED BY: X
DATE: FEBRUARY 2020

CDM Smith
4651 Salisbury Road, Suite 420
Jacksonville, FL 32256
Tel: (904) 731-7109
FL COA No. EB-0000020

JEA

WILSON BLVD. (180-45) AND 118th ST. (180-47)
MASTER PUMP STATION IMPROVEMENTS

WILSON BLVD. MASTER PUMP STATION
PLAN AND PROFILE

PROJECT NO. 6103-234169
FILE NAME: C005STPL.DWG

SHEET NO.
C-5

60% SUBMITTAL - NOT FOR CONSTRUCTION

XREFs: [CWZ005ST_CDMS_2234_CEP000SS] Images: []
Last saved by: NUNESAL Time: 2/19/2020 10:16:23 AM
pw:\\cdmsmith-az02-pw.bentley.com:PW_XM1\6103\234169 JEA PDB\04 Design Services NM_60%\02 Civil\10 CADD\C005STPL.dwg
©2020 CDM SMITH ALL RIGHTS RESERVED.
REUSE OF DOCUMENTS: THESE DOCUMENTS AND DESIGNS PROVIDED BY PROFESSIONAL SERVICE, INCORPORATED HEREIN, ARE THE PROPERTY OF CDM SMITH AND ARE NOT TO BE USED, IN WHOLE OR PART, FOR ANY OTHER PROJECT WITHOUT THE WRITTEN AUTHORIZATION OF CDM SMITH.

FOR CONTINUATION SEE SHEET C-5

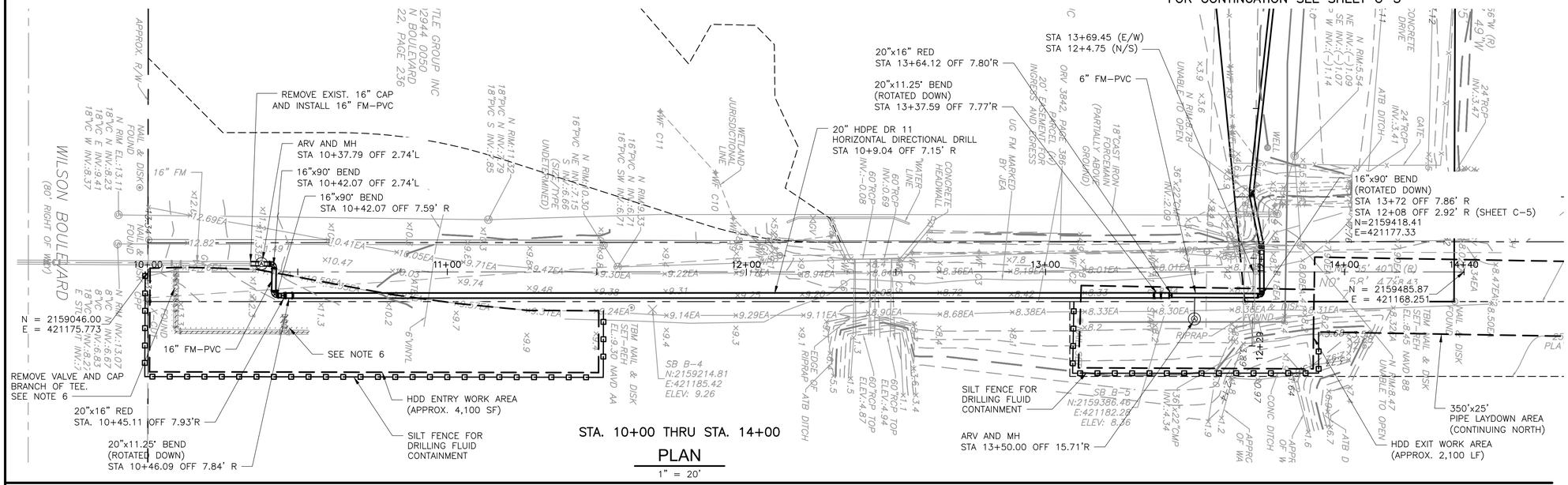


STA. 10+00 THRU STA. 14+00

## PLAN

1" = 20'

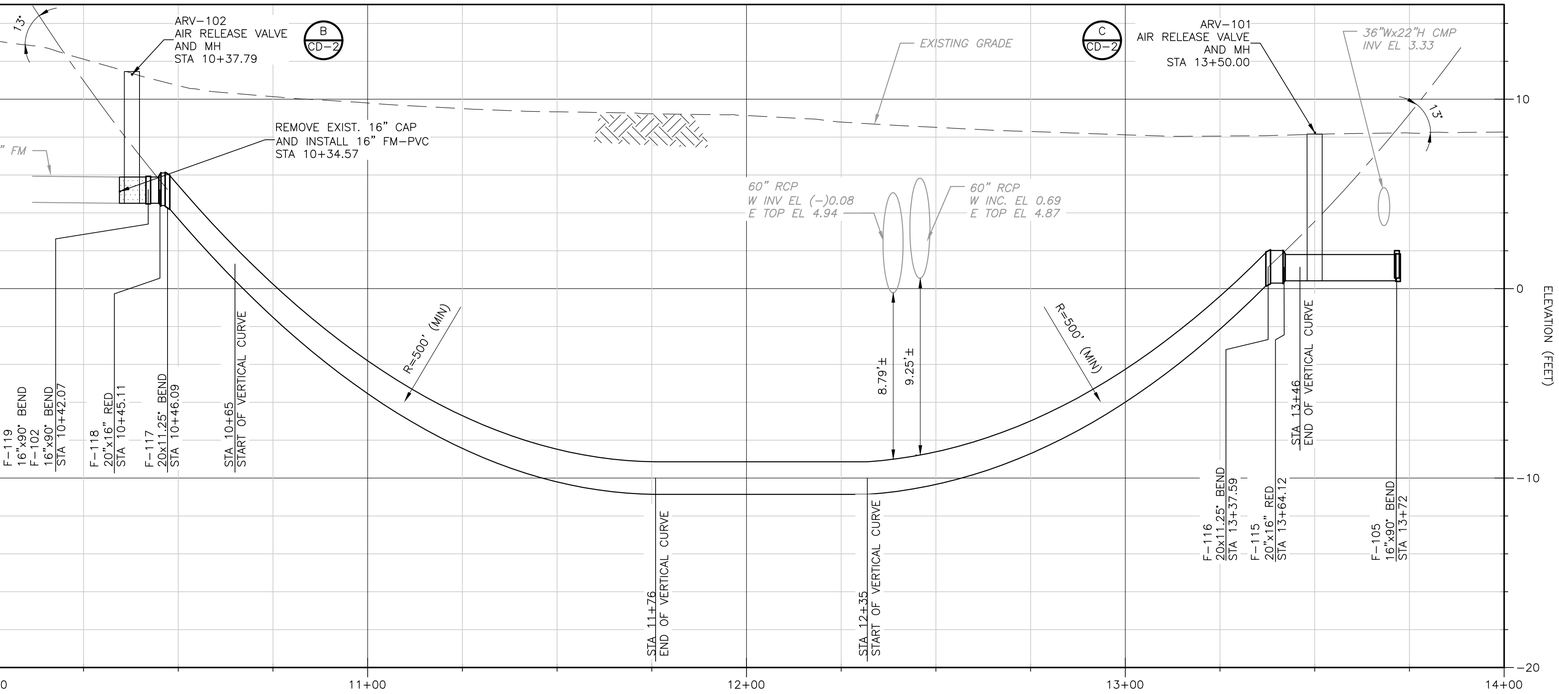


## PROFILE

HORIZ: 1" = 20'
VERT: 1" = 4'

NOTES:

1. 48" MIN. COVER OR 3.5 TIMES REAMER DIAMETER.
2. ALL FORCE MAIN INSTALLED VIA OPEN CUT SHALL BE RESTRAINED JOINT PVC DR18 IN ACCORDANCE WITH SECTION 429.II.1 OF THE JEA WATER AND WASTEWATER STANDARDS.
3. ALL FORCE MAIN INSTALLED VIA HDD SHALL BE HDPE DR11 IN ACCORDANCE WITH SECTION 755.II.1 OF THE JEA WATER AND WASTEWATER STANDARDS.
4. ALL FITTINGS SHALL BE DUCTILE IRON AND IN ACCORDANCE WITH SECTION 429.II.2.1 OF THE JEA WATER AND WASTEWATER STANDARDS.
5. REMOVE EXISTING VALVE. CAP BRANCH OF TEE. ABANDON APPROX. 554 LF OF EXISTING 16-INCH FORCE MAIN BY GROUT FILLING, IN ACCORDANCE WITH SECTION 407.III.1.2 OF THE JEA WATER AND WASTEWATER STANDARDS.
6. COORDINATE WITH JEA FOR SALVAGE AND/OR REUSE OF MATERIALS OR EQUIPMENT.
7. THE CONTRACTOR SHALL REVIEW THE GEOTECHNICAL BORING INFORMATION (SEE THE REPORT OF GEOTECHNICAL EXPLORATION DATED OCTOBER 18, 2019, PREPARED BY MESKEL & ASSOCIATES ENGINEERING) PRIOR TO THE SELECTIONS OF TOOLS/EQUIPMENT FOR DRILLING THE PILOT HOLE AND REAMING.
8. THE CONTRACTOR SHALL BE AWARE THAT A POTENTIAL CONDITION EXISTS FOR A FRAC-OUT IN THE VICINITY OF THE HDD ENTRY AND EXIT, AND THE CONTACTOR SHALL BE RESPONSIBLE FOR CHOOSING MEANS AND METHODS IN ORDER TO AVOID/MITIGATE SUCH AT/OR IN THE VICINITY OF THE HDD ENTRY AND EXIT. THE CONTRACTOR SHALL BE RESPONSIBLE FOR OBTAINING ANY PERMITS REQUIRED BASED UPON THEIR MEANS AND METHODS.
9. THE CONTRACTOR SHALL SUBMIT A PLAN THAT PROVIDES DETAILS ON MEASURES TO BE TAKEN TO MONITOR AND PROTECT ADJACENT UTILITIES, STRUCTURES, ROADWAYS AND SIDEWALKS. INCLUDED IN THIS PLAN SHOULD BE DETAILS ON MONITORING EQUIPMENT AND PROVISIONS, INCLUDING THE LAYOUT OF ALL SETTLE MONITORING AND OTHER MONITORING POINTS, A PRE-CONSTRUCTION SURVEY OF ADJACENT UTILITIES, STRUCTURES, ROADWAYS AND SIDEWALKS, AND PHOTOGRAPHS WITH CAPTIONS TO DOCUMENT PRE-CONSTRUCTION CONDITIONS PRIOR TO COMMENCING HDD OPERATIONS.
10. UTILITY CROSSINGS SHOWN ARE APPROXIMATE; OTHER UTILITIES MAY EXIST THAT ARE NOT SHOWN. THE CONTRACTOR SHALL LOCATE AND PROTECT ALL EXISTING UTILITIES, STRUCTURES AND FACILITIES AND PROVIDE PROPER CLEARANCE BETWEEN UTILITIES, STRUCTURES AND FACILITIES AND THE PIPE.
11. THE CONTRACTOR SHALL BE REQUIRED TO MAINTAIN THE PRODUCT PIPE FULL OF WATER (I.E., BALLASTED) DURING THE ENTIRE PULLBACK PROCESS. THE ABOVE-GRADE PORTION OF THE PIPE WILL BE KEPT EMPTY DURING PULLING.
12. HDD GEOMETRY SHOWN IS THE MINIMUM REQUIREMENTS FOR BASIS OF DESIGN PURPOSES. THE CONTRACTOR MAY ADJUST THE DRILL PATH AND HDD ENTRY AND EXIT POINTS BASED UPON THEIR SPECIFIC EQUIPMENT REQUIREMENTS. SEE THE REQUIREMENTS OF SECTION 02413 FOR SPECIFIED TOLERANCES AND REQUIREMENTS FOR THE HDD WORK PLAN AND CALCULATIONS FOR REVIEW.
13. DRILLED PATH STATIONING IS MEASURED IN FEET BY PLAN LENGTHS. THE CONTRACTOR MUST TAKE INTO ACCOUNT VERTICAL PIPE RUNS AND BENDING RADII WHEN CALCULATING PIPE QUANTITIES.
14. ELEVATIONS SHOWN ARE IN FEET AND REFERENCED TO THE NORTH AMERICAN VERTICAL DATUM OF 1988 (NAVD 88) DATUM.

| VALVE SCHEDULE | |
|---|---|
| ID | TYPE |
| ARV-101 | ARV |
| ARV-102 | ARV |
| | |

| PIPE FITTING AND SCHEDULE | |
|---|---|
| ID | TYPE |
| F-105 | 16"x90° BEND-DI |
| F-115 | 20"x16" RED-DI |
| F-116 | 20"x11.25° BEND-DI |
| F-117 | 20"x11.25° BEND-SI |
| F-118 | 20"x16" RED-DI |
| F-119 | 16"x90° BEND-DI |
| F-120 | 16"x90° BEND-DI |

DATE:
JONATHAN Z GOLDMAN
PE NO. PE 0048925

| REV. NO. | DATE | DRWN | CHKD | REMARKS |
|---|---|---|---|---|

DESIGNED BY: X
DRAWN BY: A. NUNES
SHEET CHK'D BY: X
CROSS CHK'D BY: X
APPROVED BY: X
DATE: FEBRUARY 2020

CDM Smith
4651 Salisbury Road, Suite 420
Jacksonville, FL 32256
Tel: (904) 731-7109
FL COA No. EB-0000020

JEA

WILSON BLVD. (180-45) AND 118th ST. (180-47)
MASTER PUMP STATION IMPROVEMENTS

WILSON BLVD. MASTER PUMP STATION
PLAN AND PROFILE

PROJECT NO. 6103-234169
FILE NAME: C006STPL.DWG

SHEET NO.
C-6

60% SUBMITTAL - NOT FOR CONSTRUCTION

XREFs: [CWZ000ST, CDMS_2234, CEP000SS] Images: []
Last saved by: NUNESAL Time: 2/19/2020 10:25:08 AM
pw:\\cdmsmith-azc2-pw.bentley.com:PW_XM1\6103\234169 JEA PDB\04 Design Services NML_60%\02 Civil\10 CADD\C006STPL.dwg
©2020 CDM SMITH ALL RIGHTS RESERVED.
REUSE OF DOCUMENTS: THESE DOCUMENTS AND DESIGNS PROVIDED BY PROFESSIONAL SERVICE, INCORPORATED HEREIN, ARE THE PROPERTY OF CDM SMITH AND ARE NOT TO BE USED, IN WHOLE OR PART, FOR ANY OTHER PROJECT WITHOUT THE WRITTEN AUTHORIZATION OF CDM SMITH.

BYPASS NOTES:

1. INSTALL DOGHOUSE MH ON 54–INCH INFLUENT SANITARY SEWER AND MODIFY 54–INCH SAN S AS DETAILED ON THE DRAWINGS TO ACCEPT BYPASS PUMP SUCTION PIPING AS DETAILED ON THE DRAWINGS.
2. MOBILIZE THE BYPASS PUMPING SYSTEM AND INSTALL TEMPORARY SUCTION AND DISCHARGE PIPING AND INSTALL THE BYPASS SYSTEM DISCHARGE CONNECTION TO THE EXISTING 18–INCH FM (LINE UNDER PRESSURE). THE 18–INCH VALVE TO 42–INCH TRANSMISSION PIPELINE SHOULD BE OPENED.
3. PROVIDE SUITABLE PROTECTION FOR ANY PIPING CROSSING DRIVEWAY AND/OR PARKING AREAS. CONTRACTOR TO DETERMINE FINAL LOCATION AND LAYOUT OF BYPASS PUMPS AND ROUTE FOR SUCTION AND DISCHARGE PIPING ON PUMP STATION SITE.
4. 118TH STREET PS TO REMAIN IN OPERATION UNTIL ALL LINESTOPS, BYPASS PIPING, VALVES CONTROLS AND PUMPING SYSTEMS ARE INSTALLED AND TESTED READY FOR SERVICE.
5. AT LOW FLOW CONDITIONS, TEMPORARILY STOP THE FLOW IN THE SANITARY SEWER MH UPSTREAM OF THE STATION, IMMEDIATELY INSERT THE LINESTOP/PLUG IN THE 54–INCH SEWER DOWNSTREAM OF THE NEW RECTANGULAR MH FOR LONG TERM INSTALLATION AND RELEASE THE FLOW AT THE UPSTREAM MH.
6. BEGIN BYPASS PUMPING OPERATIONS. UPSTREAM PUMP STATIONS DISCHARGING TO THIS STATION WILL REMAIN IN OPERATION.
7. UPON COMPLETION OF PUMP CONSTRUCTION, VERIFY THE NEW STATION DISCHARGE GV IS OPEN, REMOVE LINESTOP/PLUG IN STATION INFLUENT SEWER FROM SPLITTER BOX(AND KEEP READY FOR RE–INSERTION SHOULD STATION OPERATION FAIL) TO RESTORE FLOW TO STATION WETWELL. PLACE 118TH STREET PS PUMPS INTO OPERATION FOR OPERATIONAL TEST.
8. REMOVE BYPASS PUMPS AND TEMPORARY PIPING AFTER ACCEPTANCE AND RESTORE AREA TO SPECIFIED CONDITIONS.
9. MODIFY EXISTING DIESEL PUMP PIPING TO NEW RECTANGULAR MH, SEE DRAWINGS.

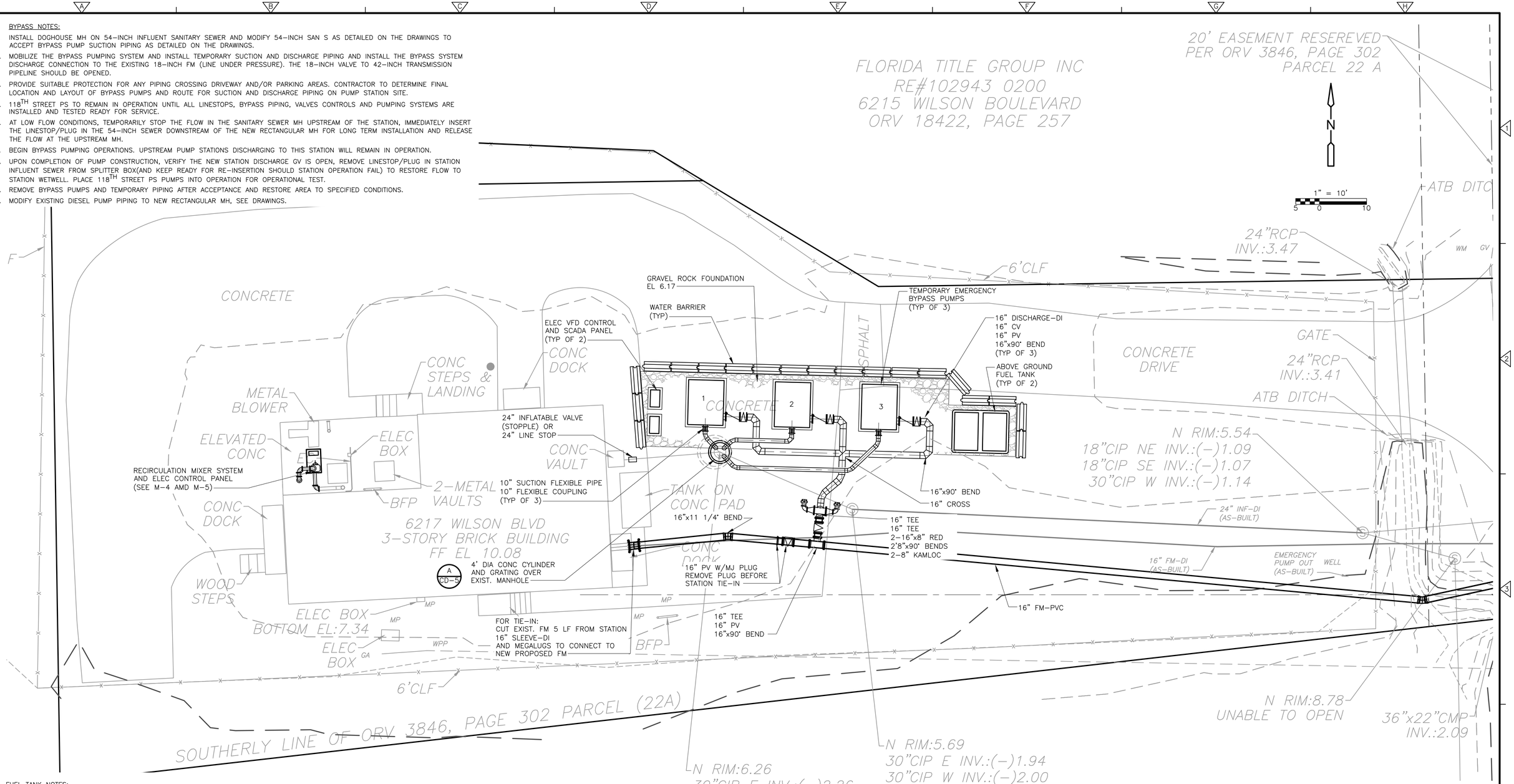


FUEL TANK NOTES:

1. JEA ENVIRONMENTAL SERVICES IS RESPONSIBLE FOR NOTIFICATIONS AND ASSOCIATED REPORTING REGARDING THE INSTALLATION, REMOVAL, AND RELOCATION OF FUEL TANKS THAT ARE GREATER THAN 550 GALLONS. CONTRACTOR TO CONTACT ENVIRONMENTAL SERVICES (DAVID NORSE AT 665–5501 OR MATT MCCLURE AT 665–6253 IF DAVID CANNOT BE REACHED) IF ANY OF THE FOLLOWING TANK ACTIVITIES ARE PLANNED SO THAT THE PROPER IDENTIFIED NOTIFICATIONS CAN BE ACCOMPLISHED.
2. NOTIFICATION IS REQUIRED TO BE MADE TO THE REGULATORY AGENCIES BEFORE A TANK IS TO BE INSTALLED.
3. TANK REMOVAL: A 30 DAY NOTIFICATION AND A 48 HR NOTIFICATION IF A TANK IS TO BE REMOVED OFF–SITE FROM ANY JEA PROPERTY, A 10 DAY AND A 48 HOUR NOTIFICATION IS REQUIRED TO BE MADE TO THE REGULATORY AGENCIES.
4. TANK RELOCATION (PERMANENT): FROM ONE JEA SITE TO ANOTHER JEA SITE, A 10 DAY AND A 48 HOUR NOTIFICATION IS REQUIRED TO BE MADE TO THE REGULATORY AGENCIES PRIOR TO REMOVAL FROM THE CURRENT LOCATION. ADDITIONALLY, A 30 DAY AND 48 HOUR NOTIFICATION IS REQUIRED TO BE MADE TO THE REGULATORY AGENCIES BEFORE THE PLANNED FACILITY IS TO RECEIVE THE TANK.
5. CONSTRUCT BOLLARDS AROUND FUEL TANKS WITH 3' SEPARATION. ALL ABOVE GROUND FUEL PIPING SHALL BE 316SS (SCH 40).
6. TANK RELOCATION (TEMPORARY): TANK IS TEMPORARILY MOVED BECAUSE OF A REHAB PROJECT, OR SIMILAR, A 10 DAY AND A 48 HOUR NOTIFICATION IS REQUIRED TO BE MADE TO THE REGULATORY AGENCIES PRIOR TO REMOVAL. ADDITIONALLY, A 30 DAY AND 48 HOUR NOTIFICATION IS REQUIRED TO BE MADE TO THE REGULATORY AGENCIES BEFORE THE TANK IS MOVED BACK IN PLACE.

| REV. NO. | DATE | DRWN | CHKD | REMARKS |
|---|---|---|---|---|

DESIGNED BY: X
DRAWN BY: A. NUNES
SHEET CHK'D BY: X
CROSS CHK'D BY: X
APPROVED BY: X
DATE: FEBRUARY 2020

CDM Smith
4651 Salisbury Road, Suite 420
Jacksonville, FL 32256
Tel: (904) 731-7109
FL COA No. EB-0000020

JEA

WILSON BLVD. (180-45) AND 118th ST. (180-47)
MASTER PUMP STATION IMPROVEMENTS

WILSON BLVD. MASTER PUMP STATION
BYPASS PLAN

DATE:
JONATHAN Z GOLDMAN
PE NO. 0048925

PROJECT NO. 6103–234169
FILE NAME: C007STPL.DWG

SHEET NO.
C-7

60% SUBMITTAL - NOT FOR CONSTRUCTION

XREFs: [CDMS_2436_CEP000SS_CWZ004ST_CWZ000ST_MWP000MW] Images: []
Last saved by: NUNESAL Time: 2/20/2020 12:07:11 PM
pw:\\cdmsmith-azo2-pw.bentley.com:PW_XM1\6103\234169 JEA PDB\04 Design Services NM_60X\02 Civil\10 CADD\C007STPL.dwg
© 2020 CDM SMITH ALL RIGHTS RESERVED.
REUSE OF DOCUMENTS: THESE DOCUMENTS AND DESIGNS PROVIDED BY PROFESSIONAL SERVICE, INCORPORATED HEREIN, ARE THE PROPERTY OF CDM SMITH AND ARE NOT TO BE USED, IN WHOLE OR PART, FOR ANY OTHER PROJECT WITHOUT THE WRITTEN AUTHORIZATION OF CDM SMITH.

# MAP SHOWING A LIMITED TOPOGRAPHICAL SURVEY OF

A PORTION OF BLOCK 39, AS SHOWN ON THE PLAT OF ORTEGA FARMS, AS RECORDED IN PLAT BOOK 3, PAGE 79 OF THE CURRENT PUBLIC RECORDS OF DUVAL COUNTY, FLORIDA, LYING IN SECTION 20, TOWNSHIP 3 SOUTH, RANGE 26 EAST, DUVAL COUNTY, FLORIDA

PREPARED FOR:
CDM SMITH

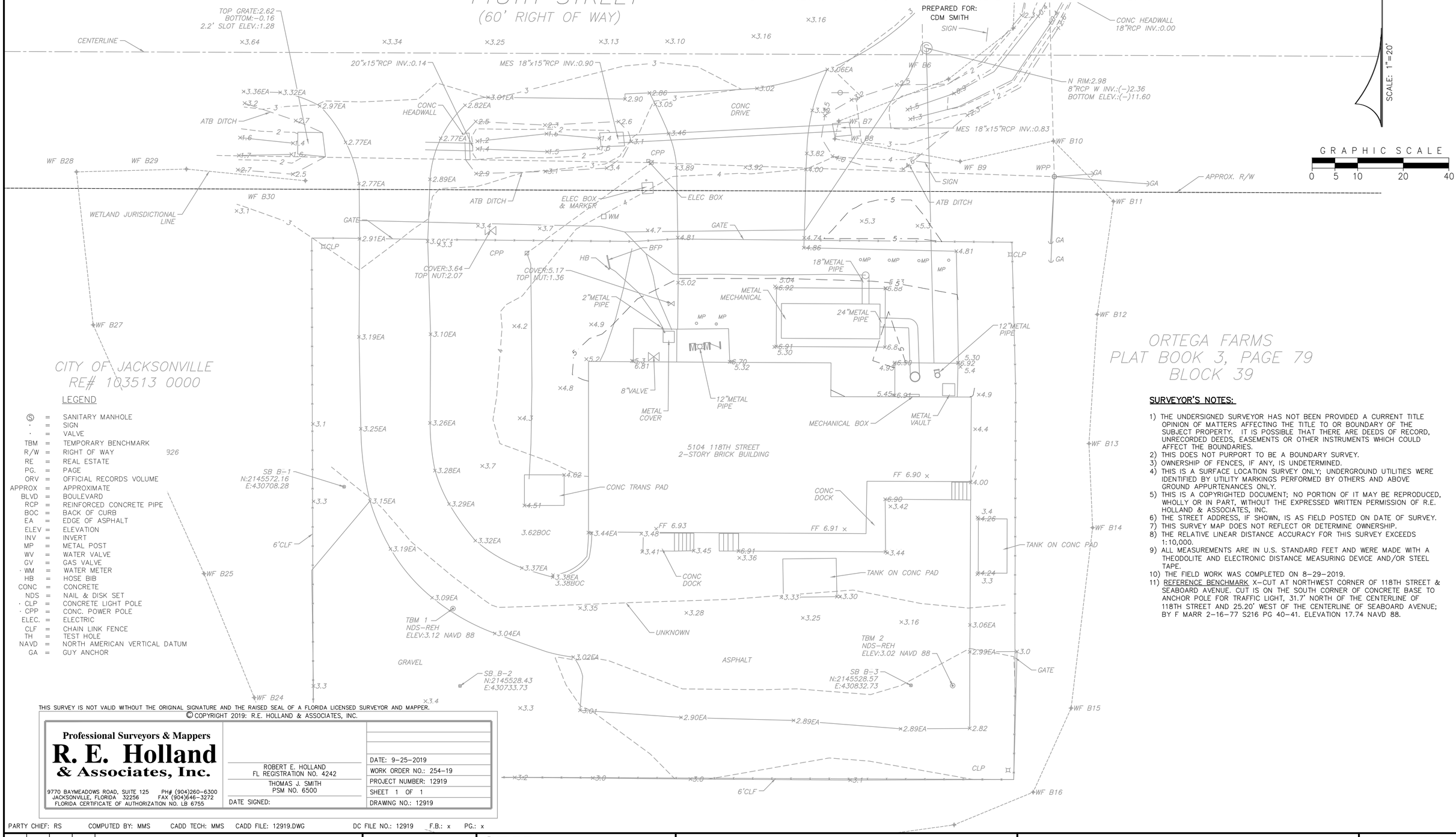


SCALE: 1"=20'

GRAPHIC SCALE
0 5 10 20 40

## LEGEND

| | | |
|---|---|---|
| Ⓢ | = | SANITARY MANHOLE |
| · | = | SIGN |
| · | = | VALVE |
| TBM | = | TEMPORARY BENCHMARK |
| R/W | = | RIGHT OF WAY |
| RE | = | REAL ESTATE |
| PG. | = | PAGE |
| ORV | = | OFFICIAL RECORDS VOLUME |
| APPROX | = | APPROXIMATE |
| BLVD | = | BOULEVARD |
| RCP | = | REINFORCED CONCRETE PIPE |
| BOC | = | BACK OF CURB |
| EA | = | EDGE OF ASPHALT |
| ELEV | = | ELEVATION |
| INV | = | INVERT |
| MP | = | METAL POST |
| WV | = | WATER VALVE |
| GV | = | GAS VALVE |
| · WM | = | WATER METER |
| HB | = | HOSE BIB |
| CONC | = | CONCRETE |
| NDS | = | NAIL & DISK SET |
| · CLP | = | CONCRETE LIGHT POLE |
| · CPP | = | CONC. POWER POLE |
| ELEC. | = | ELECTRIC |
| CLF | = | CHAIN LINK FENCE |
| TH | = | TEST HOLE |
| NAVD | = | NORTH AMERICAN VERTICAL DATUM |
| GA | = | GUY ANCHOR |

326

## SURVEYOR'S NOTES:

1) THE UNDERSIGNED SURVEYOR HAS NOT BEEN PROVIDED A CURRENT TITLE OPINION OF MATTERS AFFECTING THE TITLE TO OR BOUNDARY OF THE SUBJECT PROPERTY. IT IS POSSIBLE THAT THERE ARE DEEDS OF RECORD, UNRECORDED DEEDS, EASEMENTS OR OTHER INSTRUMENTS WHICH COULD AFFECT THE BOUNDARIES.
2) THIS DOES NOT PURPORT TO BE A BOUNDARY SURVEY.
3) OWNERSHIP OF FENCES, IF ANY, IS UNDETERMINED.
4) THIS IS A SURFACE LOCATION SURVEY ONLY; UNDERGROUND UTILITIES WERE IDENTIFIED BY UTILITY MARKINGS PERFORMED BY OTHERS AND ABOVE GROUND APPURTENANCES ONLY.
5) THIS IS A COPYRIGHTED DOCUMENT; NO PORTION OF IT MAY BE REPRODUCED, WHOLLY OR IN PART, WITHOUT THE EXPRESSED WRITTEN PERMISSION OF R.E. HOLLAND & ASSOCIATES, INC.
6) THE STREET ADDRESS, IF SHOWN, IS AS FIELD POSTED ON DATE OF SURVEY.
7) THIS SURVEY MAP DOES NOT REFLECT OR DETERMINE OWNERSHIP.
8) THE RELATIVE LINEAR DISTANCE ACCURACY FOR THIS SURVEY EXCEEDS 1:10,000.
9) ALL MEASUREMENTS ARE IN U.S. STANDARD FEET AND WERE MADE WITH A THEODOLITE AND ELECTRONIC DISTANCE MEASURING DEVICE AND/OR STEEL TAPE.
10) THE FIELD WORK WAS COMPLETED ON 8-29-2019.
11) REFERENCE BENCHMARK X-CUT AT NORTHWEST CORNER OF 118TH STREET & SEABOARD AVENUE. CUT IS ON THE SOUTH CORNER OF CONCRETE BASE TO ANCHOR POLE FOR TRAFFIC LIGHT, 31.7' NORTH OF THE CENTERLINE OF 118TH STREET AND 25.20' WEST OF THE CENTERLINE OF SEABOARD AVENUE; BY F MARR 2-16-77 S216 PG 40-41. ELEVATION 17.74 NAVD 88.

THIS SURVEY IS NOT VALID WITHOUT THE ORIGINAL SIGNATURE AND THE RAISED SEAL OF A FLORIDA LICENSED SURVEYOR AND MAPPER.

© COPYRIGHT 2019: R.E. HOLLAND & ASSOCIATES, INC.


Professional Surveyors & Mappers
**R. E. Holland & Associates, Inc.**
9770 BAYMEADOWS ROAD, SUITE 125 PH# (904)260-6300
JACKSONVILLE, FLORIDA 32256 FAX (904)646-3272
FLORIDA CERTIFICATE OF AUTHORIZATION NO. LB 6755

ROBERT E. HOLLAND
FL REGISTRATION NO. 4242
THOMAS J. SMITH
PSM NO. 6500
DATE SIGNED:


DATE: 9-25-2019
WORK ORDER NO.: 254-19
PROJECT NUMBER: 12919
SHEET 1 OF 1
DRAWING NO.: 12919

PARTY CHIEF: RS COMPUTED BY: MMS CADD TECH: MMS CADD FILE: 12919.DWG DC FILE NO.: 12919 F.B.: x PG.: x

| REV. NO. | DATE | DRWN | CHKD | REMARKS |
|---|---|---|---|---|

DESIGNED BY: X
DRAWN BY: A. NUNES
SHEET CHK'D BY: X
CROSS CHK'D BY: X
APPROVED BY: X
DATE: JANUARY 2020


CDM Smith
4651 Salisbury Road, Suite 420
Jacksonville, FL 32256
Tel: (904) 731-7109
FL COA No. EB-0000020


JEA

WILSON BLVD. (180-45) AND 118th ST. (180-47)
MASTER PUMP STATION IMPROVEMENTS

118 STREET MASTER PUMP STATION
SURVEY

PROJECT NO. 6103-234169
FILE NAME: C008STPL.DWG
SHEET NO.
C-8

60% SUBMITTAL - NOT FOR CONSTRUCTION


XREFs: [CEP001SS, CDMS_2234] Images: []
Last saved by: NUNESAL Time: 1/28/2020 10:01:33 AM
pw:\\pw.cdmsmith.com:PW_XM1\6103\234169 JEA PDB\04 Design Services NM_60%\02 Civil\10 CADD\C008STPL.dwg
© 2020 CDM SMITH ALL RIGHTS RESERVED.
REUSE OF DOCUMENTS: THESE DOCUMENTS AND DESIGNS PROVIDED BY PROFESSIONAL SERVICE, INCORPORATED HEREIN, ARE THE PROPERTY OF CDM SMITH AND ARE NOT TO BE USED, IN WHOLE OR PART, FOR ANY OTHER PROJECT WITHOUT THE WRITTEN AUTHORIZATION OF CDM SMITH.

THE PROPERTY OF CDM SMITH AND ARE NOT TO BE USED, IN WHOLE OR PART, FOR ANY OTHER PROJECT WITHOUT THE WRITTEN AUTHORIZATION OF CDM SMITH.

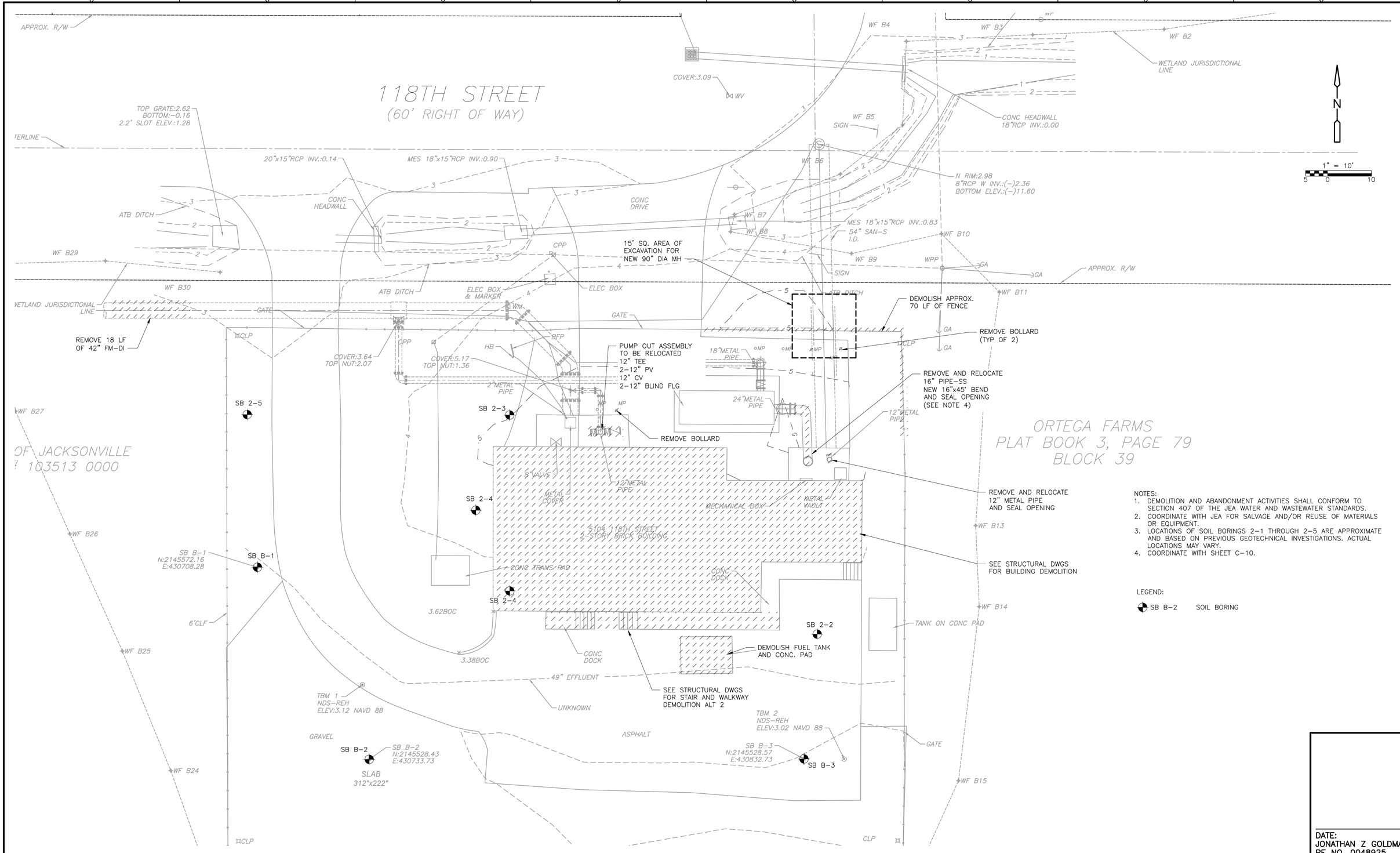


NOTES:
1. DEMOLITION AND ABANDONMENT ACTIVITIES SHALL CONFORM TO SECTION 407 OF THE JEA WATER AND WASTEWATER STANDARDS.
2. COORDINATE WITH JEA FOR SALVAGE AND/OR REUSE OF MATERIALS OR EQUIPMENT.
3. LOCATIONS OF SOIL BORINGS 2-1 THROUGH 2-5 ARE APPROXIMATE AND BASED ON PREVIOUS GEOTECHNICAL INVESTIGATIONS. ACTUAL LOCATIONS MAY VARY.
4. COORDINATE WITH SHEET C-10.

LEGEND:

SB B-2 SOIL BORING

DATE:
JONATHAN Z GOLDMAN
PE NO. 0048925

| REV. NO. | DATE | DRWN | CHKD | REMARKS |
|---|---|---|---|---|

DESIGNED BY: X
DRAWN BY: A. NUNES
SHEET CHK'D BY: X
CROSS CHK'D BY: X
APPROVED BY: X
DATE: FEBRUARY 2020

CDM Smith
4651 Salisbury Road, Suite 420
Jacksonville, FL 32256
Tel: (904) 731-7109
FL COA No. EB-0000020

JEA

WILSON BLVD. (180-45) AND 118th ST. (180-47)
MASTER PUMP STATION IMPROVEMENTS

118 STREET MASTER PUMP STATION
TEST HOLE, BORING LOCATIONS AND DEMOLITION PLAN

PROJECT NO. 6103-234169
FILE NAME: C009STPL.DWG

SHEET NO.
C-9

60% SUBMITTAL - NOT FOR CONSTRUCTION

XREFs: [CEP001SS, CDMS_2234, CWZ003ST] Images: []
Last saved by: NUNESAL Time: 2/20/2020 8:44:26 AM
pw:\\cdmsmith-az02-pw.bentley.com:PW_XM1\6103\234169 JEA PDB\04 Design Services NM_60%\02 Civil\10 CADD\C009STPL.dwg
©2020 CDM SMITH ALL RIGHTS RESERVED
REUSE OF DOCUMENTS: THESE DOCUMENTS AND DESIGNS PROVIDED BY PROFESSIONAL SERVICE, INCORPORATED HEREIN, ARE THE PROPERTY OF CDM SMITH.

XREFs: [CDMS_2234_CEP001SS, CWZ003ST, ANZ001PS, MWP003PS, HWZ001PS – Floor Plan – 01 HVAC PLAN_EXP, EWZ002PS] Images: []
Last saved by: NUNESAL Time: 2/20/2020 3:20:07 PM
pw:\\cdmsmith-a202-pw.bentley.com:PW_XM1\61033\234169 JEA PDB\04 Design Services NM_60%\02 Civil\10 CADD\C010STPL.dwg
©2020 CDM SMITH ALL RIGHTS RESERVED.
REUSE OF DOCUMENTS: THESE DOCUMENTS AND DESIGNS PROVIDED BY PROFESSIONAL SERVICE, INCORPORATED HEREIN, ARE THE PROPERTY OF CDM SMITH AND ARE NOT TO BE USED, IN WHOLE OR PART, FOR ANY OTHER PROJECT WITHOUT THE WRITTEN AUTHORIZATION OF CDM SMITH.

# 118TH STREET
## (60' RIGHT OF WAY)

CENTERLINE

TOP GRATE:2.62
BOTTOM:–0.16
2.2' SLOT ELEV.:1.28

20"x15"RCP INV.:0.14

MES 18"x15"RCP INV.:0.90

CONC HEADWALL

ATB DITCH

CONC DRIVE

CONC HEADWALL
18"RCP INV.:0.00

WF B5

SIGN

WF B6

N RIM:2.98
8"RCP W INV.:(–)2.36
BOTTOM ELEV.:(–)11.60

WF B7

WF B8

MES 18"x15"RCP INV.:0.83

WF B10

PRECAST DECORATIVE SCREEN WALL AND FOOTER (SEE ARCH DWGS)

WF B28

WF B29

CPP

12"x90° BEND–DI PUMP OUT CONNECTON W/BLIND FLG.

WF B9

WPP

GA

GA

APPROX. R/W

WF B30

42" FM

ATB DITCH

ELEC BOX & MARKER

ELEC BOX

INSTALL 24" PIPE–DI SUCTION FROM EXIST. DIESEL PUMP

42" LINE STOP

ATB DITCH

54" INF–GRAVITY SEWER

WF B11

WETLAND JURISDICTIONAL LINE

WM

CLP

GA

B CD–3

CUT INTO EXIST. 42" FM AND INSTALL VALVE BOX FOR STRAP ON FLOW METER (ALTERNATE)

COVER:3.64
TOP NUT:2.07

CPP

HB

COVER:5.17
TOP NUT:1.36

42"x12" TAP

18" DISCHARGE

MP

MP

CLP

DOGHOUSE MANHOLE

D CD–5

BOLLARD

SEAL 24" OPENING (SEE STRUCTURAL DWGS)

2"METAL PIPE

18" DISCHARGE

WM

WP

24" METAL PIPE

DIESEL PUMP

WF B12

WF B27

12"x90' BEND
REPOSITION EXIST.
12" TEE
2–12" PV
12" CV
2–12" BLIND FLG

UE

LANDING AND STAIRS

SEAL 12" OPENING (SEE STRUCTURAL DWGS)

CITY OF JACKSONVILLE
RE# 103513 0000

ORTEGA FARMS
PLAT BOOK 3, PAGE 79
BLOCK 39

PICKUP TRUCK TURING RADIUS FOR MOTOR REMOVAL

MONORAIL PEDESTAL (TYP)

ELEC CONDUITS (SEE ELEC DWGS)

PRECAST ELECTRICAL ROOM ON SLAB

(SEE HVAC DWGS)

SEE M–9 FOR PIPING

WF B13

EXIST. TRANSFORMER

SB B–1
N:2145572.16
E:430708.28

1" PW–PVC CONNECT TO EXIST. PW

RECIRCULATION AND CONTROL PANEL (SEE ELEC DWGS)

ELEC PANEL (SEE ELEC DWGS)

(SEE HVAC DWGS)

(SEE HVAC DWGS)

WF B14

TANK ON CONC PAD

6'CLF

WF B25

TROLLY

3.38BOC

MONORAIL

STAIRS AND LOADING PLATFORM (SEE ARCH DWGS)

48" EFFLUENT

ELEC CONDUITS (SEE ELEC DWGS)

ELEC CONDUITS (SEE ELEC DWGS)

E CD–4

BOLLARD (TYP OF 13)

TBM 1
NDS–REH
ELEV:3.12 NAVD 88

UNKNOWN

TBM 2
NDS–REH
ELEV:3.02 NAVD 88

D CD–2

GENERATOR WITH INTEGRATED FUEL TANK

GRAVEL

SB B–2
N:2145533.43
E:431033.73

ASPHALT

SB B–3
N:2145528.57
E:430832.73

GATE

WF B24

SLAB
3'2"x22'0"

WF B15

MATCH EXIST. ASPHALT ROADWAY

CLP

CLP

6'CLF

WF B23

WF B16

WF B22

WF B17

WF B21

WF B18

WF B19

1" = 10'
5 0 10

LEGEND:
- 5 — EXISTING CONTOUR
- 7 — PROPOSED CONTOUR
- SILT FENCE
- NEW PAVEMENT

NOTES:
1. CONTRACTOR TO ADD BLACK VINYL PRIVACY SLATS TO ALL EXISTING FENCING IN ACCORDANCE WITH JEA STANDARD 492.1.1.4.
2. NEW PAVEMENT SHALL BE TYPE S–1 ASPHALTIC CONCRETE ON 12–INCHES CRUSHED LIMESTONE BASE, PER DETAIL H ON SHEET CD–3.
3. EXISTING PAVEMENT IS TO REMAIN. CONTRACTOR IS RESPONSIBLE FOR PRE–CONSTRUCTION VIDEOS TO DOCUMENT THE CONDITION OF THE EXISTING PAVEMENT. CONTRACTOR RESPONSIBLE FOR REPAIRING PAVEMENT DAMAGED DURING CONSTRUCTION WITH PAVEMENT SECTION MATCHING EXISTING.
4. BOLLARDS SHALL BE IN ACCORDANCE WITH JEA FACILITIES STANDARD 34 71 13 – BOLLARD VEHICLE BARRIER.
5. ALL GRASS AREAS DISTURBED BY CONTRACTOR SHALL RECEIVE GRASS RESTORATION IN ACCORDANCE WITH SECTION 441 OF THE JEA WATER AND WASTEWATER STANDARDS.
6. RECIRCULATION AND CONTROL PANEL ENCLOSURE SHALL BE PROVIDED BY ODOR CONTROL SYSTEM MANUFACTURER. ENCLOSURE SHALL INCLUDE NUTRIENT TANK, RECIRCULATION PUMP, BLOWER VFD PANEL, NUTRIENT TIMER PANEL, AND ASSOCIATED PIPING AND VALVES.

| REV. NO. | DATE | DRWN | CHKD | REMARKS |
|---|---|---|---|---|
| | | | | |

DESIGNED BY: X
DRAWN BY: A. NUNES
SHEET CHK'D BY: X
CROSS CHK'D BY: X
APPROVED BY: X
DATE: FEBRUARY 2020

CDM Smith
4651 Salisbury Road, Suite 420
Jacksonville, FL 32256
Tel: (904) 731-7109
FL COA No. EB-0000020

JEA

WILSON BLVD. (180-45) AND 118th ST. (180-47)
MASTER PUMP STATION IMPROVEMENTS

118 STREET MASTER PUMP STATION
SITE PLAN, YARD PIPING
AND EROSION CONTROL PLAN

DATE:
JONATHAN Z GOLDMAN
PE NO. 0048925

PROJECT NO. 6103–234169
FILE NAME: C010STPL.DWG

SHEET NO.
C-10

60% SUBMITTAL - NOT FOR CONSTRUCTION

BYPASS NOTES:

1. INSTALL DOGHOUSE MH ON 54–INCH INFLUENT SANITARY SEWER AND MODIFY 54–INCH SAN S AS DETAILED ON THE DRAWINGS TO ACCEPT BYPASS PUMP SUCTION PIPING AS DETAILED ON THE DRAWINGS.
2. MOBILIZE THE BYPASS PUMPING SYSTEM AND INSTALL TEMPORARY SUCTION AND DISCHARGE PIPING AND INSTALL THE BYPASS SYSTEM DISCHARGE CONNECTION TO THE EXISTING 18–INCH FM (LINE UNDER PRESSURE). THE 18–INCH VALVE TO 42–INCH TRANSMISSION PIPELINE SHOULD BE OPENED.
3. PROVIDE SUITABLE PROTECTION FOR ANY PIPING CROSSING DRIVEWAY AND/OR PARKING AREAS. CONTRACTOR TO DETERMINE FINAL LOCATION AND LAYOUT OF BYPASS PUMPS AND ROUTE FOR SUCTION AND DISCHARGE PIPING ON PUMP STATION SITE.
4. 118TH STREET PS TO REMAIN IN OPERATION UNTIL ALL LINESTOPS, BYPASS PIPING, VALVES CONTROLS AND PUMPING SYSTEMS ARE INSTALLED AND TESTED READY FOR SERVICE.
5. AT LOW FLOW CONDITIONS, TEMPORARILY STOP THE FLOW IN THE SANITARY SEWER MH UPSTREAM OF THE STATION, IMMEDIATELY INSERT THE LINESTOP/PLUG IN THE 54–INCH SEWER DOWNSTREAM OF THE NEW RECTANGULAR MH FOR LONG TERM INSTALLATION AND RELEASE THE FLOW AT THE UPSTREAM MH.
6. BEGIN BYPASS PUMPING OPERATIONS. UPSTREAM PUMP STATIONS DISCHARGING TO THIS STATION WILL REMAIN IN OPERATION.
7. UPON COMPLETION OF PUMP CONSTRUCTION, VERIFY THE NEW STATION DISCHARGE GV IS OPEN, REMOVE LINESTOP/PLUG IN STATION INFLUENT SEWER FROM SPLITTER BOX(AND KEEP READY FOR RE–INSERTION SHOULD STATION OPERATION FAIL) TO RESTORE FLOW TO STATION WETWELL. PLACE 118TH STREET PS PUMPS INTO OPERATION FOR OPERATIONAL TEST.
8. REMOVE BYPASS PUMPS AND TEMPORARY PIPING AFTER ACCEPTANCE AND RESTORE AREA TO SPECIFIED CONDITIONS.
9. MODIFY EXISTING DIESEL PUMP PIPING TO NEW RECTANGULAR MH, SEE DRAWINGS.

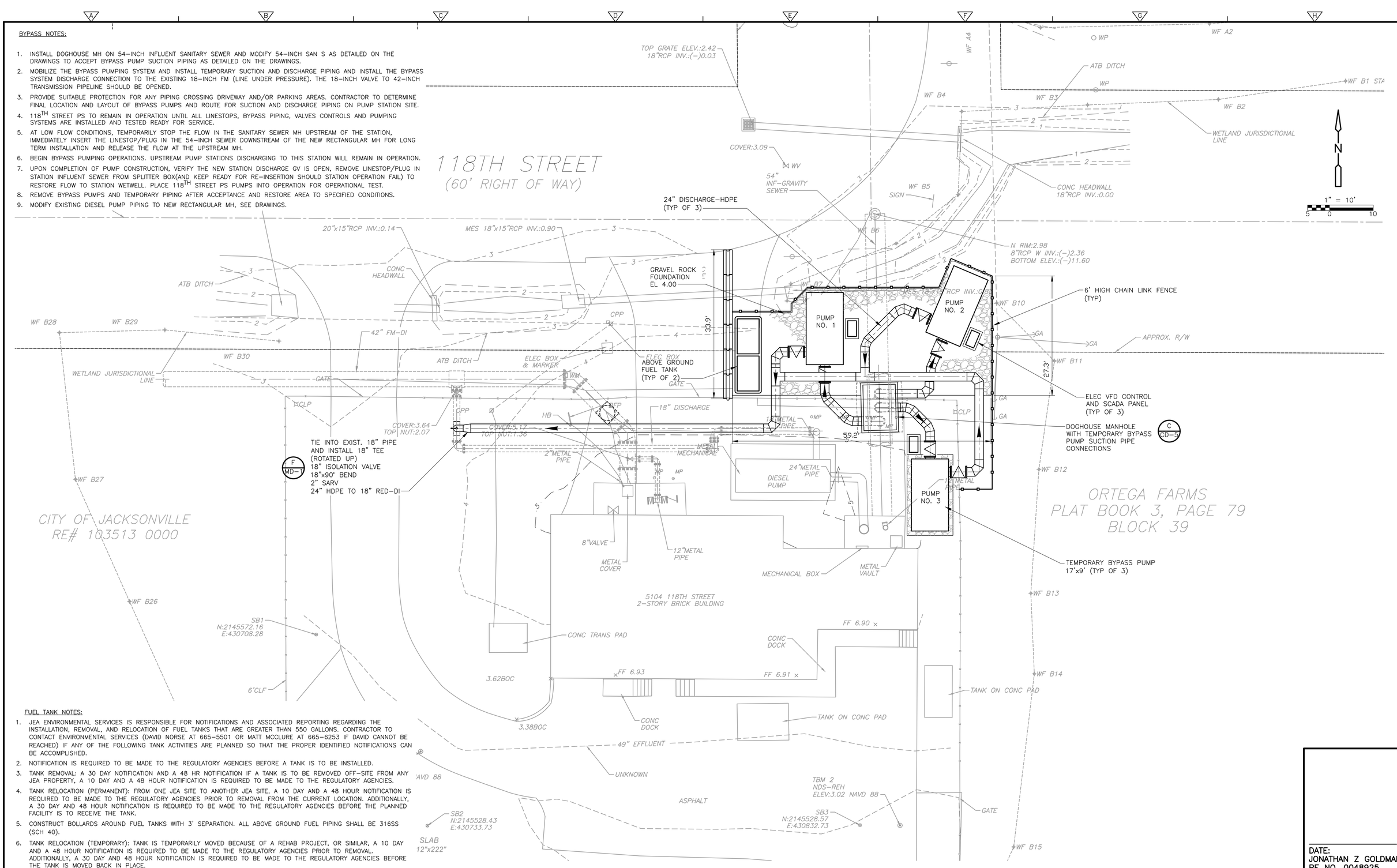


FUEL TANK NOTES:

1. JEA ENVIRONMENTAL SERVICES IS RESPONSIBLE FOR NOTIFICATIONS AND ASSOCIATED REPORTING REGARDING THE INSTALLATION, REMOVAL, AND RELOCATION OF FUEL TANKS THAT ARE GREATER THAN 550 GALLONS. CONTRACTOR TO CONTACT ENVIRONMENTAL SERVICES (DAVID NORSE AT 665–5501 OR MATT MCCLURE AT 665–6253 IF DAVID CANNOT BE REACHED) IF ANY OF THE FOLLOWING TANK ACTIVITIES ARE PLANNED SO THAT THE PROPER IDENTIFIED NOTIFICATIONS CAN BE ACCOMPLISHED.
2. NOTIFICATION IS REQUIRED TO BE MADE TO THE REGULATORY AGENCIES BEFORE A TANK IS TO BE INSTALLED.
3. TANK REMOVAL: A 30 DAY NOTIFICATION AND A 48 HR NOTIFICATION IF A TANK IS TO BE REMOVED OFF–SITE FROM ANY JEA PROPERTY, A 10 DAY AND A 48 HOUR NOTIFICATION IS REQUIRED TO BE MADE TO THE REGULATORY AGENCIES.
4. TANK RELOCATION (PERMANENT): FROM ONE JEA SITE TO ANOTHER JEA SITE, A 10 DAY AND A 48 HOUR NOTIFICATION IS REQUIRED TO BE MADE TO THE REGULATORY AGENCIES PRIOR TO REMOVAL FROM THE CURRENT LOCATION. ADDITIONALLY, A 30 DAY AND 48 HOUR NOTIFICATION IS REQUIRED TO BE MADE TO THE REGULATORY AGENCIES BEFORE THE PLANNED FACILITY IS TO RECEIVE THE TANK.
5. CONSTRUCT BOLLARDS AROUND FUEL TANKS WITH 3' SEPARATION. ALL ABOVE GROUND FUEL PIPING SHALL BE 316SS (SCH 40).
6. TANK RELOCATION (TEMPORARY): TANK IS TEMPORARILY MOVED BECAUSE OF A REHAB PROJECT, OR SIMILAR, A 10 DAY AND A 48 HOUR NOTIFICATION IS REQUIRED TO BE MADE TO THE REGULATORY AGENCIES PRIOR TO REMOVAL. ADDITIONALLY, A 30 DAY AND 48 HOUR NOTIFICATION IS REQUIRED TO BE MADE TO THE REGULATORY AGENCIES BEFORE THE TANK IS MOVED BACK IN PLACE.

| REV. NO. | DATE | DRWN | CHKD | REMARKS |
|---|---|---|---|---|

DESIGNED BY: X
DRAWN BY: A, NUNES
SHEET CHK'D BY: X
CROSS CHK'D BY: X
APPROVED BY: X
DATE: FEBRUARY 2020


CDM Smith
4651 Salisbury Road, Suite 420
Jacksonville, FL 32256
Tel: (904) 731-7109
FL COA No. EB-0000020


JEA

WILSON BLVD. (180-45) AND 118th ST. (180-47)
MASTER PUMP STATION IMPROVEMENTS

118 STREET MASTER PUMP STATION
BYPASS PLAN

DATE:
JONATHAN Z GOLDMAN
PE NO. 0048925

PROJECT NO. 6103–234169
FILE NAME: C011STPL.DWG

SHEET NO.
C-11

60% SUBMITTAL - NOT FOR CONSTRUCTION


XREFs: [CEP001SS, CDMS_2234, CWZ002ST, ANZ001PS, CWZ003ST] Images: []
Last saved by: NUNESAL Time: 2/19/2020 5:02:13 PM
pw:\\cdmsmith-uz02-pw.bentley.com:PW_XM\6103\234169 JEA PDB\04 Design Services NM_60%\02 Civil\10 CADD\C011STPL.dwg
© 2020 CDM SMITH ALL RIGHTS RESERVED.
REUSE OF DOCUMENTS: THESE DOCUMENTS AND DESIGNS PROVIDED BY PROFESSIONAL SERVICE, INCORPORATED HEREIN, ARE THE PROPERTY OF CDM SMITH AND ARE NOT TO BE USED, IN WHOLE OR PART, FOR ANY OTHER PROJECT WITHOUT THE WRITTEN AUTHORIZATION OF CDM SMITH.

THIS DRAWING AND ARE NOT TO BE USED, IN WHOLE OR PART, FOR ANY OTHER PROJECT WITHOUT THE WRITTEN AUTHORIZATION OF CDM SMITH.

## HORIZONTAL & VERTICAL SEPARATION REQUIREMENTS

| | PROPOSED UTILITY | | | | | | | | | | | |
|---|---|---|---|---|---|---|---|---|---|---|---|---|
| | POTABLE WATER | | | WASTEWATER GRAVITY AND FORCE MAIN | | | RECLAIMED WATER | | | VACUUM SEWERS | | |
| CONFLICTING UTILITY | HORIZ. | VERT. | JOINT SPACING* | HORIZ. | VERT. | JOINT SPACING* | HORIZ. | VERT. | JOINT SPACING* | HORIZ. | VERT. | JOINT SPACING* |
| POTABLE WATER | 3' NOTE 1 | 12" | 3' NOTE 2 | 6' to 10' | 12" NOTE 5 | 6' NOTE 2 | 3' | 12" | 6' NOTE 2 | 3' to 10' | 12" | 3' NOTE 2 |
| RECLAIMED WATER | 3' | 12" | 6' NOTE 2 | 3' NOTE 1 | 12" | 3' NOTE 2 | 3' | 12" | 6' NOTE 2 | 3' NOTE 1 | 12" | 3' NOTE 2 |
| WASTEWATER (GRAVITY AND FORCE MAIN) | 6' to 10' | 12" | 6' NOTE 2 | 3' NOTE 1 | 12" | 6" | 3' NOTE 1 | 12" | 3' NOTE 2 | 3' NOTE 1 | 12" | 3' NOTE 2 |
| VACUUM SEWERS | 3' to 10' | 12" | 3' NOTE 2 | 3' NOTE 1 | 12" | 6" | 3' NOTE 1 | 12" | 3' NOTE 2 | 3' NOTE 1 | 12" | 3' NOTE 2 |
| RIGHT OF WAYS | 3' NOTE 1 | N/A | N/A | 3' NOTE 1 | N/A | N/A | 3' NOTE 1 | N/A | N/A | 3' NOTE 1 | N/A | N/A |
| PERMANENT STRUCTURES (BUILDINGS, SIGNS, POLES, ETC.) | SEE NOTE 7 | N/A | N/A | SEE NOTE 7 | N/A | N/A | SEE NOTE 7 | N/A | N/A | SEE NOTE 7 | N/A | N/A |
| STORM SEWERS | 3' NOTE 1 | 12" | 3' NOTE 2 | 3' NOTE 1 | 12" | 3' NOTE 2 | 3' NOTE 1 | 12" | 3' NOTE 2 | 3' NOTE 1 | 12" | 3' NOTE 2 |
| GAS | 3' NOTE 1 | 12" | 3' NOTE 2 | 3' NOTE 1 | 12" | 3' NOTE 2 | 3' NOTE 1 | 12" | 3' NOTE 2 | 3' NOTE 1 | 12" | 3' NOTE 2 |
| TREES | 3'-6' NOTE 6 | N/A | N/A | 3'-6' NOTE 6 | N/A | N/A | 3'-6' NOTE 6 | N/A | N/A | 3'-6' NOTE 6 | N/A | N/A |
| ALL OTHER UTILITIES | 3' NOTE 1 | 12" | 3' NOTE 2 | 3' NOTE 1 | 12" | 3' NOTE 2 | 3' NOTE 1 | 12" | 3' NOTE 2 | 3' NOTE 1 | 12" | 3' NOTE 2 |

NOTES:

1. THIS SEPARATION REQUIREMENT IS TO PROVIDE ACCESSIBILITY FOR CONSTRUCTION AND MAINTENANCE. THREE FEET OF HORIZONTAL SEPARATION IS THE MINIMUM FOR PIPES WITH THREE FEET OF COVER. FOR PIPES INSTALLED AT GREATER DEPTH, PROVIDE AN ADDITIONAL FOOT OF SEPARATION FOR EACH ADDITIONAL FOOT OF DEPTH.
2. THE MINIMUM JOINT SPACING REQUIRED FROM CROSSING FROM OTHER UTILITIES WHILE STILL MAINTAINING MINIMUM VERTICAL SEPARATION.
3. DISTANCES GIVEN ARE FROM OUTSIDE OF PIPE TO OUTSIDE OF PIPE.
4. NO WATER PIPE SHALL PASS THROUGH OR COME INTO CONTACT WITH ANY PART OF SANITARY OR STORM WATER MANHOLE OR STRUCTURES.
5. WATER MAIN SHOULD CROSS ABOVE OTHER PIPES WHENEVER POSSIBLE. WHEN WATER MAIN MUST BE BELOW OTHER UTILITY PIPING, THE MINIMUM SEPARATION SHALL BE 12 INCHES.
6. REFER TO SECTION 429, III.4.3.
7. REFER TO SECTION 429, III.4.2 FOR MINIMUM SEPARATION REQUIREMENTS FROM PIPE TO STRUCTURES.

## SEPARATION REQUIREMENTS FOR WATER, WASTEWATER AND RECLAIMED WATER MAINS

JANUARY 2020 — PLATE S-26

DETAIL A — NTS

WATER MAIN AND NON-WATER MAIN SEPARATION REQUIREMENTS - NOTES

1. IT IS REQUIRED THAT "WATER MAINS" BE INSTALLED, CLEANED, DISINFECTED AND HAVE A SATISFACTORY BACTERIOLOGICAL SURVEY PERFORMED IN ACCORDANCE WITH THE LATEST APPLICABLE AWWA STANDARDS, CHAPTER 62-555, F.A.C. AND LATEST JEA WATER AND SEWER STANDARDS. FOR THE PURPOSE OF THIS SECTION, THE PHRASE "WATER MAINS" SHALL MEAN MAINS, INCLUDING TREATMENT PLANT PROCESS PIPING, CONVEYING EITHER RAW, PARTIALLY TREATED, OR FINISHED DRINKING WATER; FIRE HYDRANT LEADS; AND SERVICE LINES THAT HAVE AN INSIDE DIAMETER OF THREE (3) INCHES OR GREATER. IN ADDITION, THE PHRASE "RECLAIMED WATER" REFERS TO THE WATER REGULATED UNDER PART III OF CHAPTER 62-610, F.A.C.
2. NEW OR RELOCATED, UNDERGROUND WATER MAINS SHALL BE LAID TO PROVIDE A HORIZONTAL DISTANCE OF AT LEAST THREE (3) FEET BETWEEN THE OUTSIDE OF THE WATER MAIN AND THE OUTSIDE OF ANY EXISTING OR PROPOSED STORM SEWER, STORMWATER FORCE MAIN, OR PIPELINE CONVEYING RECLAIMED WATER.
3. NEW OR RELOCATED, UNDERGROUND WATER MAINS SHALL BE LAID TO PROVIDE A HORIZONTAL DISTANCE OF AT LEAST SIX (6) FEET, AND PREFERABLY TEN (10) FEET, BETWEEN THE OUTSIDE OF THE WATER MAIN AND THE OUTSIDE OF ANY EXISTING OR PROPOSED GRAVITY OR PRESSURE-TYPE SANITARY SEWER, WASTEWATER FORCE MAIN, OR PIPELINE CONVEYING RECLAIMED WATER. THE MINIMUM HORIZONTAL SEPARATION DISTANCE BETWEEN WATER MAINS AND GRAVITY-TYPE SANITARY SEWERS MAY BE REDUCED TO THREE (3) FEET WHERE THE BOTTOM OF THE WATER MAIN IS LAID AT LEAST SIX (6) INCHES ABOVE THE TOP OF THE SEWER (SPECIAL CASE).
4. NEW OR RELOCATED, UNDERGROUND WATER MAINS CROSSING ANY EXISTING OR PROPOSED GRAVITY OR VACUUM-TYPE SANITARY SEWER OR STORM SEWER SHALL BE LAID SO THE OUTSIDE OF THE WATER MAIN IS AT LEAST SIX (6) INCHES, AND PREFERABLE TWELVE (12) INCHES, ABOVE OR AT LEAST TWELVE (12) INCHES BELOW THE OUTSIDE OF THE OTHER PIPELINE. HOWEVER, IT IS PREFERABLE TO LAY THE WATER MAIN ABOVE THE OTHER PIPELINE.
5. NEW OR RELOCATED, UNDERGROUND WATER MAINS CROSSING ANY EXISTING OR PROPOSED PRESSURE-TYPE SANITARY SEWER, WASTEWATER OR STORMWATER FORCE MAIN, OR PIPELINE CONVEYING RECLAIMED WATER SHALL BE LAID SO THE OUTSIDE OF THE WATER MAIN IS A LEAST TWELVE (12) INCHES ABOVE OR BELOW THE OUTSIDE OF THE OTHER PIPELINE. HOWEVER, IT IS PREFERABLE TO LAY THE WATER MAIN ABOVE THE OTHER PIPELINE.
6. AT THE UTILITY CROSSINGS DESCRIBED IN NOTES 4 AND 5 ABOVE, ONE FULL LENGTH OF WATER MAIN PIPE SHALL BE CENTERED ABOVE OR BELOW THE OTHER PIPELINE SO THE WATER MAIN JOINTS WILL BE AS FAR AS POSSIBLE FROM THE OTHER PIPELINE. ALTERNATIVELY, AT SUCH CROSSINGS, THE PIPES SHALL BE ARRANGED SO THAT ALL WATER MAIN JOINTS ARE AT LEAST THREE (3) FEET FROM ALL JOINTS IN VACUUM-TYPE SANITARY SEWERS, STORM SEWERS, STORMWATER FORCE MAINS, OR PIPELINES CONVEYING RECLAIMED WATER, AND AT LEAST SIX (6) FEET FROM ALL JOINTS IN GRAVITY OR PRESSURE-TYPE SANITARY SEWERS, WASTEWATER FORCE MAINS, OR PIPELINE CONVEYING RECLAIMED WATER.
7. NEW OR RELOCATED FIRE HYDRANTS SHALL BE LOCATED SO THAT THE HYDRANTS ARE AT LEAST THREE (3) FEET FROM ANY EXISTING OR PROPOSED STORM SEWER, STORMWATER FORCE MAIN, OR PIPELINE CONVEYING RECLAIMED WATER; AT LEAST THREE (3) FEET, AND PREFERABLY TEN (10) FEET, FROM ANY EXISTING OR PROPOSED VACUUM-TYPE SANITARY SEWER; AT LEAST SIX (6) FEET, AND PREFERABLY TEN (10) FEET, FROM ANY EXISTING OR PROPOSED GRAVITY OR PRESSURE-TYPE SANITARY SEWER OR WASTEWATER FORCE MAIN.
8. WHERE AN UNDERGROUND WATER MAIN IS BEING LAID LESS THAN THE REQUIRED MINIMUM HORIZONTAL DISTANCE FROM ANOTHER PIPELINE AND WHERE AN UNDERGROUND WATER MAIN IS CROSSING ANOTHER PIPELINE AND JOINTS IN THE WATER MAIN ARE BEING LOCATED LESS THAN THE REQUIRED MINIMUM DISTANCE FROM JOINTS IN THE OTHER PIPELINE, THE CONTRACTOR SHALL CONSULT THE DESIGN ENGINEER TO OBTAIN APPROVAL OF ANY ALTERNATIVE CONSTRUCTION METHODS, PRIOR TO CONSTRUCTION.

## NOTES ON UTILITY SEPARATION REQUIREMENTS - SEWER

JANUARY 2020 — PLATE S-27

DETAIL D — NTS

NOTES:

1. TRENCH SIDES SHALL BE APPROXIMATELY VERTICAL BETWEEN AN ELEVATION OF 1 FOOT ABOVE THE TOP OF THE PIPE AND THE CENTER LINE OF THE PIPE; OTHERWISE, TRENCH SIDES SHALL BE AS VERTICAL AS POSSIBLE OR AS REQUIRED BY OSHA STANDARDS. REFER TO THE MEASUREMENT AND PAYMENT SECTION (SECTION #801, PARAGRAPH #4)) TO DETERMINE MAXIMUM PAYLINE WIDTHS.
2. BELL HOLE SHALL BE DUG TO PERMIT THE ENTIRE STRAIGHT BARREL OF THE PIPE TO REST ON THE UNDISTURBED TRENCH BOTTOM. BOULDERS OR LOOSE ROCKS LARGER THAN 3/4 INCH IN SIZE WILL NOT BE PERMITTED IN BACKFILL UP TO 1 FOOT ABOVE THE TOP OF THE PIPE.
3. BACK FILL MATERIAL UP TO A LEVEL OF 1 FOOT OVER THE PIPE SHALL CONSIST OF AASHTO CLASS A-3 SOIL (SUITABLE SOIL) AND SHALL EXCLUDE CLAY MATERIALS AND LOOSE ROCKS LARGER THAN 3/4 INCH SIZE.
4. BACKFILL MATERIAL UP TO A LEVEL 1 FOOT OVER THE TOP OF PIPE OR BOTTOM OF STRUCTURES SHALL BE PLACED IN 6 INCH COMPACTED THICKNESS LAYERS AND SHALL BE COMPACTED TO 98% OF IT'S MAXIMUM DENSITY AS DETERMINED BY THE LABORATORY MODIFIED PROCTOR TEST, ASTM D1557.
5. SEE " EXCAVATION AND EARTHWORK", SECTION 408 FOR ADDITIONAL REQUIREMENTS INCLUDING REMOVAL AND REPLACEMENT OF UNSUITABLE SOILS, DEWATERING, COMPACTION REQUIREMENTS AND DENSITY TESTING OF COMPACTED SOILS.

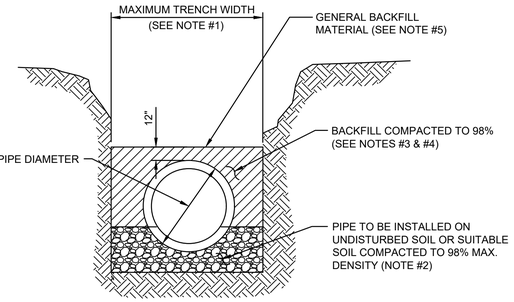


**TYPICAL TRENCH**

## OPEN CUT TRENCH FOR PRESSURE PIPE

JANUARY 2019 — IN CITY RIGHT -OF-WAY — PLATE W-42

DETAIL B — NTS

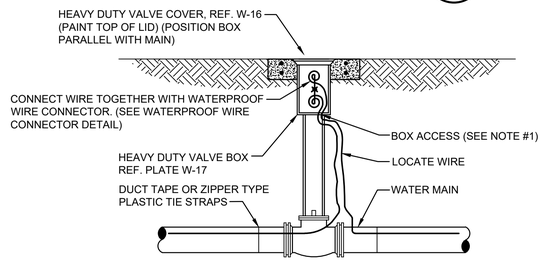


**LOCATE WIRE BOX UTILIZING VALVE BOX**

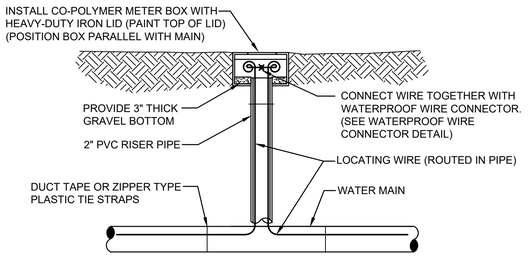


**LOCATE WIRE BOX UTILIZING METER BOX**

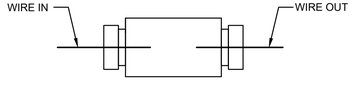


**WATERPROOF WIRE CONNECTOR DETAIL**

NOTES:

1. LOCATE WIRE SHALL ENTER THE VALVE BOX THROUGH A "V" CUT IN THE 6" PVC RISER PIPE (SEE W-18).
2. LOCATE WIRE SHALL HAVE ENOUGH SLACK TO REACH 4' ABOVE FINAL GRADE AND LOCATE POINTS.
3. LOCATE WIRE CONNECTION SHALL ONLY BE A 2 WAY CONNECTION.

## LOCATE WIRE BOX

JANUARY 2020 — PLATE S-49B

DETAIL E — NTS

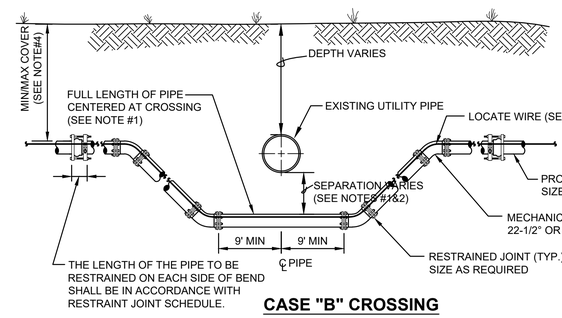


**CASE "B" CROSSING**

NOTES:

1. IF EXISTING CONFLICT PIPE IS A WATER OR RECLAIMED WATER MAIN, 12-INCHES OF SEPARATION IS REQUIRED.A FULL LENGTH OF PIPE SHALL BE CENTERED OVER EXISTING UTILITY MAIN TO PROVIDE MAXIMUM JOINT SPACING FOR ALL CROSSINGS.
2. FOR OTHER LOCATION LIMITATIONS SEE DETAIL (S-26 & S-27).
3. LOCATING WIRE REQUIRED: SEE DETAIL S-49.
4. THE COVER FOR PIPING LESS THAN 24" SIZE SHALL BE 30" (MIN) IN UNPAVED AREAS, 36" (MIN) IN PAVED AREAS AND A MAXIMUM COVER OF 60", UNLESS PRE-APPROVED BY JEA. THE COVER FOR PIPING 24" SIZE AND LARGER SHALL BE 36" (MIN) IN PAVED AND UNPAVED AREAS AND A MAXIMUM COVER OF 84", UNLESS APPROVED BY JEA.
5. THE SOILS BETWEEN THE MAIN AND THE CONFLICT PIPE SHALL BE COMPACTED TO 98% OF THE MAXIMUM DENSITY AS DETERMINED BY THE LABORATORY MODIFIED PROCTOR TEST ASTM D 1557.

## ADJUSTMENT UNDER EXISTING UTILITIES MECHANICAL RESTRAINTS

JANUARY 2020 — PLATE S-41

DETAIL C — NTS

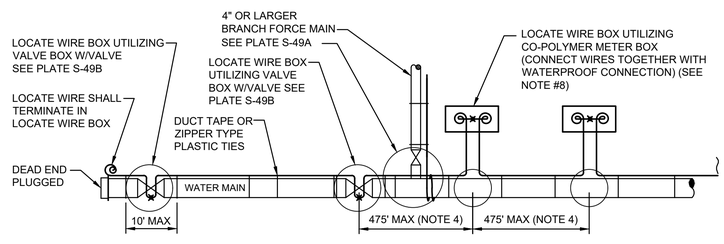


LOCATE WIRE SYSTEM

NOTES:

1. LOCATING WIRE TO BE INSTALLED IN EITHER THE ONE OR ELEVEN O'CLOCK POSITION ON ALL DUCTILE IRON 0R PVC (PRESSURE MAINS). LOCATE WIRE SHALL ALSO BE INSTALLED ON ALL (HDPE) POLY MAIN PIPING (1:00 OR 11:00 POSITION, IF POSSIBLE).
2. SECURE LOCATING WIRE TO PVC FORCE MAIN BY USE OF DUCT TAPE OR ZIPPER TYPE PLASTIC TIE STRAPS SPACED AT A MAXIMUM DISTANCE OF TEN (10') AND AT EACH SIDE OF BELL JOINT OR FITTING.
3. THE ENTIRE LOCATING SYSTEM SHALL BE SUBJECTED TO TESTING TO DETERMINE ITS RELIABILITY. WHERE INSTALLED UNDER PAVEMENT AREAS, TESTING SHALL BE DONE PRIOR TO THE PLACEMENT OF PAVEMENT, UNLESS APPROVED OTHERWISE BY JEA.
4. LOCATING WIRE SHALL TERMINATE WITHIN AN ACTIVE VALVE BOX ( WITH A VALVE ) OR A METER BOX ( IF NO VALVE ) AT 475' INTERVALS. SEE DETAIL PLATE S-49B. WIRE CONNECTIONS BELOW GROUND (OUTSIDE OF A BOX) SHALL BE AVOIDED.
5. LOCATING WIRE SHALL BE 12 GAUGE COPPER WIRE WITH .03 INCHES (MINUMUM) HDPE INSULATION THICKNESS, 0.141 INCHES (MINIMUN) O.D. RATED BREAK LOAD 250LBS., UF RATED (DIRECT BURIAL), GREEN COLOR. FOR HDD INSTALLATIONS, THE LOCATE WIRE SHALL BE COPPER CODED STEEL AS SPECIFIED IN SPEC. SECTION 750.
6. ✕ INDICATES THAT THE WIRES ARE CONNECTED TOGETHER WITH WATERPROOF CONNECTION. (SEE DETAIL W-49B)
7. ⓒ INDICATES A WIRE PIG-TAIL (24" LONG)
8. AN "LW" CUT SHALL BE CARVED IN THE CONCRETE CURB AND PAINTED AT ALL LOCATE WIRE BOXES.
9. FOUR LANES OF TRAFFIC (HAVING TWO LANES OF TRAFFIC IN EACH DIRECTION) OR GREATER THE LOCATE WIRE AND VALVE BOX SHALL BE OFF-SET TO THE RIGHT-OF-WAY.

## LOCATE WIRE CONSTRUCTION FOR FORCE MAINS

JANUARY 2020 — PLATE S-49

DETAIL F — NTS

DATE:
JONATHAN Z GOLDMAN
PE NO. 0048925

| REV. NO. | DATE | DRWN | CHKD | REMARKS |
|---|---|---|---|---|

DESIGNED BY: X
DRAWN BY: A. NUNES
SHEET CHK'D BY: X
CROSS CHK'D BY: X
APPROVED BY: X
DATE: FEBRUARY 2020

CDM Smith
4651 Salisbury Road, Suite 420
Jacksonville, FL 32256
Tel: (904) 731-7109
FL COA No. EB-0000020

JEA

WILSON BLVD. (180-45) AND 118th ST. (180-47)
MASTER PUMP STATION IMPROVEMENTS

CIVIL DETAILS

PROJECT NO. 6103-234169
FILE NAME: CD01DETL.DWG

SHEET NO.
CD-1

60% SUBMITTAL - NOT FOR CONSTRUCTION

XREFs: [CDMS_2234] Images: []
Last saved by: NUNESAL Time: 2/18/2020 11:09:08 AM
pw:\\cdmsmith-az02-pw.bentley.com:PW_XM\\6103\234169 JEA PDB\04 Design Services NM_60%\02 Civil\10 CADD\CD01DETL.dwg
©2020 CDM SMITH ALL RIGHTS RESERVED.
REUSE OF DOCUMENTS: THESE DOCUMENTS AND DESIGNS PROVIDED BY PROFESSIONAL SERVICE, INCORPORATED HEREIN, ARE THE PROPERTY OF CDM SMITH AND

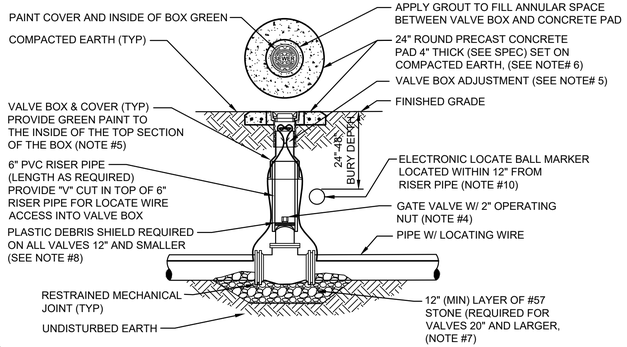


NOTES:

1. FOR UNPAVED LOCATIONS, A PRECAST CONCRETE VALVE PAD SHALL BE PROVIDED AND INSTALLED FLUSH WITH GRADE. CONCRETE PAD IS NOT REQUIRED FOR VALVE LOCATED IN THE ROADWAY, UNLESS SHOWN OR NOTED OTHERWISE.
2. LOCATING WIRE IS REQUIRED ON ALL PRESSURE PIPING (SEE DETAIL S-49).
3. A "V" CUT SHALL BE CARVED IN THE CURB CLOSEST/(ASPHALT IF NO CURB) ADJACENT TO ALL BELOW GRADE VALVES. THE "V" CUT IS TO BE PAINTED GREEN.
4. IN PAVED AREAS, INSTALL VALVE AT A DEPTH TO ALLOW A 12" MIN. DISTANCE BETWEEN THE VALVE COVER PLATE AND THE TOP OF THE VALVE OPERATING NUT. OUTSIDE OF PAVED AREAS (GRASS), INSTALL VALVE AT A DEPTH TO ALLOW A 6" MINIMUM DISTANCE BETWEEN THE VALVE COVER AND THE TOP OF THE VALVE OPERATING NUT. OPERATING NUT/STEM EXTENSION SHALL BE PROVIDED (WHERE APPLICABLE) SO THAT THE OPERATING NUT WILL BE NO MORE THAN 30 INCHES BELOW FINISHED GRADE.
5. FOR NEW CONSTRUCTION, THE VALVE BOX SHALL BE ADJUSTED TO MIDRANGE TO ALLOW FOR FUTURE BOX ADJUSTMENTS. ROUTE LOCATE WIRES THRU A "V" CUT IN THE TOP OF THE 6" PVC RISER PIPE FOR LOCATE WIRE ACCESS INTO VALVE BOX. THE LOCATE WIRES WITH A 24" LONG PIG-TAIL AT THE TOP SHALL BE CONNECTED TOGETHER WITH A WIRE NUT.
6. BRASS IDENTIFICATION TAG INDICATING "SEWER", VALVE SIZE, DIRECTION AND TURNS TO OPEN & VALVE TYPE. PROVIDE A ⅛" HOLE IN BRASS TAG AND ATTACH TAG (TWIST WIRE AROUND TAG) TO THE END OF THE LOCATE WIRE. TAGS ARE NOT REQUIRED ON VALVES INSTALLED ON FIRE HYDRANT BRANCH LINES.
7. IN LIEU OF PRECAST CONCRETE PAD, A 6" THICK X 24" (ROUND OR SQUARE) POURED CONCRETE PAD W/2 - #4 REBAR AROUND PERIMETER, MAY BE USED.
8. GRAVEL SHALL BE PROVIDED UNDER ALL VALVES 20" AND LARGER. THE MINIMUM VERTICAL LIMIT OF GRAVEL IS 12" UNDER THE VALVE UP TO ½ THE OVERALL HEIGHT OF THE VALVE.
9. FOR VALVES 12 INCH AND SMALLER, PROVIDE A WHITE OR BLACK PLASTIC DEBRIS SHIELD WHICH INSTALLS BELOW THE OPERATING NUT. THIS SHIELD SHALL CENTER THE RISER PIPE BOX OVER THE OPERATING NUT AND MINIMIZE INFILTRATION. SHIELD SHALL BE BY AFC, BOXLOK OR APPROVED EQUAL.
10. ALL VALVES SHALL BE INSTALLED WITH AN ELECTRIC LOCATE MARKER. MARKER SHALL BE 4" DIA. COLOR CODED BALL MARKER (3M-1404XR FOR SEWER).

# SEWER VALVE DETAIL

JANUARY 2020 — PLATE S-30

DETAIL A / NTS

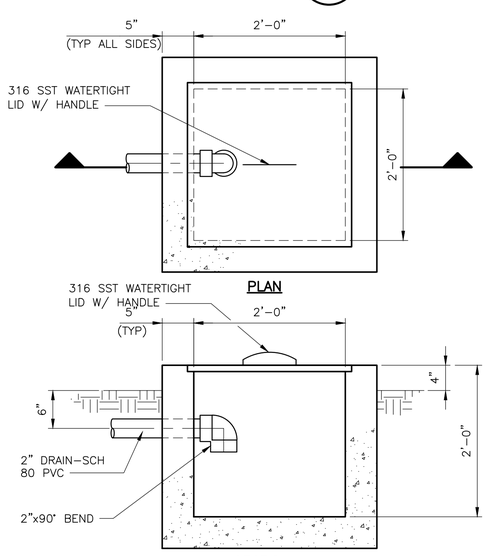


NOTES:

1. PRECAST CONCRETE SHALL BE MANUFACTURED IN ACCORDANCE WITH THE LATEST EDITIONS OF ASTM C-478 WITH 4000 LB CONCRETE, TYPE II CEMENT.

PRECAST CONCRETE DRAIN BOX

DETAIL D / NTS / C-3

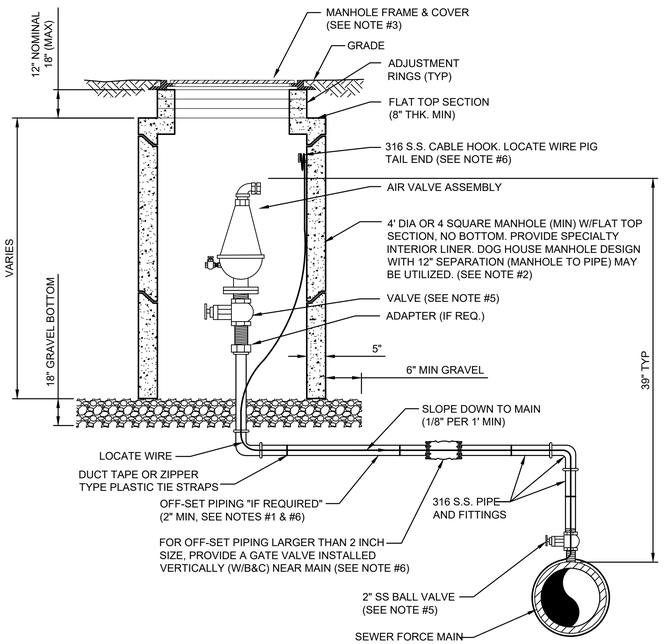


NOTES:

1. THE AIR ASSEMBLY MANHOLE SHALL BE LOCATED OUTSIDE OF THE ROADWAY PAVEMENT AREA (I.E. LOCATED IN NON-TRAFFIC AREAS). IF OFF-SET PIPING IS REQUIRED, THE PIPING SHALL BE 2 INCH MINIMUM, (SAME SIZE AS AIR VALVE INLET). FOR PIPE SIZES 3 INCH AND SMALLER: PIPING SHALL BE 316 STAINLESS STEEL SCH.40, STD GRADE, THREADED. FOR PIPE SIZES 4 INCH AND LARGER: PIPING SHALL BE 316 STAINLESS STEEL SCH. 10 (MIN), WELDED OR PVC DR-18 PIPE AND FITTINGS-RESTRAINED.
2. THE CONCRETE MANHOLE SHALL INCLUDE A POLYURETHANE SPECIALTY LINER (PER SPEC SECTION 446) TO BE INSTALLED ON THE INTERIOR SURFACES INCLUDING THE RISER SECTION TOP AND THE ADJUSTMENT RINGS. A BITUMINOUS WATERPROOFING MATERIAL SHALL BE PROVIDED ON THE OUTSIDE SURFACES OF THE MANHOLE.
3. FRAME AND COVER SHALL BE JEA STANDARD. THE COVER SHALL HAVE NO GASKET TO ALLOW AIR TO EXIT VAULT (REMOVE GASKET IF NECESSARY FROM THE UNDER SIDE OF STANDARD JEA COVER). THE COVER (WHEN FLIPPED OPEN) MUST CLEAR THE AIR VALVE ASSEMBLY AT ALL TIMES OR A SQUARE TOP WITH ALUMINUM DOOR SHALL BE PROVIDED (NON-TRAFFIC LOCATIONS ONLY).
4. FOR PIPE SIZES 3 INCH AND SMALLER, PROVIDE A STAINLESS STEEL BALL VALVE (2" MIN). FOR PIPE SIZES 4 INCH AND LARGER, PROVIDE A FLANGE GATE VALVE (WHEEL OPERATOR) OR PLUG VALVE. (LEVER ARM OPERATOR) SEE SPECIFICATION FOR ADDITIONAL REQUIREMENTS.
5. FOR A 2" AIR VALVE, PROVIDE 2" STAINLESS STEEL BALL VALVE AT THE MAIN. FOR AIR VALVES LARGER THAN 2" SIZE, PROVIDE A TAPPING SLEEVE OR DUCTILE IRON TEE FITTING. ALSO, FOR OFF-SET PIPING LARGER THAN 2 INCH SIZE, PROVIDE A GATE VALVE (INSTALLED VERTICALLY NEAR MAIN). SEE SPECIFICATIONS FOR ADDITIONAL REQUIREMENTS.
6. LOCATE WIRE SHALL HAVE ENOUGH SLACK TO REACH 4' ABOVE FINAL GRADE.

# AIR VALVE ASSEMBLY INSIDE MANHOLE

JANUARY 2020 — PLATE S-29

DETAIL B / NTS

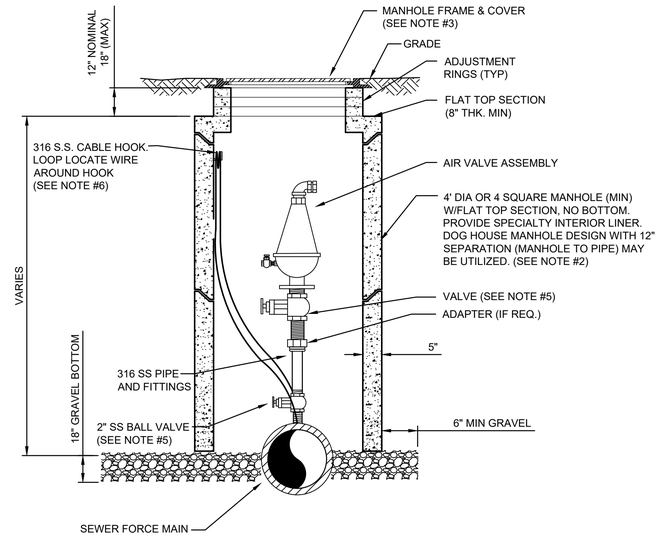


NOTES:

1. THE AIR ASSEMBLY MANHOLE SHALL BE LOCATED OUTSIDE OF THE ROADWAY PAVEMENT AREA (I.E. LOCATED IN NON-TRAFFIC AREAS).
2. THE CONCRETE MANHOLE SHALL INCLUDE A POLYURETHANE SPECIALTY LINER (PER SPEC SECTION 446) TO BE INSTALLED ON THE INTERIOR SURFACES INCLUDING THE RISER SECTION TOP AND THE ADJUSTMENT RINGS. A BITUMINOUS WATERPROOFING MATERIAL SHALL BE PROVIDED ON THE OUTSIDE SURFACES OF THE MANHOLE.
3. FRAME AND COVER SHALL BE JEA STANDARD. THE COVER SHALL HAVE NO GASKET TO ALLOW AIR TO EXIT VAULT (REMOVE GASKET IF NECESSARY FROM THE UNDER SIDE OF STANDARD JEA COVER). THE COVER (WHEN FLIPPED OPEN) MUST CLEAR THE AIR VALVE ASSEMBLY AT ALL TIMES OR A SQUARE TOP WITH ALUMINUM DOOR SHALL BE PROVIDED (NON-TRAFFIC LOCATIONS ONLY).
4. FOR PIPE SIZES 3 INCH AND SMALLER, PROVIDE A STAINLESS STEEL BALL VALVE (2" MIN). FOR PIPE SIZES 4 INCH AND LARGER, PROVIDE A FLANGE GATE VALVE (WHEEL OPERATOR) OR PLUG VALVE. (LEVER ARM OPERATOR) SEE SPECIFICATION FOR ADDITIONAL REQUIREMENTS.
5. FOR A 2" AIR VALVE, PROVIDE 2" STAINLESS STEEL BALL VALVE AT THE MAIN. FOR AIR VALVES LARGER THAN 2" SIZE, PROVIDE A TAPPING SLEEVE OR DUCTILE IRON TEE FITTING. ALSO, FOR OFF-SET PIPING LARGER THAN 2 INCH SIZE, PROVIDE A GATE VALVE (INSTALLED VERTICALLY NEAR MAIN). SEE SPECIFICATIONS FOR ADDITIONAL REQUIREMENTS.
6. LOCATE WIRE SHALL HAVE ENOUGH SLACK TO REACH 4' ABOVE FINAL GRADE.

# AIR VALVE ASSEMBLY INSIDE MANHOLE IN ROW

JANUARY 2020 — PLATE S-29B

DETAIL C / NTS

DATE:
JONATHAN Z GOLDMAN
PE NO. 0048925

| REV. NO. | DATE | DRWN | CHKD | REMARKS |
|---|---|---|---|---|

DESIGNED BY: X
DRAWN BY: A. NUNES
SHEET CHK'D BY: X
CROSS CHK'D BY: X
APPROVED BY: X
DATE: FEBRUARY 2020

CDM Smith
4651 Salisbury Road, Suite 420
Jacksonville, FL 32256
Tel: (904) 731-7109
FL COA No. EB-0000020

JEA

WILSON BLVD. (180-45) AND 118th ST. (180-47)
MASTER PUMP STATION IMPROVEMENTS

CIVIL DETAILS

PROJECT NO. 6103-234169
FILE NAME: CD02DETL.DWG

SHEET NO.
CD-2

60% SUBMITTAL - NOT FOR CONSTRUCTION

XREFs: [CDMS_2234] Images: []
Last saved by: NUNESAL Time: 2/18/2020 11:15:11 AM
pw:\\cdmsmith-az02-pw.bentley.com:PW_XM1\6103\234169 JEA PDB\04 Design Services NM_60%\02 Civil\10 CADD\CD02DETL.dwg
©2020 CDM SMITH ALL RIGHTS RESERVED
REUSE OF DOCUMENTS: THESE DOCUMENTS AND DESIGNS PROVIDED BY PROFESSIONAL SERVICE, INCORPORATED HEREIN, ARE THE PROPERTY OF CDM SMITH AND ARE NOT TO BE USED, IN WHOLE OR PART, FOR ANY OTHER PROJECT WITHOUT THE WRITTEN AUTHORIZATION OF CDM SMITH.

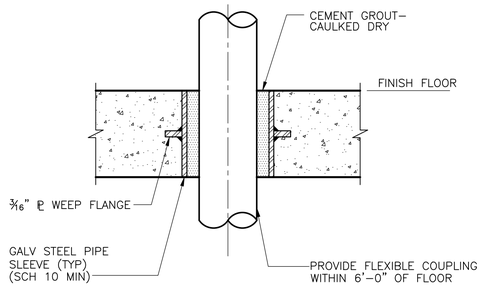


NOTE: DIA = PIPE O.D. + 2" MIN.

## PIPE SLEEVE W/GROUT FLOOR PENETRATION

DETAIL A — NTS

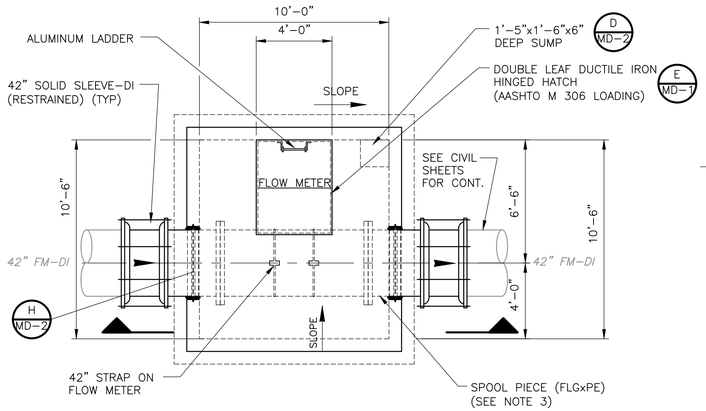


## METER VAULT PLAN

NOTES:

1. SEE ELECTRICAL SHEETS FOR CONDUIT PENETRATION REQUIREMENTS.
2. ROTATE THE ASSEMBLY 45° FACING THE ALUMINUM LADDER. (NOT ROTATED IN DRAWING FOR CLARITY).
3. CONTRACTOR TO CONFIRM REQUIRED SPOOL PIECE LAY LENGTH DIMENSION WITH FLOW METER MANUFACTURER.
4. CONTRACTOR TO CONFIRM FINAL GRADE AND MAIN ELEVATIONS.
5. ALL BELOW PIPING SHALL BE RESTRAINED.
6. MATCH GRADE IN CONCRETE PAVEMENT.
7. COORDINATE EXACT LOCATION AND INSTALLATION REQUIREMENTS OF STRAP ON FLOW METER WITH MANUFACTURER.
8. ALL PIPE IN VAULT IS DI.
9. MINIMUM 5 PIPE DIAMETERS UPSTREAM OF FLOW METER TO VALVE.
10. CONTRACTOR TO PROVIDE A 20" FLGxFLG SPOOL PIECE OF EQUAL LENGTH OF METER TO OWNER.

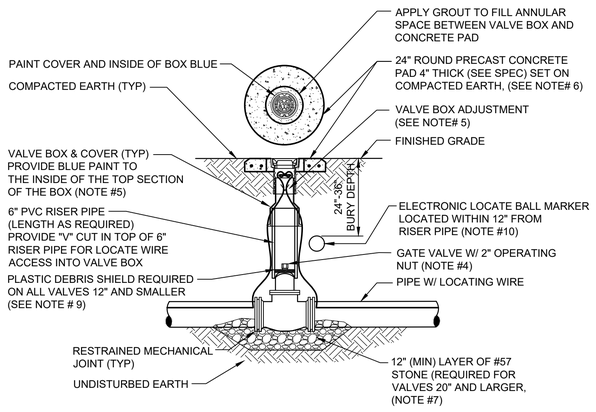


NOTES:

1. FOR UNPAVED LOCATIONS, A PRECAST CONCRETE VALVE PAD SHALL BE PROVIDED AND INSTALLED FLUSH WITH GRADE. CONCRETE PAD IS NOT REQUIRED FOR VALVE LOCATED IN THE ROADWAY, UNLESS SHOWN OR NOTED OTHERWISE.
2. LOCATING WIRE IS REQUIRED ON ALL PRESSURE PIPING (SEE DETAILW-44).
3. A "V" CUT SHALL BE CARVED IN THE CURB CLOSEST/ADJACENT/( ASPHALT IF NO CURB) TO ALL BELOW GRADE VALVES. THE "V" CUT IS TO BE PAINTED BLUE WATER/PURPLE RECLAIMED.
4. IN PAVED AREAS, INSTALL VALVE AT A DEPTH TO ALLOW A 12" MIN. DISTANCE BETWEEN THE VALVE COVER PLATE AND THE TOP OF THE VALVE OPERATING NUT. OUTSIDE OF PAVED AREAS (GRASS), INSTALL VALVE AT A DEPTH TO ALLOW A 6" MINIMUM DISTANCE BETWEEN THE VALVE COVER AND THE TOP OF THE VALVE OPERATING NUT. OPERATING NUT/STEM EXTENSION SHALL BE PROVIDED (WHERE APPLICABLE) SO THAT THE OPERATING NUT WILL BE NO MORE THAN 30 INCHES BELOW FINISHED GRADE.
5. FOR NEW CONSTRUCTION, THE VALVE BOX SHALL BE ADJUSTED TO MIDRANGE TO ALLOW FOR FUTURE BOX ADJUSTMENTS. ROUTE LOCATE WIRES THRU A "V" CUT IN THE TOP OF THE 6" PVC RISER PIPE FOR LOCATE WIRE ACCESS INTO VALVE BOX. THE LOCATE WIRES WITH A 24" LONG PIG-TAIL AT THE TOP SHALL BE CONNECTED TOGETHER WITH A WIRE NUT.
6. BRASS IDENTIFICATION TAG INDICATING "WATER", VALVE SIZE, DIRECTION AND TURNS TO OPEN & VALVE TYPE. PROVIDE A ¼" HOLE IN BRASS TAG AND ATTACH TAG (TWIST WIRE AROUND TAG) TO THE END OF THE LOCATE WIRE. TAGS ARE NOT REQUIRED ON VALVES INSTALLED ON FIRE HYDRANT BRANCH LINES.
7. IN LIEU OF PRECAST CONCRETE PAD, A 6" THICK X 24" (ROUND OR SQUARE) POURED CONCRETE PAD W/2 - #4 REBAR AROUND PERIMETER, MAY BE USED.
8. GRAVEL SHALL BE PROVIDED UNDER ALL VALVES 20" AND LARGER. THE MINIMUM VERTICAL LIMIT OF GRAVEL IS 12" UNDER THE VALVE UP TO ½ THE OVERALL HEIGHT OF THE VALVE.
9. FOR VALVES 12 INCH AND SMALLER, PROVIDE A WHITE OR BLACK PLASTIC DEBRIS SHIELD WHICH INSTALLS BELOW THE OPERATING NUT. THIS SHIELD SHALL CENTER THE RISER PIPE BOX OVER THE OPERATING NUT AND MINIMIZE INFILTRATION. SHIELD SHALL BE BY AFC, BOXLOK OR APPROVED EQUAL.
10. ALL VALVES SHALL BE INSTALLED WITH AN ELECTRIC LOCATE MARKER. MARKER SHALL BE 4" DIA. COLOR CODED BALL MARKER (3M-1403XR FOR WATER AND 1408XR FOR RECLAIMED WATER).

## WATER VALVE INSTALLATION DETAIL

JANUARY 2019 — PLATE W-18

DETAIL E — NTS

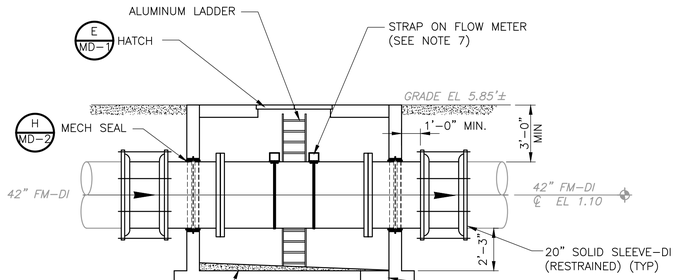


## METER VAULT SECTION

DETAIL B — 1/4" = 1'–0" — C–10

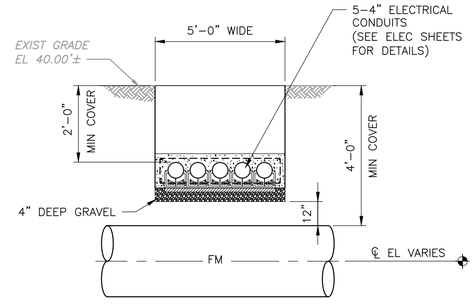


## FM AND ELECTRICAL CORRIDOR CLEARANCE DETAIL

DETAIL G — NTS — C–10

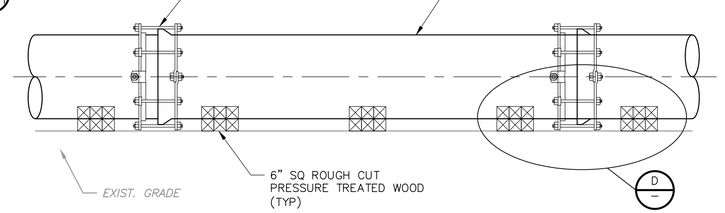


## ABOVE GROUND TEMPORARY PIPING

DETAIL C — NTS

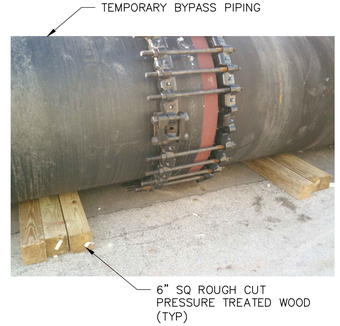


## TEMPORARY DUNNAGE FOR PIPE SUPPORT

DETAIL D — NTS

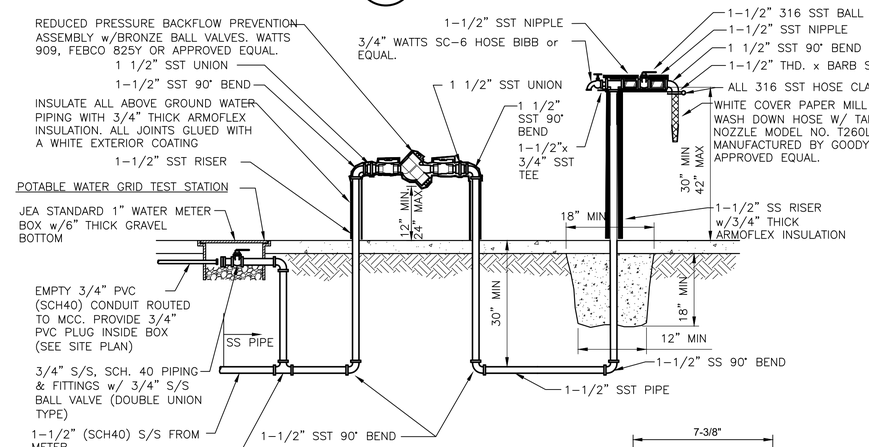


NOTE: ALL PIPING ABOVE AND UNDER CONCRETE SLAB SHALL BE 316 SST SCHEDULE 40.

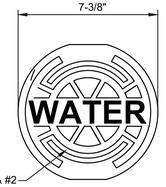


## HOSE STATION

DETAIL F — NTS — C–10

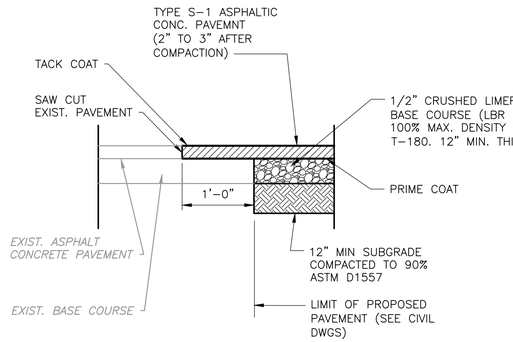


## CONNECTION TO EXIST. PAVEMENT

DETAIL H — NTS

## HEAVY DUTY RATING

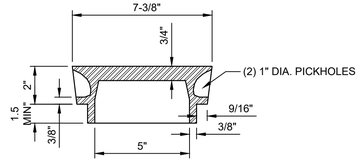


NOTES:

1. PAINT TOP OF THE COVER WITH ENAMEL PAINT (BLUE COLOR) FOR WATER.
2. FOR "REUSE" PAINT TOP PANTONE PURPLE.
3. LID WEIGHT: APPROX. 12 LBS.

## WATER SYSTEM VALVE BOX COVER

JANUARY 2019 — PLATE W-16

DETAIL J — N.T.S

| REV. NO. | DATE | DRWN | CHKD | REMARKS |
|---|---|---|---|---|
| | | | | |

DESIGNED BY: X
DRAWN BY: A. NUNES
SHEET CHK'D BY: X
CROSS CHK'D BY: X
APPROVED BY: X
DATE: FEBRUARY 2020

CDM Smith
4651 Salisbury Road, Suite 420
Jacksonville, FL 32256
Tel: (904) 731-7109
FL COA No. EB-0000020

JEA

WILSON BLVD. (180-45) AND 118th ST. (180-47)
MASTER PUMP STATION IMPROVEMENTS

CIVIL DETAILS

DATE:
JONATHAN Z GOLDMAN
PE NO. 0048925

PROJECT NO. 6103–234169
FILE NAME: CD03DETL.DWG

SHEET NO.
CD-3

60% SUBMITTAL - NOT FOR CONSTRUCTION

XREFs: [CDMS_2234] Images: [IMAGE11]
Last saved by: NUNESAL Time: 2/18/2020 12:44:07 PM
pw:\\cdmsmith-ac02-pw.bentley.com:PW_AM1\6103\234169 JEA PDB\04 Design Services NM_60%\02 Civil\10 CADD\CD03DETL.dwg
©2020 CDM SMITH ALL RIGHTS RESERVED.
REUSE OF DOCUMENTS: THESE DOCUMENTS AND DESIGNS PROVIDED BY PROFESSIONAL SERVICE, INCORPORATED HEREIN, ARE THE PROPERTY OF CDM SMITH AND ARE NOT TO BE USED, IN WHOLE OR PART, FOR ANY OTHER PROJECT WITHOUT THE WRITTEN AUTHORIZATION OF CDM SMITH.

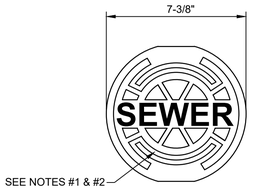


**HEAVY DUTY RATING**

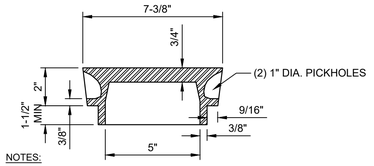


NOTES:

1. PAINT TOP OF THE COVER WITH ENAMEL PAINT (GREEN COLOR).
2. LID WEIGHT: APPROX. 12 LBS.

# SEWER SYSTEM VALVE BOX COVER

JANUARY 2020 PLATE S-31

DETAIL A
NTS

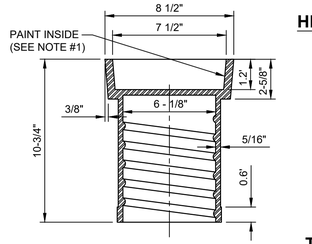


**HEAVY DUTY RATING**

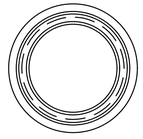

**TOP SECTION VIEW**
(23 LBS. APPROX.)

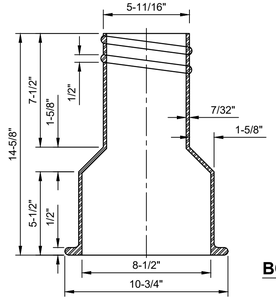


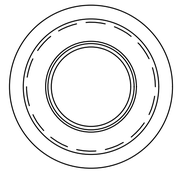

**BOTTOM SECTION VIEW**
(26 LBS. APPROX.)

NOTES:

1. PAINT THE INSIDE OF THE TOP SECTION OF THE BOX WITH GREEN COLOR.
2. HEAVY DUTY RATING (TOTAL WEIGHT APPROX. 50 LBS.).
3. REFERENCE SECTION 430, PARAGRAPH VI.2.

# SEWER SYSTEM VALVE BOX

JANUARY 2020 PLATE S-32

DETAIL B
NTS

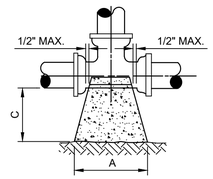


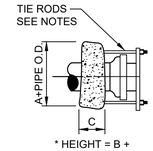


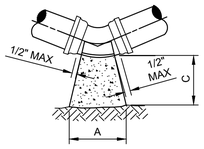


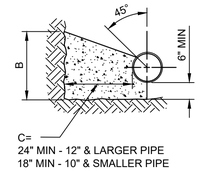


NOTES:

1. ALL BEARING SURFACES TO BE CARRIED TO UNDISTURBED SOIL.
2. THESE TABLES SHOW MINIMUM SIZES FOR THRUST BLOCKS IN GOOD SOIL (A-1 THRU A-3, CLEAN SANDS AND GRAVELS) WITH MINIMUM BEARING CAPACITY OF 2000 psi.
3. POOR SOILS A-4 THRU A-8, SILTY SOILS, CLAYS, MUCK AND PEAT WILL REQUIRE LARGER THRUST BLOCKING.
4. BOTH CONCRETE THRUST BLOCKS AND TIE RODS MUST BE USED WHEN, IN THE JUDGEMENT OF THE ENGINEER, THE NATURE AND CRITICALITY OF AN INSTALLATION IS SUCH AS TO REQUIRE POSITIVE ASSURANCE OF STABILITY.
5. THE USE OF THRUST BLOCKS SHALL BE LIMITED TO SITUATIONS SUCH AS POINT REPAIR WHERE EXPOSING SEVERAL JOINTS OF PIPE IS NOT FEASIBLE DUE TO EXISTING GROUND CONDITIONS.
6. CONCRETE COLLARS WITH TIE RODS MAY BE USED ON DEAD END LINES AT THE CONTRACTOR'S DISCRETION. NUMBER OF TIE RODS REQUIRED IS AS FOLLOWS:
   - 3" - 8" DIAMETER MAIN - 2 TIE RODS REQUIRED PER JOINT (3/4" ROD)
   - 10" - 12" DIAMETER MAIN - 4 TIE RODS REQUIRED PER JOINT (3/4" ROD)
   - 14" - 16" DIAMETER MAIN - 6 TIE RODS REQUIRED PER JOINT (3/4" ROD)
   - 18" - 20" DIAMETER MAIN - 8 TIE RODS REQUIRED PER JOINT (3/4" ROD)
   - 24" DIAMETER MAIN -12 TIE RODS REQUIRED PER JOINT (3/4" ROD)
   - 30" - 36" DIAMETER MAIN - 14 TIE RODS REQUIRED PER JOINT (1" ROD)
   - 42" - 48" DIAMETER MAIN - 16 TIE RODS REQUIRED PER JOINT (1 1/4" ROD)
   - 54" DIAMETER MAIN - 18 TIE RODS REQUIRED PER JOINT (1 1/4" ROD)
7. MAXIMUM TEST PRESSURE TO BE 150 PSI.

THRUST BLOCK FOR TEES & PLUGS

| SIZE | 90° BEND A | 90° BEND B | 90° BEND C | S.F. BEARING SURFACE |
|---|---|---|---|---|
| 4" | 16" | 16" | 18" | 1.78 |
| 6" | 20" | 24" | 18" | 3.33 |
| 8" | 26" | 32" | 18" | 5.78 |
| 10" | 32" | 40" | 18" | 8.89 |
| 12" | 36" | 48" | 24" | 12.00 |
| 14" | 40" | 56" | 24" | 15.56 |
| 16" | 48" | 60" | 24" | 20.00 |
| 18" | 56" | 64" | 24" | 24.89 |
| 20" | 60" | 76" | 24" | 31.67 |
| 24" | 72" | 90" | 24" | 45.00 |
| 30" | 86" | 102" | 24" | 60.67 |
| 36" | 116" | 108" | 24" | 86.11 |

THRUST BLOCK FOR BENDS

| SIZE | 90° BEND A | 90° BEND B | 90° BEND C | S.F. BEARING SURFACE | 45° BEND A | 45° BEND B | 45° BEND C | S.F. BEARING SURFACE | 22-1/2° BEND A | 22-1/2° BEND B | 22-1/2° BEND C | S.F. BEARING SURFACE | 11-1/4° BEND A | 11-1/4° BEND B | 11-1/4° BEND C | S.F. BEARING SURFACE |
|---|---|---|---|---|---|---|---|---|---|---|---|---|---|---|---|---|
| 4" | 16" | 16" | 18" | 1.78 | 14" | 16" | 18" | 1.56 | 14" | 16" | 18" | 1.56 | 14" | 16" | 18" | 1.56 |
| 6" | 22" | 32" | 18" | 4.89 | 16" | 18" | 18" | 2.00 | 14" | 16" | 18" | 1.56 | 14" | 16" | 18" | 1.56 |
| 8" | 32" | 36" | 18" | 8.00 | 24" | 28" | 18" | 4.67 | 16" | 18" | 18" | 2.00 | 14" | 16" | 18" | 1.56 |
| 10" | 36" | 46" | 18" | 11.50 | 26" | 36" | 18" | 6.50 | 20" | 24" | 18" | 3.33 | 14" | 18" | 18" | 1.75 |
| 12" | 44" | 56" | 24" | 17.11 | 32" | 40" | 24" | 8.89 | 24" | 30" | 24" | 5.00 | 16" | 20" | 24" | 2.22 |
| 14" | 52" | 62" | 24" | 22.39 | 36" | 48" | 24" | 12.00 | 26" | 36" | 24" | 6.50 | 20" | 24" | 24" | 3.33 |
| 16" | 58" | 72" | 24" | 29.00 | 40" | 54" | 24" | 15.00 | 32" | 38" | 24" | 8.44 | 22" | 26" | 24" | 3.97 |
| 18" | 64" | 80" | 24" | 35.56 | 46" | 60" | 24" | 19.17 | 36" | 42" | 24" | 10.50 | 24" | 32" | 24" | 5.33 |
| 20" | 72" | 88" | 24" | 44.00 | 52" | 66" | 24" | 23.83 | 38" | 48" | 24" | 12.67 | 26" | 36" | 24" | 6.50 |
| 24" | 96" | 96" | 24" | 36.89 | 64" | 78" | 24" | 34.67 | 46" | 56" | 24" | 17.89 | 32" | 40" | 24" | 8.89 |
| 30" | 122" | 102" | 24" | 86.11 | 72" | 94" | 24" | 47.00 | 56" | 62" | 24" | 24.11 | 36" | 48" | 24" | 12.00 |
| 36" | 166" | 104" | 24" | 123.33 | 88" | 108" | 24" | 66.00 | 64" | 78" | 24" | 34.67 | 44" | 54" | 24" | 16.50 |

# THRUST BLOCK SIZE CHART

JANUARY 2020 PLATE S-45

DETAIL C
NTS

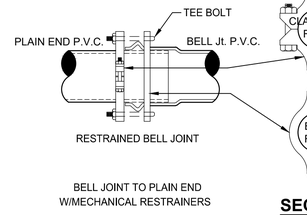


**SECTION**

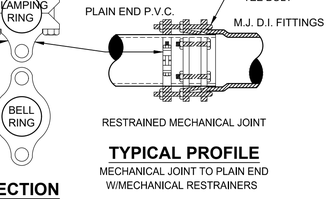


**TYPICAL PROFILE**

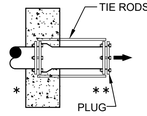


NO. OF TIE RODS REQUIRED

- 3" - 8" DIAMETER MAIN - 2 TIE RODS REQUIRED PER JOINT (3/4" ROD)
- 10" - 12" DIAMETER MAIN - 4 TIE RODS REQUIRED PER JOINT (3/4" ROD)
- 14" - 16" DIAMETER MAIN - 6 TIE RODS REQUIRED PER JOINT (3/4" ROD)
- 18" - 20" DIAMETER MAIN - 8 TIE RODS REQUIRED PER JOINT (3/4" ROD)
- 24" DIAMETER MAIN - 12 TIE RODS REQUIRED PER JOINT (3/4" ROD)
- 30" - 36" DIAMETER MAIN - 14 TIE RODS REQUIRED PER JOINT (1" ROD)
- 42" - 48" DIAMETER MAIN - 16 TIE RODS REQUIRED PER JOINT (1 1/4" ROD)
- 54" DIAMETER MAIN - 18 TIE RODS REQUIRED PER JOINT (1 1/4" ROD)

**DEAD - END THRUST COLLAR ANCHOR**

TO BE USED INSTEAD OF TOTAL RESTRAINED LENGTH (OPTIONAL) SIZE AS PER THRUST BLOCK DETAIL (W-38). SEE DETAILS W-36 & W-37.

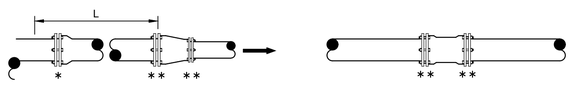


**MECHANICAL JOINT SLEEVES**

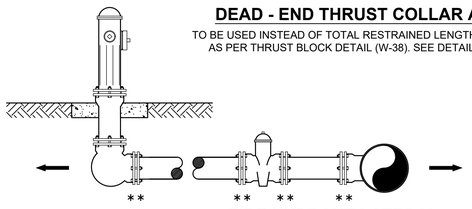


**FIRE HYDRANT LATERAL**

GENERAL NOTE:

1. PAY ITEM " * " DENOTES A RESTRAINT WHICH IS PAID FOR ON A PER EACH BASIS.
2. PAY ITEM " ** " DENOTES A RESTRAINT WHICH IS INCLUDED IN THE UNIT PRICE BID FOR FITTING OR VALVE.
3. ⟶ INDICATES DIRECTION OF THRUST FORCE.

# MECHANICAL RESTRAINT DETAILS - I

JANUARY 2020 PLATE W-31C

DETAIL D
NTS

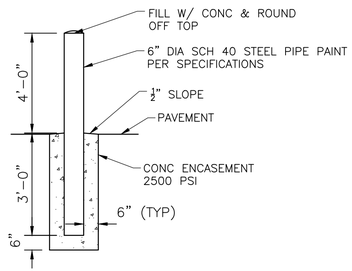


BOLLARD POST

DETAIL E
NTS

| REV. NO. | DATE | DRWN | CHKD | REMARKS |
|---|---|---|---|---|

DESIGNED BY: X
DRAWN BY: A. NUNES
SHEET CHK'D BY: X
CROSS CHK'D BY: X
APPROVED BY: X
DATE: FEBRUARY 2020

CDM Smith
4651 Salisbury Road, Suite 420
Jacksonville, FL 32256
Tel: (904) 731-7109
FL COA No. EB-0000020

JEA

WILSON BLVD. (180-45) AND 118th ST. (180-47)
MASTER PUMP STATION IMPROVEMENTS

JEA STANDARD DETAILS

DATE:
JONATHAN Z GOLDMAN
PE NO. 0048925

PROJECT NO. 6103-234169
FILE NAME: CD04DETL.DWG

SHEET NO.
CD-4

60% SUBMITTAL - NOT FOR CONSTRUCTION

XREFs: [CDMS_2234] Images: []
Last saved by: NUNESAL Time: 2/18/2020 1:02:52 PM
pw:\\cdmsmith-cg02-pw.bentley.com:PW_XM1\6103\234169 JEA PDB\04 Design Services NM_60%\02 Civil\10 CADD\CD04DETL.dwg
© 2020 CDM SMITH ALL RIGHTS RESERVED
REUSE OF DOCUMENTS: THESE DOCUMENTS AND DESIGNS PROVIDED BY PROFESSIONAL SERVICE, INCORPORATED HEREIN, ARE THE PROPERTY OF CDM SMITH AND ARE NOT TO BE USED, IN WHOLE OR PART, FOR ANY OTHER PROJECT WITHOUT THE WRITTEN AUTHORIZATION OF CDM SMITH.

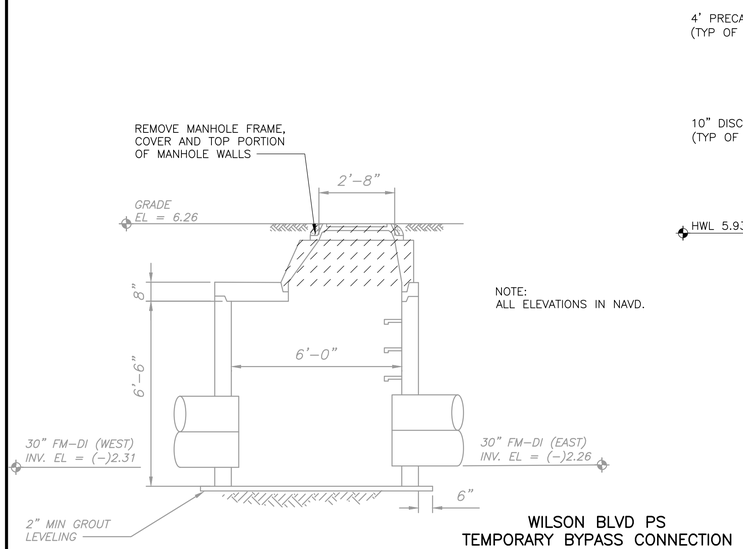


NOTE:
ALL ELEVATIONS IN NAVD.

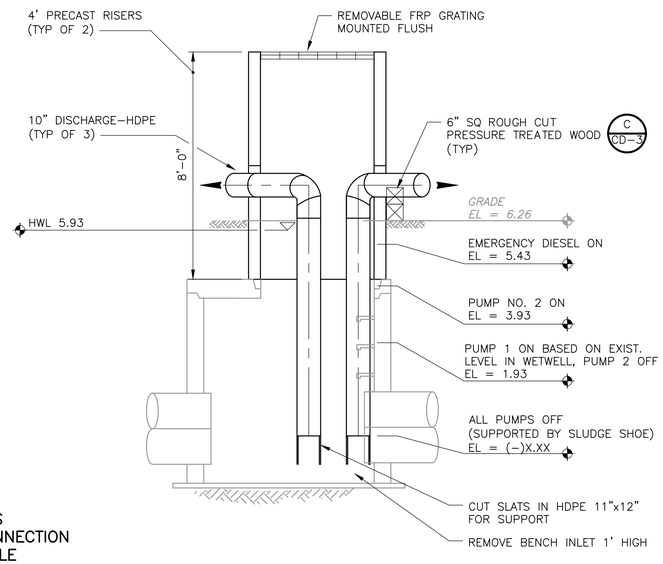


## WILSON BLVD PS
## TEMPORARY BYPASS CONNECTION TO EXIST. MANHOLE

**DETAIL A** — 3/8" = 1'-0" — C-7

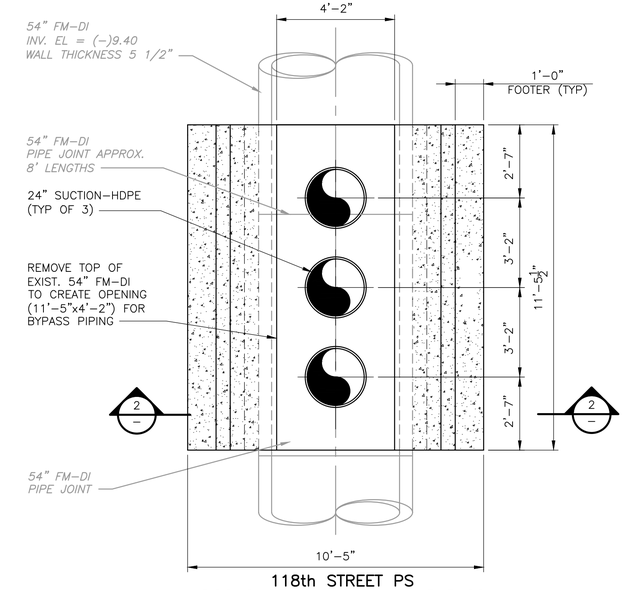


## 118th STREET PS
## DOGHOUSE MANHOLE WITH BYPASS

**DETAIL C** — 3/8" = 1'-0" — C-11

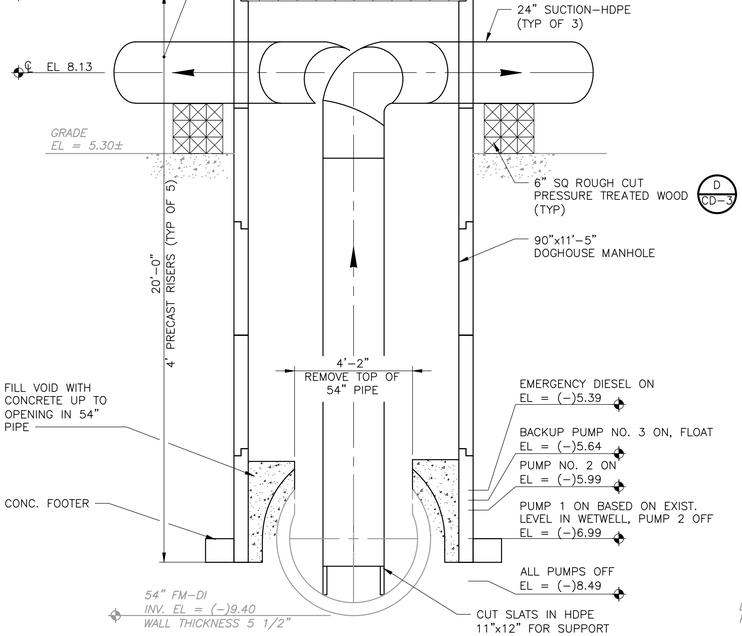


## 118th STREET PS
## DOGHOUSE MANHOLE WITH BYPASS

**SECTION 2** — 3/8" = 1'-0" — CD-5

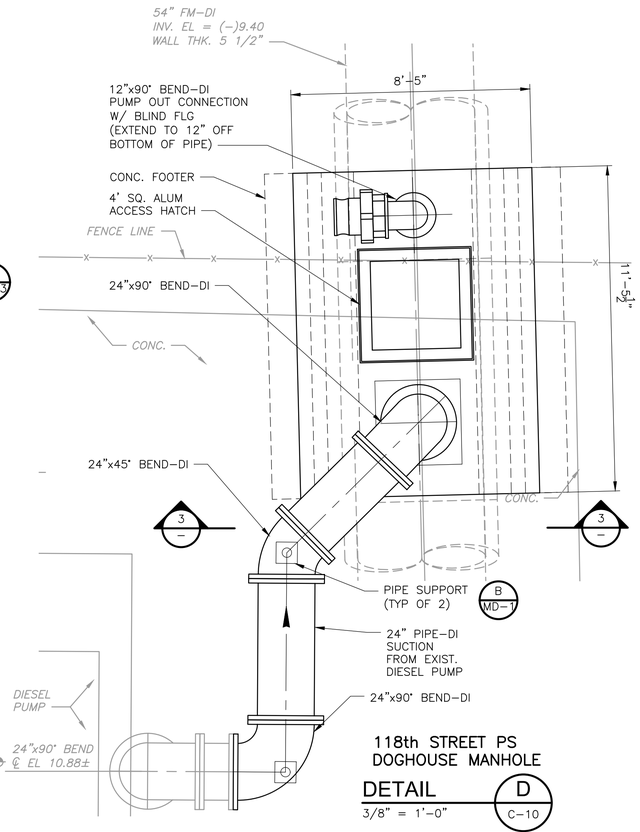


## 118th STREET PS
## DOGHOUSE MANHOLE

**DETAIL D** — 3/8" = 1'-0" — C-10

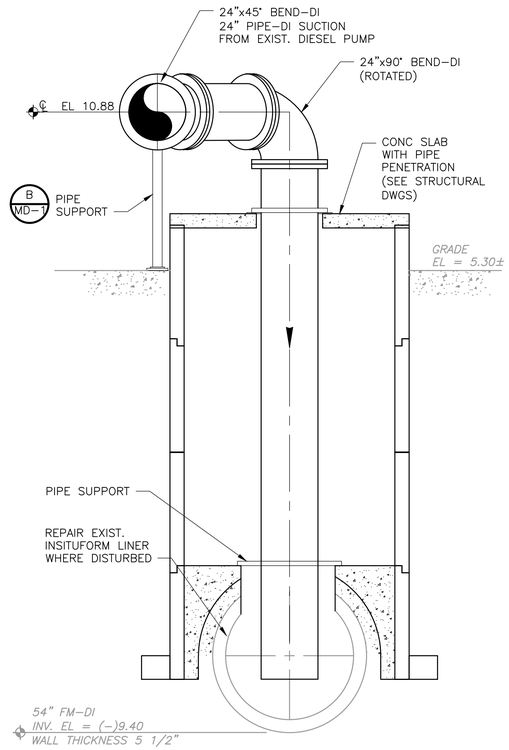


## 118th STREET PS
## DOGHOUSE MANHOLE

**SECTION 3** — 3/8" = 1'-0" — -

DATE:
JONATHAN Z GOLDMAN
PE NO. 0048925

| REV. NO. | DATE | DRWN | CHKD | REMARKS |
|---|---|---|---|---|

DESIGNED BY: X
DRAWN BY: A. NUNES
SHEET CHK'D BY: X
CROSS CHK'D BY: X
APPROVED BY: X
DATE: FEBRUARY 2020

CDM Smith
4651 Salisbury Road, Suite 420
Jacksonville, FL 32256
Tel: (904) 731-7109
FL COA No. EB-0000020

JEA

WILSON BLVD. (180-45) AND 118th ST. (180-47)
MASTER PUMP STATION IMPROVEMENTS

CIVIL DETAILS

PROJECT NO. 6103-234169
FILE NAME: CD05DETL.DWG

SHEET NO.
CD-5

60% SUBMITTAL - NOT FOR CONSTRUCTION

XREFs: [CDMS_2234, CEP001SS, CWZ003ST] Images: []
Last saved by: NUNESAL Time: 2/19/2020 12:17:38 PM
pw:\\cdmsmith-uz02-pw.bentley.com:PW_XM\{6103\2341169 JEA PDB\04 Design Services NM_60%\02 Civil\10 CADD\CD05DETL.dwg
© 2020 CDM SMITH ALL RIGHTS RESERVED
REUSE OF DOCUMENTS: THESE DOCUMENTS AND DESIGNS PROVIDED BY PROFESSIONAL SERVICE, INCORPORATED HEREIN, ARE THE PROPERTY OF CDM SMITH AND ARE NOT TO BE USED, IN WHOLE OR PART, FOR ANY OTHER PROJECT WITHOUT THE WRITTEN AUTHORIZATION OF CDM SMITH.

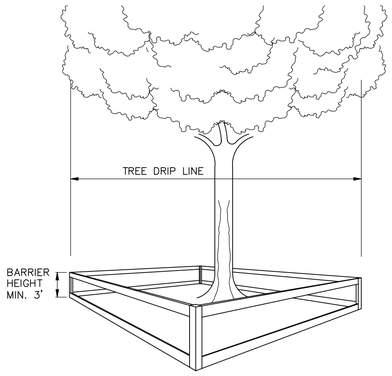


## TREE PROTECTION BARRICADE SPECIFICATIONS:

1. CONTRACTOR TO COMPLY WITH ALL LOCAL TREE ORDINANCES IN ADDITION TO THE SPECIFICATIONS NOTED BELOW.
2. FOUR CORNER UPRIGHT STAKES OF NO LESS THAN 2" X 2" LUMBER CONNECTED BY HORIZONTAL MEMBERS OF NO LESS THAN 1" X 4" LUMBER; OR UPRIGHT STAKES SPACED AT 4–5' INTERVALS OF NO LESS 2" X 2" LUMBER CONNECTED BY TWINE FLAGGED WITH PLASTIC SURVEYING TAPE AT REGULAR INTERVALS.
3. REQUIRED BARRICADES AND FLAGGING SHALL BE ERECTED BY THE CONTRACTOR AND APPROVED BY THE ENGINEER PRIOR TO COMMENCEMENT OF LAND ALTERATION ACTIVITIES. BARRICADES SHALL REMAIN IN PLACE UNTIL ALTERATION AND CONSTRUCTION ACTIVITIES ARE COMPLETED.

   DURING LAND ALTERATION AND CONSTRUCTION ACTIVITIES, IT SHALL BE UNLAWFUL TO REMOVE VEGETATION BY GRUBBING OR TO PLACE SOIL DEPOSITS, DEBRIS, SOLVENTS, CONSTRUCTION MATERIAL, MACHINERY OR OTHER EQUIPMENT OF ANY KIND WITHIN THE DRIPLINE OF A TREE TO REMAIN ON THE SITE UNLESS OTHERWISE APPROVED BY THE ENGINEER.

   LAND ALTERATION ACTIVITIES SHALL NOT UNNECESSARILY REMOVE EXISTING VEGETATION AND ALTER EXISTING TOPOGRAPHY.

TREE PROTECTION BARRICADE

DETAIL A

NTS



1. THE SOCK SHALL BE CONSTRUCTED OF PHOTODEGRADABLE OR BIODEGRADABLE MESH NETTING SUFFICIENT TO PROVIDE A MINIMUM SERVICE LIFE OF 3 MONTHS.
2. THE MEDIA WITHIN THE SOCK SHALL CONSIST OF RUBBER OR COMPOSTED MATERIAL CAPABLE OF REMOVING SOLIDS FROM RUNOFF.
3. ALL FILTER SOCK SHALL MEET THE CRITERIA SET FORTH IN THE FDEP FLORIDA STORMWATER EROSION AND SEDIMENTATION CONTROL MANUAL, AND BE MANUFACTURED BY ULTRA TECH INTERNATIONAL MODEL 9457 OR APPROVED EQUAL.

FILTER SOCK DETAIL

DETAIL B

NTS

## NOTES:

### EROSION CONTROL

IT IS THE CONTRACTORS RESPONSIBILITY TO IMPLEMENT THE EROSION AND TURBIDITY CONTROLS AS SHOWN ON THE PLANS. IT IS ALSO THE CONTRACTORS RESPONSIBILITY TO ENSURE THESE CONTROLS ARE PROPERLY INSTALLED, MAINTAINED AND FUNCTIONING PROPERLY TO PREVENT TURBID OR POLLUTED WATER FROM LEAVING THE PROJECT SITE. THE CONTRACTOR WILL ADJUST THE EROSION AND TURBIDITY CONTROLS SHOWN ON THE PLANS AND ADD ADDITIONAL CONTROL MEASURES, AS REQUIRED,TO ENSURE THE SITE MEETS ALL FEDERAL, STATE AND LOCAL EROSION AND TURBIDITY CONTROL REQUIREMENTS. THE FOLLOWING BEST MANAGEMENT PRACTICES WILL BE IMPLEMENTED BY THE CONTRACTOR AS REQUIRED BY THE PLANS AND AS REQUIRED BY THE REGULATORY AGENCIES.

1. SEDIMENT BASINS AND TRAPS, PERIMETER DITCHES, SEDIMENT BARRIERS AND OTHER MEASURES INTENDED TO TRAP SEDIMENT SHALL BE CONSTRUCTED AS A FIRST STEP BEFORE ANY LAND–DISTURBING TAKES PLACE.
2. ALL SEDIMENT CONTROL MEASURES ARE TO BE ADJUSTED TO MEET FIELD CONDITIONS AT THE TIME OF CONSTRUCTION AND BE CONSTRUCTED PRIOR TO ANY GRADING OR DISTURBANCE OF EXISTING SURFACE MATERIAL ON BALANCE OF SITE. PERIMETER SEDIMENT BARRIERS SHALL BE CONSTRUCTED TO PREVENT SEDIMENT OR TRASH FROM FLOWING OR FLOATING ON TO ADJACENT PROPERTIES.
3. DURING CONSTRUCTION OF THE PROJECT SOIL STOCKPILES SHALL BE STABILIZED OR PROTECTED WITH SEDIMENT TRAPPING MEASURES. THE CONTRACTOR IS RESPONSIBLE FOR THE TEMPORARY PROTECTIONS AND PERMANENT STABILIZATION OF ALL SOIL STOCKPILES ON SITE AS WELL AS SOIL INTENTIONALLY TRANSPORTED FROM THE PROJECT SITE.
4. AFTER ANY SIGNIFICANT RAINFALL EVENT ≥ 0.5 INCHES SEDIMENT CONTROL STRUCTURES WILL BE INSPECTED FOR INTEGRITY. ANY DAMAGED DEVICES SHALL BE REPAIRED IMMEDIATELY.
5. CONCENTRATED RUNOFF SHALL NOT FLOW DOWN CUT OR FILL SLOPES UNLESS CONTAINED WITHIN AN ADEQUATE TEMPORARY OR PERMANENT CHANNEL, FLUME, OR SLOPE DRAIN STRUCTURE.
6. WHENEVER WATER SEEPS FROM A SLOPE FACE ADEQUATE DRAINAGE OR OTHER PROTECTION SHALL BE PROVIDED.
7. SEDIMENT WILL BE PREVENTED FROM ENTERING ANY STORM DRAIN SYSTEM, DITCH, OR CHANNEL. ALL STORM SEWER INLETS THAT ARE MADE OPERABLE DURING CONSTRUCTION SHALL BE PROTECTED SO THAT SEDIMENT–LADEN WATER CANNOT ENTER THE CONVEYANCE SYSTEM WITHOUT FIRST BEING FILTERED OR OTHERWISE TREATED TO REMOVE SEDIMENT. GRATE INLETS AND CURB INLETS SHALL BE PROTECTED TO PREVENT THE INFLOW OF SEDIMENT.
8. BEFORE TEMPORARY OR NEWLY CONSTRUCTED STORMWATER CONVEYANCE CHANNELS ARE MADE OPERATIONAL, ADEQUATE OUTLET PROTECTION AND ANY REQUIRED TEMPORARY OR PERMANENT CHANNEL LINING SHALL BE INSTALLED IN BOTH THE CONVEYANCE CHANNEL AND RECEIVING CHANNEL.
9. WORK IN A LIVE WATER COURSE IS NOT ANTICIPATED AND MUST BE APPROVED BY THE ENGINEER AND ALL APPLICABLE REGULATORY AGENCIES. IN THE EVENT THAT WORK IN A LIVE WATERCOURSE IS PERFORMED, PRECAUTIONS SHALL BE TAKEN TO MINIMIZE ENRICHMENT. CONTROL SEDIMENT TRANSPORT AND STABILIZE THE WORK AREA TO THE GREATEST EXTENT POSSIBLE DURING CONSTRUCTION. NONERODIBLE MATERIAL SHALL BE USED FOR THE CONSTRUCTION OF CAUSEWAYS AND COFFERDAMS. EARTHEN FILL MAY BE USED FOR THESE STRUCTURES IF ARMORED BY NONERODIBLE COVER MATERIALS.
10. STOCKPILING MATERIAL: NO EXCAVATED MATERIAL SHALL BE STOCKPILED IN SUCH A MANNER AS TO DIRECT RUNOFF DIRECTLY OFF THE PROJECT SITE INTO ANY ADJACENT WATER BODY OR STORM WATER COLLECTION FACILITY.
11. EXPOSED AREA LIMITATION: THE SURFACE AREA OF OPEN, RAW ERODIBLE SOIL EXPOSED BY CLEARING AND GRUBBING OPERATIONS OR EXCAVATION AND FILLING OPERATIONS SHALL NOT EXCEED 1 ACRE. IF THE TOTAL AREA TO BE CLEARED IS EQUAL TO, OR EXCEEDS ONE (1) ACRE, THEN THE CONTRACTOR WILL BE RESPONSIBLE FOR PREPARING A STORMWATER POLLUTION PREVENTION PLAN (SWPPP) IN ACCORDANCE WITH EPA'S NPDES REGULATIONS. THE CONTRACTOR WILL BE RESPONSIBLE FOR SUBMITTING A NOTICE ON INTENT (NOI) TO EPA FORTY–EIGHT (48) HOURS PRIOR TO COMMENCING CONSTRUCTION. IF REQUIRED THE COST FOR ALL WORK AND MATERIALS NECESSARY FOR THE PREPARATION, MODIFICATION, AND SUBMITTAL OF THE SWPPP AND IMPLEMENTATION DURING CONSTRUCTION SHALL BE INCLUDED IN THE CONTRACTORS BASE BID AND NO ADDITIONAL COMPENSATION SHALL BE ALLOWED.
12. TEMPORARY SEEDING: AREAS OPENED BY CONSTRUCTION OPERATIONS AND THAT ARE NOT ANTICIPATED TO BE RE–EXCAVATED OR DRESSED AND RECEIVE FINAL GRASSING TREATMENT WITHIN 30 DAYS SHALL BE SEEDED WITH A QUICK GROWING GRASS SPECIES WHICH WILL PROVIDE AN EARLY COVER DURING THE SEASON IN WHICH IT IS PLANTED AND WILL NOT LATER COMPETE WITH THE PERMANENT GRASSING.
13. TEMPORARY SEEDING AND MULCHING: SLOPES STEEPER THAN 6:1 THAT FALL WITHIN THE CATEGORY ESTABLISHED IN PARAGRAPH 12 ABOVE SHALL RECEIVE A LOOSE MEASURE OF MULCH MATERIAL CUT INTO THE SOIL OF THE SEEDED AREA ADEQUATE TO PREVENT MOVEMENT OF SEED AND MULCH.
14. TEMPORARY GRASSING: THE SEEDED OR SEEDED AND MULCHED AREA(S) SHALL BE ROLLED AND WATERED OR HYDROMULCHED OR OTHER SUITABLE METHODS IF REQUIRED TO ASSURE OPTIMUM GROWING CONDITIONS FOR THE ESTABLISHMENT OF A GOOD GRASS COVER. TEMPORARY GRASSING SHALL BE THE SAME MIX & AMOUNT REQUIRED FOR PERMANENT GRASSING IN THE CONTRACT SPECIFICATIONS.
15. TEMPORARY REGRASSING : IF, AFTER 14 DAYS FROM SEEDING, THE TEMPORARY GRASSED AREAS HAVE NOT ATTAINED A MINIMUM OF 75 PERCENT GOOD GRASS COVER, THE AREA WILL BE REWORKED AND ADDITIONAL SEED APPLIED SUFFICIENT TO ESTABLISH THE DESIRED VEGETATIVE COVER.
16. MAINTENANCE: ALL FEATURES OF THE PROJECT DESIGNED AND CONSTRUCTED TO PREVENT EROSION AND SEDIMENT SHALL BE MAINTAINED DURING THE LIFE OF THE CONSTRUCTION SO AS TO FUNCTION AS THEY WERE ORIGINALLY DESIGNED AND CONSTRUCTED.
17. PERMANENT EROSION CONTROL: THE EROSION CONTROL FACILITIES OF THE PROJECT SHOULD BE DESIGNED TO MINIMIZE THE IMPACT ON THE OFFSITE FACILITIES.
18. PERMANENT SEEDING: ALL AREAS WHICH HAVE BEEN DISTURBED BY CONSTRUCTION WILL, AS A MINIMUM, BE SEEDED. THE SEEDING MIX MUST PROVIDE BOTH LONG–TERM VEGETATION AND RAPID GROWTH SEASONAL VEGETATION. SLOPES STEEPER THAN 4:1 SHALL BE SEEDED AND MULCHED OR SODDED.
19. ALL SLOPES STEEPER THAN 3:1 SHALL BE SODDED WITH STAKED SOD.
20. THE CONTRACTOR IS RESPONSIBLE FOR REMOVING SILT FROM SITE IF NOT REUSABLE ON–SITE AND ASSURING PLAN ALIGNMENT AND GRADE IN ALL DITCHES AND SWALES AT COMPLETION OF CONSTRUCTION.
21. THE SITE CONTRACTOR IS RESPONSIBLE FOR REMOVING THE TEMPORARY EROSION AND SEDIMENT CONTROL DEVICES AFTER COMPLETION OF CONSTRUCTION AND ONLY WHEN AREAS HAVE BEEN STABILIZED AND FINAL ACCEPTANCE FROM ENGINEER HAS BEEN RECEIVED.
22. CONTRACTOR SHALL INSURE THAT ALL DRAINAGE STRUCTURES, PIPES, ETC. ARE CLEANED OUT AND WORKING PROPERLY AT TIME OF ACCEPTANCE.
23. WIRE MESH SHALL BE LAID OVER THE DROP INLET SO THAT THE WIRE EXTENDS A MINIMUM OF 1 FOOT BEYOND EACH SIDE OF THE INLET STRUCTURE. HARDWARE CLOTH OR COMPARABLE WIRE MESH WITH 1/2–INCH OPENINGS SHALL BE USED. IF MORE THAN ONE STRIP OF MESH IS NECESSARY, THE STRIPS SHALL BE OVERLAPPED.
24. FDOT NO. 1 COARSE AGGREGATE SHALL BE PLACED OVER THE WIRE MESH AS INDICATED IN THE DETAIL FOR A GRAVEL INLET SEDIMENT TRAP. THE DEPTH OF STONE SHALL BE AT LEAST 12 INCHES OVER THE ENTIRE INLET OPENING. THE STONE SHALL EXTEND BEYOND THE INLET OPENING AT LEAST 18 INCHES ON ALL SIDES.
25. IF THE STONE FILTER BECOMES CLOGGED WITH SEDIMENT SO THAT IT NO LONGER ADEQUATELY PERFORMS ITS FUNCTION, THE STONES MUST BE PULLED AWAY FROM THE INLET, CLEANED AND REPLACED.
26. BALES SHALL BE EITHER WIRE–BOUND OR STRING–TIED WITH THE BINDINGS ORIENTED AROUND THE SIDES RATHER THAN OVER AND UNDER THE BALES.
27. BALES SHALL BE PLACED LENGTHWISE IN A SINGLE ROW SURROUNDING THE INLET, WITH THE ENDS OF ADJACENT BALES PRESSED TOGETHER.
28. THE FILTER BARRIER SHALL BE ENTRENCHED AND BACKFILLED. A TRENCH SHALL BE EXCAVATED TO A MINIMUM DEPTH OF 8 INCHES. AFTER THE BALES ARE STAKED, THE EXCAVATED SOIL SHALL BE BACKFILLED AND COMPACTED AGAINST THE FILTER BARRIER.
29. EACH BALE SHALL BE SECURELY ANCHORED AND HELD IN PLACE BY AT LEAST TWO STAKES OR REBARS DRIVEN THROUGH THE BALE.
30. LOOSE STRAW SHOULD BE WEDGED BETWEEN BALES TO PREVENT WATER FROM ENTERING BETWEEN BALES.
31. STRAW BALE BARRIERS SHALL BE INSPECTED IMMEDIATELY AFTER EACH RAINFALL AND AT LEAST DAILY DURING PROLONGED RAINFALL.
32. CLOSE ATTENTION SHALL BE PAID TO THE REPAIR OF DAMAGED BALES, END RUNS AND UNDERCUTTING BENEATH BALES AND NECESSARY REPAIRS TO BARRIERS OR REPLACEMENT OF BALES SHALL BE ACCOMPLISHED PROMPTLY. ANY SEDIMENT DEPOSITS REMAINING IN PLACE AFTER THE EROSION AND SEDIMENT CONTROLS ARE NO LONGER REQUIRED SHALL BE DRESSED TO CONFORM TO THE EXISTING GRADE, PREPARED AND SEEDED.
33. SHOULD THE FABRIC ON A SILT FENCE OR FILTER BARRIER DECOMPOSE OR BECOME INEFFECTIVE PRIOR TO THE END OF THE EXPECTED USABLE LIFE AND THE BARRIER STILL BE NECESSARY, THE FABRIC SHALL BE REPLACED PROMPTLY.
34. SEDIMENT DEPOSITS SHOULD BE REMOVED FROM ALL EROSION AND SEDIMENT CONTROLS AFTER EACH STORM EVENT. THEY MUST BE REMOVED WHEN DEPOSITS REACH APPROXIMATELY ONE–THIRD THE HEIGHT OF THE BARRIER.
35. SEDIMENT SHALL BE REMOVED FROM INLEY SEDIMENT TRAPS AND THE TRAP RESTORED TO ITS ORIGINAL DIMENSIONS WHEN THE SEDIMENT HAS ACCUMULATED TO 1/3 THE DESIGN DEPTH OF THE TRAP. REMOVED SEDIMENT SHALL BEDEPOSITED IN A SUITABLE AREA AND IN SUCH A MANNER THAT IT WILL NOT ERODE.
36. SOD SHALL BE PLACED AS DIRECTED BY THE ENGINEER IN AREAS WHICH MAY REQUIRE IMMEDIATE EROSION PROTECTION TO ENSURE WATER QUALITY STANDARDS ARE MAINTAINED.
37. IF REQUIRED, A DEWATERING PLAN SHALL BE SUBMITTED TO THE ENGINEER FOR APPROVAL PRIOR TO ANY DEWATERING. DEWATERING PUMPS SHALL NOT EXCEED THE CAPACITY OF THAT WHICH REQUIRES A CONSUMPTIVE USE PERMIT (CUP) FROM THE ST. JOHNS RIVER WATER MANAGEMENT DISTRICT. IF REQUIRED, IT IS THE RESPONSIBILITY OF THE CONTRACTOR TO OBTAIN THE PERMIT. THE APPLICATION FOR THE CUP SHALL BE SUBMITTED TO THE ENGINEER FOR APPROVAL PRIOR TO THE REGULATORY AGENCY.
38. IN THE EVENT THAT A CONSUMPTIVE USE PERMIT (CUP) IS REQUIRED THE COST OF PREPARATION, SUBMITTAL, AND COMPLIANCE SHALL BE PART OF THE CONTRACT AT NO ADDITIONAL COST TO THE OWNER.
39. ANY DISCHARGE FROM DEWATERING ACTIVITY SHALL BE FILTERED AND CONVEYED TO THE OUTFALL IN A MANNER WHICH PREVENTS EROSION AND TRANSPORTATION OF SUSPENDED SOLIDS TO THE RECEIVING OUTFALL.
40. THIS PLAN INDICATES THE MINIMUM EROSION AND SEDIMENT MEASURES REQUIRED FOR THIS PROJECT. THE CONTRACTOR IS RESPONSIBLE FOR MEETING ALL APPLICABLE RULES, REGULATIONS AND WATER QUALITY GUIDELINES AND MAY NEED TO INSTALL ADDITIONAL CONTROLS.
41. THE CONTRACTOR SHALL BE REQUIRED TO RESPOND TO ALL WATER MANAGEMENT DISTRICT INQUIRIES RELATIVE TO COMPLIANCE OF EROSION AND SEDIMENTATION CONTROL. THE COST OF THIS COMPLIANCE SHALL BE PART OF THE CONTRACT.

DATE:
JONATHAN Z GOLDMAN
PE NO. 0048925

| REV. NO. | DATE | DRWN | CHKD | REMARKS |
|---|---|---|---|---|

DESIGNED BY: X
DRAWN BY: A. NUNES
SHEET CHK'D BY: X
CROSS CHK'D BY: X
APPROVED BY: X
DATE: FEBRUARY 2020

CDM Smith
4651 Salisbury Road, Suite 420
Jacksonville, FL 32256
Tel: (904) 731-7109
FL COA No. EB-0000020

JEA

WILSON BLVD. (180-45) AND 118th ST. (180-47)
MASTER PUMP STATION IMPROVEMENTS

STORMWATER POLLUTION PREVENTION DETAILS

PROJECT NO. 6103–234169
FILE NAME: CD06DETL.DWG

SHEET NO.
CD-6

60% SUBMITTAL - NOT FOR CONSTRUCTION

XREFs: [CDMS_2436] Images: []
Last saved by: NUNESAL Time: 2/18/2020 12:48:53 PM
pw:\\cdmsmith-az02-pw.bentley.com:PW_XM1\6103\234169 JEA PDB\04 Design Services NM_60%\02 Civil\10 CADD\CD06DETL.DWG
©2020 CDM SMITH ALL RIGHTS RESERVED.
REUSE OF DOCUMENTS: THESE DOCUMENTS AND DESIGNS PROVIDED BY PROFESSIONAL SERVICE, INCORPORATED HEREIN, ARE THE PROPERTY OF CDM SMITH AND ARE NOT TO BE USED, IN WHOLE OR PART, FOR ANY OTHER PROJECT WITHOUT THE WRITTEN AUTHORIZATION OF CDM SMITH.

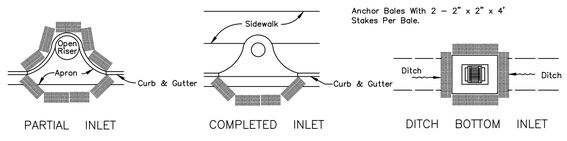


## PROTECTION AROUND INLETS OR SIMILAR STRUCTURES

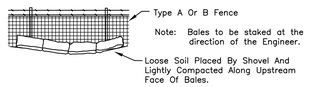


## BALES BACKED BY FENCE

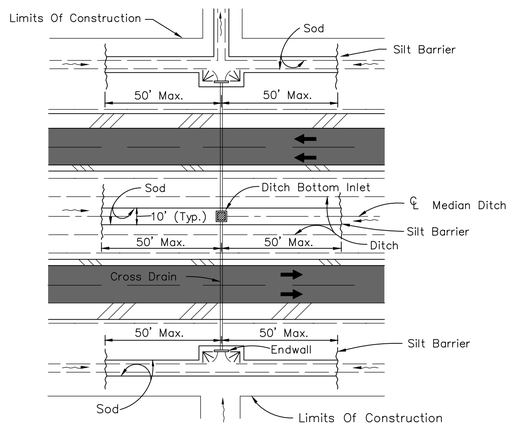


## DITCH INSTALLATIONS AT DRAINAGE STRUCTURES

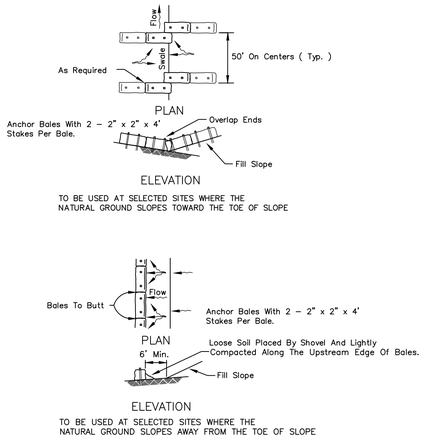


## BARRIERS FOR FILL SLOPES

## FDOT TYPE I SYNTHETIC FIBER BALE LOCATION

DETAIL A
N.T.S.

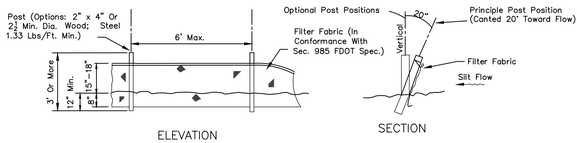


## TYPE III SILT FENCE

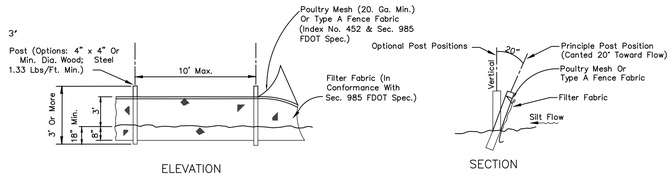


Note: Silt Fence to be paid for under the contract lump sum price for Erosion and Sediment Control.

## TYPE IV SILT FENCE

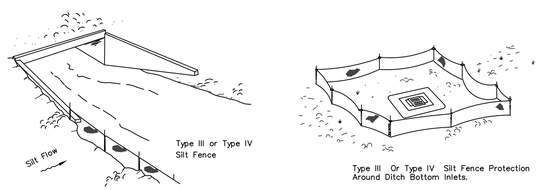


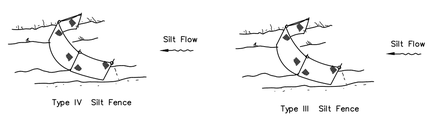


Note: Spacing for Type III & TYPE IV Fence to be in accordance with Chart 1, Sheet 1 of 3, FDOT Index No. 102 and ditch installations at drainage structures Sheet 2 of 3, FDOT Index No. 102.

Do not deploy in a manner that silt fences will act as a dam across permanent flowing watercourses. Silt fences are to be used at upland locations and turbidity barriers used at permanent bodies of water.

## SILT FENCE APPLICATIONS

## SILT FENCE TYPE III & IV

DETAIL C
N.T.S.

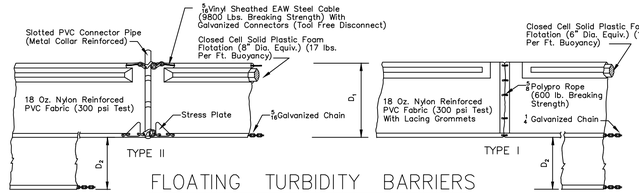


## FLOATING TURBIDITY BARRIERS

NOTICE:
COMPONENTS OF TYPES I & TYPE II MAY BE SIMILAR OR IDENTICAL TO PROPRIETARY DESIGNS. ANY INFRINGEMENT ON THE PROPRIETARY RIGHTS OF THE DESIGNER SHALL BE THE SOLE RESPONSIBILITY OF THE USER. SUBSTITUTIONS FOR TYPES I AND II SHALL BE AS APPROVED BY THE ENGINEER.

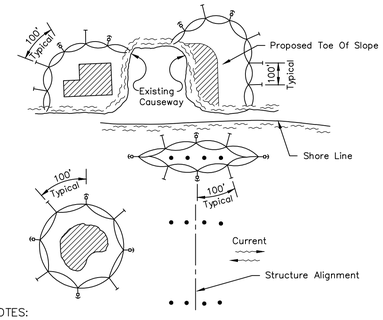


LEGEND
- Pile Locations
- Dredge Or Fill Area
- Mooring Buoy w/Anchor
- Anchor
- Barrier Movement Due To Current Action

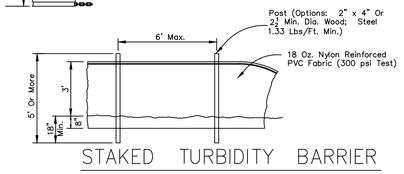


## STAKED TURBIDITY BARRIER

NOTES:
1. Turbidity barriers are to be used in all permanent bodies of water regardless of water depth.
2. Number and spacing of anchors dependent on current velocities.
3. Deployment of barrier around pile locations may vary to accommodate construction operations.
4. Navigation may require segmenting barrier during construction operations.
5. For additional information see Section 104 of the FDOT Standard Specifications.

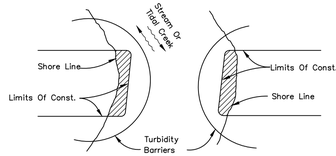


Note:
Turbidity barriers for flowing streams and tidal creeks may be either floating, or staked types or any combinations of types that will suit site conditions and meet erosion control and water quality requirements. The barrier type(s) will be at the Contractors option unless otherwise specified in the plans, however payment will be under the contract lump sum price established in the bid proposal for Erosion & Sediment Control Posts in staked turbidity barriers to be installed in vertical position unless otherwise directed by the Engineer.

## TURBIDITY BARRIER APPLICATIONS

## TURBIDITY BARRIERS

DETAIL B
N.T.S.

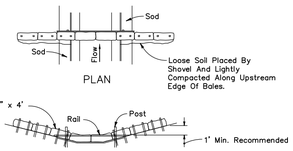


Spacing: Bale barriers for paved ditches should be spaced in accordance with Chart J, Sheet 1 of 3, Index No. 102

## BARRIER FOR PAVED DITCH

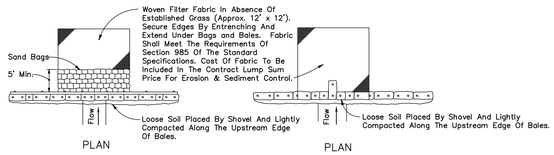


Application and Spacing: The use of Types I & II bale barriers should be limited to the conditions outlined in Chart I, Sheet 1 of 3, Index No. 102

TYPE II TYPE I

## BARRIER FOR UNPAVED DITCHES

## SYNTHETIC FIBER BALE BARRIER TYPE I & II

DETAIL D
N.T.S.

NOTE:
WHERE FDOT SPECS AND INDEX ARE REFERENCED, PLEASE REFER TO FDOT ROADWAY & TRAFFIC DESIGN STANDARDS, AND FDOT STANDARD SPECIFICATIONS FOR ROAD & BRIDGE CONSTRUCTION.

DATE:
JONATHAN Z GOLDMAN
PE NO. 0048925

| REV. NO. | DATE | DRWN | CHKD | REMARKS |
|---|---|---|---|---|

DESIGNED BY: X
DRAWN BY: A. NUNES
SHEET CHK'D BY: X
CROSS CHK'D BY: X
APPROVED BY: X
DATE: FEBRUARY 2020

CDM Smith
4651 Salisbury Road, Suite 420
Jacksonville, FL 32256
Tel: (904) 731-7109
FL COA No. EB-0000020

JEA

WILSON BLVD. (180-45) AND 118th ST. (180-47)
MASTER PUMP STATION IMPROVEMENTS

STORMWATER POLLUTION PREVENTION DETAILS

PROJECT NO. 6103-234169
FILE NAME: CD07DETL.DWG

SHEET NO.
CD-7

60% SUBMITTAL - NOT FOR CONSTRUCTION

XREFs: [CDMS_2436] Images: []
Last saved by: NUNESAL Time: 2/18/2020 12:46:56 PM
pw:\\cdmsmith-azo2-pw.bentley.com:PW_XM1\6103\234169 JEA PDB\04 Design Services NM_60%\02 Civil\10 CADD\CD07DETL.DWG
©2020 CDM SMITH ALL RIGHTS RESERVED.
REUSE OF DOCUMENTS: THESE DOCUMENTS AND DESIGNS PROVIDED BY PROFESSIONAL SERVICE, INCORPORATED HEREIN, ARE THE PROPERTY OF CDM SMITH AND ARE NOT TO BE USED, IN WHOLE OR PART, FOR ANY OTHER PROJECT WITHOUT THE WRITTEN AUTHORIZATION OF CDM SMITH.

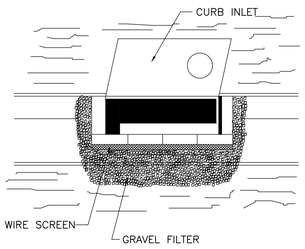


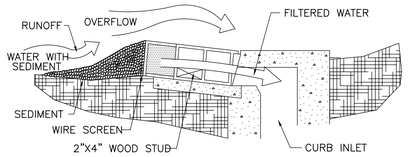


SPECIFIC APPLICATION

THIS METHOD OF INLET PROTECTION IS APPLICABLE AT CURB INLETS WHERE AN OVERFLOW CAPABILITY IS NECESSARY TO PREVENT EXCESSIVE PONDING IN FRONT OF THE STRUCTURE.

## BLOCK & GRAVEL CURB INLET SEDIMENT FILTER

DETAIL A
N.T.S.

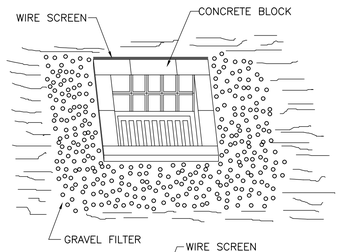


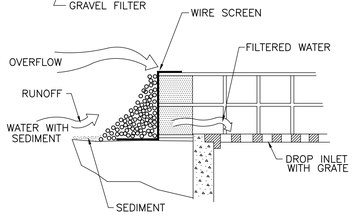


SPECIFIC APPLICATION

THIS METHOD OF INLET PROTECTION IS APPLICABLE WHERE HEAVY FLOWS ARE EXPECTED AND WHERE AN OVERFLOW CAPACITY IS NECESSARY TO PREVENT EXCESSIVE PONDING AROUND THE STRUCTURE.

## BLOCK & GRAVEL DROP INLET SEDIMENT FILTER

DETAIL B
N.T.S.

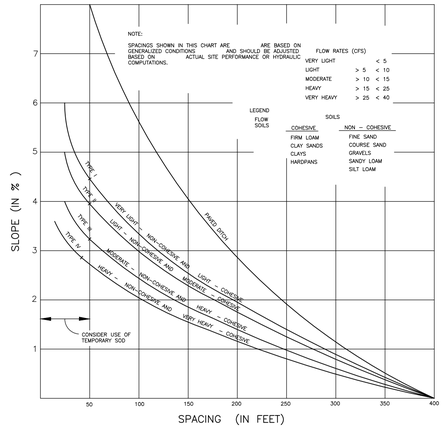


CHART I

RECOMMENDED SPACING FOR TYPE I AND TYPE II HAY BALE BARRIERS, AND TYPE III AND TYPE IV SILT FENCES AND PAVED DITCH HAY BALE BARRIERS

## SPACING RECOMMENDATION FOR SILT FENCES & SYNTHETIC FIBER BALES

DETAIL C
N.T.S.

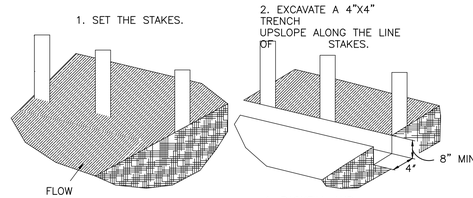


CONSTRUCTION OF A FILTER BARRIER

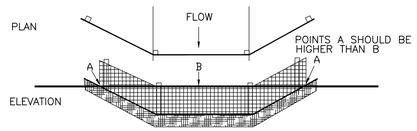


PROPER PLACEMENT OF A FILTER BARRIER IN A DRAINAGE WAY

## FILTER BARRIER CONSTRUCTION DETAIL

DETAIL D
N.T.S.

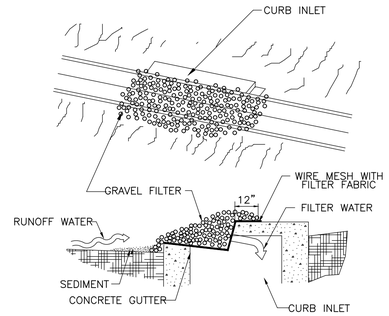


GRAVEL CURB INLET SEDIMENT FILTER

SPECIFIC APPLICATION

THIS METHOD OF INLET PROTECTION IS APPLICABLE AT CURB INLETS WHERE PONDING IN FRONT OF THE STRUCTURE IS NOT LIKELY TO CAUSE INCONVENIENCE OR DAMAGE TO ADJACENT STRUCTURES AND UNPROTECTED AREAS.

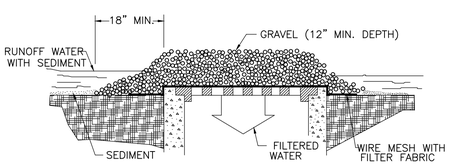


GRAVEL AND WIRE MESH DROP INLET SEDIMENT FILTER

SPECIFIC APPLICATION

THIS METHOD OF INLET PROTECTION IS APPLICABLE WHERE HEAVY CONCEN– TRATED FLOWS ARE EXPECTED, BUT NOT WHERE PONDING AROUND THE STRUCTURE MIGHT CAUSE EXCESSIVE INCONVENIENCE OR DAMAGE TO ADJACENT STRUCTURES AND UNPROTECTED AREAS.

## GRAVEL INLET SEDIMENT TRAP

DETAIL E
N.T.S.

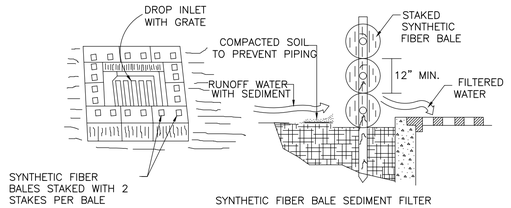


SYNTHETIC FIBER BALE SEDIMENT FILTER

SPECIFIC APPLICATION

THIS METHOD OF INLET PROTECTION IS APPLICABLE WHERE THE INLET DRAINS A RELATIVELY FLAT AREA (SLOPES NO GREATER THAN 5 PERCENT) WHERE SHEET OR OVERLAND FLOWS (NOT EXCEEDING 0.5 cfs) ARE TYPICAL. THE METHOD SHALL NOT APPLY TO INLETS RECEIVING CONCENTRATED FLOWS, SUCH AS IN STREET OR HIGHWAY MEDIANS.

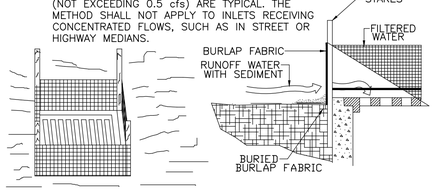


FABRIC SEDIMENT FILTER

SPECIFIC APPLICATION

THIS METHOD OF INLET PROTECTION IS APPLICABLE WHERE THE INLET DRAINS A RELATIVELY FLAT AREA (SLOPES NO GREATER THAN 5 PERCENT) WHERE SHEET OR OVERLAND FLOWS (NOT EXCEEDING 0.5 cfs) ARE TYPICAL. THE METHOD SHALL NOT APPLY TO INLETS RECEIVING CONCENTRATED FLOWS. SUCH AS IN STREET OR HIGHWAY MEDIANS.

## DROP INLET SEDIMENT TRAP

DETAIL F
N.T.S.

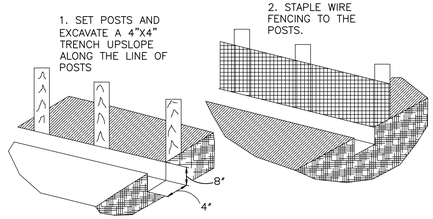


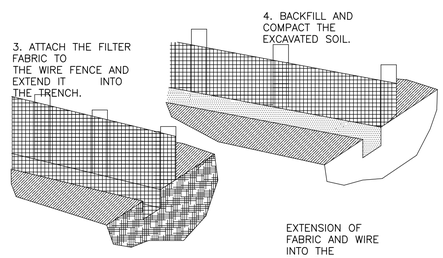


## CONSTRUCTION DETAILS FOR SILT FENCES

DETAIL G
N.T.S.




## STAKED SYNTHETIC FIBER BALE

N.T.S.

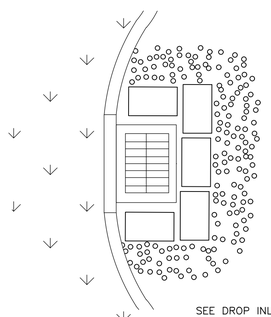


## ERECT SEDIMENT BARRIERS AT CATCH BASINS

DETAIL H
N.T.S.

DATE:
JONATHAN Z GOLDMAN
PE NO. 0048925

| REV. NO. | DATE | DRWN | CHKD | REMARKS |
|---|---|---|---|---|

DESIGNED BY: X
DRAWN BY: A. NUNES
SHEET CHK'D BY: X
CROSS CHK'D BY: X
APPROVED BY: X
DATE: FEBRUARY 2020

CDM Smith
4651 Salisbury Road, Suite 420
Jacksonville, FL 32256
Tel: (904) 731-7109
FL COA No. EB-0000020

JEA

WILSON BLVD. (180-45) AND 118th ST. (180-47)
MASTER PUMP STATION IMPROVEMENTS

STORMWATER POLLUTION PREVENTION DETAILS

PROJECT NO. 6103–234169
FILE NAME: CD08DETL.DWG

SHEET NO.
CD-8

60% SUBMITTAL - NOT FOR CONSTRUCTION

XREFs: [CDMS_2436] Images: []
Last saved by: NUNESAL Time: 2/18/2020 12:46:05 PM
pw:\\cdmsmith-az02-pw.bentley.com:PW_XM1\6103\234169 JEA PDB\04 Design Services NM_60%\02 Civil\10 CADD\CD08DETL.DWG
© 2020 CDM SMITH ALL RIGHTS RESERVED
REUSE OF DOCUMENTS: THESE DOCUMENTS AND DESIGNS PROVIDED BY PROFESSIONAL SERVICE, INCORPORATED HEREIN, ARE THE PROPERTY OF CDM SMITH AND ARE NOT TO BE USED, IN WHOLE OR PART, FOR ANY OTHER PROJECT WITHOUT THE WRITTEN AUTHORIZATION OF CDM SMITH.

## ABBREVIATIONS

| | | | | | |
|---|---|---|---|---|---|
| & | AND | GB | GLASS BLOCK | REF | ROOF EXHAUST FAN |
| < | ANGLE | GRT | GRATING | REINF | REINFORCE (D, ING) |
| @ | AT | GYP | GYPSUM | REQ'D | REQUIRED |
| AB | ANCHOR BOLT | GWB | GYPSUM WALL BOARD | REV | REVISED |
| ABV | ABOVE | HARD | HARDENER | RF | ROOF FAN |
| ACMU | ACOUSTICAL CONCRETE MASONRY UNIT | HD | HEAVY DUTY | RFG | ROOFING |
| AFF | ABOVE FINISHED FLOOR | HDWD | HARDWOOD | RGH | ROUGH |
| AFG | ABOVE FINISHED GRADE | HDWR | HARDWARE | RJ | REVEAL/RUSTICATION JOINT |
| AL, ALUM | ALUMINUM | HGR | HANGER | RL | RAIN LEADER |
| AMP | ACOUSTICAL METAL PANELS | HGT | HEIGHT | RLG | RAILING |
| ANOD | ANODIZE(D) | HM | HOLLOW METAL | RM | ROOM |
| ASSY | ASSEMBLY | HOR | HORIZONTAL | RO | ROUGH OPENING |
| BBT | BIOBASED TILE | HP | HIGH POINT | RT | RUBBER TILE |
| BD | BOARD | HR | HANDRAIL | RWL | RAIN WATER LEADER |
| BEV | BEVEL(ED) | IN | INCH | S | STEEL S-SHAPED DESIGNATION |
| BLDG | BUILDING | INST | INSTRUMENTATION | SAT | SUSPENDED ACOUSTICAL TILE |
| BLK | BLOCK | INSUL | ISULATION | SB | SEAMLESS BASE |
| BLKG | BLOCKING | JC | JANITOR'S CLOSET | SCHD | SCHEDULE |
| BRG | BEARING | JT | JOINT | SCRN | SCREEN(ED, ING) |
| BRK | BRICK | JT FLR | JOINT FILLER | SECT | SECTION |
| BRS | BRASS | L | LINE OF STRUCTURAL ANGLE DESIGNATION | SF | SEAMLESS FLOORING |
| BRZ | BRONZE | LAB | LABORATORY | SGFT | STRUCTURAL GLAZED FACING TILE |
| BTM | BOTTOM | LAD | LADDER | SHT | SHEET |
| C TO C | CENTER TO CENTER | LAM | LAMINIATED | SIM | SIMILAR |
| CAB | CABINET | LAV | LAVATORY | SK | SINK |
| CEM | CEMENT | LG | LAMINATED GLASS | SL | SLOPE |
| CF | COMPRESSIBLE FILLER | LINO | LINOLEUM | SLNT | SEALANT |
| CGFB | CEMENTITIOUS GLASS FIBER BOARD | LKR | LOCKER | SPEC | SPECIFICATION, SPECIFIED |
| CH | CONCRETE HARDENER | LNTL | LINTEL | SST | STAINLESS STEEL |
| CHAM | CHAMFER | LP | LOW POINT | STD | STANDARD |
| CHAN | CHANNEL | LT | LIGHT(S) | STL | STEEL |
| CIP | CAST IN PLACE | MAS | MASONRY | STOR | STORAGE |
| CJ | CONTROL JOINT | MATL | MATERIAL | STRU | STRUCTURE(S, URAL) |
| CL OR | CENTERLINE | MAX | MAXIMUM | STWY | STAIRWAY |
| CLG | CEILING | MEMB | MEMBRANE | SUPT | SUPERINTENDENT |
| CLKG | CAULKING | MFR | MANUFACTURER | SUSP | SUSPENDED |
| CMU | CONCRETE MASONRY UNIT | MIN | MINIMUM | T | TREAD(S) |
| COL | COLUMN | MISC | MISCELLANEOUS | TBM | TRAFFIC BEARING MEMBRANE |
| COMP | COMPRESSIBLE | MO | MASONRY OPENING | T&G | TONGUE AND GROOVE |
| CONC | CONCRETE | MR | MOISTURE RESISTANT | TEMP | TEMPERATURE |
| CONT | CONTINUOUS | MRAT | MOISTURE RESISTANT ACOUSTICAL TILE | TEMP | TEMPERED |
| CRPT | CARPET, CARPET TILE | MTD | MOUNTED | TEMP | TEMPORARY |
| CRS | COURSE(S) | MTG | MOUNTING | TER | TERRAZZO |
| CT | CERAMIC TILE | MTL | METAL | TERB | TERRAZZO BASE |
| CET | DETAIL | NIC | NOT IN CONTRACT | THK | THICK(NESS) |
| DF | DRINKING FOUNTAIN | NOM | MONINAL | THR | THRESHOLD |
| DIA | DIAMETER | NTS | NOT TO SCALE | TKBD | TACKBOARD |
| DIAG | DIAGONAL | OC | ON CENTER | TOB | TOP OF BRICK |
| DIM | DIMENSION | OH | OVERHANG | TOC | TOP OF CONCRETE |
| DISP | DISPENSER | OPNG | OPENING | TOIL | TOILET |
| DN | DOWN | OPP HD | OPPOSITE HAND | TOM | TOP OF MASONRY |
| DP | DAMPPROOFING | ORD | OVERFLOW ROOF DRAIN | TOPG | TOPPING |
| DR | DRAIN | OSB | ORIENTED STRAND BOARD | TOS | TOP OF STEEL |
| ELEC | ELECTRICAL | OV | OVER | TS | STRUCTURAL TUBING (STEEL UNLESS NOTED) |
| ELEV | ELEVATION | OVHD | OVERHEAD | TSL | TOP OF SLAB |
| EQ | EQUAL(LY) | PERIM | PERIMETER | TWF | THROUGH WALL FLASHING |
| EQPT | EQUIPMENT | PL | PLATE | TYP | TYPICAL |
| EWC | ELECTRICAL WATER COOLER | PL | PROPERTY LINE | UC | UNDERCUT |
| EXP | EXPOSED | PLAS | PLASTER | UON | UNLESS OTHERWISE NOTED |
| EJ | EXPANSION JOINT | PLK | PLANK | UR | URINAL |
| EXIST, (E) | EXISTING | PLYWD | PLYWOOD | VB | VAPOR BARRIER |
| FD | FLOOR DRAIN | PM | PRESSED METAL | VCT | VINYL COMPOSITE TILE |
| FE | FIRE EXTINGUISHER | PR | PAIR | VERT | VERTICAL |
| FF | FACTORY FINISH | PRD | PROMENADE ROOF DRAIN | VEST | VESTIBULE |
| FGL | FIBERGLASS | PRCST | PRECAST | VTR | VENT THRU ROOF |
| FIN | FINISH(ED) | PREFAB | PRE-FABRICATED | W | WITH |
| FLG | FLASHING | PT | PREASSURE TREATED | W/ | WITH |
| FL | FLOOR(ING) | PRMLD | PREMOLDED | W/A | WHERE APPLICABLE |
| FLR | FILLER | PSF | POUNDS PER SQUARE FOOT | W/O | WITHOUT |
| FR | FRAME | PTD | PAINTED | WC | WATER CLOSET |
| FRP | FIBERGLASS REINFORCED PLASTIC | QT | QUARRY TILE | WD | WOOD |
| FO | FRAME OPENING | QTB | QUARRY TILE BASE | WDW | WINDOW |
| FV | FIELD VERIFY | R | RISER(S) | WF | WIDE FLANGE |
| FXD | FIXED | R+S | BACKER ROD & SEALANT | WPG | WATERPROOFING |
| GA | GAGE, GAUGE | RB | RUBBER BASE | WT | STEEL TEE-SHAPE DESIGNATION |
| GALV | GALVANIZED | RD | ROOF DRAIN | WWF | WELDED WIRE FABRIC |
| GL | GLASS | RECT | RECEPTACLE | | |

## GENERAL NOTES

HEIGHT OF INTERIOR STUD AND CMU PARTITIONS ARE FROM FLOOR TO THE UNDERSIDE OF ROOF DECK UNLESS OTHERWISE NOTED. PROVIDE DEFLECTION HEADS AT TOP OF WALL (TYPICAL).

NOT ALL EQUIPMENT IS SHOWN FOR CLARITY. REFER TO THE APPROPRIATE DISCIPLINE SHEETS FOR SPECIFIC EQUIPMENT LAYOUT AND OTHER REQUIREMENTS

SEE CIVIL SHEETS FOR SIDEWALK, ROAD PAVING AND FINISH GRADE ELEVATIONS.

SEE STRUCTURAL SHEETS FOR SIZE AND LOCATION OF CONCRETE PADS, TRENCHES, VAULTS, SUMPS, ETC

SEE STRUCTURAL SHEETS FOR CONCRETE AND MASONRY REINFORCEMENT

PATCH AND REPAIR ANY MATERIALS OR SURFACES DAMAGED DURING THE CONSTRUCTION PROCESS TO MATCH THE EXISTING ADJACENT SURFACES.

ALL ITEMS TO BE NEW UNLESS SPECIFICALLY NOTED OTHERWISE.

ALL JOINTS, VOIDS AND PENETRATIONS THROUGH FIRE-RATED WALL SYSTEMS ARE TO BE FILLED/SEALED WITH UL APPROVED FIRESAFING/FIRESTOPPING MATERIALS TO ACHIEVE THE REQUIRED FIRE-RATING (REFER TO CODE DRAWINGS FOR LOCATIONS).

DO NOT SCALE FROM THE DRAWINGS

NOTIFY ARCHITECT IF CONSTRUCTION DOCUMENTS DIFFER FROM ACTUAL FIELD CONDITIONS PRIOR TO FABRICATION OR NEW CONSTRUCTION

THIS DRAWING CONTAINS A GENERAL LIST OF SYMBOLS AND ABBREVIATIONS. NOT ALL ITEMS SHOWN HERE APPEAR ON THE CONTRACT DRAWINGS.

## MATERIAL SYMBOLS

- EARTH
- GRAVEL
- BRICK
- CONCRETE MASONRY UNIT (CMU)
- PRECAST CONCRETE
- CAST-IN-PLACE CONCRETE
- WOOD BLOCKING
- PLYWOOD
- RIGID INSULATION
- BLANKET INSULATION
- STEEL
- ALUMINUM
- STUCCO / GROUT
- CAULK

## LINE TYPES (UNLESS OTHERWISE NOTED)

- CONTINUOUS - NEW CONSTRUCTION
- DASHED ON CONSTRUCTION PLAN/SHEETS - HIDDEN ELEMENTS BEYOND, ABOVE OR BELOW

## DIMENSIONING SYSTEM

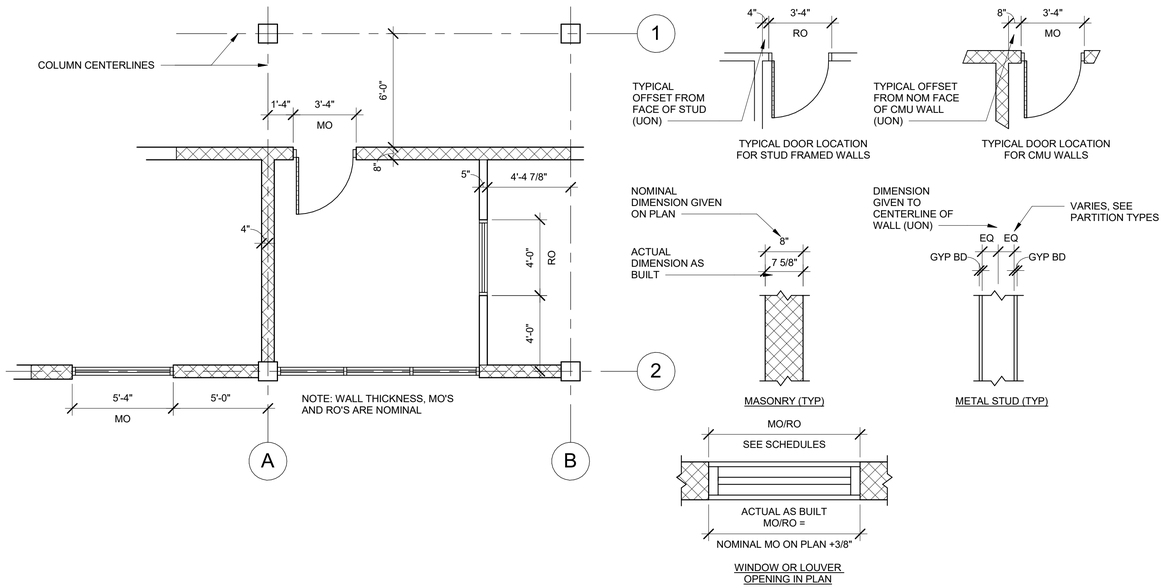


## OPENINGS

USUALLY LABELED IN PLAN VIEW; HOWEVER, OPENINGS NOT SHOWN IN PLAN ARE LABELED ON ELEVATIONS




## SYMBOLS

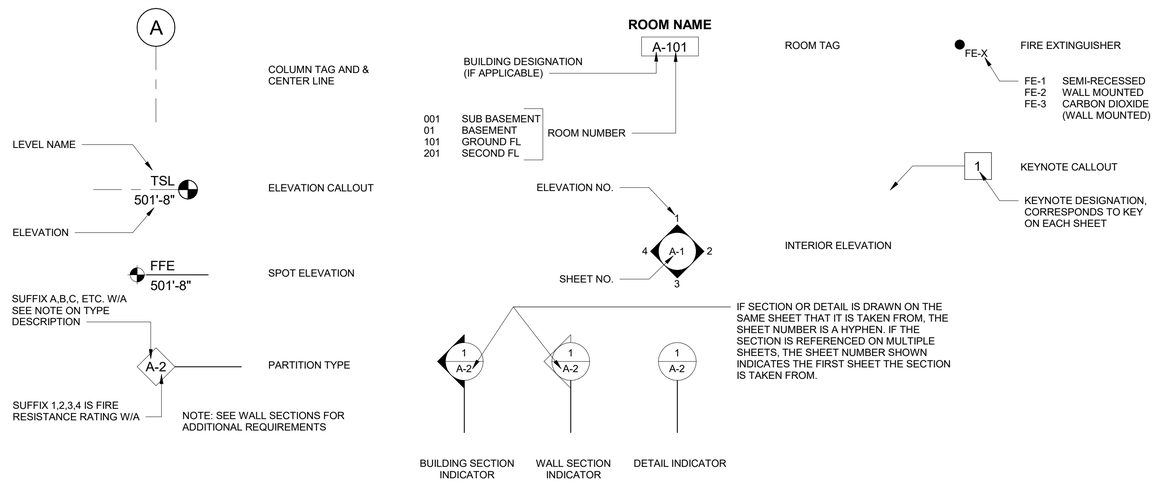



MICHAEL T. ALFORD , AIA
NO. AR92055
FL. CORP.ARCHITECTURE AA-002781
101 SOUTHHALL LANE, SUITE 200
MAITLAND, FL 32751


| REV. NO. | DATE | DRWN | CHKD | REMARKS |
|---|---|---|---|---|
| | | | | |

DESIGNED BY: G. HOBDY
DRAWN BY: G. HOBDY
SHEET CHK'D BY: M. ALFORD
CROSS CHK'D BY:
APPROVED BY: M. ALFORD
DATE: JANUARY 2020


CDM Smith
4651 Salisbury Road, Suite 420
Jacksonville, FL 32256
Tel: (904) 731-7109
FL COA No. EB-0000020


JEA

WILSON BLVD. (180-45) AND 118th ST. (180-47)
MASTER PUMP STATION IMPROVEMENTS

WILSON BLVD. & 118TH ST. MASTER PUMP STATIONS
ABBREVIATIONS
GENERAL NOTES AND
SYMBOLS LEGEND

PROJECT NO. 6103-234169
FILE NAME: AWZ002PS.RVT

SHEET NO.
A-1

60% SUBMITTAL - NOT FOR CONSTRUCTION


© 2019 CDM SMITH ALL RIGHTS RESERVED.
REUSE OF DOCUMENTS. THEESE DOCUMENTS AND DESIGNS PROVIDED BY PROFESSIONAL SERVICE, INCORPORATED HEREIN, ARE THE PROPERTY OF CDM SMITH AND ARE NOT TO BE USER, IN WHOLE OR PART, FOR ANY OTHER PROJECT WITHOUT THE WRITTEN AUTHORIZATION OF CDM SMITH.

## BUILDING CODE KEY DETERMINATIONS

| | | | | |
|---|---|---|---|---|
| CODES REVIEWED | FLORIDA BUILDING CODE, BUILDING SIXTH EDITION<br>FLORIDA BUILDING CODE, EXISTING BUILDING SIXTH EDITION<br>FLORIDA BUILDING CODE, ENERGY CONSERVATION SIXTH EDITION<br>FLORIDA FIRE PREVENTION CODE, SIXTH EDITION<br>FLORIDA ACCESSIBILITY CODE FOR BUILDING CONSTRUCTION, SIXTH EDITION | | | |
| <u>EXISTING PUMP STATION</u> | | | | |
| CLASSIFICATION OF WORK<br>SECTION 504 | LEVEL 2 ALTERATION<br>RECONFIGURATION OF SPACES, REPLACEMENT OF DOORS, INSTALLATION OF ADDITIONAL EQUIPMENT | | | |
| ACCESSIBILITY REQUIREMENTS<br>SECTION 203.5 | PUMP STATION FACILITIES AND ELECTRICAL AREAS FREQUENTED BY SERVICE PERSONNEL ONLY SHALL NOT BE REQUIRED TO COMPLY. | | | |
| BUILDING CLASSIFICATION<br>OCCUPANCY - SECTION 306<br>CONSTRUCTION - SECTION 602 | <br>EXISTING GROUP F-2 - NO CHANGE<br>EXISTING TYPE II-B (ASSUMED) - NO CHANGE | | | |
| BUILDING HEIGHT AND AREA | NO CHANGE IN BUILDING HEIGHT OR AREA | | | |
| OCCUPANT LOAD<br>SECTION 1004 | NO CHANGE<br>UPPER LEVEL = 341 SF/100 SF PER OCCUPANT = 3 OCCUPANTS | | | |
| EXITS PER SPACE<br>SECTION 1006 | REQUIRED | 1 | ACTUAL | 1 |
| MAX TRAVEL DISTANCE<br>TABLE 1017 | MAXIMUM 300 FT | | ACTUAL 25 FT | |
| SPRINKLERS REQUIRED | NO | PROVIDED: | NO | |

*OCCUPANT LOAD SHOWN IS FOR MEANS OF EGRESS CALCULATIONS. ACTUAL OCCUPANT LOAD IS 3 EMPLOYEES MAXIMUM FOR MAINTENENACE

## LIFE SAFETY LEGEND

- EXIT DISCHARGE
- AREA OR SPACE EXIT
- EXIT SIGN
- FE — FIRE EXTINGUISHER
- EGRESS PATH
- X — TRAVEL DISTANCE (FEET)

## BARRIER FREE MOUNTING HEIGHTS

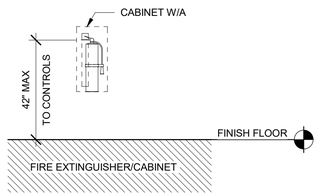


| CDMS FIRE EXTINGUISHER SCHEDULE | | | | |
|---|---|---|---|---|
| **TAG** | **QTY** | **MODEL** | **MANUFACTURER** | **DESCRIPTION** |
| FE-2 | 2 | COSMIC 10E UL RATED 4A-80BC | JL INDUSTRIES (ACTIVAR INC) | 10 LB DRY CHEMICAL, BRACKET MOUNTED |

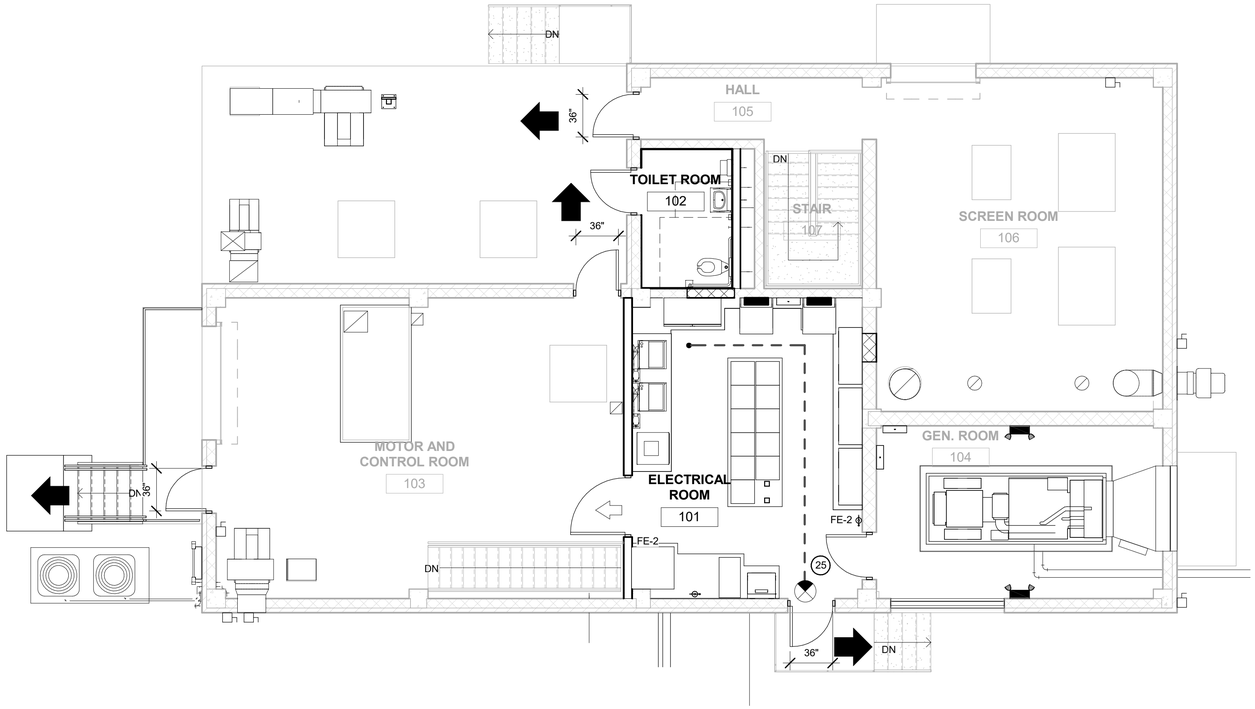


NEW WORK LIFE SAFETY PLAN

3/16" = 1'-0"

## GENERAL NOTES

1. SEE SHEET A-1 FOR ADDITIONAL GENERAL NOTES

© 2019 CDM SMITH ALL RIGHTS RESERVED.
REUSE OF DOCUMENTS: THESE DOCUMENTS AND DESIGNS PROVIDED BY PROFESSIONAL SERVICE, INCORPORATED HEREIN, ARE THE PROPERTY OF CDM SMITH AND ARE NOT TO BE USER, IN WHOLE OR PART, FOR ANY OTHER PROJECT WITHOUT THE WRITTEN AUTHORIZATION OF CDM SMITH.

| REV. NO. | DATE | DRWN | CHKD | REMARKS |
|---|---|---|---|---|
| | | | | |

DESIGNED BY: G. HOBDY
DRAWN BY: G. HOBDY
SHEET CHK'D BY: M. ALFORD
CROSS CHK'D BY:
APPROVED BY: M. ALFORD
DATE: JANUARY 2020

CDM Smith
4651 Salisbury Road, Suite 420
Jacksonville, FL 32256
Tel: (904) 731-7109
FL COA No. EB-0000020

JEA

WILSON BLVD. (180-45) AND 118th ST. (180-47)
MASTER PUMP STATION IMPROVEMENTS

WILSON BLVD. MASTER PUMP STATION
BUILDING CODE KEY DETERMINATIONS AND
LIFE SAFETY PLAN

MICHAEL T. ALFORD , AIA
NO. AR92055
FL. CORP ARCHITECTURE AA-002781
101 SOUTHHALL LANE, SUITE 200
MAITLAND, FL 32751

PROJECT NO. 6103-234169
FILE NAME: AWZ002PS.RVT

SHEET NO.
A-2

60% SUBMITTAL - NOT FOR CONSTRUCTION

© 2019 CDM SMITH ALL RIGHTS RESERVED.
REUSE OF DOCUMENTS: THESE DOCUMENTS AND DESIGNS PROVIDED BY PROFESSIONAL SERVICE, INCORPORATED HEREIN, ARE THE PROPERTY OF CDM SMITH AND ARE NOT TO BE USER, IN WHOLE OR PART, FOR ANY OTHER PROJECT WITHOUT THE WRITTEN AUTHORIZATION OF CDM SMITH.

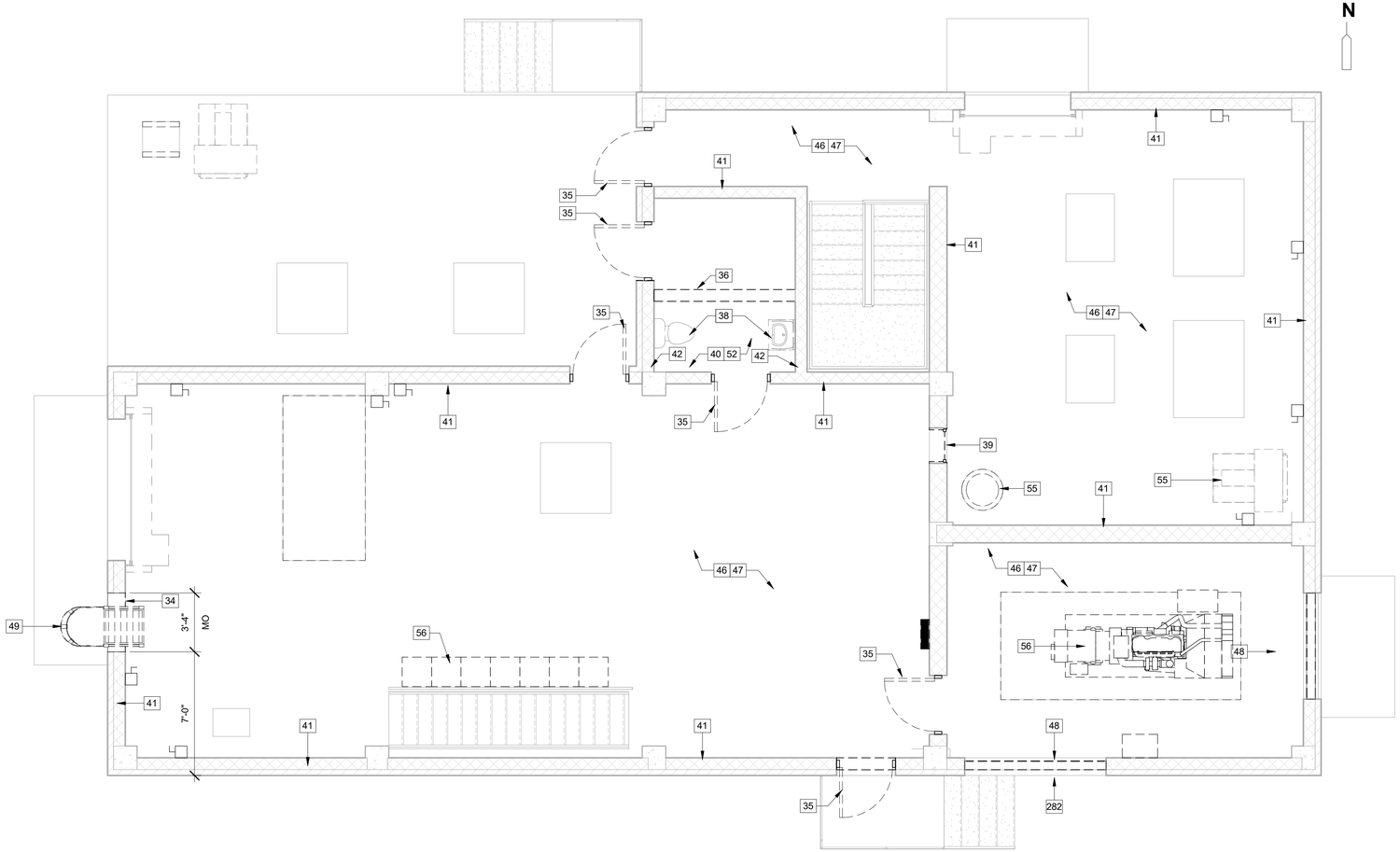


DEMOLITION PLAN - 1ST FLOOR
1/4" = 1'-0"

## GENERAL NOTES

1. SEE SHEET A-1 FOR ADDITIONAL GENERAL NOTES

| KEYNOTE LEGEND | |
|---|---|
| KEY VALUE | KEYNOTE TEXT |
| 34 | REMOVE AND PROPERLY DISPOSE OF PORTION OF EXISTING WALL |
| 35 | REMOVE EXISTING DOOR & FRAME AND ALL ASSOCIATED COMPONENTS |
| 36 | REMOVE EXISTING CMU WALL |
| 38 | REMOVE EXISTING RESTROOM FIXTURES |
| 39 | REMOVE EXISTING WINDOW AND ALL ASSOCIATED COMPONENTS |
| 40 | REMOVE AND PROPERLY DISPOSE OF SUSPENDED CEILING, SUSPENSION SYSTEM AND ALL ASSOCIATED COMPONENTS |
| 41 | CLEAN AND PREPARE WALL SURFACE ACCORDING TO COATING MANUFACTURE'S REQUIREMENT AND PAINT INTERIOR WALLS, TYP |
| 42 | REMOVE AND PROPERLY DISPOSE OF CERAMIC TILE AT TOILET ROOM WALLS. PREPARE WALLS FOR INSTALLATION OF NEW CERAMIC TILE |
| 46 | CLEAN AND PREPARE FLOOR SURFACE ACCORDING TO COATING MANUFACTURE'S REQUIREMENTS AND COAT FLOOR, TYP |
| 47 | CLEAN AND PREPARE CEILING SURFACE ACCORDING TO COATING MANUFACTURE'S REQUIREMENTS AND PAINT EXISTING CEILING, TYP |
| 48 | REMOVE AND PROPERLY DISPOSE OF LOUVER AND ALL ASSOCIATED COMPONENTS |
| 49 | REMOVE EXISTING ROOF ACESS LADDER AND CAGE AND ALL ASSOCIATED COMPONENTS |
| 52 | REMOVE AND PROPERLY DISPOSE OF CERAMIC TILE FLOOR AND PREPARE FLOOR FOR NEW TILE |
| 55 | EQUIPMEMT REMOVAL, SEE "H" DWGS |
| 56 | EQUIPMEMT REMOVAL, SEE "E" DWGS |
| 282 | REMOVE AND PROPERLY DISPOSE OF PORTION OF EXISTING WALL, ABOVE EXISTING OPENING |

MICHAEL T. ALFORD , AIA
NO. AR92055
FL. CORP ARCHITECTURE AA-002781
101 SOUTHHALL LANE, SUITE 200
MAITLAND, FL 32751

| REV. NO. | DATE | DRWN | CHKD | REMARKS |
|---|---|---|---|---|
| | | | | |

DESIGNED BY: E. MORALES
DRAWN BY: E. MORALES
SHEET CHK'D BY: M. ALFORD
CROSS CHK'D BY:
APPROVED BY: M. ALFORD
DATE: JANUARY 2020

CDM Smith
4651 Salisbury Road, Suite 420
Jacksonville, FL 32256
Tel: (904) 731-7109
FL COA No. EB-0000020

JEA

WILSON BLVD. (180-45) AND 118th ST. (180-47)
MASTER PUMP STATION IMPROVEMENTS

WILSON BLVD. MASTER PUMP STATION
UPPER LEVEL
DEMOLITION FLOOR PLAN

PROJECT NO. 6103-234169
FILE NAME: AWZ002PS.RVT
SHEET NO.
A-3

60% SUBMITTAL - NOT FOR CONSTRUCTION

© 2019 CDM SMITH ALL RIGHTS RESERVED.
REUSE OF DOCUMENTS: THESE DOCUMENTS AND DESIGNS PROVIDED BY PROFESSIONAL SERVICE, INCORPORATED HEREIN, ARE THE PROPERTY OF CDM SMITH AND ARE NOT TO BE USER, IN WHOLE OR PART, FOR ANY OTHER PROJECT WITHOUT THE WRITTEN AUTHORIZATION OF CDM SMITH.

## GENERAL NOTES

1. SEE SHEET A-1 FOR ADDITIONAL GENERAL NOTES

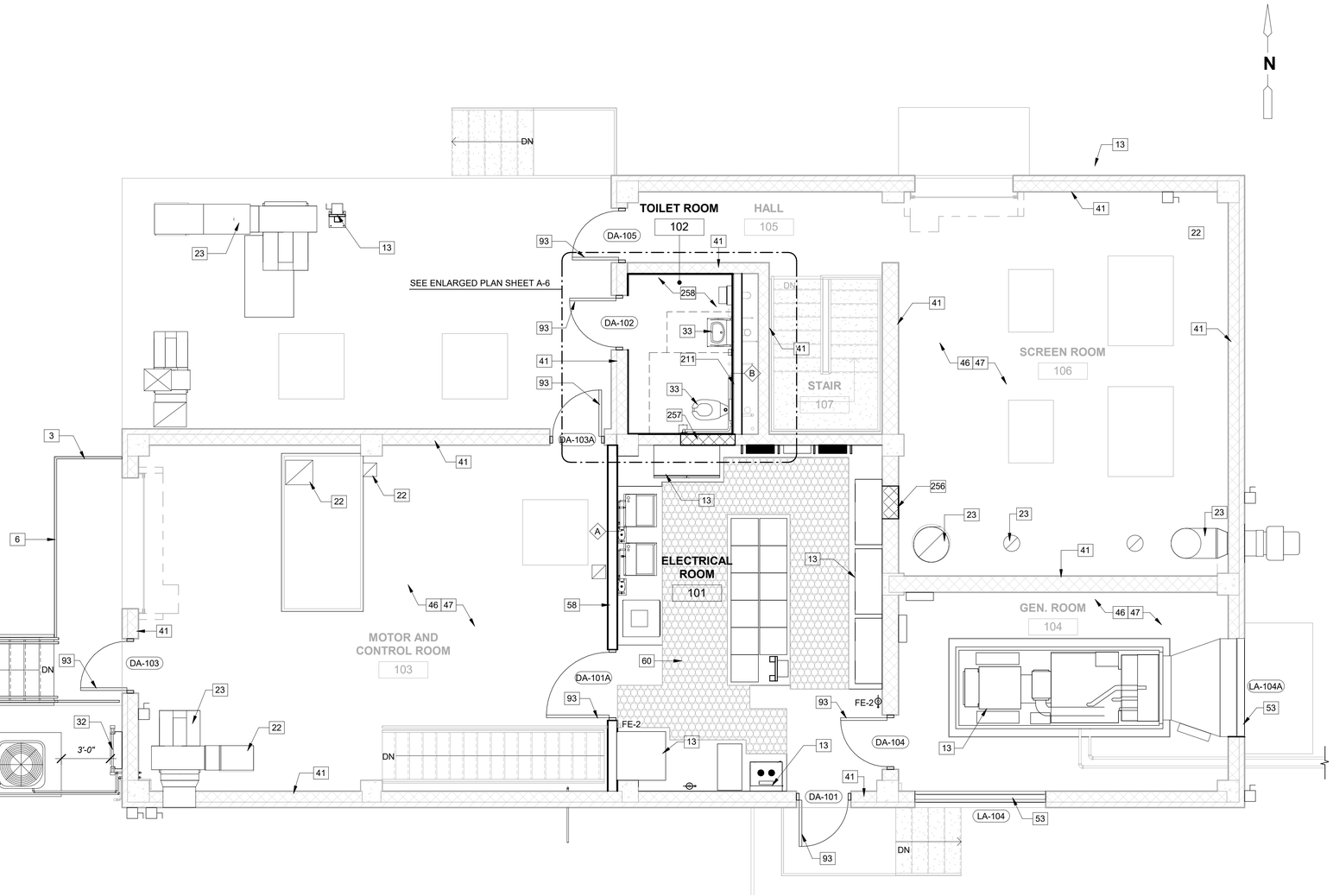


NEW WORK PLAN - 1ST FLOOR
1/4" = 1'-0"

| KEYNOTE LEGEND | |
|---|---|
| KEY VALUE | KEYNOTE TEXT |
| 1 | ALUMINUM STAIR WITH ALUMINUM GAURDRAIL AND HANDRAIL, SEE "S" DWGS |
| 2 | ALUMINUM GUARDRAIL WITH ALUMINUM HANDRAIL, TYP |
| 3 | ALUMINUM GUARDRAIL, TYP |
| 6 | NEW REMOVABLE ALUMINUM GUARDRAIL SECTION |
| 13 | ELEC EQUIP, SEE "E" DWGS |
| 22 | HVAC DUCTWORK, SEE "H" DWGS |
| 23 | HVAC EQUIPMENT, SEE "H" DWGS |
| 32 | NEW ROOF LADDER WITH FALL PROTECTION SYSTEM |
| 33 | NEW PLUMBING FIXTURES, SEE "P" DWGS |
| 41 | CLEAN AND PREPARE WALL SURFACE ACCORDING TO COATING MANUFACTURE'S REQUIREMENT AND PAINT INTERIOR WALLS, TYP |
| 46 | CLEAN AND PREPARE FLOOR SURFACE ACCORDING TO COATING MANUFACTURE'S REQUIREMENTS AND COAT FLOOR, TYP |
| 47 | CLEAN AND PREPARE CEILING SURFACE ACCORDING TO COATING MANUFACTURE'S REQUIREMENTS AND PAINT EXISTING CEILING, TYP |
| 53 | NEW DRAINABLE BLADE LOUVER, SEE "H" DWG |
| 58 | NEW METAL STUD WALL WITH ON TOP OF CONCRETE CURB WITH BATT INSULATION BETWEEN STUDS AND CEMENT BOARD FINISH |
| 60 | NEW RUBBER INSULATING FLOOR MAT, TYP |
| 93 | FRP DOOR AND ALUMINUM FRAME, SEE SCHED |
| 211 | PROVIDE ALL RESTROOM ACCESSORIES PER JEA STANDARDS |
| 256 | INFILL EXISTING WINDOW OPENING WITH CMU |
| 257 | INFILL EXISTING DOOR OPENING WITH CMU |
| 258 | INSTALL NEW FLOOR, WALL, AND CEILING RESTROOM FINISHES PER JEA STANDARDS |

MICHAEL T. ALFORD , AIA
NO. AR92055
FL. CORP ARCHITECTURE AA-002781
101 SOUTHHALL LANE, SUITE 200
MAITLAND, FL 32751

| REV. NO. | DATE | DRWN | CHKD | REMARKS |
|---|---|---|---|---|

DESIGNED BY: E. MORALES
DRAWN BY: B. SANTOS
SHEET CHK'D BY: M. ALFORD
CROSS CHK'D BY:
APPROVED BY: M. ALFORD
DATE: JANUARY 2020

CDM Smith
4651 Salisbury Road, Suite 420
Jacksonville, FL 32256
Tel: (904) 731-7109
FL COA No. EB-0000020

JEA

WILSON BLVD. (180-45) AND 118th ST. (180-47)
MASTER PUMP STATION IMPROVEMENTS

WILSON BLVD. MASTER PUMP STATION
UPPER LEVEL
NEW WORK FLOOR PLAN

PROJECT NO. 6103-234169
FILE NAME: AWZ002PS.RVT

SHEET NO.
A-4

60% SUBMITTAL - NOT FOR CONSTRUCTION

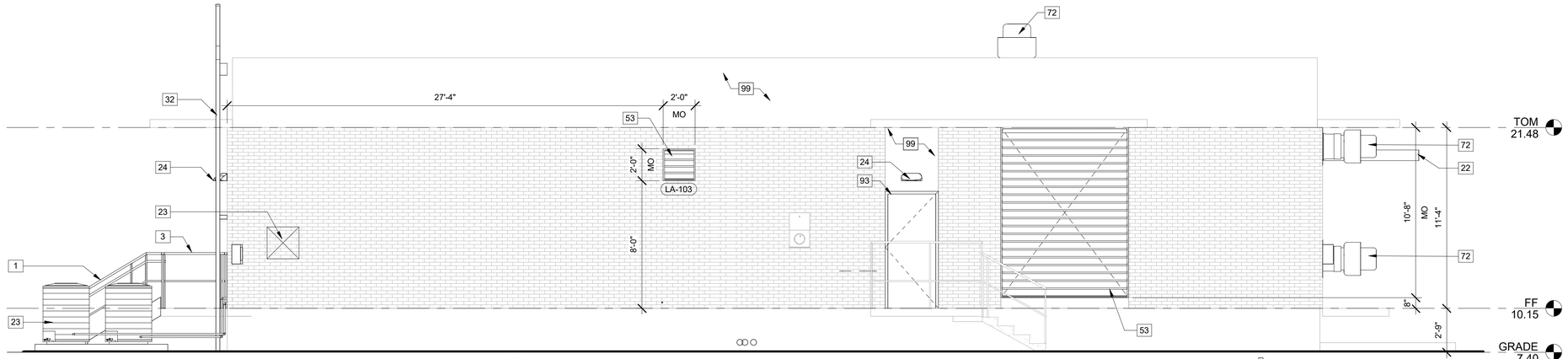


SOUTH ELEVATION
1/4" = 1'-0"

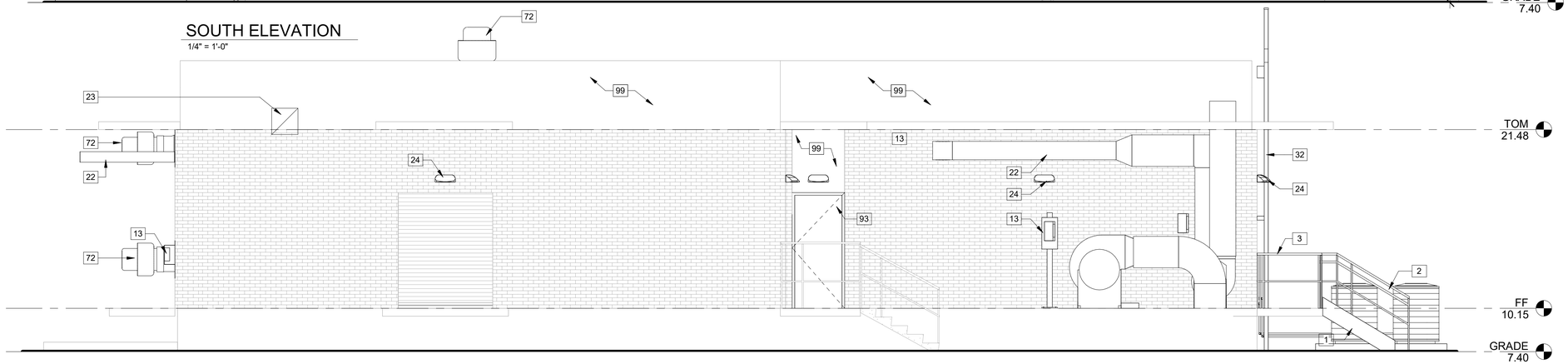


NORTH ELEVATION
1/4" = 1'-0"

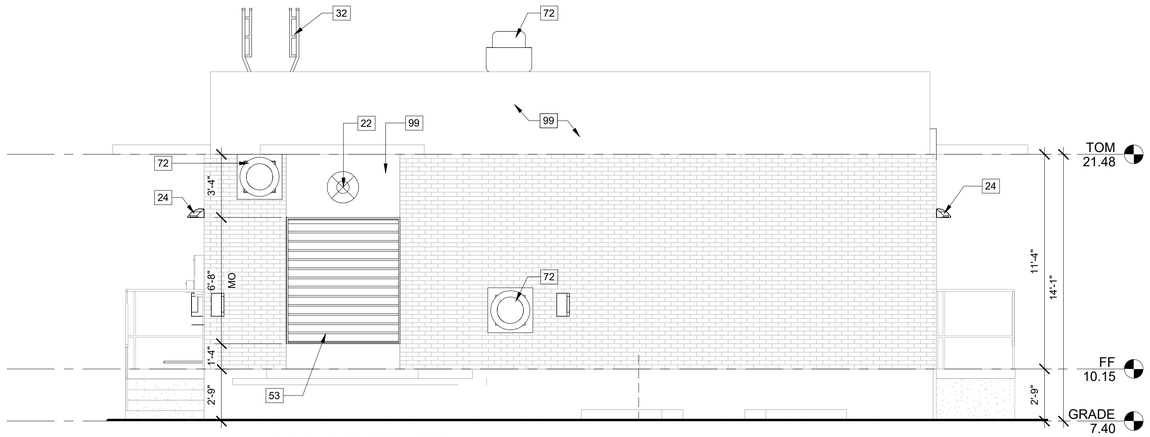


EAST ELEVATION
1/4" = 1'-0"

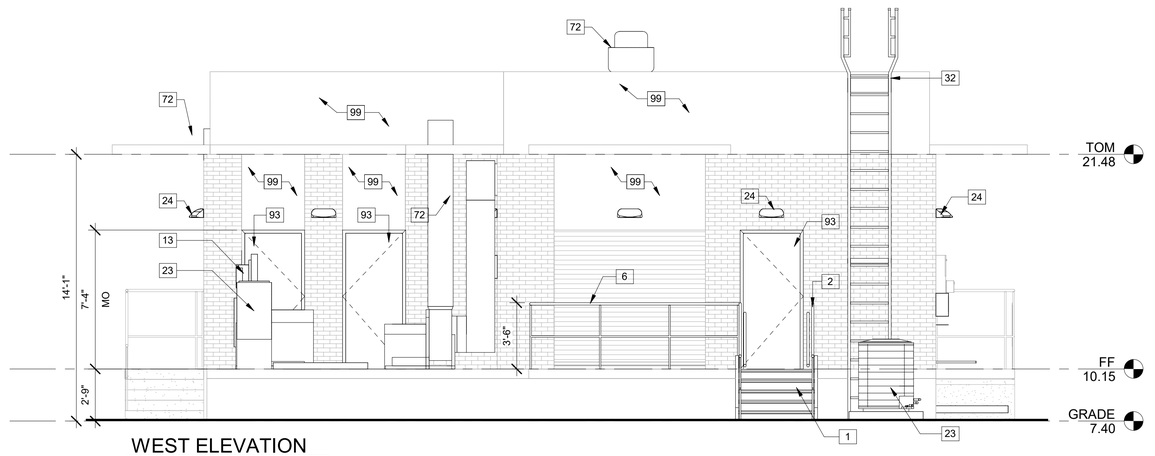


WEST ELEVATION
1/4" = 1'-0"

## GENERAL NOTES

1. SEE SHEET A-1 FOR ADDITIONAL GENERAL NOTES

| KEYNOTE LEGEND | |
|---|---|
| KEY VALUE | KEYNOTE TEXT |
| 1 | ALUMINUM STAIR WITH ALUMINUM GAURDRAIL AND HANDRAIL, SEE "S" DWGS |
| 2 | ALUMINUM GUARDRAIL WITH ALUMINUM HANDRAIL, TYP |
| 3 | ALUMINUM GUARDRAIL, TYP |
| 6 | NEW REMOVABLE ALUMINUM GUARDRAIL SECTION |
| 13 | ELEC EQUIP, SEE "E" DWGS |
| 22 | HVAC DUCTWORK, SEE "H" DWGS |
| 23 | HVAC EQUIPMENT, SEE "H" DWGS |
| 24 | LIGHT FIXTURE, SEE "E" DWGS |
| 32 | NEW ROOF LADDER WITH FALL PROTECTION SYSTEM |
| 53 | NEW DRAINABLE BLADE LOUVER, SEE "H" DWG |
| 72 | EXHAUST FAN TYP, SEE "H" DWGS |
| 93 | FRP DOOR AND ALUMINUM FRAME, SEE SCHED |
| 99 | CLEAN, PREPARE AND PAINT STUCCO FINISH, TYP |


MICHAEL T. ALFORD , AIA
NO. AR92055
FL. CORP ARCHITECTURE AA-002781
101 SOUTHHALL LANE, SUITE 200
MAITLAND, FL 32751


| REV. NO. | DATE | DRWN | CHKD | REMARKS |
|---|---|---|---|---|

DESIGNED BY: E. MORALES
DRAWN BY: B. SANTOS
SHEET CHK'D BY: M. ALFORD
CROSS CHK'D BY:
APPROVED BY: M. ALFORD
DATE: JANUARY 2020


CDM Smith
4651 Salisbury Road, Suite 420
Jacksonville, FL 32256
Tel: (904) 731-7109
FL COA No. EB-0000020


JEA

WILSON BLVD. (180-45) AND 118th ST. (180-47)
MASTER PUMP STATION IMPROVEMENTS

WILSON BLVD. MASTER PUMP STATION
NEW WORK EXTERIOR ELEVATIONS

PROJECT NO. 6103-234169
FILE NAME: AWZ002PS.RVT

SHEET NO.
A-5

60% SUBMITTAL - NOT FOR CONSTRUCTION


© 2019 CDM SMITH ALL RIGHTS RESERVED.
REUSE OF DOCUMENTS: THEESE DOCUMENTS AND DESIGNS PROVIDED BY PROFESSIONAL SERVICE, INCORPORATED HEREIN, ARE THE PROPERTY OF CDM SMITH AND ARE NOT TO BE USER, IN WHOLE OR PART, FOR ANY OTHER PROJECT WITHOUT THE WRITTEN AUTHORIZATION OF CDM SMITH.

© 2019 CDM SMITH ALL RIGHTS RESERVED.
REUSE OF DOCUMENTS: THESE DOCUMENTS AND DESIGNS PROVIDED BY PROFESSIONAL SERVICE, INCORPORATED HEREIN, ARE THE PROPERTY OF CDM SMITH AND ARE NOT TO BE USER, IN WHOLE OR PART, FOR ANY OTHER PROJECT WITHOUT THE WRITTEN AUTHORIZATION OF CDM SMITH.

## BARRIER FREE MOUNTING HEIGHTS

GENERAL NOTES:
1. PROVIDE WOOD BLOCKING AS REQUIRED FOR ALL TOILET ACCESSORIES.
2. WALL MOUNTED ACCESSORIES SHALL BE MOUNTED IN ACCORDANCE WITH REACH LIMITS APPLICABLE TO INSTALLATION LOCATION:
   - MAXIMUM UNOBSTRUCTED FORWARD OR SIDE REACH IS 48".
   - MAXIMUM OBSTRUCTED FORWARD REACH IS 44".
   - MAXIMUM OBSTRUCTED SIDE REACH IS 46".

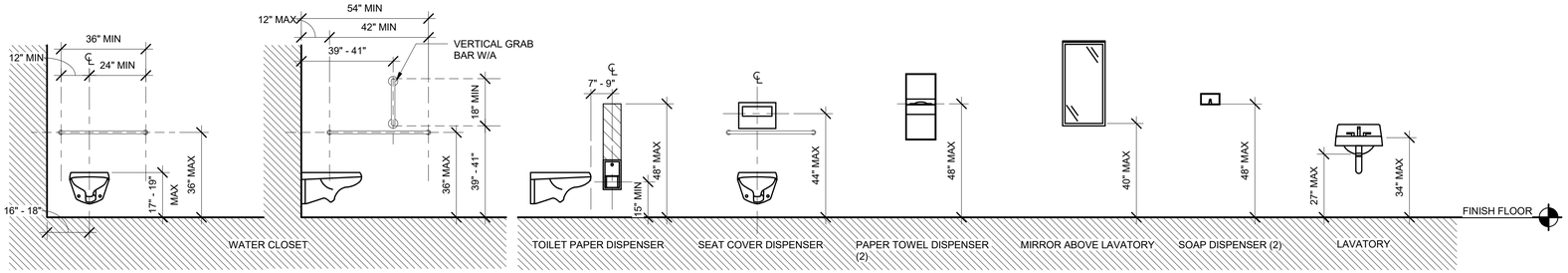


## CLEAR FLOOR AREA

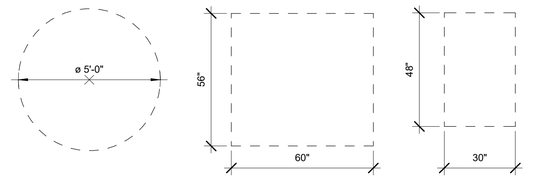


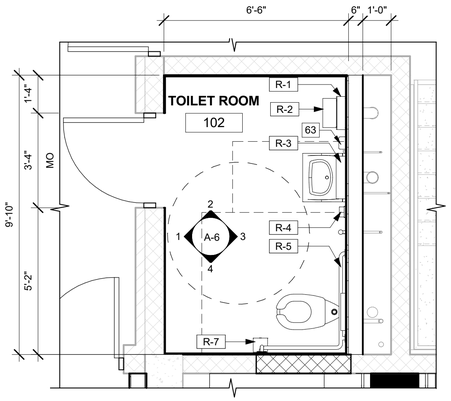


ENLARGED TOILET ROOM PLAN
3/8" = 1'-0"

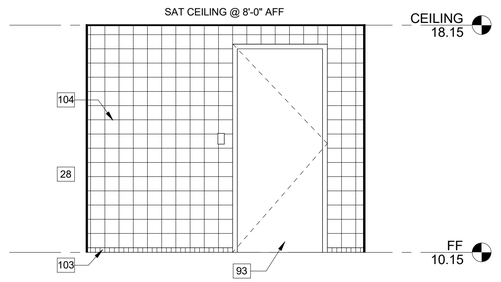


**1 TOILET ROOM WEST ELEVATION**
3/8" = 1'-0"

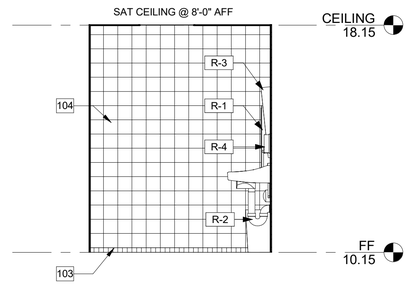


**2 TOILET ROOM NORTH ELEVATION**
3/8" = 1'-0"

| TOILET ACCESSORY SCHEDULE | | | | |
|---|---|---|---|---|
| TAG | QTY | MODEL | DESCRIPTION | MANUFACTURER |
| R-1 | 1 | 5510282 | ELEVATION AUTOMATIC PAPER TOWEL ROLL DISPENSER | TORK |
| R-2 | 1 | B-2260 | FLOOR STANDING WASTE RECEPTABLE WITH OPEN TOP | BRADLEY |
| R-3 | 1 | 740-018302 | FIXED -TILT MIRROR, WELDED CORNERS, 18 BY 30 INCHES | BOBRICK |
| R-4 | 1 | FMX-12 | SURFACE MOUNTED LIQUID SOAP DISPENSER | GOJO |
| R-5 | 1 | B-6806 | 1 1/2" DIAMETER STAINLESS STEEL HORIZONTAL TWO-WALL BAR | BOBRICK |
| R-6 | 1 | B-6806 | 1 1/2" DIAMETER STAINLESS STEEL VERTICAL WALL BAR | BOBRICK |
| R-7 | 1 | 247549A | TWIN JUMBO BATH TISSUE ROLL DISPENSER | TORK |
| R-8 | 1 | 311080 | TOILET SEAT COVER DISPENSER | TORK |

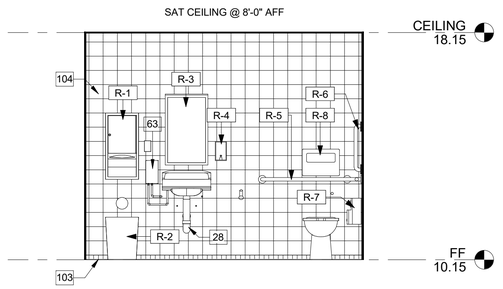


**3 TOILET ROOM EAST ELEVATION**
3/8" = 1'-0"

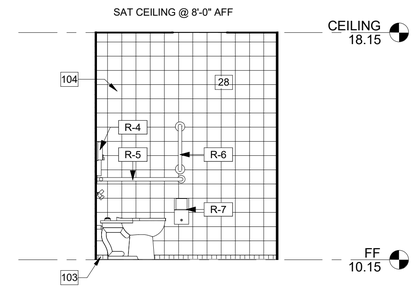


**4 TOILET ROOM SOUTH ELEVATION**
3/8" = 1'-0"

## GENERAL NOTES

1. SEE SHEET A-1 FOR ADDITIONAL GENERAL NOTES

| KEYNOTE LEGEND | |
|---|---|
| KEY VALUE | KEYNOTE TEXT |
| 28 | PLUMBING PIPES, SEE "P" DWGS |
| 63 | PLUMBING EQUIP, SEE "P" DWGS |
| 93 | FRP DOOR AND ALUMINUM FRAME, SEE SCHED |
| 103 | BUILT-UP CERAMIC TILE COVE BASE |
| 104 | CERAMIC WALL TILE, FIELD COLOR |

MICHAEL T. ALFORD , AIA
NO. AR92055
FL. CORP ARCHITECTURE AA-002781
101 SOUTHHALL LANE, SUITE 200
MAITLAND, FL 32751

| REV. NO. | DATE | DRWN | CHKD | REMARKS |
|---|---|---|---|---|

DESIGNED BY: G. HOBDY
DRAWN BY: G. HOBDY
SHEET CHK'D BY: M. ALFORD
CROSS CHK'D BY:
APPROVED BY: M. ALFORD
DATE: JANUARY 2020

CDM Smith
4651 Salisbury Road, Suite 420
Jacksonville, FL 32256
Tel: (904) 731-7109
FL COA No. EB-0000020

JEA

WILSON BLVD. (180-45) AND 118th ST. (180-47)
MASTER PUMP STATION IMPROVEMENTS

WILSON BLVD. MASTER PUMP STATION
ENLARGED TOILET ROOM PLAN AND ELEVATIONS

PROJECT NO. 6103-234169
FILE NAME: AWZ002PS.RVT

SHEET NO.
A-6

60% SUBMITTAL - NOT FOR CONSTRUCTION

## WILSON BLVD. MASTER PUMP STATION FINISH SCHEDULE

| ROOM NAME | ROOM NUMBER | FLOOR | | WALL | | | | | | | | | | CEILING | | | NOTES |
|---|---|---|---|---|---|---|---|---|---|---|---|---|---|---|---|---|---|
| | | | | NORTH | | EAST | | SOUTH | | WEST | | BASE | | | | | |
| | | MATERIAL | FINISH | MATERIAL | FINISH | MATERIAL | FINISH | MATERIAL | FINISH | MATERIAL | FINISH | MATERIAL | DETAIL | MATERIAL | FINISH | HEIGHT | |
| ELECTRICAL ROOM | 101 | CONC | SEALED | CMU | PTD | CMU | PTD | CMU | PTD | CEM BD | PTD | -- | -- | EXISTING | PTD | | 1,2 |
| TOILET ROOM | 102 | CONC | CT | CMU | CT | CEM BD | CT | CMU | CT | CMU | CT | CT | 1 | SAT | SPEC | 8'-0" | 1 |
| MOTOR AND CONTROL ROOM | 103 | CONC | EXISTING | CMU | PTD | CEM BD | PTD | CMU | PTD | CMU | PTD | -- | -- | EXISTING | PTD | | 1 |
| GEN. ROOM | 104 | CONC | EXISTING | CMU | PTD | CMU | PTD | CMU | PTD | CEM BD | PTD | -- | -- | EXISTING | PTD | | 1 |
| HALL | 105 | CONC | EXISTING | CMU | PTD | CMU | PTD | CMU | PTD | CMU | PTD | -- | -- | EXISTING | PTD | | 1 |
| SCREEN ROOM | 106 | CONC | EXISTING | CMU | PTD | CMU | PTD | CMU | PTD | CMU | PTD | -- | -- | EXISTING | PTD | | 1 |
| STAIR | 107 | CONC | EXISTING | CMU | PTD | CMU | PTD | CMU | PTD | CMU | PTD | -- | -- | EXISTING | PTD | | 1 |

NOTES:

1. CLEAN, PREPARE WALLS, FLOOR AND CEILING IN ACCORDANCE WITH MANUFACTURER'S REQUIREMENTS AND PAINT. SEE SPECIFICATION 099100 FOR PAINTING SYSTEMS

2. NEW RUBBER INSULATING FLOOR MAT

## WILSON BLVD. MASTER PUMP STATION DOOR SCHEDULE

| DOOR NUMBER | ROOM NAME | EXT DOOR | SIZE | | DOOR | | | | FRAME | | | DETAILS | | | FIRE RATING (MIN) | HARDWARE SET | NOTES |
|---|---|---|---|---|---|---|---|---|---|---|---|---|---|---|---|---|---|
| | | | WIDTH | HEIGHT | TYPE | MATERIAL | FINISH | GLAZING | TYPE | MATERIAL | FINISH | HEAD | JAMB | THRESHOLD | | | |
| DA-101 | ELECTRICAL ROOM | * | 3'-0" | 7'-2" | F | FRP | SPEC | -- | F1 | ALUM | SPEC | -- | -- | -- | 0 | HW-1 | 1 |
| DA-101A | ELECTRICAL ROOM | * | 4'-0" | 7'-2" | F | FRP | SPEC | -- | F1 | ALUM | SPEC | -- | -- | -- | 0 | HW-1 | 1 |
| DA-102 | TOILET ROOM | * | 3'-0" | 7'-2" | F | FRP | SPEC | -- | F1 | ALUM | SPEC | -- | -- | -- | 0 | HW-3 | 1 |
| DA-103 | MOTOR AND CONTROL ROOM | * | 3'-0" | 7'-2" | F | FRP | SPEC | -- | F1 | ALUM | SPEC | | -- | -- | 0 | HW-1 | 1 |
| DA-103A | MOTOR AND CONTROL ROOM | * | 3'-0" | 7'-2" | F | FRP | SPEC | -- | F1 | ALUM | SPEC | -- | -- | -- | 0 | HW-1 | 1 |
| DA-104 | GEN. ROOM | * | 3'-0" | 7'-2" | F | FRP | SPEC | -- | F1 | ALUM | SPEC | -- | -- | -- | 0 | HW-1 | 1 |
| DA-105 | HALL | * | 3'-0" | 7'-2" | F | FRP | SPEC | -- | F1 | ALUM | SPEC | -- | -- | -- | 0 | HW-1 | 1 |

NOTES:

1. FIELD VERIFY EXISTING DOOR OPENINGS

## WILSON BLVD. MASTER PUMP STATION LOUVER SCHEDULE

| LOUVER NUMBER | ROOM NAME | R.O. SIZE | | TYPE | PERFORMANCE | DEPTH | MATERIAL | FINISH | DETAIL | | | NOTES |
|---|---|---|---|---|---|---|---|---|---|---|---|---|
| | | WIDTH | HEIGHT | | | | | | HEAD | JAMB | SILL | |
| LA-103 | MOTOR AND CONTROL ROOM | 2'-0" | 2'-0" | L1 | HORIZONTAL DRAINABLE BLADE LOUVER | 6" | ALUM | SPEC | -- | -- | -- | |
| LA-104 | GEN. ROOM | 8'-0" | 10'-8" | L1 | HORIZONTAL DRAINABLE BLADE LOUVER | 6" | ALUM | SPEC | -- | -- | -- | |
| LA-104A | GEN. ROOM | 6'-0" | 6'-8" | L1 | HORIZONTAL DRAINABLE BLADE LOUVER | 6" | ALUM | SPEC | -- | -- | -- | |

## GENERAL NOTES

1. SEE SHEET A-1 FOR ADDITIONAL GENERAL NOTES

## DOOR TYPES

NTS

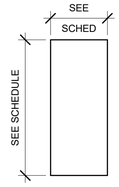


(F) FLUSH

## FRAME TYPE

NTS

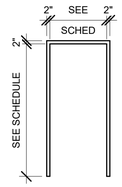


(F1)

## LOUVER TYPE

NTS

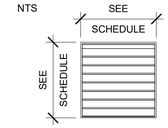


(L1)

## BASE AND FLOOR FINISH DETAIL

NTS

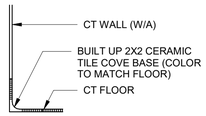


(1) CERAMIC TILE BASE

## PARTITION TYPES

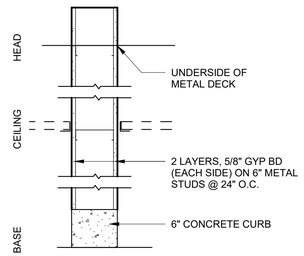


(A) INTERIOR 7 1/4" PARTITION
NO FIRE RESISTANCE RATING

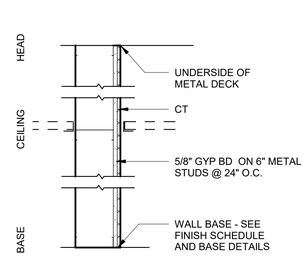


(B) INTERIOR 7 1/4" PARTITION - CHASE
NO FIRE RESISTANCE RATING

© 2019 CDM SMITH ALL RIGHTS RESERVED.
REUSE OF DOCUMENTS: THESE DOCUMENTS AND DESIGNS PROVIDED BY PROFESSIONAL SERVICE, INCORPORATED HEREIN, ARE THE PROPERTY OF CDM SMITH AND ARE NOT TO BE USER, IN WHOLE OR PART, FOR ANY OTHER PROJECT WITHOUT THE WRITTEN AUTHORIZATION OF CDM SMITH.

| REV. NO. | DATE | DRWN | CHKD | REMARKS |
|---|---|---|---|---|

DESIGNED BY: G. HOBDY
DRAWN BY: G. HOBDY
SHEET CHK'D BY: M. ALFORD
CROSS CHK'D BY:
APPROVED BY: M. ALFORD
DATE: JANUARY 2020

CDM Smith
4651 Salisbury Road, Suite 420
Jacksonville, FL 32256
Tel: (904) 731-7109
FL COA No. EB-0000020

JEA

WILSON BLVD. (180-45) AND 118th ST. (180-47)
MASTER PUMP STATION IMPROVEMENTS

WILSON BLVD. MASTER PUMP STATION
FINISH AND DOOR SCHEDULES,
DOOR AND FRAME TYPES AND PARTITION TYPES

MICHAEL T. ALFORD , AIA
NO. AR92055
FL. CORP ARCHITECTURE AA-002781
101 SOUTHHALL LANE, SUITE 200
MAITLAND, FL 32751

PROJECT NO. 6103-234169
FILE NAME: AWZ002PS.RVT

SHEET NO.
A-7

60% SUBMITTAL - NOT FOR CONSTRUCTION

## BUILDING CODE KEY DETERMINATIONS

| | | | | |
|---|---|---|---|---|
| CODES REVIEWED | FLORIDA BUILDING CODE, BUILDING SIXTH EDITION<br>FLORIDA BUILDING CODE, EXISTING BUILDING SIXTH EDITION<br>FLORIDA BUILDING CODE, ENERGY CONSERVATION SIXTH EDITION<br>FLORIDA FIRE PREVENTION CODE, SIXTH EDITION<br>FLORIDA ACCESSIBILITY CODE FOR BUILDING CONSTRUCTION, SIXTH EDITION | | | |
| EXISTING PUMP STATION | | | | |
| CLASSIFICATION OF WORK<br>SECTION 504 | LEVEL 2 ALTERATION<br>RECONFIGURATION OF SPACES, REPLACEMENT OF DOORS, INSTALLATION OF ADDITIONAL EQUIPMENT | | | |
| ACCESSIBILITY REQUIREMENTS<br>SECTION 203.5 | PUMP STATION FACILITIES AND ELECTRICAL AREAS FREQUENTED BY SERVICE PERSONNEL ONLY SHALL NOT BE REQUIRED TO COMPLY. | | | |
| BUILDING CLASSIFICATION<br>OCCUPANCY - SECTION 306<br>CONSTRUCTION - SECTION 602 | <br>EXISTING GROUP F-2 - NO CHANGE<br>EXISTING TYPE II-B (ASSUMED) - NO CHANGE | | | |
| BUILDING HEIGHT AND AREA | NO CHANGE IN BUILDING HEIGHT OR AREA | | | |
| OCCUPANT LOAD<br>SECTION 1004 | NO CHANGE<br>UPPER LEVEL = 398 SF/100 SF PER OCCUPANT = 3 OCCUPANTS | | | |
| EXITS PER SPACE<br>SECTION 1006 | REQUIRED | 1 | ACTUAL | 2 |
| MAX TRAVEL DISTANCE<br>TABLE 1017 | MAXIMUM 300 FT | | ACTUAL 18 FT | |
| SPRINKLERS REQUIRED | NO | PROVIDED: | NO | |

*OCCUPANT LOAD SHOWN IS FOR MEANS OF EGRESS CALCULATIONS. ACTUAL OCCUPANT LOAD IS 3 EMPLOYEES MAXIMUM FOR MAINTENENACE

## LIFE SAFETY LEGEND

- EXIT DISCHARGE
- EXIT SIGN
- FE — FIRE EXTINGUISHER
- EGRESS PATH
- X — TRAVEL DISTANCE (FEET)

## BARRIER FREE MOUNTING HEIGHT

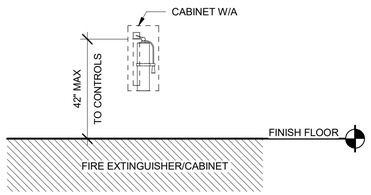


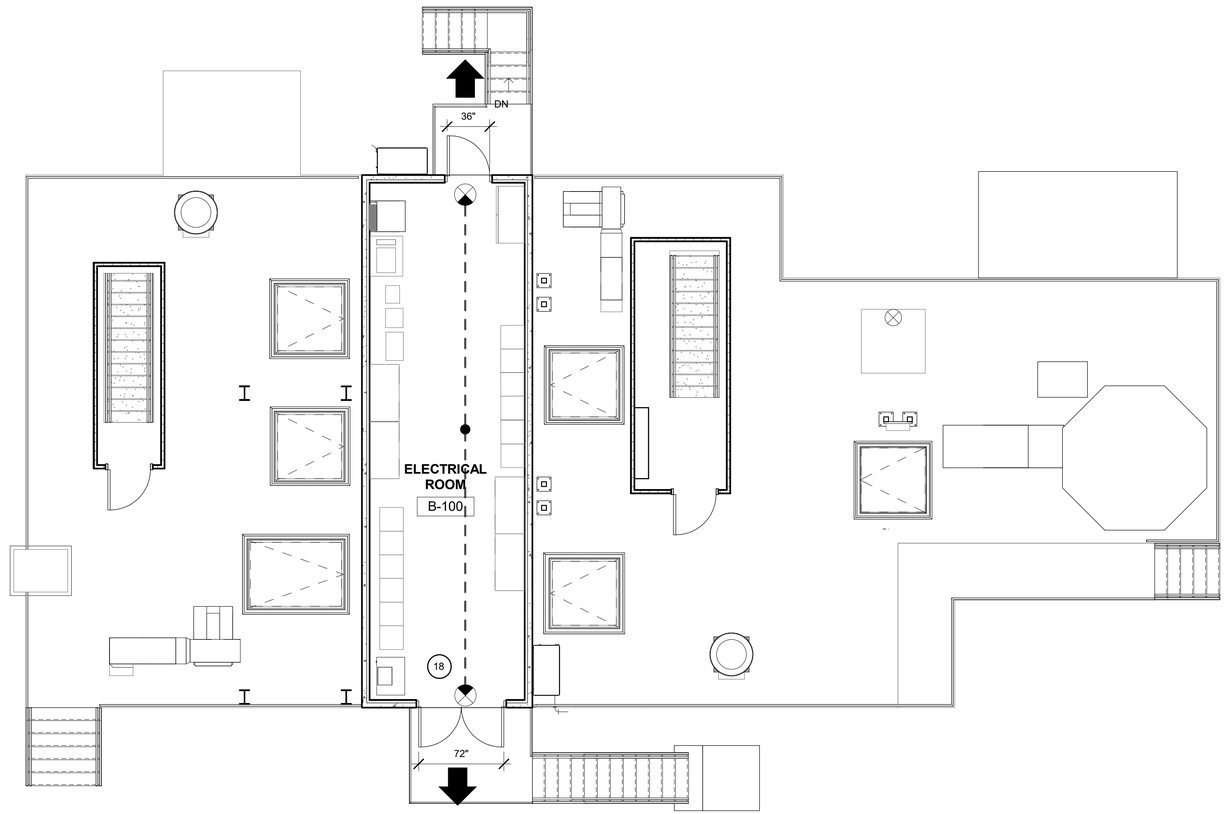


LIFE SAFETY PLAN
3/16" = 1'-0"

## GENERAL NOTES

SEE SHEET A-1 FOR ADDITIONAL GENERAL NOTES

© 2019 CDM SMITH ALL RIGHTS RESERVED.
REUSE OF DOCUMENTS: THESE DOCUMENTS AND DESIGNS PROVIDED BY PROFESSIONAL SERVICE, INCORPORATED HEREIN, ARE THE PROPERTY OF CDM SMITH AND ARE NOT TO BE USER, IN WHOLE OR PART, FOR ANY OTHER PROJECT WITHOUT THE WRITTEN AUTHORIZATION OF CDM SMITH.

| REV. NO. | DATE | DRWN | CHKD | REMARKS |
|---|---|---|---|---|
| | | | | |

DESIGNED BY: G. HOBDY
DRAWN BY: G. HOBDY
SHEET CHK'D BY: M. ALFORD
CROSS CHK'D BY:
APPROVED BY: M. ALFORD
DATE: JANUARY 2020

CDM Smith
4651 Salisbury Road, Suite 420
Jacksonville, FL 32256
Tel. (904) 731-7109
FL COA No. EB-0000020

JEA

WILSON BLVD. (180-45) AND 118th ST. (180-47)
MASTER PUMP STATION IMPROVEMENTS

118TH ST. MASTER PUMP STATION
BUILDING KEY CODE DETERMINATIONS AND
LIFE SAFETY PLAN

MICHAEL T. ALFORD , AIA
NO. AR92055
FL. CORP ARCHITECTURE AA-002781
101 SOUTHHALL LANE, SUITE 200
MAITLAND, FL 32751

PROJECT NO. 6103-234169
FILE NAME: AWZ001PS.RVT

SHEET NO.
A-9

60% SUBMITTAL - NOT FOR CONSTRUCTION

© 2019 CDM SMITH ALL RIGHTS RESERVED.
REUSE OF DOCUMENTS: THESE DOCUMENTS AND DESIGNS PROVIDED BY PROFESSIONAL SERVICE, INCORPORATED HEREIN, ARE THE PROPERTY OF CDM SMITH AND ARE NOT TO BE USER, IN WHOLE OR PART, FOR ANY OTHER PROJECT WITHOUT THE WRITTEN AUTHORIZATION OF CDM SMITH.

## GENERAL NOTES

SEE SHEET A-1 FOR ADDITIONAL GENERAL NOTES

| KEYNOTE LEGEND | |
|---|---|
| KEY VALUE | KEYNOTE TEXT |
| 88 | NEW OPENING IN SLAB, SE "S" DWGS |
| 270 | REMOVE EXISTING ROOF, DOORS, LOUVERS, AND INTERIOR AND EXTERIOR MASONRY WALLS FROM ROOF TO TOP OF SLAB (ELEV. 6.9 NAVD) |
| 271 | REMOVE EXISTING METAL GUARDRAILS AND HANDRAILS |
| 272 | REMOVE PORTION OF EXISTING CONCRETE WALKWAY |
| 273 | REMOVE EXISTING CONCRETE STAIR AND ASSOCIATED HAND/GUARDRAIL |
| 274 | REMOVE EXISTING RESTROOM FIXTURES AND ACCESSORIES |
| 275 | REMOVE EXISTING SERVICE SINK |
| 276 | REMOVE EXISTING MONORAIL AND MONORAIL STRUCTURE |
| 277 | REMOVE EXISTING ROOF LADDER AND CAGE |
| 278 | REMOVE PORTION OF EXISTING FLOOR SLAB TO ENLARGE EXISTING OPENING |
| 279 | REMOVE EXISTING METAL HATCH PLATE COVER AND FRAME |
| 299 | PORTION OF WALKWAY TO REMAIN |

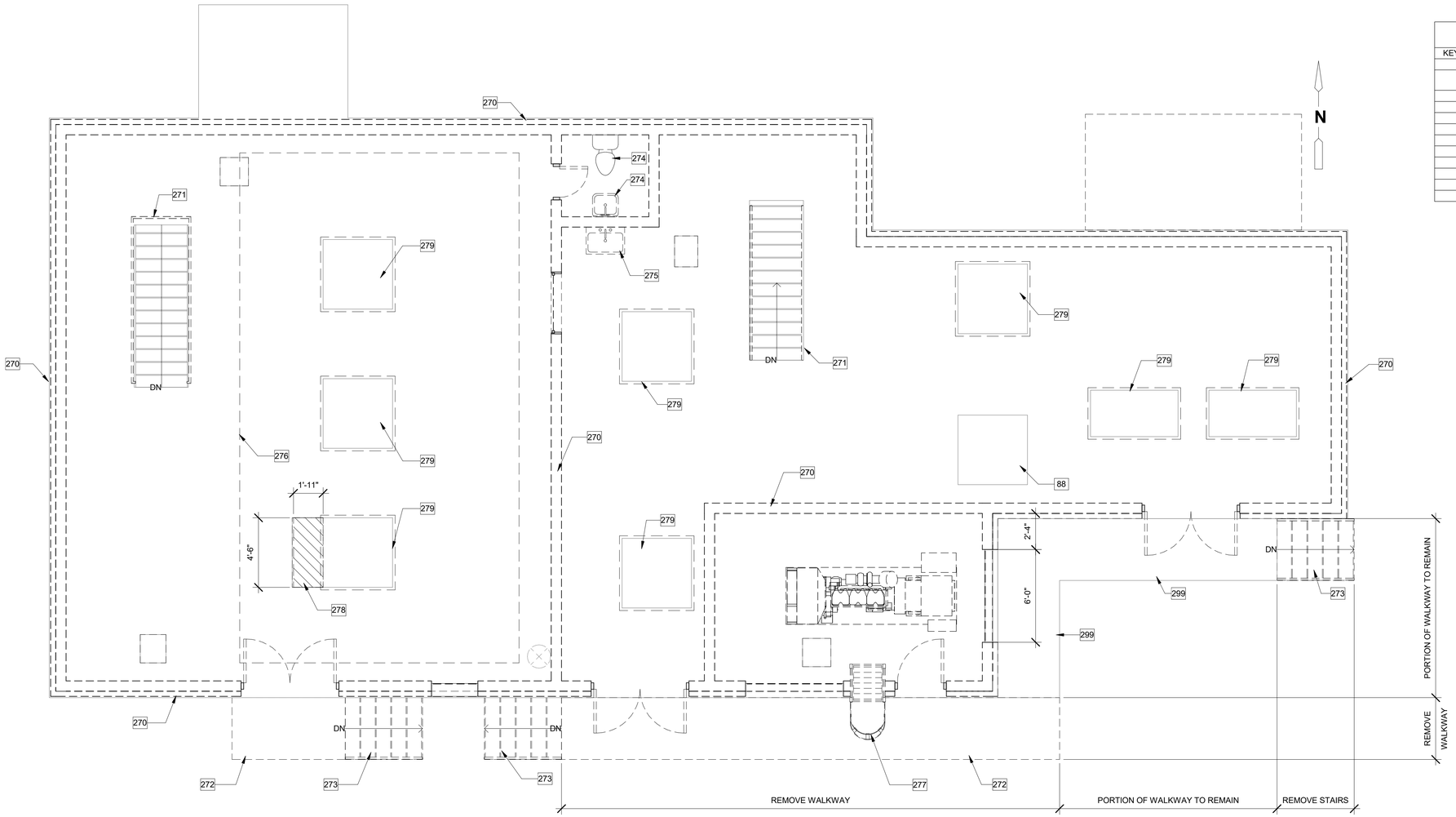


## DEMOLITION FLOOR PLAN

1/4" = 1'-0"

| REV. NO. | DATE | DRWN | CHKD | REMARKS |
|---|---|---|---|---|
| | | | | |

DESIGNED BY: E. MORALES
DRAWN BY: B. SANTOS
SHEET CHK'D BY: M. ALFORD
CROSS CHK'D BY: X
APPROVED BY: M. ALFORD
DATE: JANUARY 2020

CDM Smith
4651 Salisbury Road, Suite 420
Jacksonville, FL 32256
Tel: (904) 731-7109
FL COA No. EB-0000020

JEA

WILSON BLVD. (180-45) AND 118th ST. (180-47)
MASTER PUMP STATION IMPROVEMENTS

118TH ST. MASTER PUMP STATION
UPPER LEVEL
DEMOLITION PLAN

MICHAEL T. ALFORD , AIA
NO. AR92055
FL. CORP ARCHITECTURE AA-002781
101 SOUTHHALL LANE, SUITE 200
MAITLAND, FL 32751

PROJECT NO. 6103-234169
FILE NAME: AWZ001PS.RVT

SHEET NO.
A-10

60% SUBMITTAL - NOT FOR CONSTRUCTION

© 2019 CDM SMITH ALL RIGHTS RESERVED.
REUSE OF DOCUMENTS: THESE DOCUMENTS AND DESIGNS PROVIDED BY PROFESSIONAL SERVICE, INCORPORATED HEREIN, ARE THE PROPERTY OF CDM SMITH AND ARE NOT TO BE USER, IN WHOLE OR PART, FOR ANY OTHER PROJECT WITHOUT THE WRITTEN AUTHORIZATION OF CDM SMITH.

## GENERAL NOTES

SEE SHEET A-1 FOR ADDITIONAL GENERAL NOTES

| KEYNOTE LEGEND | |
|---|---|
| KEY VALUE | KEYNOTE TEXT |
| 1 | ALUMINUM STAIR WITH ALUMINUM GAURDRAIL AND HANDRAIL, SEE "S" DWGS |
| 8 | CONCRETE CURB, SEE "S" DWGS |
| 12 | MONORAIL SUPPORT, TYP SEE "S" DWGS |
| 13 | ELEC EQUIP, SEE "E" DWGS |
| 19 | FLOOR ACCESS DOOR, TYP SEE "S" DWGS |
| 23 | HVAC EQUIPMENT, SEE "H" DWGS |
| 59 | INFILL EXISTING SLAB OPENING, SEE "S" DWGS |
| 60 | NEW RUBBER INSULATING FLOOR MAT, TYP |
| 67 | FRP STAIR ENCLOSURE |
| 93 | FRP DOOR AND ALUMINUM FRAME, SEE SCHED |
| 166 | ODOR EQUIPMENT SEE "M" DWGS |
| 280 | PATCH AND REPAIR CONCRETE WHERE WALLS WERE REMOVED |
| 281 | RELOCATED BUBBLER SYSTEM |
| 292 | PREMANUFACTURED PRECAST CONCRETE ELECTRICAL BUILDING |
| 296 | ALUMINUM GUARDRAIL |
| 297 | NEW REMOVABLE ALUMINUM GUARDRAIL |
| 300 | EXISTING CONCRETE WALKWAY |

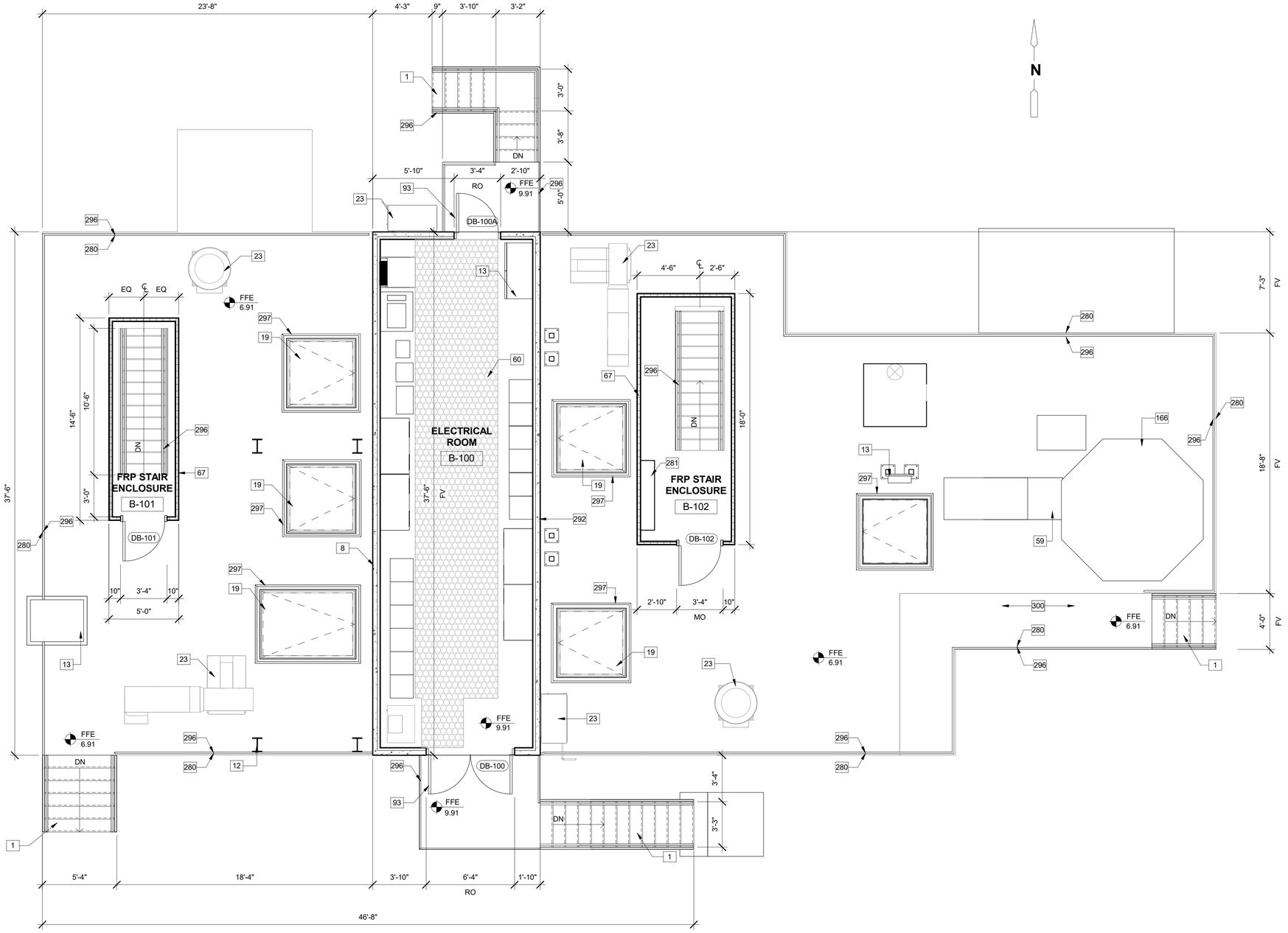


## NEW WORK FLOOR PLAN

1/4" = 1'-0"

MICHAEL T. ALFORD , AIA
NO. AR92055
FL. CORP ARCHITECTURE AA-002781
101 SOUTHHALL LANE, SUITE 200
MAITLAND, FL 32751

| REV. NO. | DATE | DRWN | CHKD | REMARKS |
|---|---|---|---|---|

DESIGNED BY: E. MORALES
DRAWN BY: B. SANTOS
SHEET CHK'D BY: M. ALFORD
CROSS CHK'D BY:
APPROVED BY: M. ALFORD
DATE: JANUARY 2020

CDM Smith
4651 Salisbury Road, Suite 420
Jacksonville, FL 32256
Tel: (904) 731-7109
FL COA No. EB-0000020

JEA

WILSON BLVD. (180-45) AND 118th ST. (180-47)
MASTER PUMP STATION IMPROVEMENTS

118TH ST. MASTER PUMP STATION
UPPER LEVEL
NEW WORK PLAN

PROJECT NO. 6103-234169
FILE NAME: AWZ001PS.RVT

SHEET NO.
A-11

60% SUBMITTAL - NOT FOR CONSTRUCTION

© 2019 CDM SMITH ALL RIGHTS RESERVED.
REUSE OF DOCUMENTS: THESE DOCUMENTS AND DESIGNS PROVIDED BY PROFESSIONAL SERVICE, INCORPORATED HEREIN, ARE THE PROPERTY OF CDM SMITH AND ARE NOT TO BE USER, IN WHOLE OR PART, FOR ANY OTHER PROJECT WITHOUT THE WRITTEN AUTHORIZATION OF CDM SMITH.

## GENERAL NOTES

SEE SHEET A-1 FOR ADDITIONAL GENERAL NOTES

| KEYNOTE LEGEND | |
|---|---|
| KEY VALUE | KEYNOTE TEXT |
| 1 | ALUMINUM STAIR WITH ALUMINUM GAURDRAIL AND HANDRAIL, SEE "S" DWGS |
| 13 | ELEC EQUIP, SEE "E" DWGS |
| 22 | HVAC DUCTWORK, SEE "H" DWGS |
| 23 | HVAC EQUIPMENT, SEE "H" DWGS |
| 24 | LIGHT FIXTURE, SEE "E" DWGS |
| 44 | MONORAIL STRUCTURE, SEE "S" DWGS |
| 67 | FRP STAIR ENCLOSURE |
| 72 | EXHAUST FAN TYP, SEE "H" DWGS |
| 93 | FRP DOOR AND ALUMINUM FRAME, SEE SCHED |
| 292 | PREMANUFACTURED PRECAST CONCRETE ELECTRICAL BUILDING |
| 296 | ALUMINUM GUARDRAIL |

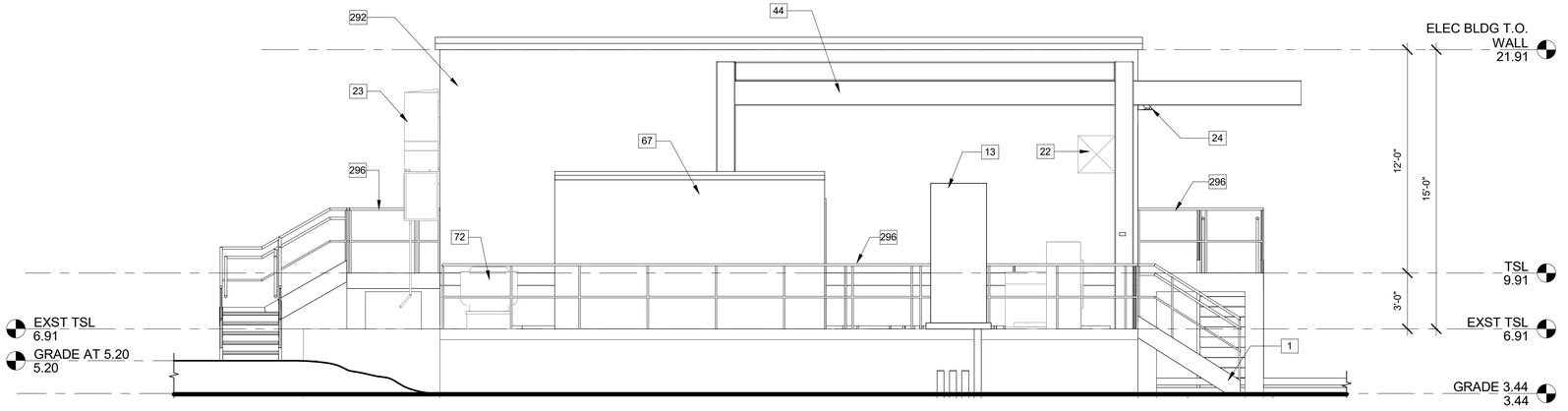


WEST ELEVATION
1/4" = 1'-0"

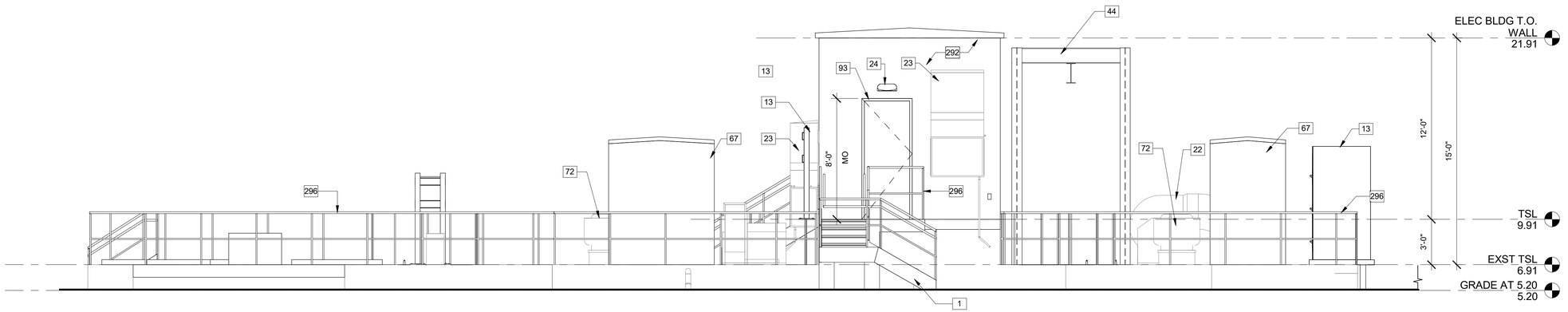


NORTH ELEVATION
1/4" = 1'-0"

MICHAEL T. ALFORD , AIA
NO. AR92055
FL. CORP ARCHITECTURE AA-002781
101 SOUTHHALL LANE, SUITE 200
MAITLAND, FL 32751

| REV. NO. | DATE | DRWN | CHKD | REMARKS |
|---|---|---|---|---|
| | | | | |

DESIGNED BY: E. MORALES
DRAWN BY: G. HOBDY
SHEET CHK'D BY: M. ALFORD
CROSS CHK'D BY: X
APPROVED BY: X
DATE: JANUARY 2020

CDM Smith
4651 Salisbury Road, Suite 420
Jacksonville, FL 32256
Tel: (904) 731-7109
FL COA No. EB-0000020

JEA

WILSON BLVD. (180-45) AND 118th ST. (180-47)
MASTER PUMP STATION IMPROVEMENTS

118TH ST. MASTER PUMP STATION
NEW WORK EXTERIOR ELEVATIONS

PROJECT NO. 6103-234169
FILE NAME: AWZ001PS.RVT

SHEET NO.
A-13

60% SUBMITTAL - NOT FOR CONSTRUCTION

## GENERAL NOTES

SEE SHEET A-1 FOR ADDITIONAL GENERAL NOTES

| KEYNOTE LEGEND | |
|---|---|
| KEY VALUE | KEYNOTE TEXT |
| 1 | ALUMINUM STAIR WITH ALUMINUM GAURDRAIL AND HANDRAIL, SEE "S" DWGS |
| 13 | ELEC EQUIP, SEE "E" DWGS |
| 22 | HVAC DUCTWORK, SEE "H" DWGS |
| 23 | HVAC EQUIPMENT, SEE "H" DWGS |
| 24 | LIGHT FIXTURE, SEE "E" DWGS |
| 44 | MONORAIL STRUCTURE, SEE "S" DWGS |
| 67 | FRP STAIR ENCLOSURE |
| 72 | EXHAUST FAN TYP, SEE "H" DWGS |
| 93 | FRP DOOR AND ALUMINUM FRAME, SEE SCHED |
| 292 | PREMANUFACTURED PRECAST CONCRETE ELECTRICAL BUILDING |
| 296 | ALUMINUM GUARDRAIL |

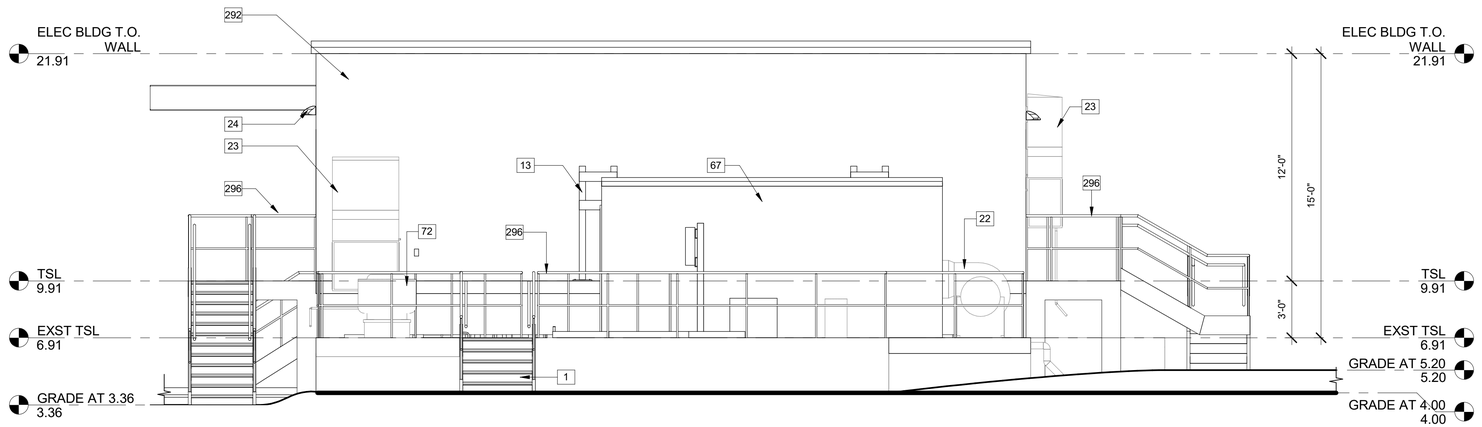


EAST ELEVATION

1/4" = 1'-0"

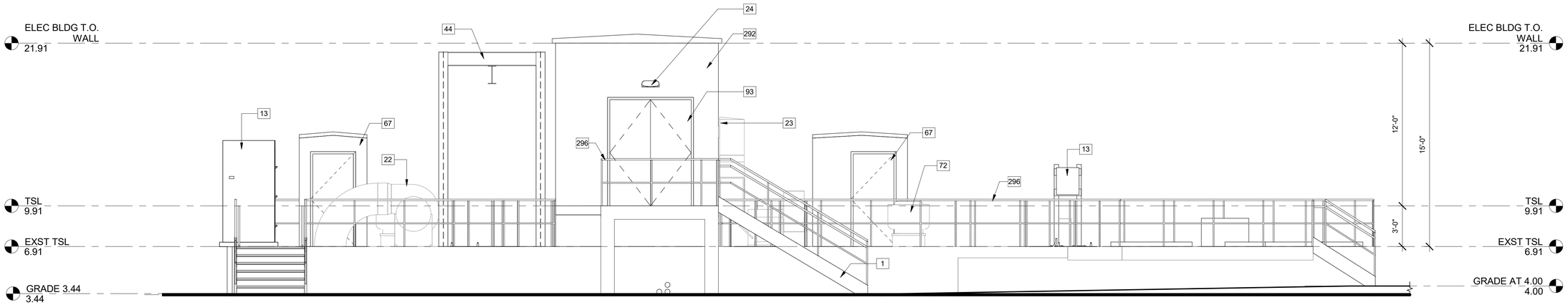


SOUTH ELEVATION

1/4" = 1'-0"

| 118TH ST. MASTER PUMP STATION FINISH SCHEDULE | | | | | | | | | | | | | | | | | |
|---|---|---|---|---|---|---|---|---|---|---|---|---|---|---|---|---|---|
| | | FLOOR | | WALL | | | | | | | | | | CEILING | | | |
| | | | | NORTH | | EAST | | SOUTH | | WEST | | BASE | | | | | |
| ROOM NAME | ROOM NUMBER | MATERIAL | FINISH | MATERIAL | FINISH | MATERIAL | FINISH | MATERIAL | FINISH | MATERIAL | FINISH | MATERIAL | DETAIL | MATERIAL | FINISH | HEIGHT | NOTES |
| ELECTRICAL ROOM | B-100 | CONC | SEAL | FRP | SPEC | FRP | SPEC | FRP | SPEC | FRP | SPEC | -- | -- | CONC | EXPOSED | 12'-0" | 1 |
| FRP STAIR ENCLOSURE | B-101 | CONC | SEAL | FRP | SPEC | FRP | SPEC | FRP | SPEC | FRP | SPEC | -- | -- | FRP | SPEC | | |
| FRP STAIR ENCLOSURE | B-102 | CONC | SEAL | FRP | SPEC | FRP | SPEC | FRP | SPEC | FRP | SPEC | -- | -- | FRP | SPEC | | |

NOTES:

1. NEW RUBBER INSULATING FLOOR MAT

| 118TH ST. MASTER PUMP STATION DOOR SCHEDULE | | | | | | | | | | | | | | | | | |
|---|---|---|---|---|---|---|---|---|---|---|---|---|---|---|---|---|---|
| | | | SIZE | | | DOOR | | | | FRAME | | | DETAILS | | | | | |
| DOOR NUMBER | ROOM NAME | EXT DOOR | | WIDTH | HEIGHT | TYPE | MATERIAL | FINISH | GLAZING | TYPE | MATERIAL | FINISH | HEAD | JAMB | THRESHOLD | FIRE RATING (MIN) | HARDWARE SET | NOTES |
| DB-100 | ELECTRICAL ROOM | * | PR | 3'-0" | 7'-10" | F | FRP | SPEC | -- | F2 | ALUM | SPEC | -- | -- | -- | | | |
| DB-100A | ELECTRICAL ROOM | * | | 3'-0" | 7'-10" | F | FRP | SPEC | -- | F1 | ALUM | SPEC | -- | -- | -- | | | |
| DB-101 | FRP STAIR ENCLOSURE | * | | 3'-0" | 6'-10" | F | FRP | SPEC | -- | F1 | FRP | SPEC | -- | -- | -- | | | |
| DB-102 | FRP STAIR ENCLOSURE | * | | 3'-0" | 6'-10" | F | FRP | SPEC | -- | F1 | FRP | SPEC | -- | -- | -- | | | |

## DOOR TYPE

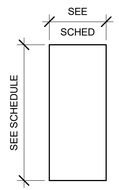


## DOOR FRAME TYPES

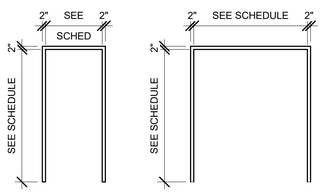



MICHAEL T. ALFORD , AIA
NO. AR92055
FL. CORP ARCHITECTURE AA-002781
101 SOUTHHALL LANE, SUITE 200
MAITLAND, FL 32751


| REV. NO. | DATE | DRWN | CHKD | REMARKS |
|---|---|---|---|---|

DESIGNED BY: G. HOBDY
DRAWN BY: G. HOBDY
SHEET CHK'D BY: M. ALFORD
CROSS CHK'D BY:
APPROVED BY: M. ALFORD
DATE: JANUARY 2020


CDM Smith
4651 Salisbury Road, Suite 420
Jacksonville, FL 32256
Tel: (904) 731-7109
FL COA No. EB-0000020


JEA

WILSON BLVD. (180-45) AND 118th ST. (180-47)
MASTER PUMP STATION IMPROVEMENTS

118TH ST. MASTER PUMP STATION
NEW WORK ELEVATION, FINISH AND DOOR
SCHEUDULES AND DOOR AND FRAME TYPES

PROJECT NO. 6103-234169
FILE NAME:

SHEET NO.
A-14

60% SUBMITTAL - NOT FOR CONSTRUCTION


© 2019 CDM SMITH ALL RIGHTS RESERVED.
REUSE OF DOCUMENTS: THESE DOCUMENTS AND DESIGNS PROVIDED BY PROFESSIONAL SERVICE, INCORPORATED HEREIN, ARE THE PROPERTY OF CDM SMITH AND ARE NOT TO BE USED, IN WHOLE OR PART, FOR ANY OTHER PROJECT WITHOUT THE WRITTEN AUTHORIZATION OF CDM SMITH.

# GENERAL NOTES

DESIGN CRITERIA:

CODES:

- FLORIDA BUILDING CODE, BUILDING SIXTH EDITION (2017)
- FLORIDA BUILDING CODE, EXISTING BUILDING SIXTH EDITION (2017)
- ENVIRONMENTAL STRUCTURES: ACI 350 "CODE REQUIREMENTS FOR ENVIRONMENTAL ENGINEERING CONCRETE STRUCTURES"
- OTHER STRUCTURES: ACI 318 "BUILDING CODE REQUIREMENTS FOR REINFORCED CONCRETE"
- AISC MANUAL OF STEEL CONSTRUCTION, FOURTEENTH EDITION
- ACI 530 "BUILDING CODE REQUIREMENTS FOR REINFORCED MASONRY STRUCTURES"

DESIGN LOADS (APPLIES TO WILSON BLVD & 118TH ST SITES, UON):

LIVE LOADS:

| | | |
|---|---|---|
| – ROOF LIVE | 20 | PSF |
| – STAIRWAYS & WALKWAYS | 100 | PSF |
| – NEW ELEVATED SLABS | 200 | PSF |
| – PROCESS SLABS ON GRADE | 200 | PSF |

SUPERIMPOSED DEAD LOADS:

| | | |
|---|---|---|
| – ROOFS | 10 | PSF |

WIND DESIGN DATA:

| | |
|---|---|
| – ULTIMATE DESIGN WIND SPEED, $V_{ULT}$ (3–SECOND GUST): | 135 MPH |
| – NOMINAL DESIGN WIND SPEED, $V_{ASD}$: | 112 MPH |
| – RISK CATEGORY: | III/IV |
| – WIND EXPOSURE CATEGORY: | C |
| – ENCLOSURE CLASSIFICATION: | ENCLOSED |
| – INTERNAL PRESSURE COEFFICIENT: | ±0.18 |

FLOOD DESIGN DATA:

| | |
|---|---|
| – 1% ANNUAL CHANCE FLOOD BASE FLOOD ELEVATION (ZONE AE NAVD 88) | 6.00' (WILSON BLVD)<br>4.00' (118TH ST) |

CONCRETE 28–DAY STRENGTH:

| | | |
|---|---|---|
| – COLUMNS, BEAMS, SLABS, WALLS, FOOTINGS | 4500 | PSI |
| – MASONRY FILLED CELL GROUT | 2500 | PSI |
| – PRESTRESSED ELEMENTS | 5000 | PSI |

REINFORCING STEEL:

- ALL BARS ASTM A615, GRADE 60
- WELDED WIRE FABRIC ASTM A1064

FOUNDATIONS:

- THE FOLLOWING BEARING CAPACITIES ARE AS LISTED IN THE GEOTECHNICAL REPORTS
- ALLOWABLE NET BEARING PRESSURE FOR SHALLOW FOUNDATIONS OVER SUBSURFACE PREPARED AS PER SPECIFICATIONS: 2500 PSF (118TH ST)
- ALLOWABLE NET BEARING PRESSURE FOR THRUST BLOCK OVER SUBSURFACE PREPARED AS PER SPECIFICATIONS: 2000 PSF (WILSON BLVD)

GENERAL CONDITIONS:

ALL STRUCTURAL DRAWINGS SHALL BE USED IN CONJUNCTION WITH THE ARCHITECTURAL, HVAC, PLUMBING, MECHANICAL, CIVIL, ELECTRICAL AND SHOP DRAWINGS AND SPECIFICATIONS.

THE CONTRACTOR SHALL REVIEW AND VERIFY DIMENSIONS SHOWN IN ALL PLANS AND REVIEW ALL FIELD CONDITIONS THAT MAY AFFECT THE INSTALLATION OF THE FACILITY, SHOULD DISCREPANCIES APPEAR, THE CONTRACTOR SHALL NOTIFY THE ENGINEER IN WRITING TO OBTAIN ENGINEER'S CLARIFICATION BEFORE COMMENCING WITH THE WORK.

FOR ALL ITEMS EMBEDDED IN OR PASSED THROUGH CONCRETE, THE CONTRACTOR SHALL INITIALLY REFER TO MECHANICAL, HEATING AND VENTILATION DRAWINGS FOR TYPE, SIZE, LOCATION AND SPECIAL INSTALLATION REQUIREMENTS FOR THESE ITEMS.

THE CONTRACTOR SHALL TAKE ANY AND ALL NECESSARY MEASURES TO PROTECT EXISTING STRUCTURES FROM DAMAGE WHEN WORKING IN AND AROUND EXISTING STRUCTURES PERFORMING WORK SUCH AS DEMOLITION, FOUNDATION EXCAVATION AND OTHERS.

SIZE AND LOCATION OF EQUIPMENT PADS AND ANCHOR BOLTS SHALL BE PER EQUIPMENT MANUFACTURER'S REQUIREMENTS.

ANY EQUIPMENT THAT MAY INDUCE VIBRATION TO THE STRUCTURE SHALL BE ADEQUATELY ISOLATED FROM THE STRUCTURES.

ALL DETAILS AND SECTIONS SHOWN ON THE DRAWINGS ARE INTENDED TO BE TYPICAL AND SHALL BE CONSTRUED TO APPLY TO ANY SIMILAR SITUATION ELSE–WHERE ON THE PROJECT, EXCEPT WHERE A DIFFERENT DETAIL IS SHOWN.

STANDARD DETAILS APPLY TO ALL SIMILAR SITUATIONS ON THE PROJECT, EXCEPT WHERE A DIFFERENT DETAIL IS SHOWN.

UNLESS OTHERWISE NOTED, ALL PIPES UNDER SOIL SUPPORTED STRUCTURAL SLABS AND FOOTINGS SHALL BE ENCASED IN REINFORCED CONCRETE AS SHOWN ON THE STRUCTURAL DRAWINGS. PIPES SHALL BE PRESSURE TESTED BEFORE ENCASING. NOT ALL PIPING SHOWN ON STRUCTURAL DRAWINGS. REFER TO CIVIL, PROCESS MECHANICAL, HVAC AND PLUMBING DRAWINGS FOR PIPING SIZE AND LOCATIONS.

CONCRETE:

ALL MATERIALS AND METHODS OF CONSTRUCTION SHALL BE IN ACCORDANCE WITH ACI 318 REQUIREMENTS.

ALL CONCRETE SHALL BE AIR ENTRAINED.

WATER REDUCING AGENT SHALL BE IN ACCORDANCE WITH ASTM C494.

ALL CONCRETE SURFACES EXPOSED TO AIR, UNLESS OTHERWISE NOTED IN SPECIFICATIONS, SHALL BE TREATED WITH AN APPROPRIATE CURING COMPOUND AS SOON AS CEMENT FINISHING IS COMPLETED OR FORMS ARE REMOVED.

ALL EXPOSED CORNERS OF CONCRETE SHALL HAVE A MINIMUM CHAMFER OF ¾" UNLESS OTHERWISE NOTED.

THE CONTRACTOR SHALL OBTAIN ENGINEER'S APPROVAL FOR THE LOCATION OF CONSTRUCTION JOINTS THAT ARE NOT SHOWN ON THE DRAWING.

REINFORCING STEEL:

REINFORCEMENT SHALL CONFORM TO ASTM A615, GRADE 60 REQUIREMENTS.

ALL ACCESSORIES SHALL BE IN CONFORMANCE WITH ACI 315 REQUIREMENTS. REINFORCING STEEL SHALL HAVE THE FOLLOWING CLEAR COVER UNLESS OTHER–WISE NOTED:

- CONCRETE CAST AGAINST EARTH 3"
- FORMED SURFACES IN CONTACT WITH SOIL, SEWAGE, WATER OR EXPOSED TO WEATHER 2"
- FORMED SURFACES NOT EXPOSED TO WEATHER OR IN CONTACT WITH SOIL:
  - SLABS, WALLS AND JOISTS 1"
  - BEAMS AND COLUMNS 1½"

LAP SPLICES SHALL BE AS SHOWN ON THE DRAWINGS. FOR LAP SPLICES NOT SHOWN ON THE DRAWINGS, THE CONTRACTOR SHALL OBTAIN ENGINEER'S APPROVAL.

THE CONTRACTOR SHALL PREPARE PLACING DRAWINGS AND SCHEDULES IN CONFORMANCE WITH ACI 315 REQUIREMENTS.

PRECAST PRESTRESSED CONSTRUCTION:

ALL PRECAST PRESTRESSED MEMBERS SHALL BE DESIGNED BY A REGISTERED PROFESSIONAL ENGINEER FOR THE SUPERIMPOSED LOADS SHOWN ON THE DRAWINGS IN CONFORMANCE WITH THE REQUIREMENTS OF APPLICABLE SPECIFICATIONS. EQUIPMENT LOADS OR OTHER LOADING SHALL BE CONSIDERED AS REQUIRED.

CONCRETE MASONRY:

DESIGN CRITERIA:

- DESIGN COMPRESSIVE STRENGTH OF MASONRY AT 28 DAYS f'm = 1900 PSI
- ALLOWABLE STEEL STRESS fs = 32,000 PSI

CONTINUOUS INSPECTION IS REQUIRED FOR ALL MASONRY WORK.

ALL MATERIALS AND METHODS OF CONSTRUCTION SHALL BE IN ACCORDANCE WITH DRAWINGS AND SPECIFICATIONS AND:

- THE NATIONAL CONCRETE MASONRY ASSOCIATION "SPECIFICATIONS FOR DESIGN AND CONSTRUCTION OF LOAD BEARING STRUCTURES."
- ACI 530 "BUILDING CODE REQUIREMENTS FOR REINFORCED MASONRY STRUCTURES."

MATERIALS:

- BLOCK: CONFORM TO ASTM C90 – LOAD BEARING, NORMAL WEIGHT TWO CELL, 8"x8"x16" AND 12"x8"x16" (COMPRESSIVE STRENGTH, NET AREA 2000 PSI).
- MORTAR: CONFORM TO ASTM C270, TYPE S. MINIMUM COMPRESSIVE STRENGTH AT 28 DAYS – 1800 PSI. UTILIZE TYPE II CEMENT AND TYPE S LIME. MASONRY CEMENT WILL NOT BE CONSIDERED.
- MASONRY FILLED GROUT: TO COFORM TO ASTM C476.
- STEEL: DUR–O–WAL OR EQUAL LADDER TYPE JOINT REINFORCEMENT AT EVERY SECOND COURSE (16" OC) BOND BEAM AND FILLED CELL REINFORCEMENT AS PER DRAWINGS (ASTM A615, GRADE 60).

CONSTRUCTION:

- ALL FILLED CELLS AND COLUMNS SHALL BE POURED AT LEAST TWO (2) HOURS PRIOR TO POURING LINTEL BLOCK OR TIE BEAMS.
- MAXIMUM CONSTRUCTION HEIGHT OF MASONRY WALLS WITHOUT FILLED CELL OR COLUMN POURS IS TO BE 8'–0". THE CONCRETE FOR FILLED CELLS SHALL BE RODDED OR PUDDLED DURING PLACEMENT TO ENSURE COMPLETE FILLING TO THE BLOCK CORE.
- SEE STANDARD DETAILS AND ARCHITECTURAL DRAWINGS FOR LINTEL REQUIREME–MENTS OVER OPENINGS.
- PROVIDE CLEAN OUT AND INSPECTION BLOCK OUTS IN CELLS CONTAINING REINFORCEMENT.

FLOTATION CONSIDERATION:

STRUCTURES WERE DESIGNED TO BE NON–BUOYANT AFTER THE STRUCTURE IS PLACED INTO SERVICE. THEREFORE, THE STRUCTURE MAY BE BUOYANT DURING CONSTRUCTION. THE GENERAL CONTRACTOR SHALL PROTECT ALL STRUCTURES (NEW AND EXISTING) FROM FLOATATION DURING CONSTRUCTION, REGARDLESS OF GROUNDWATER LEVELS, UNTIL STRUCTURES ARE PLACED IN OPERATION.

STRUCTURAL STEEL:

DESIGN, FABRICATION, ERECTION MATERIALS AND WORKMANSHIP SHALL BE IN ACCORDANCE WITH THE LATEST AISC SPECIFICATIONS AND DESIGN DRAWINGS.

ALL STRUCTURAL STEEL:

| | |
|---|---|
| W SHAPES – | ASTM A992 |
| M, S AND HP SHAPES – | ASTM A36 |
| CHANNELS AND ANGLES – | ASTM A36 |
| HSS (SQUARE, RECTANGULAR AND ROUND) – | ASTM A500 |
| PLATES – | ASTM A36 |
| HIGH–STRENGTH BOLTS – | ASTM F3125 |
| TENSION CONTROL BOLTS – | ASTM F1852 |
| NUTS – | ASTM A563 |
| HARDENED STEEL WASHER – | ASTM F436 |
| ANCHOR RODS – | ASTM F1554 |
| THREADED RODS – | ASTM A36 |

ALL PIPE: ASTM A53, GRADE B.

THE FABRICATOR SHALL DESIGN AND DETAIL ALL PARTS OF CONNECTIONS NOT FULLY DETAILED ON THE DESIGN DRAWINGS. THE NUMBER OF BOLTS AND OTHER SIMILAR ELEMENTS SHOWN ON THE DRAWING ARE PICTORIAL ONLY.

SHOP AND ERECTION DRAWINGS SHALL BE SUBMITTED TO THE ENGINEER FOR REVIEW.

WELDED CONNECTIONS SHALL BE IN ACCORDANCE WITH THE LATEST AWS STRUCTURAL WELDING CODE REQUIREMENTS. ELECTRODES SHALL BE E–70XX.

STRUCTURAL ALUMINUM:

DESIGN, FABRICATION, ERECTION MATERIALS AND WORKMANSHIP SHALL BE IN ACCORDANCE WITH THE LATEST "ALUMINUM DESIGN MANUAL" (ADM) SPECIFICATIONS AND DESIGN DRAWINGS.

ALL STRUCTURAL ALUMINUM:

| | |
|---|---|
| ALUMINUM EXTRUDED PIPE – | ASTM B429, ALLOY 6063–T6 |
| ALUMINUM EXTRUDED SHAPE – | ASTM B221, ALLOY 6061–T6 |
| ALUMINUM SHEET AND PLATE – | ASTM B209, ALLOY 6061–T6 |
| ALUMINUM ALLOY ROLLED THREAD PLATE – | ASTM B209, ALLOY 6061–T6 |
| ALUMINUM CASTING – | ASTM B26/B36M, ALLOY 443.0–F |

SHOP AND ERECTION DRAWINGS SHALL BE SUBMITTED TO THE ENGINEER FOR REVIEW.

WELDED CONNECTIONS SHALL BE IN ACCORDANCE WITH THE LATEST AWS D1.2/D1.2M "STRUCTURAL WELDING CODE – ALUMINUM".

WHERE ALUMINUM CONTACTS A DISSIMILAR METAL, APPLY TO THE DISSIMILAR METAL A HEAVY BRUSH COAT OF ZINC–CHROMATE PRIMER FOLLOWED BY TWO COATS OF ALUMINUM METAL PAINT.

WHERE ALUMINUM CONTACTS MASONRY OR CONCRETE, APPLY A HEAVY COAT OF BITUMASTIC OR EPOXY PAINT.

REPAIR AND REHABILITATION REQUIREMENTS:

SEE SHEET S–3 CONCRETE FOR PROTECTIVE COATING SYSTEM PREPARATION NOTES.

SEE SHEET S–10 FOR REPAIR AND REHABILITATION REQUIREMENTS AND DETAILS.

GEOTECHNICAL REPORT:

GEOTECHNICAL REPORT PREPARED BY MAE:

- "REPORT OF GEOTECHNICAL EXPLORATION FOR JEA WILSON BOULEVARD PUMP STATION", DATED OCTOBER 18, 2019.
- "REPORT OF GEOTECHNICAL EXPLORATION FOR JEA 118TH STREET PUMP STATION", DATED OCTOBER 14, 2019.

## ABBREVIATIONS:

| | | | |
|---|---|---|---|
| AL | ALUMINUM | MIN | MINIMUM |
| BLDG | BUILDING | MISC | MISCELLANEOUS |
| BOT | BOTTOM | NF | NEAR FACE |
| CC | CENTER TO CENTER | NTS | NOT TO SCALE |
| CJ | CONTROL JOINT | OC | ON CENTER |
| CMU | CONCRETE MASONRY UNIT | PCJ | PARTIAL CONTRACTION JOINT |
| CONC | CONCRETE | PL | PLATE |
| CONST JT | CONSTRUCTION JOINT | PLF | POUNDS PER LINEAR FOOT |
| CONT | CONTINUOUS | PROJ | PROJECTION |
| DIA | DIAMETER | PSF | POUNDS PER SQUARE FOOT |
| DWG | DRAWING | PSI | POUNDS PER SQUARE INCH |
| EF | EACH FACE | REINF | REINFORCEMENT |
| EJ | EXPANSION JOINT | SPECS | SPECIFICATIONS |
| EL | ELEVATION | SS | STAINLESS STEEL |
| EW | EACH WAY | STD | STANDARD |
| FF | FAR FACE | T&B | TOP AND BOTTOM |
| FTG | FOOTING | T/STRUCTURE | TOP OF STRUCTURE |
| HORIZ | HORIZONTAL | TYP | TYPICAL |
| HP | HIGH POINT | UON | UNLESS OTHERWISE NOTED |
| ID | INSIDE DIAMETER | VERT | VERTICAL |
| LP | LOW POINT | VIF | VERIFY IN FIELD |
| MAT'L | MATERIAL | WP | WORK POINT |
| MAX | MAXIMUM | WSTP | WATERSTOP |
| | | WWF | WELDED WIRE FABRIC |

NOTE:

THESE ABBREVIATIONS ARE FOR USE ON STRUCTURAL DRAWINGS ONLY.

| REV. NO. | DATE | DRWN | CHKD | REMARKS |
|---|---|---|---|---|

DESIGNED BY: E. RIVERA
DRAWN BY: M. TRAPP
SHEET CHK'D BY: K. FRANCOFORTE
CROSS CHK'D BY: R. HAGAMAN
APPROVED BY: E. RIVERA
DATE: FEBRUARY 2020

CDM Smith
4651 Salisbury Road, Suite 420
Jacksonville, FL 32256
Tel: (904) 731-7109
FL COA No. EB-0000020

JEA

WILSON BLVD. (180-45) AND 118th ST. (180-47)
MASTER PUMP STATION IMPROVEMENTS

STRUCTURAL NOTES

PROJECT NO. 6103–234169
FILE NAME: S001STNT.DWG

SHEET NO.
S-1

60% SUBMITTAL - NOT FOR CONSTRUCTION

XREFs: [CDMS_2234] Images: []
Last saved by: RIVERAEA Time: 2/14/2020 3:53:04 PM
pw:\\cdmsmith-az02-pw.bentley.com:PW_XM1\6103\234169 JEA PDB\04 Design Services NM_60%\04 Structural\10 CADD\S001STNT.dwg
©2020 CDM SMITH ALL RIGHTS RESERVED.
REUSE OF DOCUMENTS: THESE DOCUMENTS AND DESIGNS PROVIDED BY PROFESSIONAL SERVICE, INCORPORATED HEREIN, ARE THE PROPERTY OF CDM SMITH AND ARE NOT TO BE USED, IN WHOLE OR PART, FOR ANY OTHER PROJECT WITHOUT THE WRITTEN AUTHORIZATION OF CDM SMITH.

© 2019 CDM SMITH ALL RIGHTS RESERVED.
REUSE OF DOCUMENTS: THEESE DOCUMENTS AND DESIGNS PROVIDED BY PROFESSIONAL SERVICE, INCORPORATED HEREIN, ARE THE PROPERTY OF CDM SMITH AND ARE NOT TO BE USER, IN WHOLE OR PART, FOR ANY OTHER PROJECT WITHOUT THE WRITTEN AUTHORIZATION OF CDM SMITH.

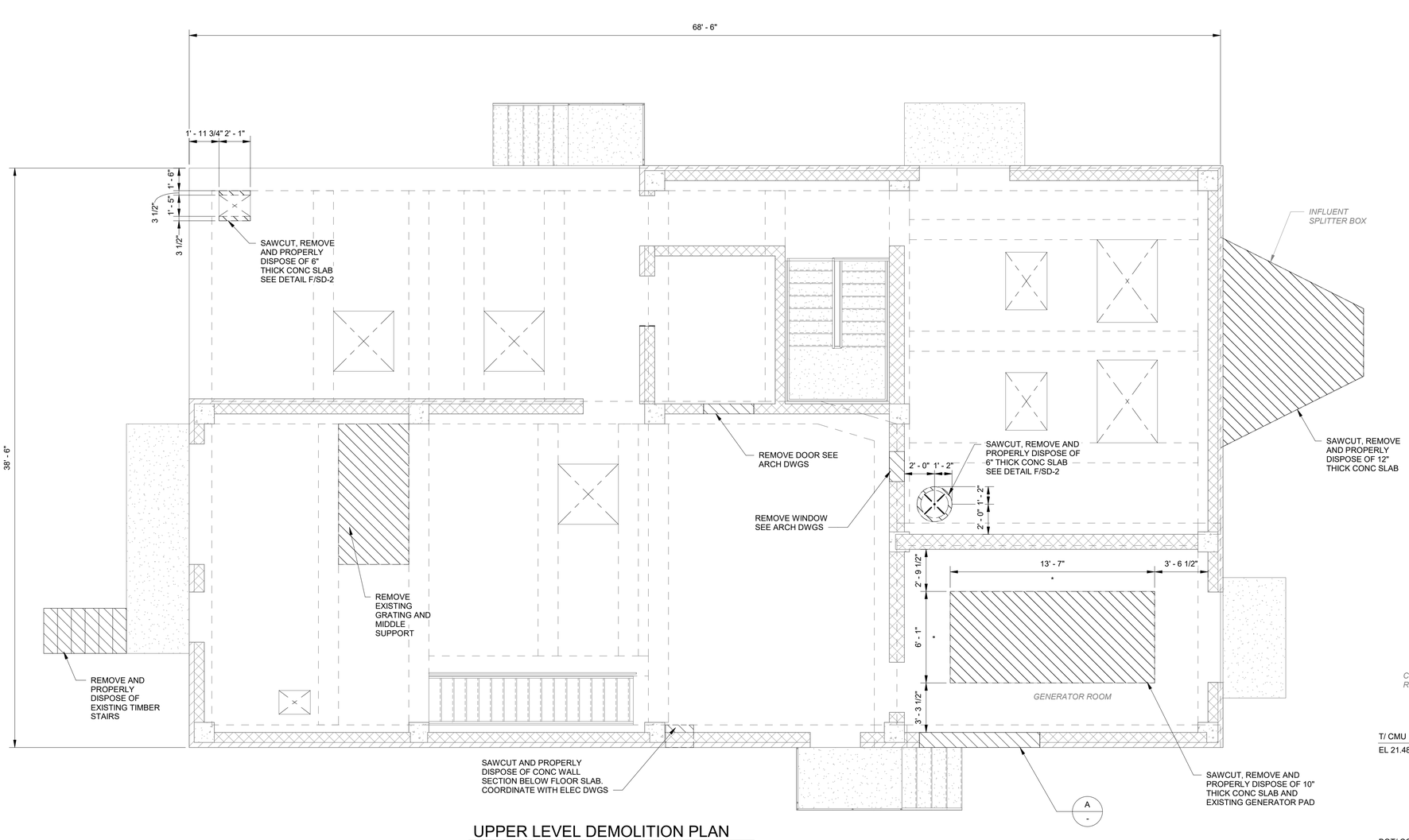


## UPPER LEVEL DEMOLITION PLAN

1/4" = 1'-0"

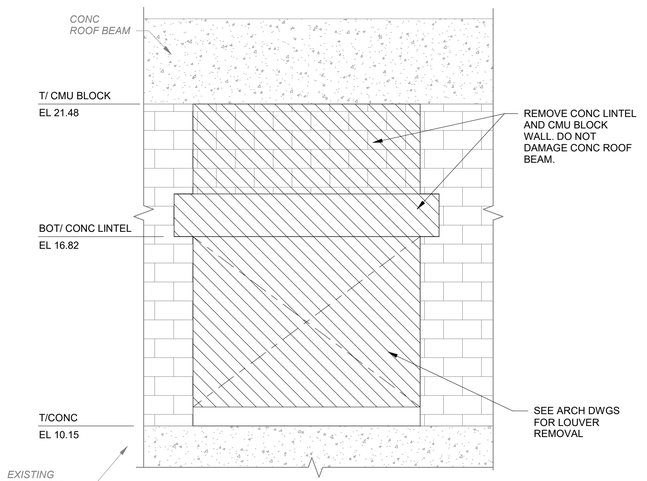


LOUVER REMOVAL

## A – DETAIL

3/8" = 1'-0"

| REV. NO. | DATE | DRWN | CHKD | REMARKS |
|---|---|---|---|---|
| | | | | |

DESIGNED BY: E. RIVERA
DRAWN BY: M. TRAPP
SHEET CHK'D BY: K. FRANCOFORTE
CROSS CHK'D BY: R. HAGAMAN
APPROVED BY: E. RIVERA
DATE: JANUARY 2020

CDM Smith
4651 Salisbury Road, Suite 420
Jacksonville, FL 32256
Tel: (904) 731-7109
FL COA No. EB-0000020

JEA

WILSON BLVD. (180-45) AND 118th ST. (180-47)
MASTER PUMP STATION IMPROVEMENTS

WILSON BLVD.
UPPER LEVEL DEMOLITION PLAN

PROJECT NO. 6103-234169
FILE NAME: SWZ002PS.RVT

SHEET NO.
S-2

60% SUBMITTAL - NOT FOR CONSTRUCTION

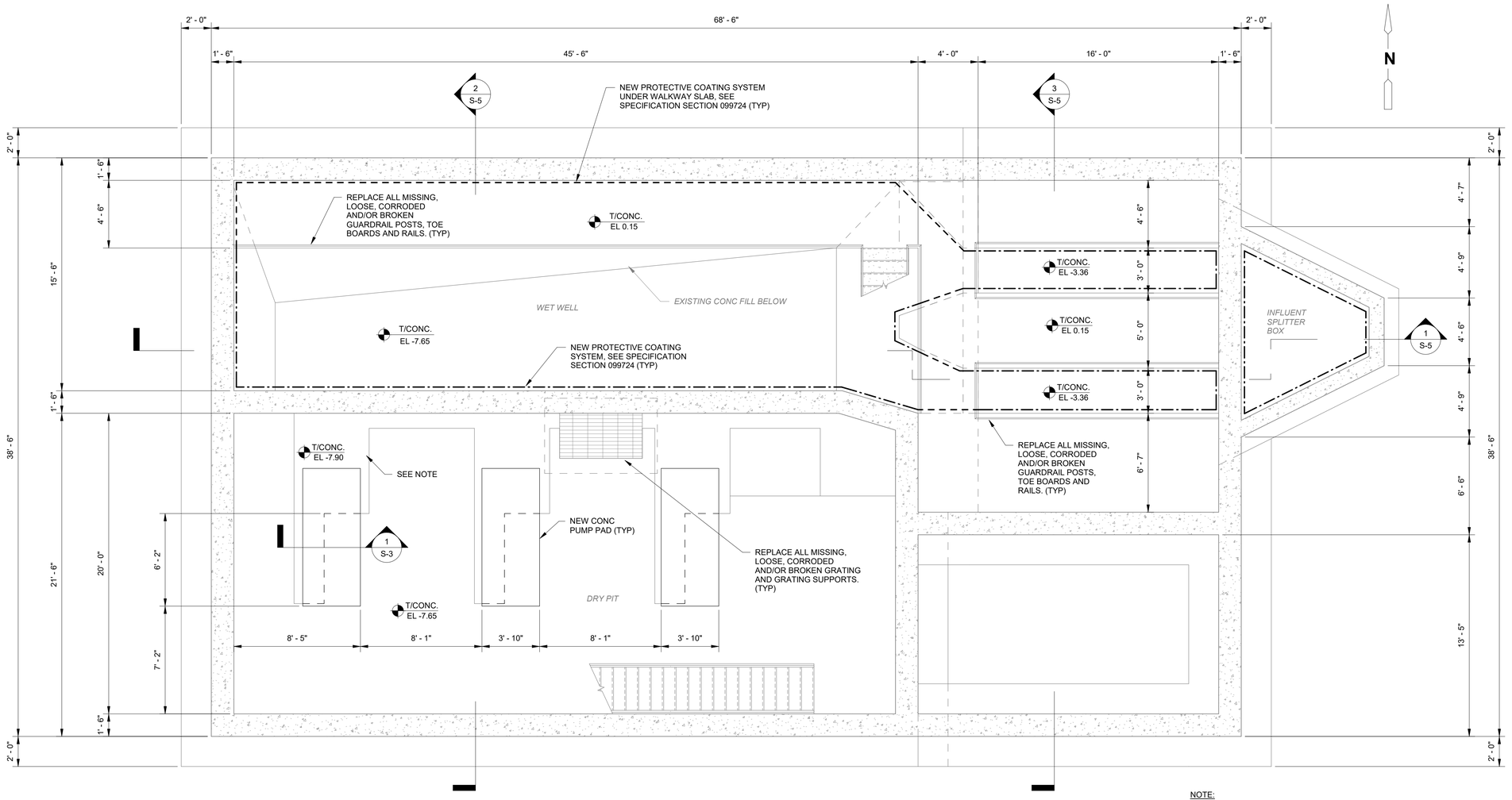


## LOWER LEVEL PLAN

1/4" = 1'-0"

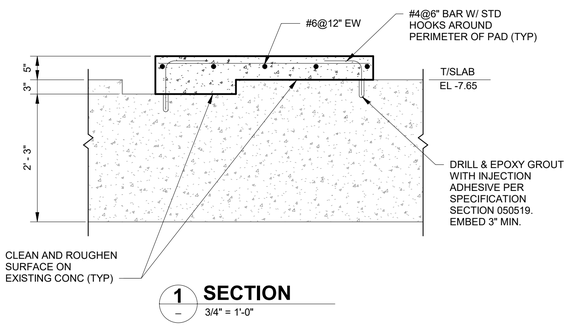


## 1 SECTION

3/4" = 1'-0"

NOTE:

REMOVE EXISTING GUARDRAIL AROUND NEW PUMP PADS

CONCRETE REPAIR QUANTITIES (WILSON BLVD):

1. THE CONCRETE REPAIR QUANTITIES LISTED BELOW ARE ESTIMATES FOR BIDDING PURPOSES. ACTUAL DIMENSIONS SHALL BE DETERMINED BY THE CONTRACTOR PRIOR TO CONTRUCTION.
2. THE CONTRACTOR SHALL NOTIFY THE ENGINEER THE DATE(S) WHEN THE QUANTITIES ARE MEASURED SO THAT THE ENGINEER IS PRESENT FOR OBSERVATION.
3. CONCRETE SURFACE REPAIRS: 301 SQUARE FEET
4. CONCRETE SURFACE REPAIRS WITH EXPOSED REBAR: 1425 SQUARE FEET
5. CONCRETE REPAIRS THAT INCLUDE REBAR REPLACMENT: 780 SQUARE FEET
6. CRACK REPAIRS: 150 LINEAR FEET

CONCRETE PROTECTIVE COATING SYSTEM PREPARATION NOTES:

1. CONTRACTOR SHALL REMOVE AND REPLACE THE INFLUENT JUNCTION BOX TOPS OF WILSON BLVD AND 118TH ST PUMP STATIONS. CONTRACTOR SHALL CLEAN, INSPECT, TEST, PREPARE, AND REPAIR/REHABILITATE THE CONCRETE AT EACH PUMP STATION. CONTRACTOR SHALL PROVIDE ALL LABOR, MATERIALS, EQUIPMENT AND INCIDENTALS AS SHOWN, SPECIFIED AND REQUIRED TO PERFORM CONCRETE INSPECTION, TESTING, PREPARATION, RESTORATION AND REPAIRS AS INDICATED.
2. THE WORK CONSISTS OF CLEANING AND DRYING THE INFLUENT JUNCTION BOXES, CHANNELS AND WET WELLS SO THE EXISTING LINER CAN BE ACCESSED BY THE CONCRETE PROTECTIVE COATING MANUFACTURER OR THEIR APPLICATOR (MANUFACTURER). IF THE MANUFACTURER DETERMINE THAT THE LINER IS COMPROMISED AND REQUIRES REPLACEMENT. CONTRACTOR SHALL REMOVE THE ENTIRE EXISTING LINER OR COATING (IF ANY). THEN, THE WORK CONSISTS OF INSPECTION, COMPRESSION AND PH TESTING, HIGH-PRESSURE-WASH (HYDRO-BLAST) CLEANING OF ALL INTERIOR WALLS FOLLOWED BY PRIMING BARE METALS (REBAR), RESURFACING ERODED/DAMAGED CONCRETE, AND RECOATING OR LINING; REPAIRING SPALLED AREAS; CLEANING, FILLING, AND SEALING OF CRACKS; AND REPLACEMENT OF ANY CORRODED REINFORCING STEEL. THIS SHALL INCLUDE REPAIRS TO ANY DAMAGE TO ANY NEW OR EXISTING CONCRETE OR CONCRETE SURFACES WHICH RESULTS FROM OTHER ACTIVITIES REQUIRED UNDER THIS CONTRACT OR WHICH EXISTED PREVIOUSLY AND IDENTIFIED TO BE REPAIRED OR DISCOVERED TO BE DETERIORATED IN THE COURSE OF THIS PROJECT.
3. THE CONTRACTOR SHALL UTILIZE A LICENSED NON DESTRUCTIVE TESTING FIRM (NDT FIRM) AND A SPECIALTY CONCRETE REPAIR AND REHABILITATION SUBCONTRACTOR (SCRR) (THE NDT AND SCRR CAN BE THE SAME COMPANY) TO COMPLETE THIS WORK.
4. CONTRACTOR SHALL SCHEDULE AN INSPECTION OF THE INTERIOR CONCRETE SURFACES TO BE REHABILITATED.
   A. THIS INSPECTION SHALL OCCUR AFTER THE REMOVAL OF EXISTING LINERS AND COATINGS AND THE STRUCTURE HAS BEEN CLEANED AND DRIED.
   B. THIS INSPECTION SHALL INCLUDE THE CONTRACTOR, NDT FIRM, SCRR, AND THE ENGINEER.
   C. FOLLOWING THE INSPECTION AND IF NECESSARY, AGREED LOCATIONS FOR COMPRESSIVE STRENGTH TESTING SHALL BE DETERMINED. TEST LOCATION(S) WILL BE SELECTED BASED ON THE INSPECTION. FOR THE PURPOSES OF BIDDING, THE CONTRACTOR'S BID SHALL INCLUDE 12 WINDSOR HP PROBE TESTS (ASTM C803).
5. THE CONTRACTOR, NDT FIRM, AND SCRR SHALL PRESENT A REPORT TO JEA AND THE ENGINEER. IT SHALL INCLUDE:
   A. SUMMARY OF THE CONDITION OF THE CONCRETE.
   B. COMPRESSION AND PH TESTING RESULTS. THE MINIMUM SURFACE PH SHALL BE AS LISTED IN SPECIFICATION SECTION 099724.
   C. RECOMMENDED REPAIR METHODS. THIS SHALL INCLUDE A LISTING EACH INSTANCE OF EACH TYPE OF REPAIR (SEE LIST OF TYPES A-E REPAIR AND REHABILITATION REQUIREMENTS NOTE 2 ON SHEET S-10).
   D. COST SCHEDULE FOR THE RECOMMENDED REPAIRS THAT ALIGNS WITH THE REPAIR TYPES A-E IN SECTION 448.
   E. THE NDT FIRM'S PORTION OF THE REPORT SHALL BE SIGNED AND SEALED BY A REGISTERED FLORIDA PROFESSIONAL ENGINEER.
   F. THE REPORT WILL BE SUBMITTED AS A SHOP DRAWING AND WILL BE REVIEWED BY THE ENGINEER AS A SHOP DRAWING.
6. IF THERE IS EVIDENCE OF PROTECTIVE COATING FAILURE INCLUDING DELAMINATION OR OTHER BREACH OF THE PROTECTIVE COATING, CONTRACTOR SHALL REMOVE THE EXISTING PROTECTIVE COATING.
7. CONTRACTOR SHALL COMPLY WITH JEA WATER AND WASTEWATER STANDARDS SECTION 446, 447, AND 448. THE WORK WILL ADDRESS SIX TYPES OF REPAIRS. TYPES A-E AS LISTED IN SECTION 448
8. SCRR QUALIFICATIONS
   A. CONTRACTOR SHALL ENGAGE A SPECIALTY CONCRETE REPAIR AND REHABILITATION (SCRR) SUBCONTRACTOR THAT SHALL HAVE BEEN LICENSED IN THE STATE OF FLORIDA FOR NOT LESS THAN 5 YEARS AND BE CERTIFIED, APPROVED, AND/OR TRAINED BY THE MANUFACTURER OF ANY REPAIR PRODUCTS AND COATINGS TO BE USED FOR CONCRETE RESTORATION AND COATINGS.
   B. THE SCRR SHALL EMPLOY AN SPCC QUALITY CONTROL SUPERVISOR (QCS) AND CONCRETE COATING INSPECTOR (CCI) TO SUPERVISE THE WORK.
   C. THE SCRR SHALL EMPLOY A NACE CERTIFIED COATING INSPECTOR (CIP) – LEVEL 3.
   D. A PRE-INSTALLATION MEETING SHALL BE HELD WITH THIS SPECIALTY SUBCONTRACTOR, THE APPLICATOR, MATERIAL SUPPLIER, AND REPRESENTATIVE(S) FROM JEA.
   E. THE NDT FIRM SHALL BE LICENSED IN THE STATE OF FLORIDA.
9. THE MANUFACTURER SHALL APPROVE SURFACE PREPARATION BY SPECIALTY CONCRETE REPAIR AND REHABILITATION SUBCONTRACTOR (SCRR) PRIOR TO THE PRODUCT APPLICATION
10. CONTRACTOR SHALL INSPECT THE INFLUENT JUNCTION BOXES, CHANNELS AND WET WELLS AS FOLLOW:
    A. CONTRACTOR AND SCRR SUBCONTRACTOR SHALL EVALUATE STRUCTURES AND CONDUCT SURFACE PREPARATIONS AND TESTING AS NECESSARY TO ASSESS THE CONDITION OF THE STRUCTURES, MAKE RECOMMENDATIONS ON THE REPAIR METHOD, AND PROVIDE QUANTITIES FOR EACH REPAIR METHOD FOR EACH STRUCTURE.
    B. ONCE THE SCRR REPORT IS APPROVED BY THE ENGINEER AND JEA, THE CONTRACTOR AND THEIR SCRR SUBCONTRACTOR SHALL EXAMINE THE STRUCTURES, EXISTING LINERS, SUBSTRATE AND THE CONDITIONS UNDER WHICH WORK IS TO BE PERFORMED FOR COMPLIANCE WITH REQUIREMENTS FOR SURFACE PREPARATION AND NOTIFY JEA IN WRITING OF UNSATISFACTORY CONDITIONS. DO NOT PROCEED WITH THE WORK UNTIL UNSATISFACTORY CONDITIONS HAVE BEEN CORRECTED IN A MANNER ACCEPTABLE TO JEA AND THE ENGINEER AND MANUFACTURER.

| REV. NO. | DATE | DRWN | CHKD | REMARKS |
|---|---|---|---|---|

DESIGNED BY: E. RIVERA
DRAWN BY: M. TRAPP
SHEET CHK'D BY: K. FRANCOFORTE
CROSS CHK'D BY: R. HAGAMAN
APPROVED BY: E. RIVERA
DATE: JANUARY 2020

CDM Smith
4651 Salisbury Road, Suite 420
Jacksonville, FL 32256
Tel: (904) 731-7109
FL COA No. EB-0000020

JEA

WILSON BLVD. (180-45) AND 118th ST. (180-47)
MASTER PUMP STATION IMPROVEMENTS

WILSON BLVD.
LOWER LEVEL MODIFICATION PLAN

PROJECT NO. 6103-234169
FILE NAME: SWZ002PS.RVT
SHEET NO. S-3

60% SUBMITTAL - NOT FOR CONSTRUCTION

© 2019 CDM SMITH ALL RIGHTS RESERVED.
REUSE OF DOCUMENTS: THESE DOCUMENTS AND DESIGNS PROVIDED BY PROFESSIONAL SERVICE, INCORPORATED HEREIN, ARE THE PROPERTY OF CDM SMITH AND ARE NOT TO BE USER, IN WHOLE OR PART, FOR ANY OTHER PROJECT WITHOUT THE WRITTEN AUTHORIZATION OF CDM SMITH.

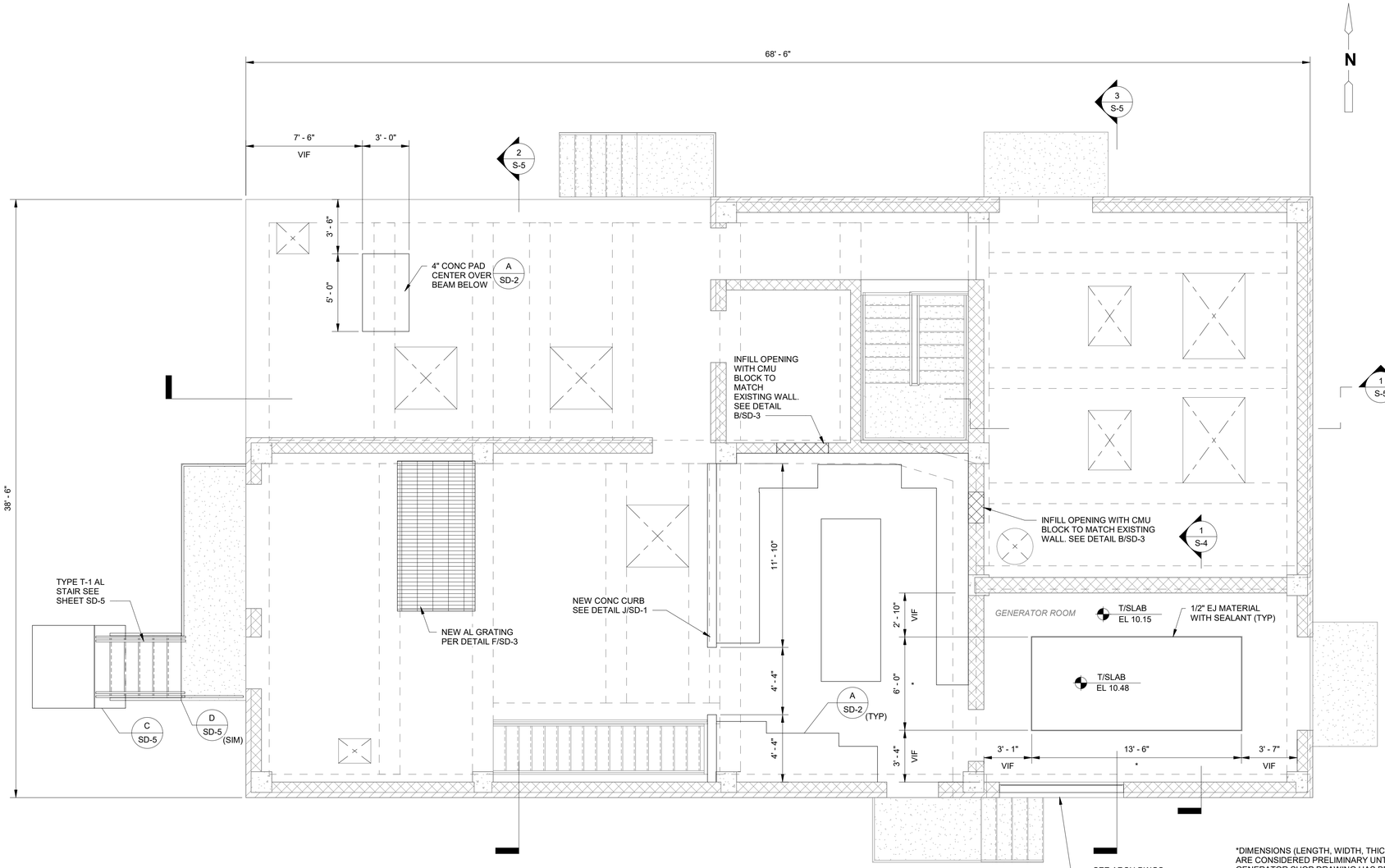


## UPPER LEVEL MODIFICATION PLAN

1/4" = 1'-0"

*DIMENSIONS (LENGTH, WIDTH, THICKNESS) ARE CONSIDERED PRELIMINARY UNTIL GENERATOR SHOP DRAWING HAS BEEN SUBMITTED TO AND APPROVED BY THE ENGINEER. FINAL DIMENSIONS, IF DIFFERENT THAN SHOWN HERE, WILL BE PROVIDED AFTER FINAL GENERATOR SUBMITTAL IS APPROVED.

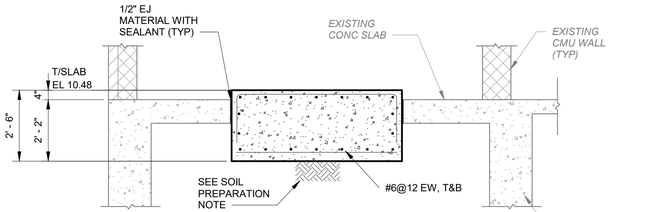


## 1 SECTION

3/8" = 1'-0"

SOIL PREPARATION NOTE:

COMPACT 12" LAYER OF SUBGRADE SOIL TO 95% MODIFIED PROCTOR DENSITY IN ACCORDANCE WITH ASTM D1557

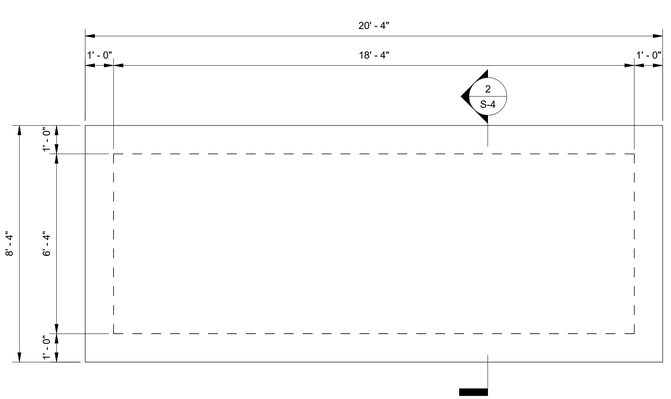


## FUEL TANK PAD

3/8" = 1'-0"

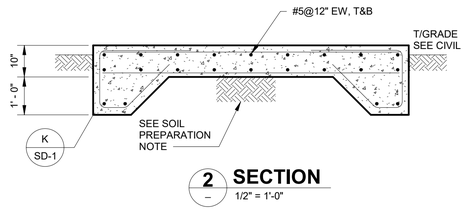


## 2 SECTION

1/2" = 1'-0"

© 2019 CDM SMITH ALL RIGHTS RESERVED.
REUSE OF DOCUMENTS: THEESE DOCUMENTS AND DESIGNS PROVIDED BY PROFESSIONAL SERVICE, INCORPORATED HEREIN, ARE THE PROPERTY OF CDM SMITH AND ARE NOT TO BE USER, IN WHOLE OR PART, FOR ANY OTHER PROJECT WITHOUT THE WRITTEN AUTHORIZATION OF CDM SMITH.

| REV. NO. | DATE | DRWN | CHKD | REMARKS |
|---|---|---|---|---|

DESIGNED BY: M. TRAPP
DRAWN BY: M. TRAPP
SHEET CHK'D BY: K. FRANCOFORTE
CROSS CHK'D BY: R. HAGAMAN
APPROVED BY: E. RIVERA
DATE: JANUARY 2020

CDM Smith
4651 Salisbury Road, Suite 420
Jacksonville, FL 32256
Tel: (904) 731-7109
FL COA No. EB-0000020

JEA

WILSON BLVD. (180-45) AND 118th ST. (180-47)
MASTER PUMP STATION IMPROVEMENTS

WILSON BLVD.
MODIFICATION PLANS AND SECTIONS

PROJECT NO. 6103-234169
FILE NAME: SWZ002PS.RVT
SHEET NO. S-4

60% SUBMITTAL - NOT FOR CONSTRUCTION

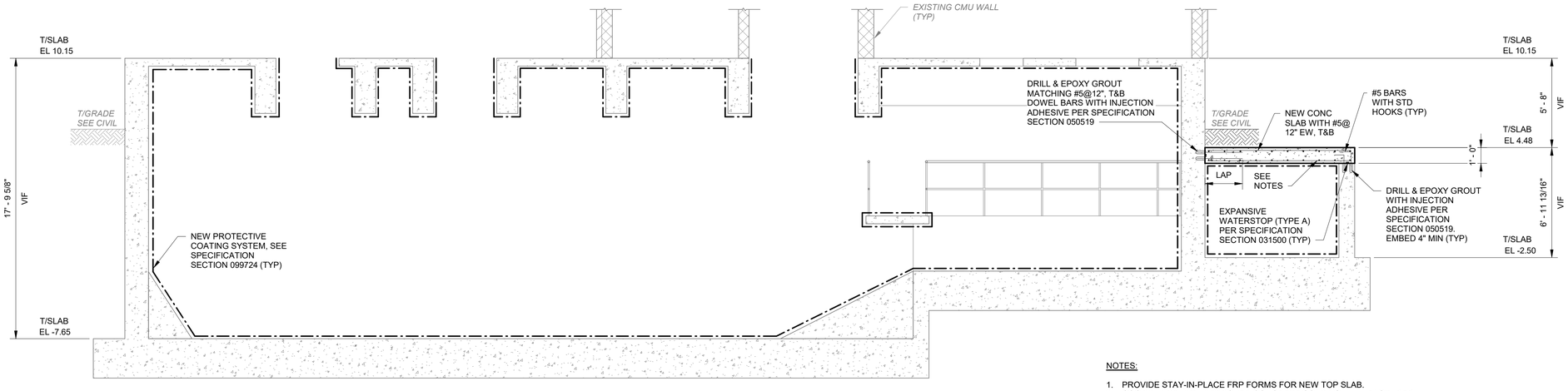


NOTES:

1. PROVIDE STAY-IN-PLACE FRP FORMS FOR NEW TOP SLAB.
2. COORDINATE WITH APPROVED CONCRETE COATING MANUFACTURER THE COATING REQUIRED ON THE FRP FORMS' UNDERSIDE AND THE JOINT BETWEEN THE FRP FORMS AND CONCRETE WALLS.

**1 SECTION**
S-3 1/4" = 1'-0"

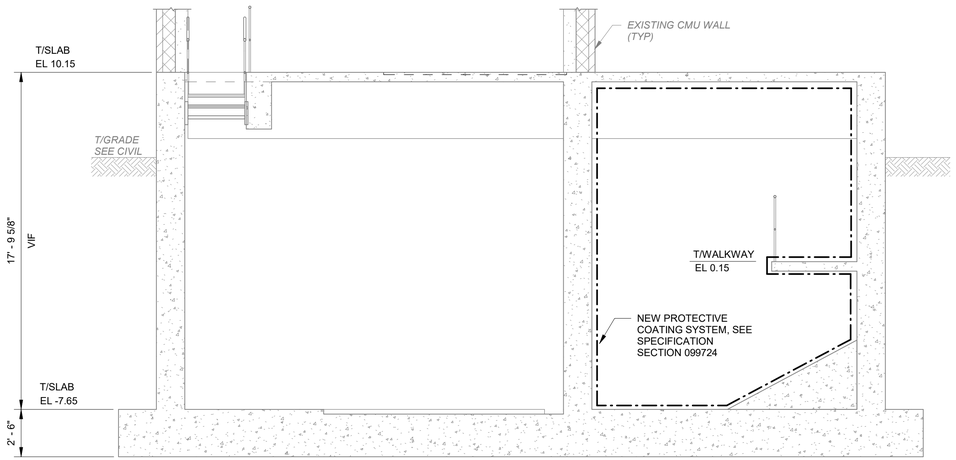


**2 SECTION**
S-3 1/4" = 1'-0"

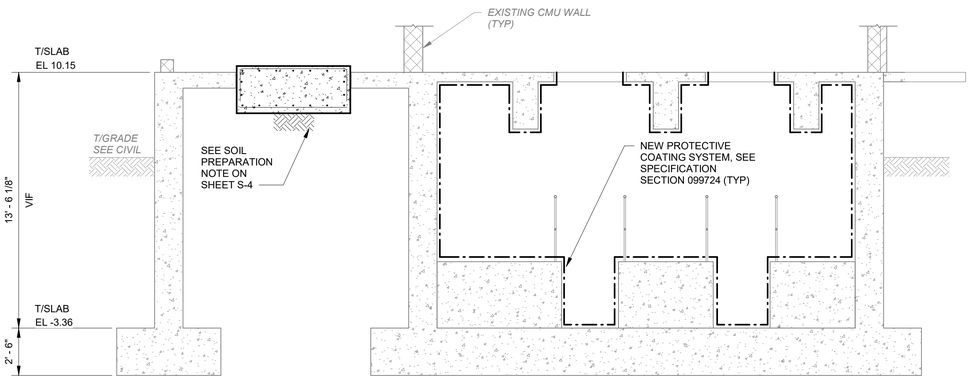


**3 SECTION**
S-3 1/4" = 1'-0"

| REV. NO. | DATE | DRWN | CHKD | REMARKS |
|---|---|---|---|---|
| | | | | |

DESIGNED BY: E. RIVERA
DRAWN BY: M. TRAPP
SHEET CHK'D BY: K. FRANCOFORTE
CROSS CHK'D BY: R. HAGAMAN
APPROVED BY: E. RIVERA
DATE: JANUARY 2020

CDM Smith
4651 Salisbury Road, Suite 420
Jacksonville, FL 32256
Tel: (904) 731-7109
FL COA No. EB-0000020

JEA

WILSON BLVD. (180-45) AND 118th ST. (180-47)
MASTER PUMP STATION IMPROVEMENTS

WILSON BLVD.
SECTIONS AND DETAILS

PROJECT NO. 6103-234169
FILE NAME: SWZ002PS.RVT
SHEET NO.
S-5

60% SUBMITTAL - NOT FOR CONSTRUCTION

© 2019 CDM SMITH ALL RIGHTS RESERVED.
REUSE OF DOCUMENTS: THESE DOCUMENTS AND DESIGNS PROVIDED BY PROFESSIONAL SERVICE, INCORPORATED HEREIN, ARE THE PROPERTY OF CDM SMITH AND ARE NOT TO BE USER, IN WHOLE OR PART, FOR ANY OTHER PROJECT WITHOUT THE WRITTEN AUTHORIZATION OF CDM SMITH.

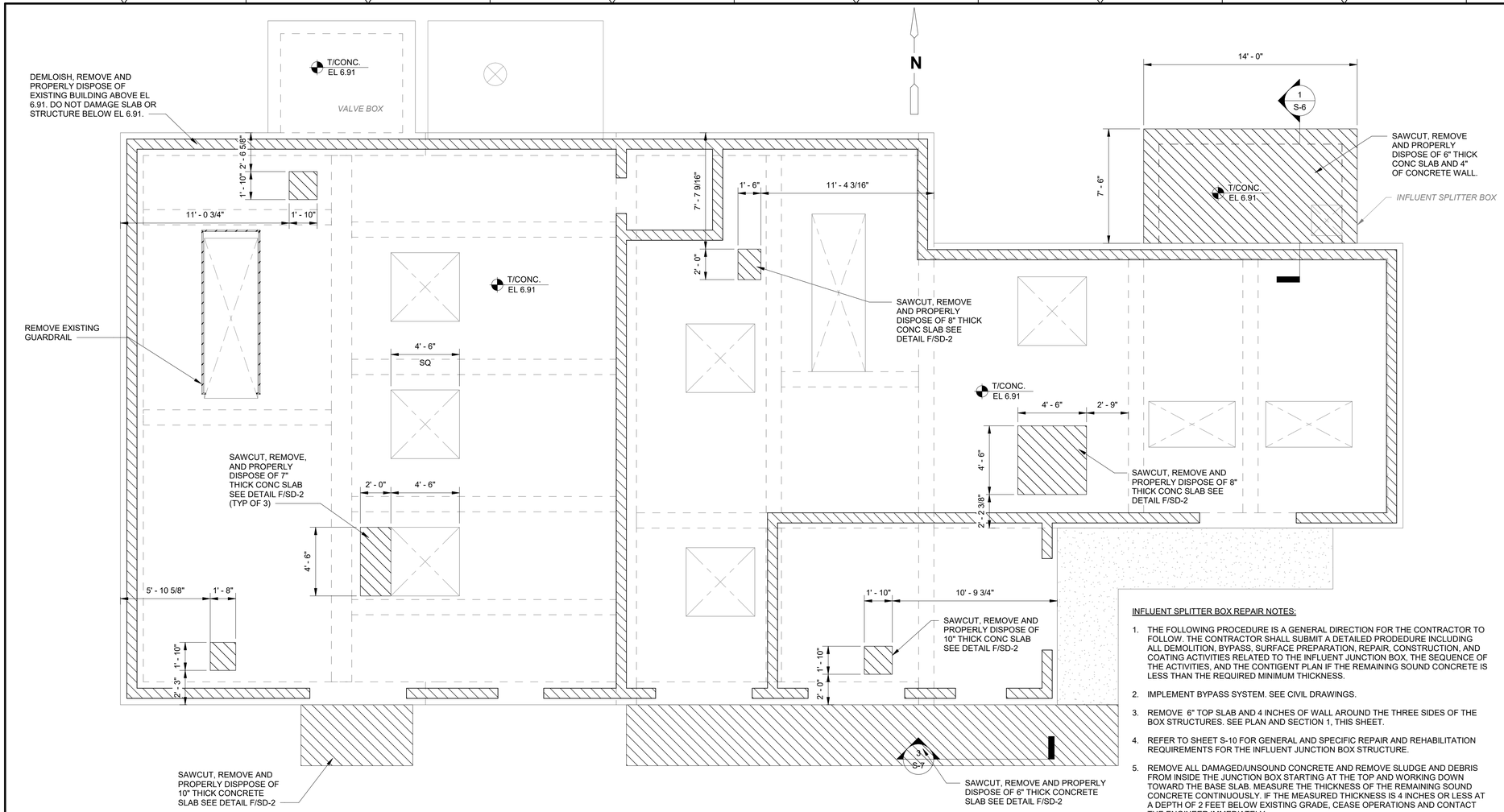


## UPPER LEVEL DEMOLITION PLAN

1/4" = 1'-0"

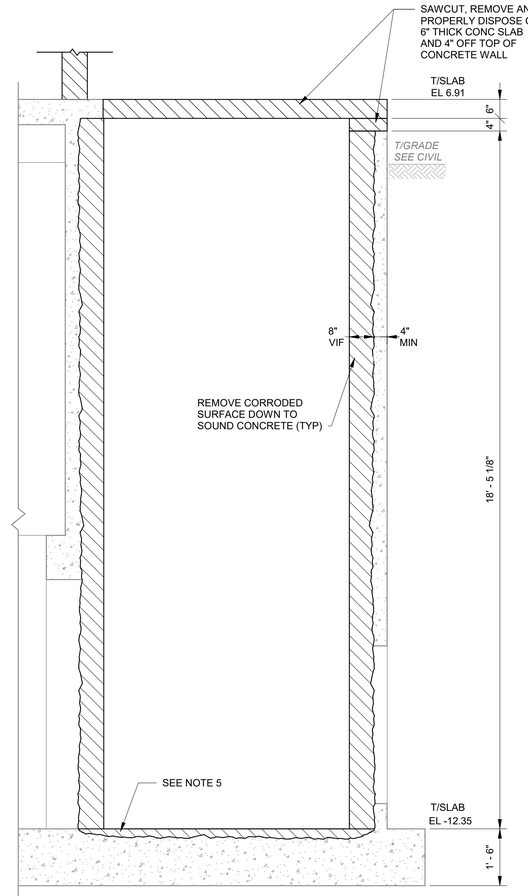


## 1 SECTION

1/2" = 1'-0"

INFLUENT SPLITTER BOX REPAIR NOTES:

1. THE FOLLOWING PROCEDURE IS A GENERAL DIRECTION FOR THE CONTRACTOR TO FOLLOW. THE CONTRACTOR SHALL SUBMIT A DETAILED PRODEDURE INCLUDING ALL DEMOLITION, BYPASS, SURFACE PREPARATION, REPAIR, CONSTRUCTION, AND COATING ACTIVITIES RELATED TO THE INFLUENT JUNCTION BOX, THE SEQUENCE OF THE ACTIVITIES, AND THE CONTIGENT PLAN IF THE REMAINING SOUND CONCRETE IS LESS THAN THE REQUIRED MINIMUM THICKNESS.
2. IMPLEMENT BYPASS SYSTEM. SEE CIVIL DRAWINGS.
3. REMOVE 6" TOP SLAB AND 4 INCHES OF WALL AROUND THE THREE SIDES OF THE BOX STRUCTURES. SEE PLAN AND SECTION 1, THIS SHEET.
4. REFER TO SHEET S-10 FOR GENERAL AND SPECIFIC REPAIR AND REHABILITATION REQUIREMENTS FOR THE INFLUENT JUNCTION BOX STRUCTURE.
5. REMOVE ALL DAMAGED/UNSOUND CONCRETE AND REMOVE SLUDGE AND DEBRIS FROM INSIDE THE JUNCTION BOX STARTING AT THE TOP AND WORKING DOWN TOWARD THE BASE SLAB. MEASURE THE THICKNESS OF THE REMAINING SOUND CONCRETE CONTINUOUSLY. IF THE MEASURED THICKNESS IS 4 INCHES OR LESS AT A DEPTH OF 2 FEET BELOW EXISTING GRADE, CEASE OPERATIONS AND CONTACT THE ENGINEER IMMEDIATELY.
6. PROVIDE BRACING AS NEEDED TO STABILIZE STRUCTURE FROM SOIL PRESSURE.
7. IF 8 INCHES OR MORE SOUND CONCRETE REMAIN ON ALL WALLS, PROCEED WITH REPAIR AND REHABILITATION REQUIREMENTS NOTE 2 ON SHEET S-10.
8. IF 4 INCHES MINIMUM WALL THICKNESS OF SOUND CONCRETE REMAINS, CONTINUE WITH THE FOLLOWING NOTES. OTHERWISE, THE STRUCTURE SHALL NOT BE REPAIRED AND SHALL BE COMPLETELY REMOVED/REPLACED.
9. NOTIFY THE ENGINEER IF THE BASE SLAB TOP REINFORCING MAT IS EXPOSED OR DETERIORATED AND SUBMIT PROPOSED REPAIR/REPLACEMENT FOR APPROVAL. REFER TO REPAIR AND REHABILITATION REQUIREMENTS NOTE 4-B ON SHEET S-10 FOR REPAIRS WITH EXPOSED REINFORCING.
10. REPLACE INSIDE-FACE REINFORCING STEEL MAT WITH #6@6" HORIZONTAL AND CORNER BARS. DRILL & EPOXY #6@6" DOWEL 5" INTO BASE SLAB WITH INJECTION ADHESIVE PER SPECIFICATION SECTION 050519 AND PROVIDE 40 INCH LAP LENGTH WITH #6@12" VERTICAL BARS.
11. ASSEMBLE FORMWORK ON THE INSIDE FACE OF THE WALL IN ACCORDANCE TO SPECIFICATION SECTION 031000. TOTAL WALL THICKNESS SHALL BE 12 INCHES.
12. APPLY EPOXY BONDING AGENT TO INSIDE FACE OF EXISTING SOUND, CLEAN CONCRETE PER SPECIFICATION SECTION 030130.71.
13. PLACE NEW STRUCTURAL CONCRETE PER SPECIFICATION SECTION 033000.
14. AFTER CONCRETE HAS CURED AND FORWORK IS REMOVED, TEST SURFACE PH, PREPARE SURFACE, AND APPLY PROTECTIVE COATING SYSTEM PER SPECIFICATION SECTION 099724 AND THE MANUFACTURER RECOMMENDATIONS.
15. AFTER TOP SLAB AND REINFORCING HAS BEEN PLACED AND CONCRETE HAS CURED, APPLY PROTECTIVE COATING SYSTEM TO TESTED AND PREPARED UNDERSIDE OF TOP SLAB. FOLLOW MANUFACTURER'S RECOMMENDATIONS FOR SEALING THE COATING SYSTEM JOINT BETWEEN THE WALLS AND SLAB.

INFLUENT SPLITTER BOX ALTERNATE HDPE INSERT SOLUTION:

1. FOLLOW INFLUENT SPLITTER BOX REPAIR NOTES 2 THROUGH 4.
2. INSERT PREFABRICATED HDPE ASSEMBLY INTO INFLUENT SPLITTER BOX AFTER SLUDGE REMOVAL AND SURFACE PREPARATION PER THE MANUFACTURER'S REQUIREMENTS.
3. THE HDPE INSERT ASSEMBLY SHALL HAVE THE FOLLOWING INSIDE DIMENSIONS: 11'-4" x 5'-10".
4. AFTER THE ASSEMBLY HAS BEEN FULLY SECURED PER THE MANUFACTURER'S DIRECTION, PLACE CONCRETE GROUT BETWEEN THE ASSEMBLY AND THE EXISTING CONCRETE WALLS.
5. THE ASSEMBLY SHALL BE FABRICATED TO MATCH THE EXISTING PIPE OPENINGS IN THE NORTH AND SOUTH WALLS. SEAL THE OPENING PER THE MANUFACTURER'S REQUIREMENTS.
6. PRIOR TO THE FABRICATION AND PURCHASE OF THE ASSEMBLY, SUBMIT SHOP DRAWINGS WITH DIMENSIONS AND CONNECTION DETAILS AT THE BASE, PIPE OPENINGS, AND TOP OF THE BOX TO THE ENGINEER FOR REVIEW AND APPROVAL. HDPE ASSEMBLY DESIGN SHALL BE SIGNED AND SEALED BY A PROFESSIONAL ENGINEER REGISTERED IN THE STATE OF FLORIDA.

| REV. NO. | DATE | DRWN | CHKD | REMARKS |
|---|---|---|---|---|
| | | | | |

DESIGNED BY: M. TRAPP
DRAWN BY: M. TRAPP
SHEET CHK'D BY: K. FRANCOFORTE
CROSS CHK'D BY: R. HAGAMAN
APPROVED BY: E. RIVERA
DATE: JANUARY 2020

CDM Smith
4651 Salisbury Road, Suite 420
Jacksonville, FL 32256
Tel: (904) 731-7109
FL COA No. EB-0000020

JEA

WILSON BLVD. (180-45) AND 118th ST. (180-47)
MASTER PUMP STATION IMPROVEMENTS

118TH STREET
DEMOLITION PLAN AND SECTION

PROJECT NO. 6103-234169
FILE NAME: SWZ001PS.RVT

SHEET NO.
S-6

60% SUBMITTAL - NOT FOR CONSTRUCTION

© 2019 CDM SMITH ALL RIGHTS RESERVED.
REUSE OF DOCUMENTS: THEESE DOCUMENTS AND DESIGNS PROVIDED BY PROFESSIONAL SERVICE, INCORPORATED HEREIN, ARE THE PROPERTY OF CDM SMITH AND ARE NOT TO BE USER, IN WHOLE OR PART, FOR ANY OTHER PROJECT WITHOUT THE WRITTEN AUTHORIZATION OF CDM SMITH.

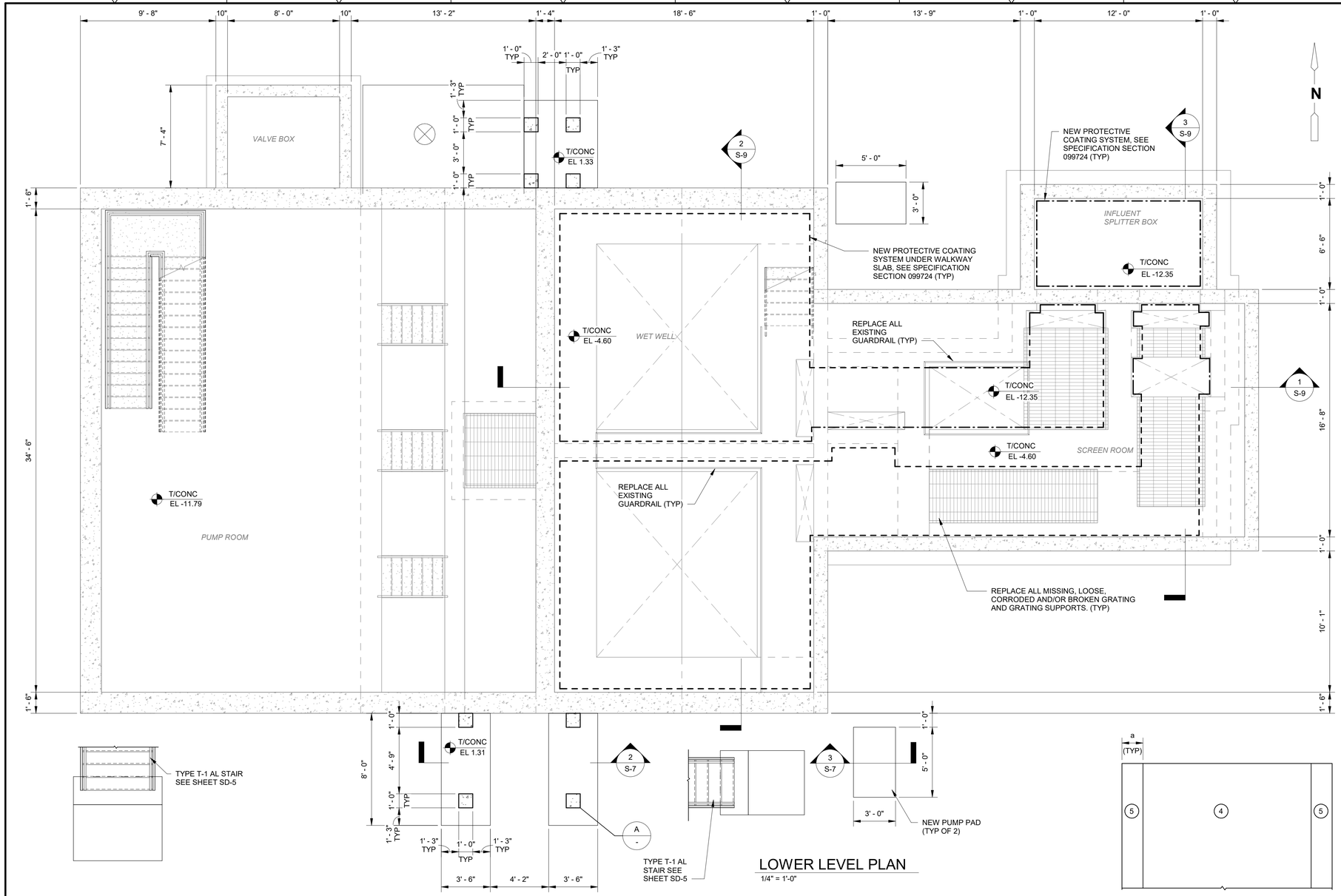


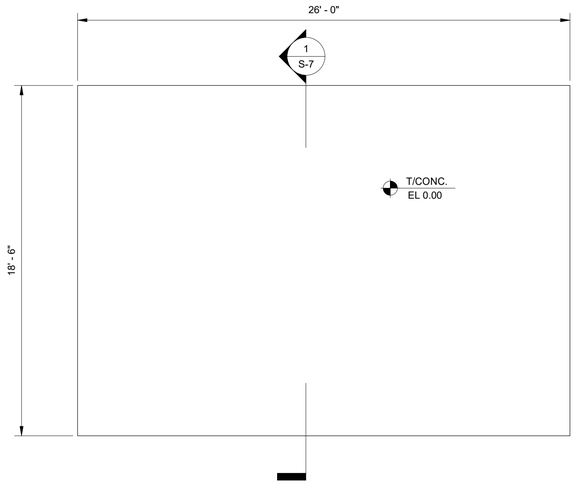


## GENERATOR PAD
1/4" = 1'-0"

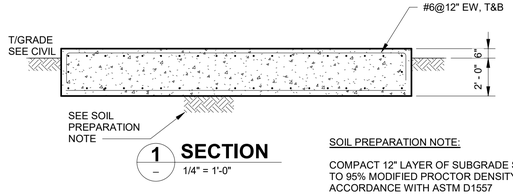


## 1 SECTION
1/4" = 1'-0"

SOIL PREPARATION NOTE:

COMPACT 12" LAYER OF SUBGRADE SOIL TO 95% MODIFIED PROCTOR DENSITY IN ACCORDANCE WITH ASTM D1557







## LOWER LEVEL PLAN
1/4" = 1'-0"




## ELEVATION
NTS

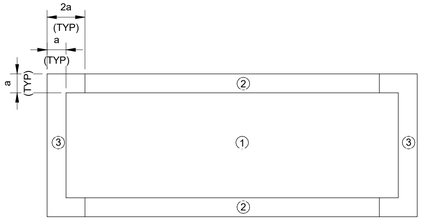


COMPONENTS AND CLADDING ROOF ZONE DIAGRAM

## PLAN
NTS

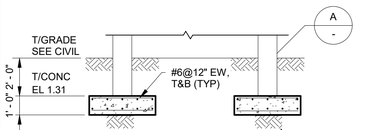


## 2 SECTION
1/4" = 1'-0"

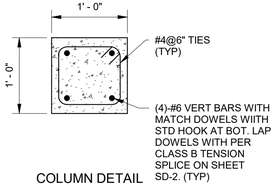


COLUMN DETAIL

## A DETAIL
NTS

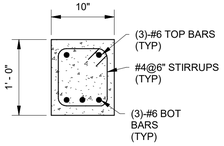


BEAM DETAIL

## B DETAIL
NTS

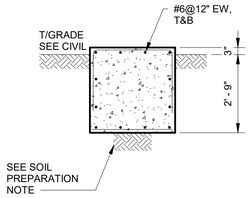


## 3 SECTION
3/8" = 1'-0"

ELECTRICAL BUILDING AND FRP ENCLOSURE WIND PRESSURE NOTES:

1. BUILDING SHALL BE DESIGNED AS ENCLOSED PER FBC WITH THE ULTIMATE DESIGN WIND SPEED OF 135 MPH.
2. FOR ASD PRESSURES, APPLY A FACTOR OF 0.6 TO THE LISTED PRESSURES CORRESPONDING TO $V_{ULT}$.
3. ZONE WIDE DIMENSIONS, a = 3'-0" (ROOF AND WALLS)

**WIND PRESSURE (PSF) FOR COMPONENT AND CLADDING (Vult)**

| EFFECTIVE WIND AREA (SQ. FT.) | PRESSURE (+) / SUCTION (-) | | | | | | | | | |
|---|---|---|---|---|---|---|---|---|---|---|
| | ROOF (PSF) | | | | | | WALL (PSF) | | | |
| | ZONE 1 | | ZONE 2 | | ZONE 3 | | ZONE 4 | | ZONE 5 | |
| < 10.00 | 16 | -40 | 16 | -67 | 16 | -100 | 36 | -39 | 36 | -49 |
| 10 TO 20 | 16 | -40 | 16 | -67 | 16 | -100 | 36 | 39 | 36 | -49 |
| 20 TO 50 | 15 | -39 | 15 | -60 | 15 | -83 | 35 | -38 | 35 | -45 |
| 50 TO 100 | 14 | -37 | 14 | -50 | 14 | -60 | 33 | -36 | 33 | -41 |
| >= 100 | 13 | -36 | 13 | -43 | 13 | -43 | 31 | -34 | 31 | -38 |

| REV. NO. | DATE | DRWN | CHKD | REMARKS |
|---|---|---|---|---|

DESIGNED BY: E. RIVERA
DRAWN BY: M. TRAPP
SHEET CHK'D BY: K. FRANCOFORTE
CROSS CHK'D BY: R. HAGAMAN
APPROVED BY: E. RIVERA
DATE: JANUARY 2020

CDM Smith
4651 Salisbury Road, Suite 420
Jacksonville, FL 32256
Tel: (904) 731-7109
FL COA No. EB-0000020

JEA

WILSON BLVD. (180-45) AND 118th ST. (180-47)
MASTER PUMP STATION IMPROVEMENTS

118TH STREET LOWER LEVEL
PLAN AND DETAILS

PROJECT NO. 6103-234169
FILE NAME: SWZ001PS.RVT

SHEET NO.
S-7

60% SUBMITTAL - NOT FOR CONSTRUCTION

© 2019 CDM SMITH ALL RIGHTS RESERVED.
REUSE OF DOCUMENTS: THESE DOCUMENTS AND DESIGNS PROVIDED BY PROFESSIONAL SERVICE, INCORPORATED HEREIN, ARE THE PROPERTY OF CDM SMITH AND ARE NOT TO BE USER, IN WHOLE OR PART, FOR ANY OTHER PROJECT WITHOUT THE WRITTEN AUTHORIZATION OF CDM SMITH.

© 2019 CDM SMITH ALL RIGHTS RESERVED.
REUSE OF DOCUMENTS. THEESE DOCUMENTS AND DESIGNS PROVIDED BY PROFESSIONAL SERVICE. INCORPORATED HEREIN, ARE THE PROPERTY OF CDM SMITH AND ARE NOT TO BE USER. IN WHOLE OR PART. FOR ANY OTHER PROJECT WITHOUT THE WRITTEN AUTHORIZATION OF CDM SMITH.

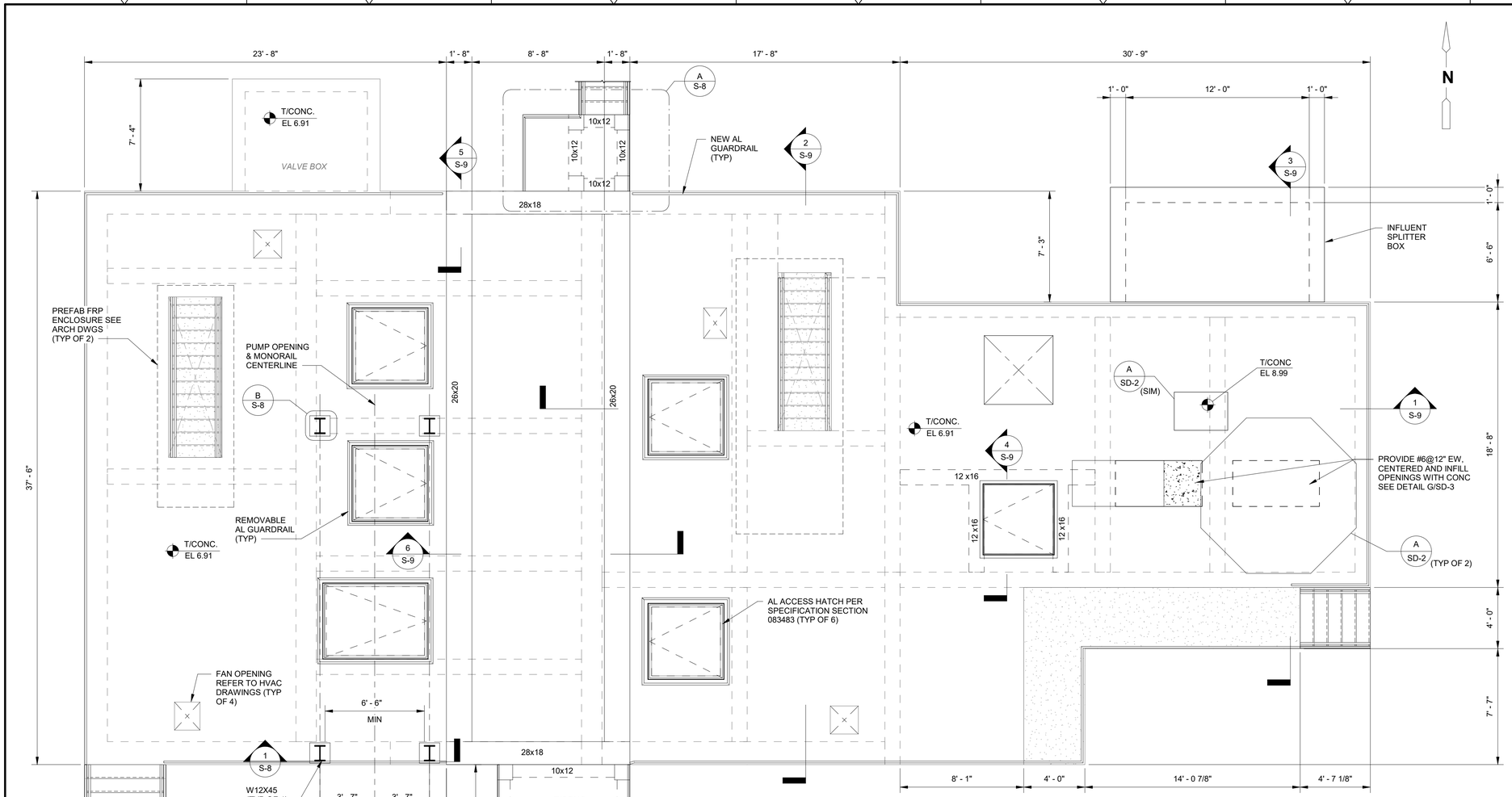


## UPPER LEVEL PLAN
1/4" = 1'-0"

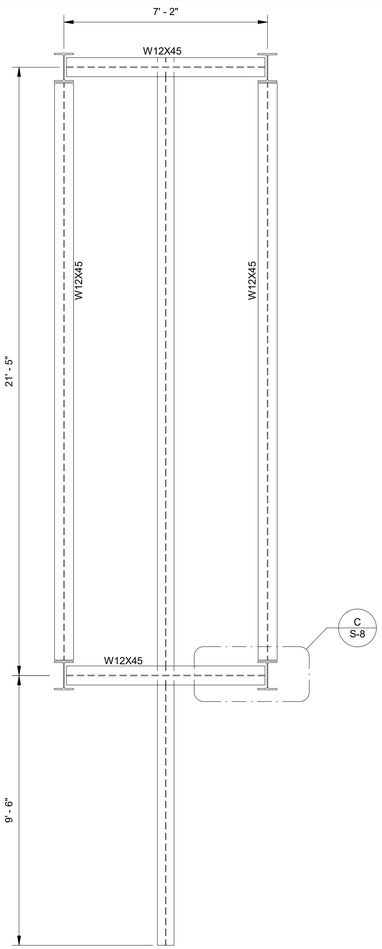


## MONORAIL UPPER LEVELPLAN
3/8" = 1'-0"

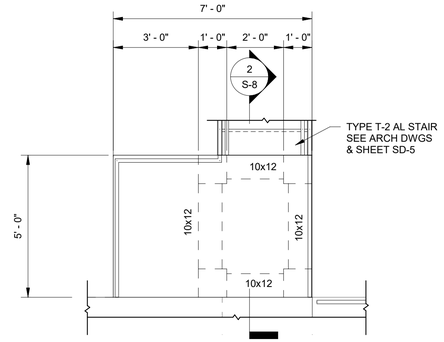


## A CONCRETE LANDING NORTH SIDE
3/8" = 1'-0"

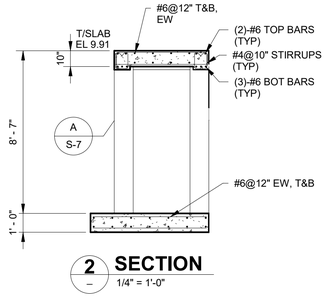


## 2 SECTION
1/4" = 1'-0"

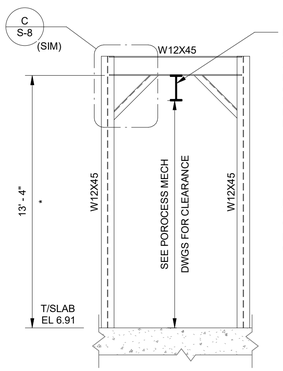


NOTE:
"COORDINATE DIMENSIONS WITH FINAL MONORAIL BEAM SIZE AND REQUIRED CLEARANCE.

## 1 SECTION
1/4" = 1'-0"

NOTE:
SEE SHEET S-7 FOR ON-GRADE PUMP PADS.

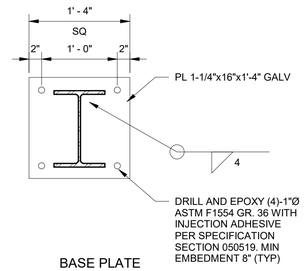


BASE PLATE

## B DETAIL
1" = 1'-0"

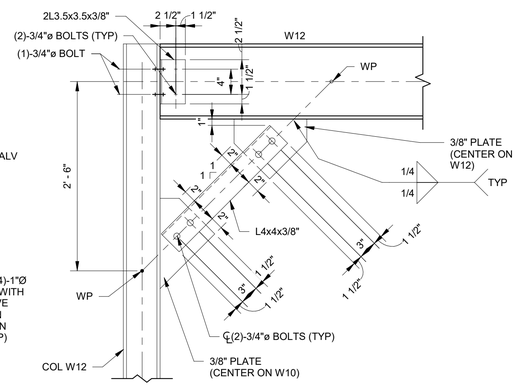


MONORAIL KNEE BRACE

## C DETAIL
1" = 1'-0"

| REV. NO. | DATE | DRWN | CHKD | REMARKS |
|---|---|---|---|---|
| | | | | |

DESIGNED BY: M. TRAPP
DRAWN BY: M. TRAPP
SHEET CHK'D BY: K. FRANCOFORTE
CROSS CHK'D BY: R. HAGAMAN
APPROVED BY: E. RIVERA
DATE: JANUARY 2020

CDM Smith
4651 Salisbury Road, Suite 420
Jacksonville, FL 32256
Tel: (904) 731-7109
FL COA No. EB-0000020

JEA

WILSON BLVD. (180-45) AND 118th ST. (180-47)
MASTER PUMP STATION IMPROVEMENTS

118TH STREET UPPER LEVEL
PLANS, SECTIONS AND DETAILS

PROJECT NO. 6103-234169
FILE NAME: SWZ001PS.RVT

SHEET NO.
S-8

60% SUBMITTAL - NOT FOR CONSTRUCTION

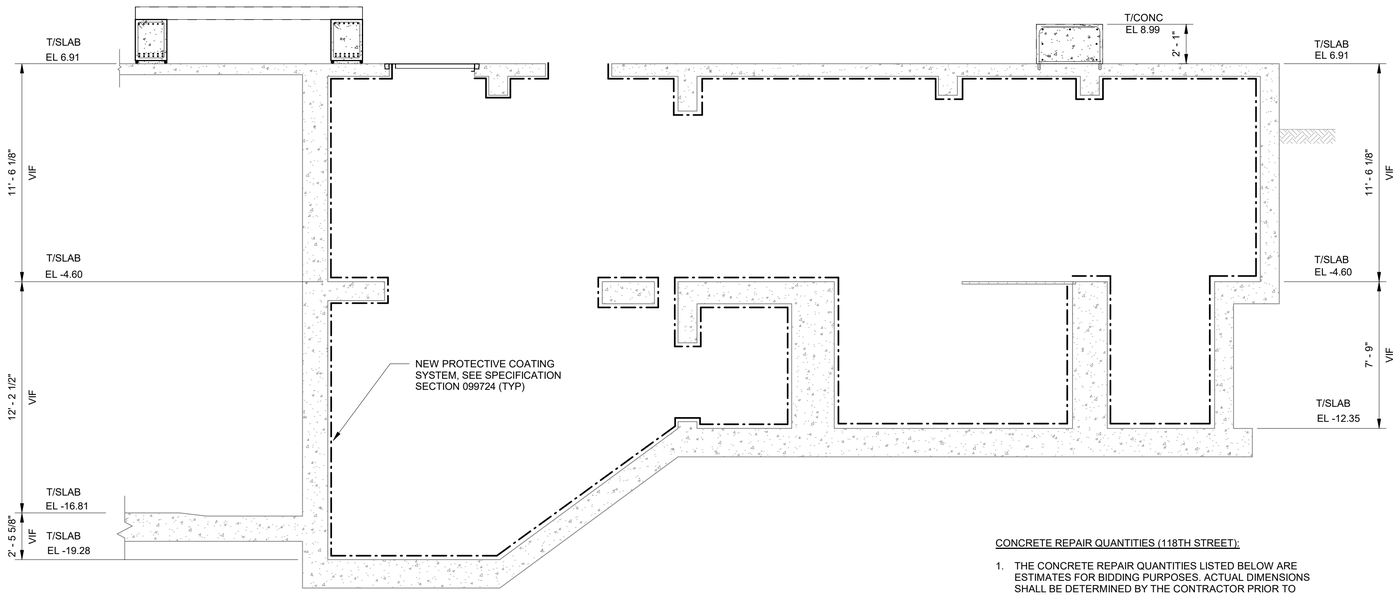


**1 SECTION** S-7 1/4" = 1'-0"

CONCRETE REPAIR QUANTITIES (118TH STREET):

1. THE CONCRETE REPAIR QUANTITIES LISTED BELOW ARE ESTIMATES FOR BIDDING PURPOSES. ACTUAL DIMENSIONS SHALL BE DETERMINED BY THE CONTRACTOR PRIOR TO CONTRUCTION.
2. THE CONTRACTOR SHALL NOTIFY THE ENGINEER THE DATE(S) WHEN THE QUANTITIES ARE MEASURED SO THAT THE ENGINEER IS PRESENT FOR OBSERVATION.
3. CONCRETE SURFACE REPAIRS: 330 SQUARE FEET
4. CONCRETE SURFACE REPAIRS WITH EXPOSED REBAR: 1345 SQUARE FEET
5. CONCRETE REPAIRS THAT INCLUDE REBAR REPLACMENT: 290 SQUARE FEET
6. CRACK REPAIRS: 200 LINEAR FEET

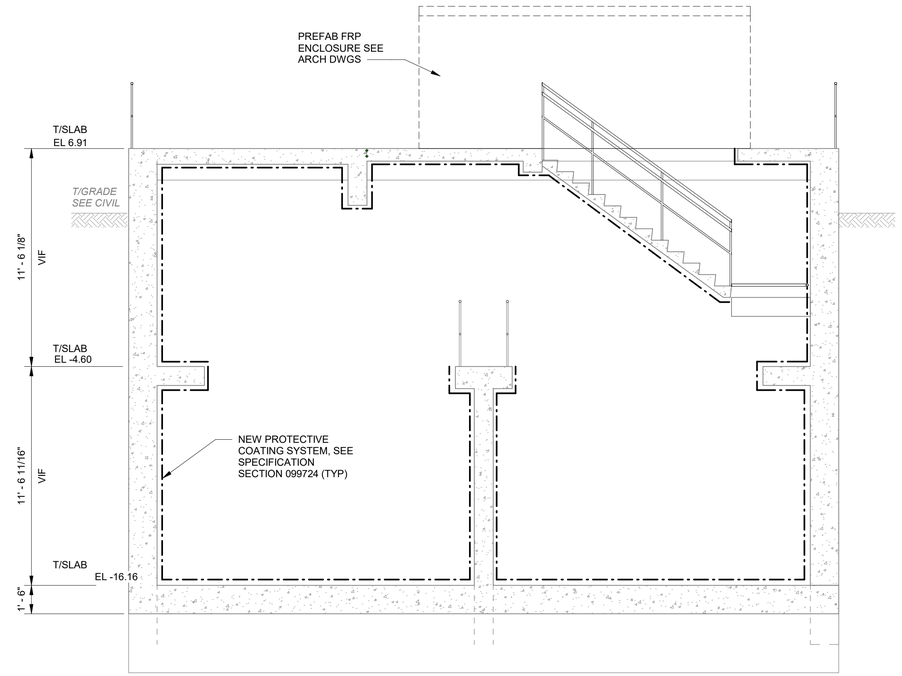


**2 SECTION** S-7 1/4" = 1'-0"

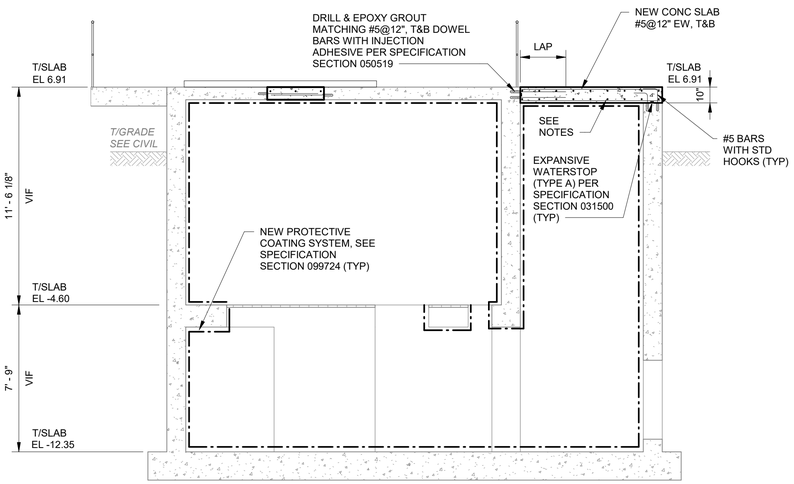


**3 SECTION** S-7 1/4" = 1'-0"

NOTES:

1. PROVIDE STAY-IN-PLACE FRP FORMS FOR NEW TOP SLAB.
2. COORDINATE WITH APPROVED CONCRETE COATING MANUFACTURER THE COATING REQUIRED ON THE FRP FORMS' UNDERSIDE AND THE JOINT BETWEEN THE FRP FORMS AND CONCRETE WALLS.

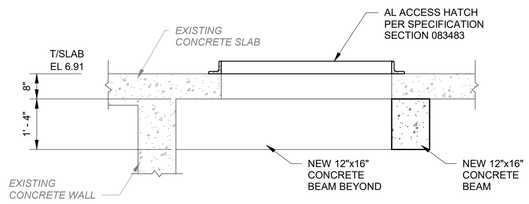


**4 SECTION** S-8 1/2" = 1'-0"

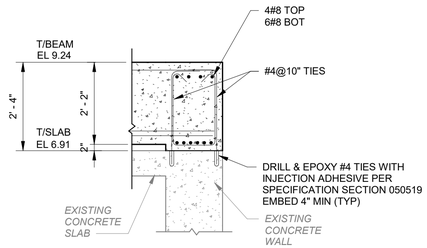


**5 SECTION** S-8 1/2" = 1'-0"

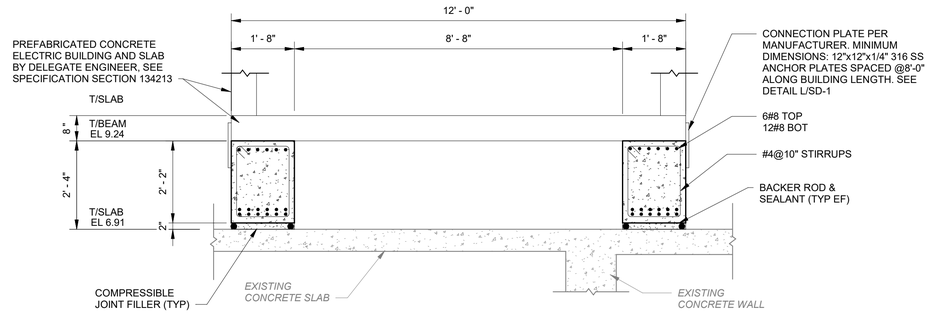


**6 SECTION** S-8 1/2" = 1'-0"

© 2019 CDM SMITH ALL RIGHTS RESERVED.
REUSE OF DOCUMENTS: THESE DOCUMENTS AND DESIGNS PROVIDED BY PROFESSIONAL SERVICE, INCORPORATED HEREIN, ARE THE PROPERTY OF CDM SMITH AND ARE NOT TO BE USER, IN WHOLE OR PART, FOR ANY OTHER PROJECT WITHOUT THE WRITTEN AUTHORIZATION OF CDM SMITH.

| REV. NO. | DATE | DRWN | CHKD | REMARKS |
|---|---|---|---|---|

DESIGNED BY: M. TRAPP
DRAWN BY: M. TRAPP
SHEET CHK'D BY: K. FRANCOFORTE
CROSS CHK'D BY: R. HAGAMAN
APPROVED BY: E. RIVERA
DATE: JANUARY 2020

CDM Smith
4651 Salisbury Road, Suite 420
Jacksonville, FL 32256
Tel: (904) 731-7109
FL COA No. EB-0000020

JEA

WILSON BLVD. (180-45) AND 118th ST. (180-47)
MASTER PUMP STATION IMPROVEMENTS

118TH STREET
SECTIONS AND DETAILS

PROJECT NO. 6103-234169
FILE NAME: SWZ001PS.RVT
SHEET NO. S-9

60% SUBMITTAL - NOT FOR CONSTRUCTION

REPAIR AND REHABILITATION REQUIREMENTS:

1. GENERAL REQUIREMENTS

   A. FOR CONCRETE SURFACE PREPARATION FOR CONCRETE REPAIR, THE CONTRACTOR SHALL FOLLOW INTERNATIONAL CONCRETE REPAIR INSTITUTE (ICRI) TECHNICAL GUIDELINE NO. 310.1R-2008 (FORMERLY NO. 3730) GUIDE FOR SURFACE PREPARATION FOR THE REPAIR OF DETERIORATED CONCRETE RESULTING FROM REINFORCING STEEL CORROSION. THE CONTRACTOR SHALL FOLLOW THE MANUFACTURERS RECOMMENDATION FOR BONDING AGENT AND ADDITIONAL WIRE MESH REINFORCING TO BE INSTALLED WITHIN ANY REPAIR.

   B. FOLLOW ALL MANUFACTURER'S INSTRUCTIONS AND RECOMMENDATIONS FOR SURFACE PREPARATION, PRODUCT APPLICATION, AND PRODUCT CURING.

   C. PRIOR TO EXECUTING ANY REPAIRS, THE CONTRACTOR SHALL VISIT THE WORK AREA WITH THE OWNER, THE ENGINEER, AND THE REPAIR MATERIAL'S REPRESENTATIVE. THE ENGINEER SHALL DELINEATE THE PROPOSED REPAIRS TO THE CONTRACTOR. THE REPAIR MATERIAL'S REPRESENTATIVE SHALL CONFIRM THE PROPOSED MATERIALS ARE SUITABLE FOR THE PROPOSED REPAIRS. ALL PROPOSED REPAIRS (SURFACE AREA OR LINEAR REPAIRS) SHALL BE MEASURED AND AGREED PRIOR TO THE CONTRACTOR COMMENCING WORK.

   D. EXISTING FACILITIES MUST BE PROPERLY PROTECTED DURING ALL REPAIR, RESTORATION AND COATING OPERATIONS. THIS INCLUDES, BUT IS NOT LIMITED TO, COVERING WITH APPROPRIATE MATERIALS SUCH AS PLASTIC SHEETS, PLYWOOD OR OTHER OWNER ACCEPTABLE PROTECTIVE MATERIALS. CONTRACTOR IS RESPONSIBLE TO PROVIDE NECESSARY PROTECTION OF THE EXISTING FACILITIES TO OWNERS SATISFACTION.

   E. THE CONTRACTOR SHALL FOLLOW THE MANUFACTURER'S RECOMMENDATION FOR BONDING AGENT AND ADDITIONAL WIRE MESH REINFORCING TO BE INSTALLED WITHIN THE REPAIR.

   F. THE CONTRACTOR SHALL CONSULT THE MANUFACTURER FOR RECOMMENDATIONS TO ENSURE COMPATIBILITY BETWEEN EACH STRUCTURAL REPAIR MORTAR AND THE COATING SYSTEM.

   G. ONE HUNDRED PERCENT EPOXY GROUT MAY BE USED FOR MINOR REPAIRS. SEE SPECIFICATION 036000 FOR GROUTING.

2. SPECIFIC REQUIREMENTS FOR REPAIRS AT CONCRETE SURFACES TO RECEIVE A PROTECTIVE COATING SYSTEM AS SHOWN ON IN DRAWINGS.

   A. THE FOLLOWING REPAIRS AND SURFACE PREPARATION SHALL SHALL BE PERFORMED PER SECTION 448 OF THE JEA WATER & WASTEWATER STANDARDS (LATEST EDITION) IN CONJUCTION WITH SPECIFICATION SECTION 030100.61.

   B. CONCRETE REPAIR TYPE A - DAMAGED AREAS UP TO 1/2 INCHES

   C. CONCRETE REPAIR TYPE B - PARTIAL DEPTH WITH DAMAGED AREAS 1/2 TO 3 INCHES

   D. CONCRETE REPAIR TYPE C - FULL DEPTH WITH DAMAGED AREAS GREATER THAN 3 INCHES WITHOUT REINFORCEMENT REHABILITATION

   E. CONCRETE REPAIR TYPE D - FULL DEPTH WITH DAMAGED AREAS GREATER THAN 3 INCHES WITH REINFORCEMENT REHABILITATION. SEE JEA SECTION 448, PARAGRAPH VIII FOR REINFORCING STEEL REHABILITATION.

   F. CONCRETE REPAIR TYPE E - CRACKS. REFER TO NOTE 4-D FOR WALL AND BASE SLAB SURFACES. FOR TOP SLAB SURFACES WITHOUT ANY MOISTURE REFER TO NOTE 4-C.

3. PROTECTIVE COATING SYSTEMS AND SURFACE PREPARATION SHALL BE PERFORMED PER SECTION 447 OF THE JEA WATER & WASTEWATER STANDARDS (LATEST EDITION) IN CONJUCTION WITH SPECIFICATION SECTION 099724 AND THE MANUFACTURER'S REQUIREMENTS.

4. SPECIFIC REQUIREMENTS FOR ALL OTHER CONCRETE SURFACES REQUIRING REPAIR

   A. CONCRETE REPAIR TYPE 1 - DAMAGED CONCRETE WITHOUT EXPOSED REINFORCING REBAR:

      a. PREPARE SUBSTRATE BY MECHANICAL MEANS. SUBSTRATE MUST BE CLEAN, SOUND, AND FREE OF SURFACE CONTAMINANTS. REMOVE AND DISPOSE OF DUST, LAITANCE, GREASE, OILS, CURING COMPOUNDS, FORM RELEASE AGENTS AND ALL FOREIGN PARTICLES.

      b. SAW CUT CONCRETE SURFACE TO FORM REGULAR SHAPES AND ELIMINATE FEATHERED EDGES AND CREATE A 1/8 INCH MINIMUM REPAIR DEPTH, AS REQUIRED PER MANUFACTURERS RECOMMENDATIONS.

      c. REPAIRS SHALL BE ACCOMPLISHED USING A HAND APPLIED CEMENTITIOUS STRUCTURAL REPAIR MORTAR WITH AN INTEGRAL CORROSION INHIBITOR, WHICH IS CAPABLE OF APPLICATION THICKNESS UP TO 1½ INCHES IN A SINGLE APPLICATION. CEMENTITIOUS STRUCTURAL REPAIR MORTAR UP TO 1½ INCHES THICK SHALL BE APPLIED TWO-COMPONENT, POLYMER-MODIFIED, PORTLAND CEMENT, FAST-SETTING, NON-SAG MORTAR, PER SPECIFICATION 030100.61.

   B. CONCRETE REPAIR TYPE 2 - DAMAGED CONCRETE WITH EXPOSED REINFORCING STEEL:

      a. PREPARE SUBSTRATE BY MECHANICAL MEANS. SUBSTRATE MUST BE CLEAN, SOUND, AND FREE OF SURFACE CONTAMINANTS. REMOVE AND DISPOSE OF DUST, LAITANCE, GREASE, OILS, CURING COMPOUNDS, FORM RELEASE AGENTS AND ALL FOREIGN PARTICLES.

      b. THOROUGHLY CLEAN EXPOSED REINFORCING STEEL COMPLETELY REMOVING ALL RUST/CORROSION.

      c. ANY REBAR WITH CORROSION THAT HAS CAUSED A LOSS OF CROSS-SECTIONAL AREA OF 50 PERCENT OR GREATER MUST BE REPLACED. IF MORE THAN HALF OF THE REBAR IS EXPOSED, CHIP BACK CONCRETE 1.5 INCHES ON EACH SIDE.

      d. REPLACE DAMAGED REBAR WITH SAME SIZE BAR. EXPOSE REBAR BACK TO AREA WITH FULL CROSS-SECTIONAL AREA AND SPLICE WITH MECHANICAL BAR SPLICE. WHERE THE BAR SPLICES ARE NOT PRACTICAL, DRILL AND EPOXY NEW REBAR INTO SOUND CONCRETE.

      e. APPLY THREE-COMPONENT, SOLVENT FREE, EPOXY MODIFIED BONDING AGENT WITH ANTI CORROSION PROPERTIES, PER SPECIFICATION 030100.61. APPLY TWO 20 MIL COATS AS RECOMMENDED BY THE MANUFACTURER FOR BONDING AGENT AND REPAIR PROTECTION.

      f. APPLY TWO-COMPONENT, POLYMER-MODIFIED, PORTLAND CEMENT, FAST-SETTING, NON-SAG MORTAR WITH A PENETRATING CORROSION INHIBITOR PER SPECIFICATION 030100.61.

      g. ANY AND ALL EXPOSED REBAR WITH SIGNIFICANT LOSS OF SECTION MUST BE EVALUATED ON A CASE-BY-CASE BASIS TO DETERMINE THE APPROPRIATE METHOD TO SPLICE NEW REBAR TO RESTORE STRENGTH.

   C. EPOXY INJECTION - NON-MOVING STRUCTURAL CRACKS:

      a. CRACKS DETERMINED TO BE STABLE AND NO LONGER MOVING AND/OR CRACKS THAT ARE LARGER THAN HAIRLINE (AS DEFINED BY ACI CT-13) AND/OR EXTEND COMPLETELY THROUGH THE THICKNESS OF THE WALL/SLAB.

      b. PREPARE SUBSTRATE BY MECHANICAL MEANS. SUBSTRATE MUST BE CLEAN, SOUND, AND FREE OF SURFACE CONTAMINANTS. REMOVE AND DISPOSE OF DUST, LAITANCE, GREASE, OILS, CURING COMPOUNDS, FORM RELEASE AGENTS AND ALL FOREIGN PARTICLES. FOLLOW THE MANUFACTURERS INSTRUCTIONS FOR SURFACE PREPARATION.

      c. ENSURE CRACKS ARE COMPLETELY FREE OF MOISTURE PRIOR TO PRODUCT APPLICATION.

      d. INSTALL A HIGH-MODULUS, MOISTURE-TOLERANT, LOW-VISCOSITY, HIGH-STRENGTH, MULTI-PURPOSE EPOXY RESIN ADHESIVE GROUT BY GRAVITY OR INJECTION PER SPECIFICATION 030100.61.

   D. POLYURETHANE INJECTION - MOVING STRUCTURAL CRACKS:

      a. PREPARE SUBSTRATE BY MECHANICAL MEANS. SUBSTRATE MUST BE CLEAN, SOUND, AND FREE OF SURFACE CONTAMINANTS. REMOVE AND DISPOSE OF DUST, LAITANCE, GREASE, OILS, CURING COMPOUNDS, FORM RELEASE AGENTS AND ALL FOREIGN PARTICLES. FOLLOW THE MANUFACTURERS INSTRUCTIONS. FOR SURFACE PREPARATION

      b. DRILL INJECTION PORTS ON EACH SIDE OF THE CRACK AT A 45-DEGREE ANGLE TO INTERSECT THE CRACK AT THE CENTER OF THE WALL. INSTALL PORTS AND FLUSH WITH WATER IN ACCORDANCE WITH MANUFACTURER'S INSTRUCTIONS.

   E. GRATING, GUARDRAIL POSTS, TOE BOARDS AND RAILS:

MISSING, LOOSE, CORRODED AND/OR BROKEN GUARDRAIL POSTS, TOE BOARDS, RAILS AND GRATE ARE DANGEROUS AND REPRESENT A SAFETY CONCERN TO ALL STAFF WORKING AROUND THE STRUCTURES. CAUTION TAPE ALERTING STAFF TO WEAK OR DAMAGED POSTS, RAILS AND GRATE SHOULD BE INSTALLED AS SOON AS POSSIBLE. LONG TERM, PERMANENT FIXES INCLUDE:

a. FOR ALL POST CONNECTIONS WITH BROKEN WELDS OR DAMAGED BASE PLATES, REMOVE EXISTING BASE PLATE AND INSTALL NEW BASE USING EXPANSION BOLTS INTO THE CONCRETE. REPLACE ALL MISSING BOLTS.

b. INSTALL NEW GUARDRAIL, TOE BOARDS AND HANDRAILS MATCHING THE EXISTING IN AREAS WITH MISSING GUARDRAIL, TOE BOARDS AND HANDRAILS. ALUMINUM RAILING AND HANDRAIL SHALL BE A WELDED, SEAMLESS, EXTRUDED ALUMINUM PIPE SYSTEM. RAILS SHALL BE 6063-T6 ALLOY. POSTS SHALL BE 6061-T6 ALLOY. RAILINGS SHALL BE 2 RAIL WELDED RAILING SYSTEMS FABRICATED WITH 1½-IN NOMINAL DIAMETER PIPE. POSTS SHALL BE SCHEDULE 80 PIPE, MINIMUM AND RAILS AND HANDRAIL SHALL BE SCHEDULE 40 PIPE, MINIMUM. POSTS AND TOP RAILS SHALL BE CONTINUOUS. SPACING OF POSTS SHALL NOT EXCEED 5-FT ON CENTER AND SHALL BE UNIFORMLY SPACED. AND THEY SHALL COMPLY WITH THE REQUIREMENTS OF OSHA AND FLORIDA BUILDING CODE.

c. TOEBOARDS SHALL BE PROVIDED ON ALL RAILING ADJACENT TO A DROP IN ELEVATION OF 4-FT OR MORE. TOEBOARDS ARE NOT REQUIRED ON THE INCLINED PORTION OF STAIRWAY RAILINGS OR WHERE CONCRETE OR STEEL CURBS, 4-IN OR MORE IN HEIGHT, ARE PRESENT. TOEBOARDS SHALL BE 4-IN HIGH CHANNELS OF THE SAME MATERIAL AS THE RAILING. THE CHANNELS SHALL HAVE A MINIMUM THICKNESS OF 1/8-IN AND HAVE FLANGES OF NOT LESS THAN 3/4-IN NOR MORE THAN 11/2-IN IN WIDTH. TOEBOARDS SHALL BE POSITIONED WITH A MAXIMUM CLEARANCE OF 1/4-IN FROM THE FLOOR AND FASTENED TO RAILING POSTS WITH 1/4-IN STAINLESS STEEL U-BOLTS, WITH J-BOLTS AT CORNER POSTS AND WITH CLIP ANGLES AND TWO 1/4-IN STAINLESS STEEL EXPANSION BOLTS AT WALLS.

d. FOR ALL CORRODED AND/OR MISSING GRATING AND ITS SUPPORTING ANGLES, REMOVE EXISTING GRATING AND ANGLES AND INSTALL NEW ANGLES AND GRATING. GRATING SHALL HAVE RECTANGULAR, 3/16-IN THICK, BEARING BARS SPACED 13/16-IN ON CENTER WITH CROSS BARS SPACED AT 4-IN ON CENTER. ALL GRATING PANELS SHALL BE BANDED WITH A BAR THE SAME SIZE AS THE BEARING BARS. ALUMINUM GRATING MATERIAL SHALL BE ALUMINUM ALLOY 6063-T6 WITH A MILL FINISH. CROSS BARS SHALL BE ATTACHED TO THE BEARING BARS WITH INTERLOCKED SWAGED JOINTS. THE GRATING SHALL BE TYPE 19-SG-4 BY OHIO GRATINGS, INC., CANTON, OHIO OR PROFESSIONAL APPROVED EQUAL. ALUMINUM SHAPES IN CONTACT WITH CONCRETE SHALL BE SEPARATED BY A 1/32" NEOPRENE GASKET OR ANY CASE WHERE TWO DIFFERENT METALS ARE TO BE IN CONTACT.

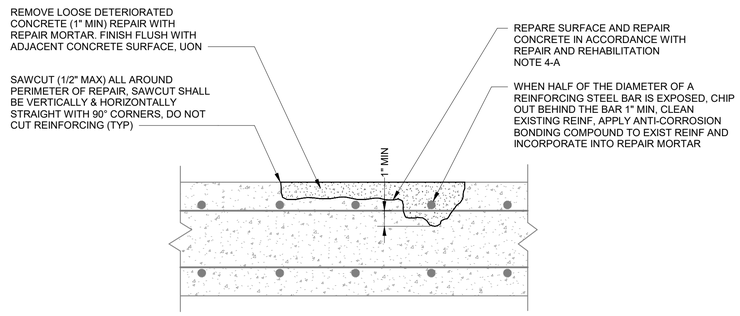


REPAIR OF SPALLED/DETERIORATED/EXPOSED AGGREGATE (NOTE 4-A)

**A DETAIL**
NTS

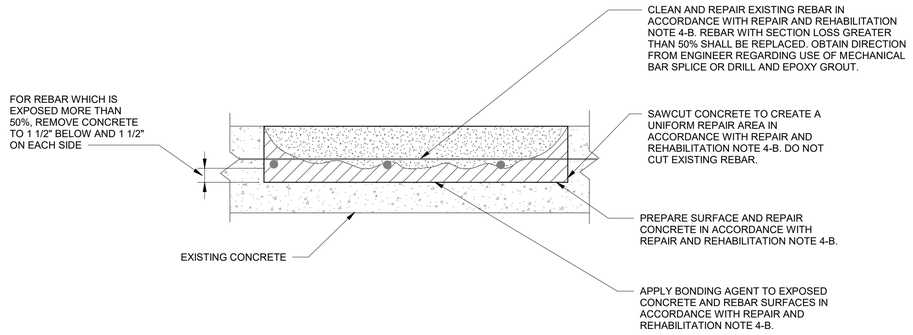


CONCRETE REPAIR WITH EXPOSED REBAR (NOTE 4-B)

**B DETAIL**
NTS

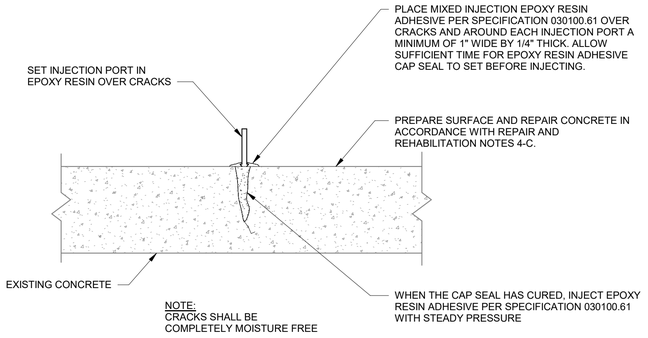


EPOXY INJECTION - NON-MOVING STRUCTURAL CRACKS (NOTES 4-C)

**C DETAIL**
NTS

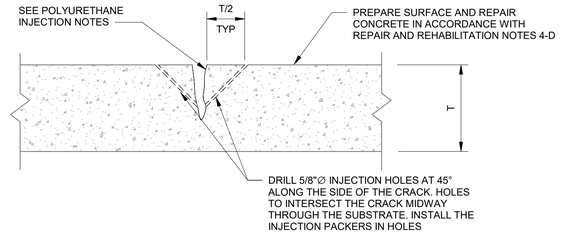


POLYURETHANE INJECTION - MOVING STRUCTURAL CRACKS (NOTES 4-D)

**D DETAIL**
NTS

POLYURETHANE INJECTION NOTES:

1. PRIOR TO PRODUCT APPLICATION MOISTURE MUST BE PRESENT IN ORDER TO ACTIVATE GROUT.
2. IF CONCRETE BEING INJECTED CONTAINS INSUFFICIENT MOISTURE TO ACTIVATE GROUT, INJECT THE CRACK WITH SMALL AMOUNT OF WATER PRIOR TO THE APPLICATION OF THE POLYURETHANE CHEMICAL GROUT.
3. INJECT POLYURETHANE CHEMICAL GROUT PER SPECIFICATION 030100.61 FOR 45 SECONDS AND THEN PAUSE TO ALLOW THE MATERIAL TO REACT AND FLOW INTO ALL OF THE CRACKS AND CREVICES.
4. WATCH FOR MATERIAL FLOW AND WATER MOVEMENT TO APPEAR ON THE SURFACE. WHEN MOVEMENT STOPS, BEGIN INJECTING INTO THE NEXT INJECTION PORT.
5. WHEN SEALING VERTICAL CRACKS, BEGIN INJECTION AT THE BOTTOM OF THE CRACK AND WORK VERTICALLY UP THE CRACK.
6. WHERE HEAVY WATER FLOW IS PRESENT, BEGIN INJECTING THE CRACK AT THE PART WHERE THE SLOWEST FLOW IS APPARENT AND WORK VERTICALLY TOWARDS THE AREA OF HEAVY FLOW FOLLOWING APPLICATION PROCEDURES ABOVE.

© 2019 CDM SMITH ALL RIGHTS RESERVED.
REUSE OF DOCUMENTS: THESE DOCUMENTS AND DESIGNS PROVIDED BY PROFESSIONAL SERVICE, INCORPORATED HEREIN, ARE THE PROPERTY OF CDM SMITH AND ARE NOT TO BE USER, IN WHOLE OR PART, FOR ANY OTHER PROJECT WITHOUT THE WRITTEN AUTHORIZATION OF CDM SMITH.

| REV. NO. | DATE | DRWN | CHKD | REMARKS |
|---|---|---|---|---|
| | | | | |

DESIGNED BY: E. RIVERA
DRAWN BY: M. TRAPP
SHEET CHK'D BY: K. FRANCOFORTE
CROSS CHK'D BY: R. HAGAMAN
APPROVED BY: E. RIVERA
DATE: JANUARY 2020

CDM Smith
4651 Salisbury Road, Suite 420
Jacksonville, FL 32256
Tel: (904) 731-7109
FL COA No. EB-0000020

JEA

WILSON BLVD. (180-45) AND 118th ST. (180-47)
MASTER PUMP STATION IMPROVEMENTS

118TH STREET
REPAIR NOTES AND DETAILS

PROJECT NO. 6103-234169
FILE NAME: SWZ001PS.RVT

SHEET NO.
S-10

60% SUBMITTAL - NOT FOR CONSTRUCTION

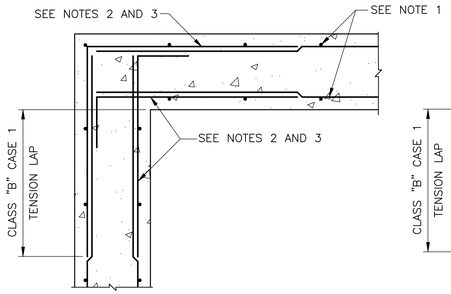


WALL CORNER REINFORCING

DETAIL A
NTS

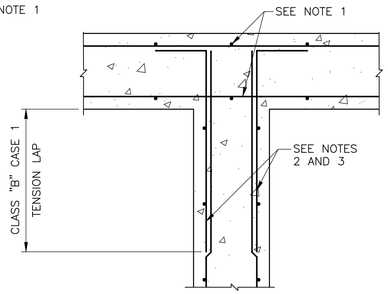


WALL INTERSECTION REINFORCING

DETAIL B
NTS

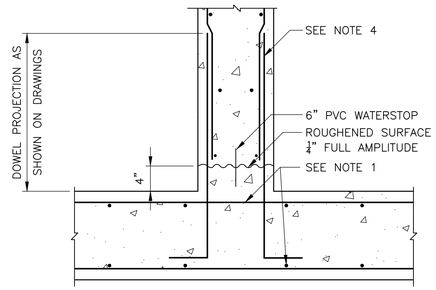


WALL BASE CONSTRUCTION JOINT

DETAIL C
NTS

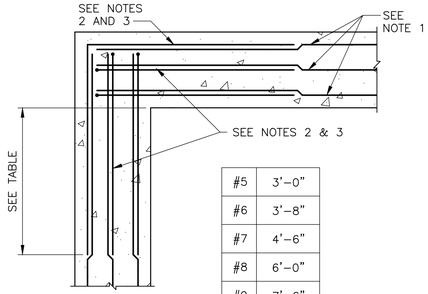


| | |
|---|---|
| #5 | 3'–0" |
| #6 | 3'–8" |
| #7 | 4'–6" |
| #8 | 6'–0" |
| #9 | 7'–6" |

BEAM/GRADE BEAM CORNER REINFORCING

DETAIL D
NTS

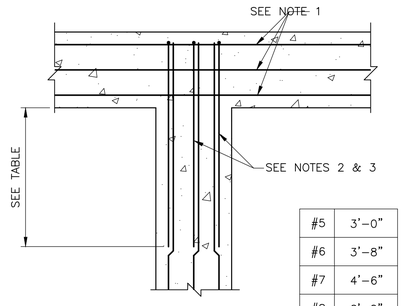


| | |
|---|---|
| #5 | 3'–0" |
| #6 | 3'–8" |
| #7 | 4'–6" |
| #8 | 6'–0" |
| #9 | 7'–6" |

BEAM/GRADE BEAM INTERSECTION REINFORCING

DETAIL E
NTS

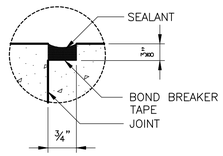


PARTIAL CONTRACTION JOINT SEALANT (PCJ)

DETAIL F
NTS

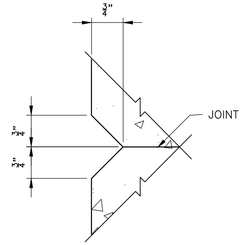


PARTIAL CONTRACTION JOINT CHAMFER

DETAIL □
NTS

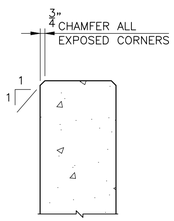


CHAMFER

DETAIL H
NTS

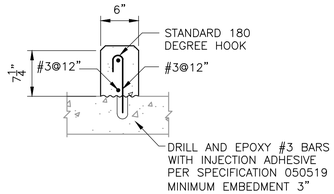


SEE PLANS FOR CURB DIMENSIONS

CURB

DETAIL J
NTS

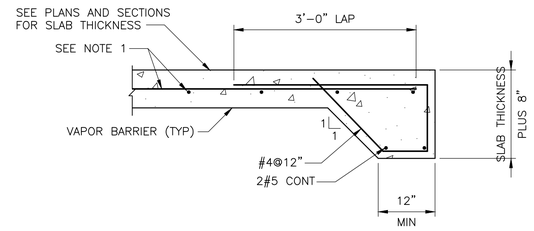


THICKENED EDGE SLAB

DETAIL K
NTS

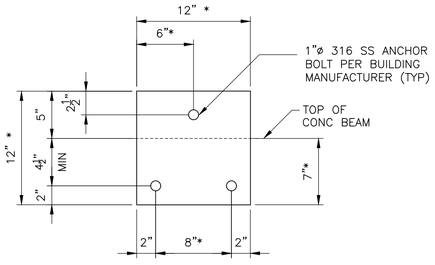


PRECAST BUILDING ANCHOR PLATE

DETAIL L
1–1/2" = 1'–0"

* BASE PLATE DIMENSIONS PER MANUFACTURER. MINIMUM DIMENSIONS SHOWN.

NOTES:

1. BASIC SLAB/WALL/BEAM REINFORCING AS SHOWN ON DESIGN DRAWINGS
2. SIZE AND SPACING OF BAR TO MATCH WALL/BEAM REINFORCEMENT AS SHOWN ON DESIGN DRAWINGS
3. FOR ADDITIONAL BARS AT CORNERS AND INTERSECTIONS SEE DESIGN DRAWINGS
4. FOR DOWEL SIZE AND SPACING SEE DESIGN DRAWINGS

| REV. NO. | DATE | DRWN | CHKD | REMARKS |
|---|---|---|---|---|
| | | | | |

DESIGNED BY: E. RIVERA
DRAWN BY: M. TRAPP
SHEET CHK'D BY: K. FRANCOFORTE
CROSS CHK'D BY: R. HAGAMAN
APPROVED BY: E. RIVERA
DATE: FEBRUARY 2020

CDM Smith
4651 Salisbury Road, Suite 420
Jacksonville, FL 32256
Tel: (904) 731-7109
FL COA No. EB-0000020

JEA

WILSON BLVD. (180-45) AND 118th ST. (180-47)
MASTER PUMP STATION IMPROVEMENTS

STRUCTURAL DETAILS

PROJECT NO. 6103–234169
FILE NAME: SD01STDT.DWG
SHEET NO.
SD-1

60% SUBMITTAL - NOT FOR CONSTRUCTION

XREFs: [CDMS_2234] Images: []
Last saved by: RIVERAEA Time: 2/14/2020 5:48:10 PM
pw:\\cdmsmith-us02-pw.bentley.com:PW_XM1\6103\234169 JEA PDB\04 Design Services NM_60%\04 Structural\10 CADD\SD01STDT.dwg
©2020 CDM SMITH ALL RIGHTS RESERVED.
REUSE OF DOCUMENTS: THESE DOCUMENTS AND DESIGNS PROVIDED BY PROFESSIONAL SERVICE, INCORPORATED HEREIN, ARE THE PROPERTY OF CDM SMITH AND ARE NOT TO BE USED, IN WHOLE OR PART, FOR ANY OTHER PROJECT WITHOUT THE WRITTEN AUTHORIZATION OF CDM SMITH.

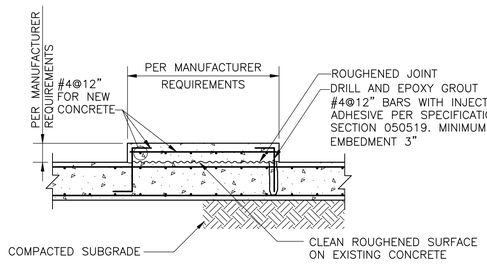


SEE SPECIFICATION SECTION 030130.71 FOR MODIFICATION AND SURFACE PREPARATION DETAILS

HOUSEKEEPING PAD FOR NEW OR EXISTING SLAB

DETAIL A — NTS

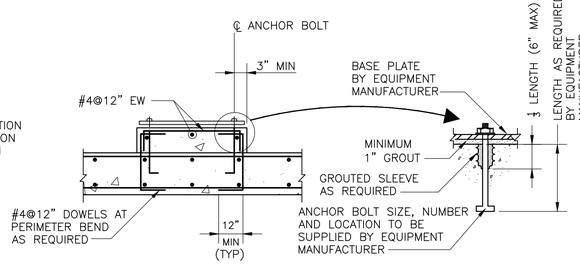


DIMENSIONS OF PAD AS REQUIRED TO SUIT EQUIPMENT (4" MINIMUM HEIGHT UNLESS PAD IS CAST INTEGRALLY WITH SLAB)

EQUIPMENT PAD

DETAIL B — NTS

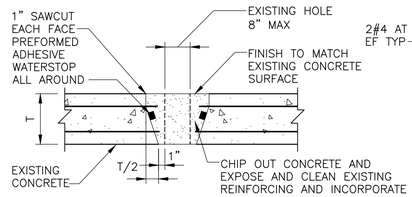


SMALL HOLE PATCH

DETAIL C — NTS

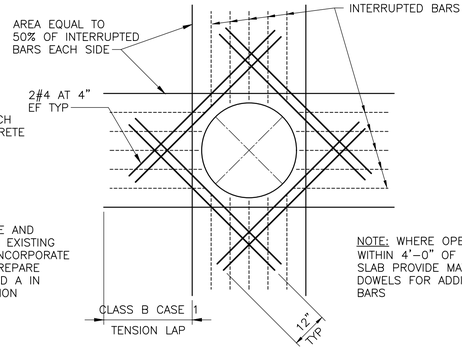


NOTE: WHERE OPENING IS WITHIN 4'–0" OF BASE SLAB PROVIDE MATCHING DOWELS FOR ADDITIONAL BARS

REINFORCEMENT AT CIRCULAR OPENINGS GREATER THAN 12"

DETAIL D — NTS

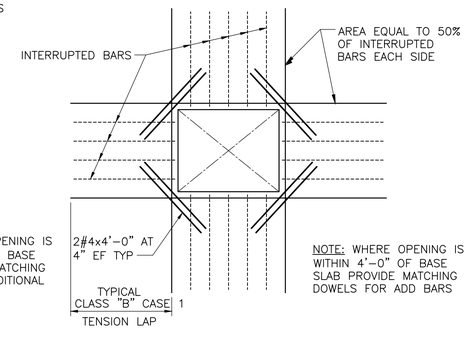


NOTE: WHERE OPENING IS WITHIN 4'–0" OF BASE SLAB PROVIDE MATCHING DOWELS FOR ADD BARS

REINFORCEMENT AT RECTANGULAR OPENINGS GREATER THAN 12"

DETAIL E — NTS

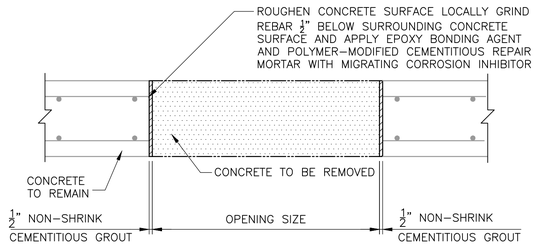


NOTE:
SEE SPECIFICATIONS FOR APPROVED MANUFACTURERS.

DEMOLITION OF EXISTING CONCRETE

DETAIL F — NTS

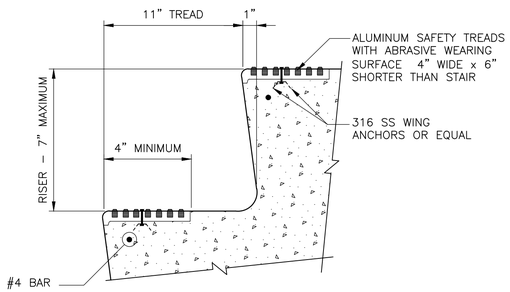


EMBEDDED SAFETY TREAD

DETAIL G — NTS

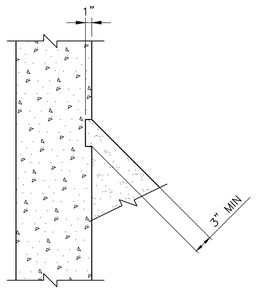


GROUT FILLET

DETAIL H — NTS

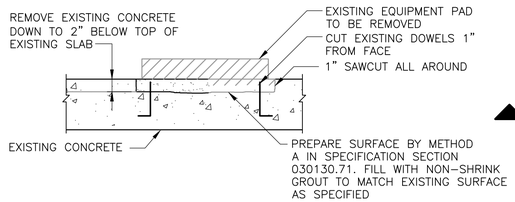


EXISTING EQUIPMENT PAD REMOVAL

DETAIL J — NTS

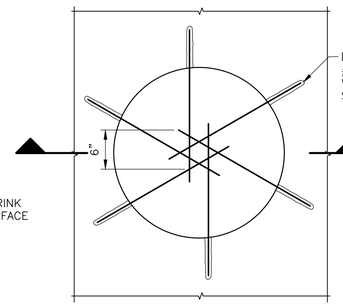


REPAIR OF EXISTING HOLE (ø>12")

DETAIL K — NTS

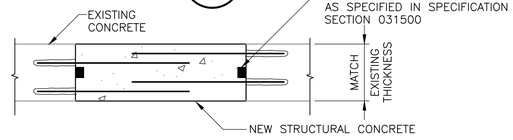


SECTION 1 — NTS

CLASS B TENSION LAP SPLICE LENGTHS IN WALLS AND SLABS (INCHES)

| BAR SIZE | BLACK STEEL f'c=4500 psi | |
|---|---|---|
| | TOP BARS | OTHER BARS |
| 3 | 14 | 12 |
| 4 | 19 | 14 |
| 5 | 27 | 21 |
| 6 | 38 | 29 |
| 7 | 61 | 47 |
| 8 | 76 | 59 |
| 8* | 46 | 35 |
| 9* | 57 | 44 |
| 10* | 70 | 54 |

TENSION DEVELOPMENT LENGTHS IN WALLS AND SLABS (INCHES)

| BAR SIZE | BLACK STEEL f'c=4500 psi | |
|---|---|---|
| | TOP BARS | OTHER BARS |
| 3 | 12 | 12 |
| 4 | 14 | 12 |
| 5 | 21 | 16 |
| 6 | 29 | 22 |
| 7 | 47 | 36 |
| 8 | 59 | 45 |
| 8* | 35 | 27 |
| 9* | 44 | 34 |
| 10* | 54 | 42 |

NOTES:
1. MINIMUM BAR SPACING = 6" INCHES ON CENTER.
2. MINIMUM CONCRETE COVER = 1", EXCEPT AS NOTED BY * .
   * INDICATES MINIMUM CONCRETE COVER= 2".
3. A TOP BAR IS A HORIZONTAL BAR WHERE MORE THAN 12" OF FRESH CONCRETE IS CAST DIRECTLY BELOW THE BAR. WHERE HORIZONTAL WALL REINFORCEMENT IS UNIFORMLY SPACED IN A VERTICAL PLANE AT 12" MAXIMUM SPACING, LENGTHS MAY BE AS FOR "OTHER BARS".
4. LENGTHS FOR BEAMS AND COLUMNS SHALL BE AS SHOWN ON THE DRAWINGS.

## LAP SPLICE AND DEVELOPMENT LENGTHS BLACK REINFORCING STEEL

PIPE ENCASEMENT NOTES:

1. ALL PIPE SHALL BE PRESSURE TESTED BEFORE CONCRETE PLACEMENT.
2. ALL BELOW GRADE PIPES SHALL BE SUPPORTED ON CONCRETE BLOCKS PRIOR TO CASTING OF CONCRETE BEDDING. SIZE AND SPACING OF CONCRETE BLOCK SUPPORTS SHALL BE PER PIPE MANUFACTURER.
3. FOR ALL PIPES 12–INCH DIAMETER AND LARGER, ENCASEMENT SHALL BE CAST IN TWO POURS. INITIAL CAST SHALL BE CURED FOR 12 HR. BEFORE CASTING THE SECOND POUR.
4. ENCASE ALL PIPES BELOW SLABS AND FOOTINGS. EXTEND ENCASEMENT 5'–0" BEYOND EDGE OF SLAB OR FOOTING.
5. ENCASEMENT FOR 6" DIAMETER AND SMALLER PIPES SHALL BE 6" MINIMUM. FOR PIPE DIAMETERS GREATER THAN 6", ENCASEMENT SHALL BE 12" MINIMUM.
6. MAINTAIN MINIMUM COVER FOR LAPS FOR PIPES SMALLER THAN 6" DIAMETER.

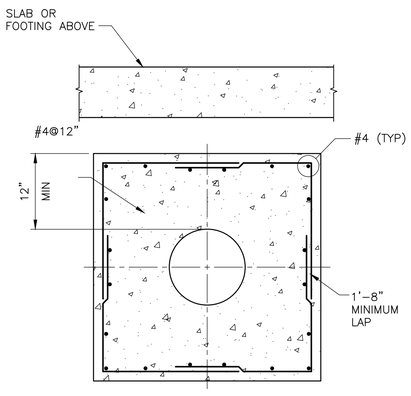


PIPE ENCASEMENT

DETAIL K — NTS

NOTES:
1. BASIC SLAB/WALL/BEAM REINFORCEMENT AS SHOWN ON DESIGN DRAWINGS
2. SIZE AND SPACING OF BAR TO MATCH WALL/BEAM REINFORCEMENT AS SHOWN ON DESIGN DRAWINGS
3. FOR ADDITIONAL BARS AT CORNERS AND INTERSECTIONS SEE DESIGN DRAWINGS
4. FOR DOWEL SIZE AND SPACING SEE DESIGN DRAWINGS

| REV. NO. | DATE | DRWN | CHKD | REMARKS |
|---|---|---|---|---|

DESIGNED BY: E. RIVERA
DRAWN BY: M. TRAPP
SHEET CHK'D BY: K. FRANCOFORTE
CROSS CHK'D BY: R. HAGAMAN
APPROVED BY: E. RIVERA
DATE: FEBRUARY 2020

CDM Smith
4651 Salisbury Road, Suite 420
Jacksonville, FL 32256
Tel: (904) 731-7109
FL COA No. EB-0000020

JEA

WILSON BLVD. (180-45) AND 118th ST. (180-47)
MASTER PUMP STATION IMPROVEMENTS

STRUCTURAL DETAILS

PROJECT NO. 6103–234169
FILE NAME: SD02STDT.DWG
SHEET NO. SD-2

60% SUBMITTAL - NOT FOR CONSTRUCTION

XREFs: [CDMS_2234] Images: []
Last saved by: RIVERAEA Time: 2/14/2020 5:57:35 PM
pw:\\cdmsmith-az02-pw.bentley.com:PW_XM1\6103\234169 JEA PDB\04 Design Services NM_60%\04 Structural\10 CADD\SD02STDT.dwg
©2020 CDM SMITH ALL RIGHTS RESERVED.
REUSE OF DOCUMENTS: THESE DOCUMENTS AND DESIGNS PROVIDED BY PROFESSIONAL SERVICE, INCORPORATED HEREIN, ARE THE PROPERTY OF CDM SMITH AND ARE NOT TO BE USED, IN WHOLE OR PART, FOR ANY OTHER PROJECT WITHOUT THE WRITTEN AUTHORIZATION OF CDM SMITH.

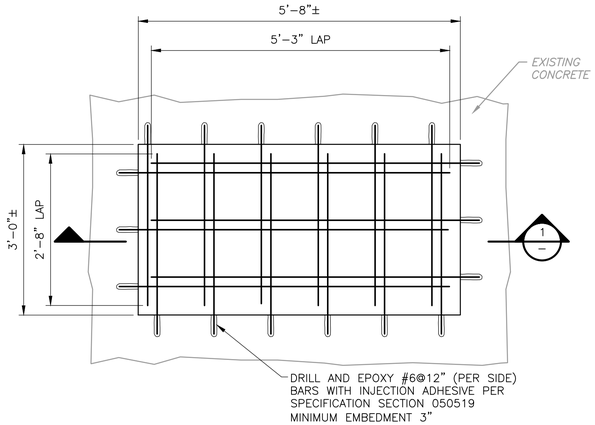


REPAIR OF EXISTING OPENING

DETAIL A
3/4" = 1'-0"

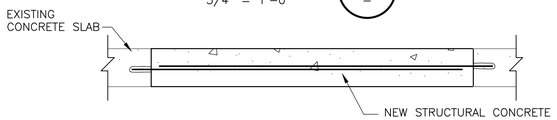


SECTION 1
3/4" = 1'-0"

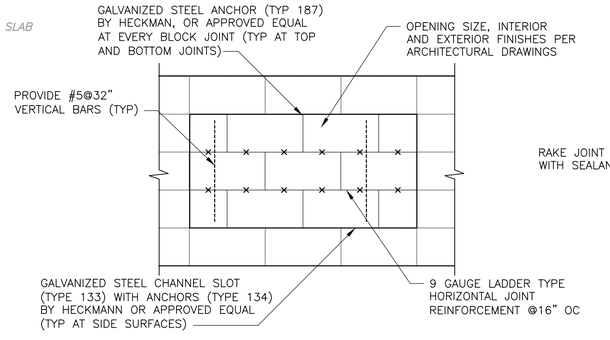


OPENING REPAIR AT EXISTING CMU WALL

DETAIL B
NTS

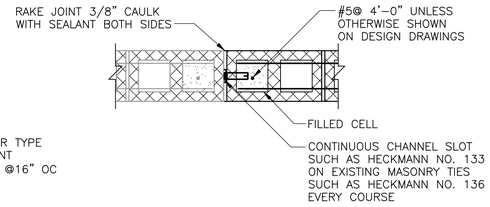


NEW CMU TO EXISTING CMU

DETAIL C
NTS

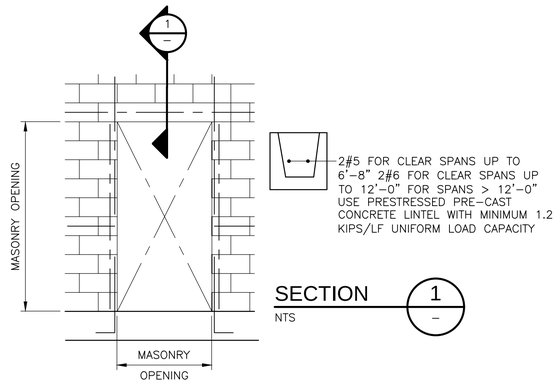


LINTEL WITH STUCCO OR VENEER FINISH

DETAIL D
NTS




BRICK SHELF PLATE

DETAIL E
NTS

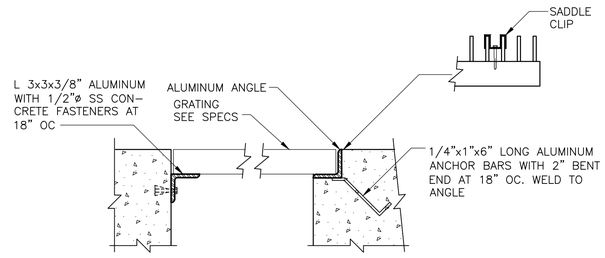


| MAXIMUM SPAN | DEPTH | BEARING BAR | |
|---|---|---|---|
| | | THICKNESS | SPACING |
| 3'-0" | 1 1/4" | 3/16" | 1 3/16" |
| 4'-0" | 1 1/2" | 3/16" | 1 3/16" |
| 5'-0" | 2" | 3/16" | 1 3/16" |
| 6'-0" | 2 1/4" | 3/16" | 1 3/16" |

GRATING AND GRATING SUPPORT

DETAIL F
NTS

NOTES:

1. BASIC SLAB/WALL/BEAM REINFORCEMENT AS SHOWN ON DESIGN DRAWINGS
2. SIZE AND SPACING OF BAR TO MATCH WALL/BEAM REINFORCEMENT AS SHOWN ON DESIGN DRAWINGS
3. FOR ADDITIONAL BARS AT CORNERS AND INTERSECTIONS SEE DESIGN DRAWINGS
4. FOR DOWEL SIZE AND SPACING SEE DESIGN DRAWINGS

| REV. NO. | DATE | DRWN | CHKD | REMARKS |
|---|---|---|---|---|

DESIGNED BY: E. RIVERA
DRAWN BY: M. TRAPP
SHEET CHK'D BY: K. FRANCOFORTE
CROSS CHK'D BY: R. HAGAMAN
APPROVED BY: E. RIVERA
DATE: FEBRUARY 2020

CDM Smith
4651 Salisbury Road, Suite 420
Jacksonville, FL 32256
Tel: (904) 731-7109
FL COA No. EB-0000020

JEA

WILSON BLVD. (180-45) AND 118th ST. (180-47)
MASTER PUMP STATION IMPROVEMENTS

STRUCTURAL DETAILS

PROJECT NO. 6103-234169
FILE NAME: SD03STDT.DWG

SHEET NO.
SD-3

60% SUBMITTAL - NOT FOR CONSTRUCTION

XREFs: [CDMS_2234] Images: []
Last saved by: RIVERAEA Time: 2/14/2020 6:04:02 PM
C:\cdmxrn\Riverae\v3015268\SD03STDT.dwg
© 2020 CDM SMITH ALL RIGHTS RESERVED
REUSE OF DOCUMENTS: THESE DOCUMENTS AND DESIGNS PROVIDED BY PROFESSIONAL SERVICE, INCORPORATED HEREIN, ARE THE PROPERTY OF CDM SMITH AND ARE NOT TO BE USED, IN WHOLE OR PART, FOR ANY OTHER PROJECT WITHOUT THE WRITTEN AUTHORIZATION OF CDM SMITH.

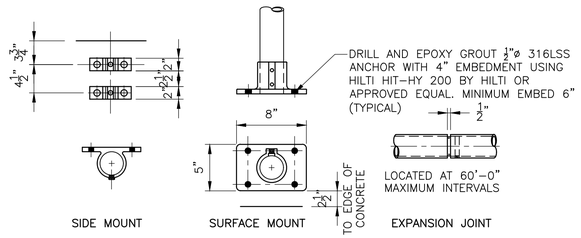


## CONNECTIONS FOR NON-REMOVABLE GUARDRAIL

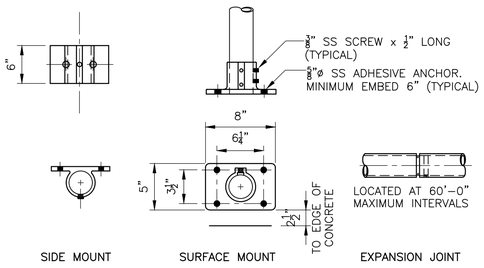


## CONNECTIONS FOR REMOVABLE GUARDRAIL

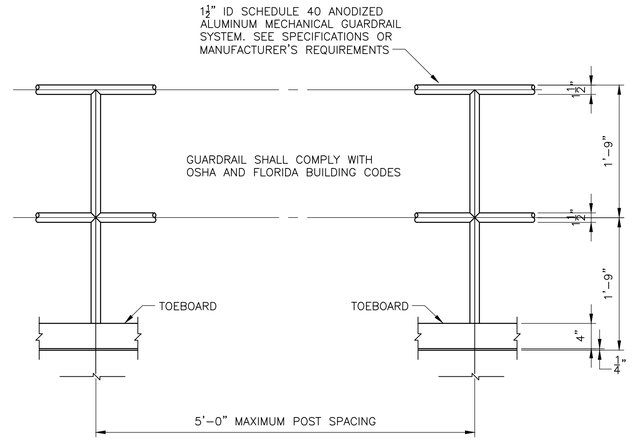


## GUARDRAIL DETAIL A

1" = 1'-0"

GUARDRAIL NOTES:

1. ALUMINUM EMBEDDED IN CONCRETE SHALL BE PAINTED WITH ONE SHOP COAT OF HEAVY BITUMASTIC.
2. ALUMINUM SHAPES IN CONTACT WITH CONCRETE SHALL BE SEPARATED BY A 1/32" NEOPRENE GASKET OR ANY CASE WHERE TWO DIFFERENT METALS ARE TO BE IN CONTACT. A NEOPRENE GASKET SHALL BE PROVIDED.
3. HANDRAILS, GUARDRAILS, POSTS, BRACKETS AND MOUNTINGS SHALL MEET THE FLORIDA BUILDING CODE AND OCCUPATIONAL SAFETY AND HEALTH ADMINISTRATION (OSHA) LOADING REQUIREMENTS.
4. TOP OF ALL GUARDRAILS SHALL BE 42" HIGH ABOVE THE FINISH FLOOR OR WALKWAY. THE CLEAR DISTANCE BETWEEN THE TOP AND INTERMEDIATE RAILS MEASURED AT RIGHT ANGLES TO THE RAILS SHALL NOT EXCEED 21".

GUARDRAILS SHALL BE TWO RAIL, 1½" DIAMETER SYSTEM. THE CENTERLINE OF THE INTERMEDIATE PARALLEL RAIL SHALL BE AT THE POST MID-POINT BETWEEN THE TOP RAIL AND TOE BOARD (AT HORIZONTAL SURFACES) AND BETWEEN TOP RAIL AND STRINGER (AT STAIRS/STEPS). HOWEVER, MAXIMUM CLEAR DISTANCE BETWEEN RAILS MEASURED AT RIGHT ANGLES TO RAILS SHALL BE 21".

GUARDRAILS AT HORIZONTAL SURFACES (LANDINGS, MEZZANINES, ETC) SHALL BE 42" HIGH AND SHALL BE PROVIDED WITH A 4" TOE BOARD.

AT STAIRS/STEPS, PROVIDE STRINGER-MOUNTED GUARDRAIL SYSTEM PARALLEL TO STRINGER SLOPE, 42" HIGH ABOVE LEADING EDGE OF TREAD AND PROVIDE ADDITIONAL INSIDE MOUNTED HANDRAIL(S) MEETING THE REQUIREMENTS FOR HANDRAILS AS DESCRIBED BELOW.

HANDRAIL NOTES:

HANDRAILS (WALL OR GUARDRAIL MOUNTED) AT STAIRS/STEPS. PROVIDE 1½" DIAMETER WALL AND/OR GUARDRAIL MOUNTED (AS APPLICABLE) ALUMINUM HANDRAILS AT BOTH SIDES OF STAIRS/STEPS. HANDRAILS SHALL BE MOUNTED PARALLEL TO STRINGER SLOPE, 34" HIGH ABOVE LEADING EDGE OF TREAD. HANDRAILS SHALL EXTEND 12" BEYOND TOP RISER, AND SHALL EXTEND 11" BEYOND THE BOTTOM RISER. AT THE BOTTOM, HANDRAILS SHALL CONTINUE TO SLOPE FOR A DISTANCE OF THE DEPTH OF ONE TREAD BEYOND THE BOTTOM RISER; THE REMAINDER SHALL BE HORIZONTAL. THE FINGER CLEARANCE BETWEEN THE HANDRAIL AND THE WALL, GUARD OR OTHER OBSTRUCTION SHALL BE 1½".

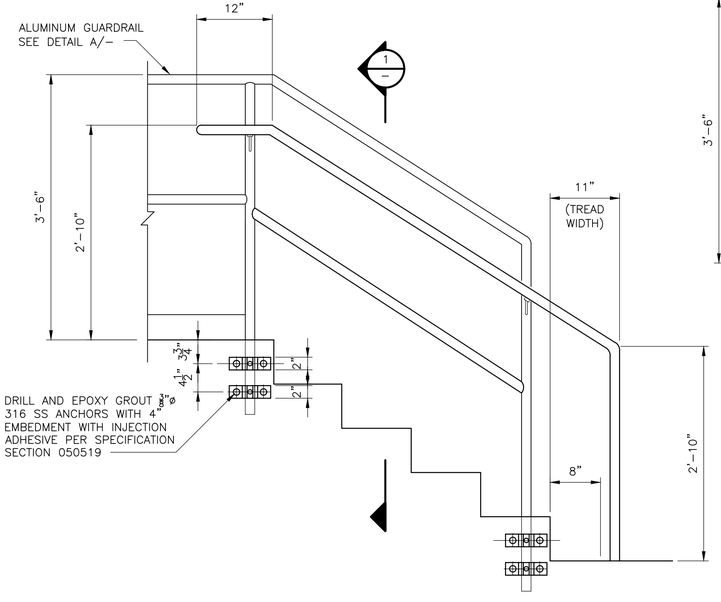


## HANDRAIL ATTACHED TO GUARDRAIL SYSTEM DETAIL B

1" = 1'-0"

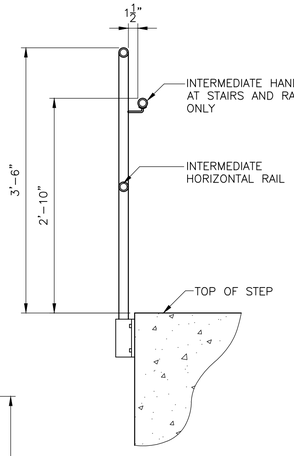


## SECTION 1

1" = 1'-0"

| NOMINAL BEAM DEPTH, INCHES | ROWS OF BOLTS | LENGTH (3) OF ANGLE |
|---|---|---|
| 36 | 7 | 1'-8 1/2" |
| 30-33 | 6 | 1'-5 1/2" |
| 24-27 | 5 | 1'-2 1/2" |
| 16-21 | 4 | 11 1/2" |
| 12-15 | 3 | 8 1/2" |
| 8-10 | 2 | 5 1/2" |
| 6 | 1 | 3" |

NOTES:

1. NUMBER OF ROWS IS EQUAL TO NUMBER OF BOLTS TO ENCLOSED WEB.
2. ALL FRAMING CONNECTIONS SHALL CONFORM TO SCHEDULE UNLESS DETAILED OTHERWISE ON FRAMING DRAWINGS.
3. ADD 1-1/2" TO ANGLE LENGTH FOR STAGGERED BOLT CONNECTIONS.
4. USE SST BOLTS FOR ALL ALUMINUM FRAMING.

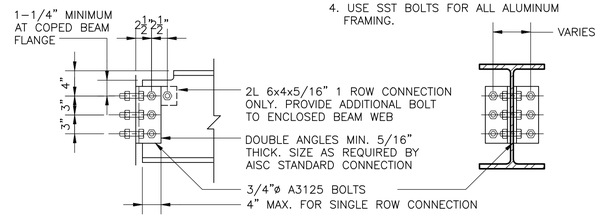


NOTE:
3" DIMENSION TYPICAL EXCEPT AS RECOMMENDED BY AISC FOR LARGER MEMBERS

## TYPICAL FRAMING CONNECTION DETAIL C

1"=1'-0"

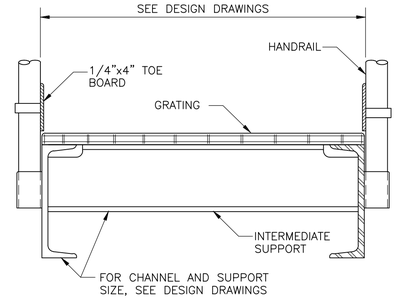


## TYPICAL PLATFORM SECTION DETAIL D

1"=1'-0"

NOTES:

1. ALUMINUM EMBEDDED IN OR IN CONTACT WITH CONCRETE MUST BE PAINTED WITH ONE SHOP COAT OF HEAVY BITUMASTIC OR EPOXY PAINT.
2. WHERE TWO DIFFERENT METALS ARE TO BE IN CONTACT, THEY MUST BE SEPARATED BY A 1/32" NEOPRENE GASKET.
3. HANDRAILS, GUARDRAILS, POSTS, BRACKETS AND MOUNTINGSSHALL MEET THE PROJECT BUILDING CODE AND OCCUPATIONAL SAFETY AND HEALTH ADMINISTRATION (OSHA) LOADING REQUIREMENTS.
4. TOP OF ALL GUARDRAILS SHOULD BE 42" HIGH ABOVE THE FINISH FLOOR OR WALKWAY. THE CLEAR DISTANCE BETWEEN THE TOP AND INTERMEDIATE RAILS MEASURED AT RIGHT ANGLES TO THE RAILS SHALL NOT EXCEED 21".
5. ALL WALKWAYS SHALL USE GRATING UNLESS CHECKERED PLATE IS SHOWN ELSEWHERE ON THE DRAWINGS.

| REV. NO. | DATE | DRWN | CHKD | REMARKS |
|---|---|---|---|---|

DESIGNED BY: E. RIVERA
DRAWN BY: M. TRAPP
SHEET CHK'D BY: K. FRANCOFORTE
CROSS CHK'D BY: R. HAGAMAN
APPROVED BY: E. RIVERA
DATE: FEBRUARY 2020

CDM Smith
4651 Salisbury Road, Suite 420
Jacksonville, FL 32256
Tel: (904) 731-7109
FL COA No. EB-0000020

JEA

WILSON BLVD. (180-45) AND 118th ST. (180-47)
MASTER PUMP STATION IMPROVEMENTS

STRUCTURAL DETAILS

PROJECT NO. 6103-234169
FILE NAME: SD04STDT.DWG
SHEET NO.
SD-4

60% SUBMITTAL - NOT FOR CONSTRUCTION

XREFs: [CDMS_2234] Images: []
Last saved by: RIVERAEA Time: 2/14/2020 6:06:11 PM
pw:\\cdmsmith-az02-pw.bentley.com:PW_XM1\6103\234169 JEA PDB\04 Design Services NM_60%\04 Structural\10 CADD\SD04STDT.dwg
© 2020 CDM SMITH ALL RIGHTS RESERVED.
REUSE OF DOCUMENTS: THESE DOCUMENTS AND DESIGNS PROVIDED BY PROFESSIONAL SERVICE, INCORPORATED HEREIN, ARE THE PROPERTY OF CDM SMITH AND ARE NOT TO BE USED, IN WHOLE OR PART, FOR ANY OTHER PROJECT WITHOUT THE WRITTEN AUTHORIZATION OF CDM SMITH.

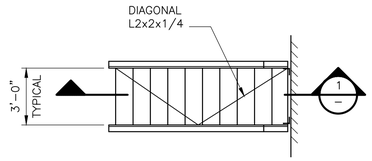


PLAN
1/4" = 1'-0"

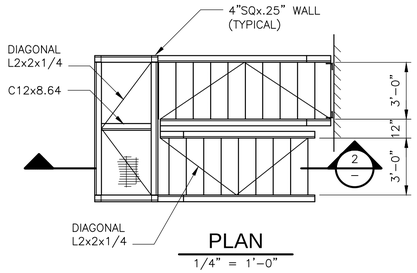


PLAN
1/4" = 1'-0"

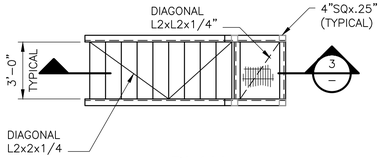


PLAN
1/4" = 1'-0"

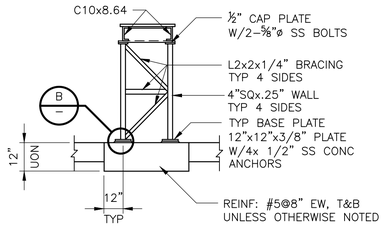


TYPICAL PLATFORM BRACING
DETAIL A
1/4" = 1'-0"

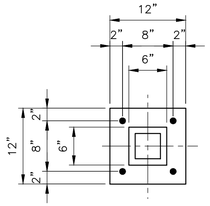


COLUMN BASE PLATE
DETAIL B
1" = 1'-0"

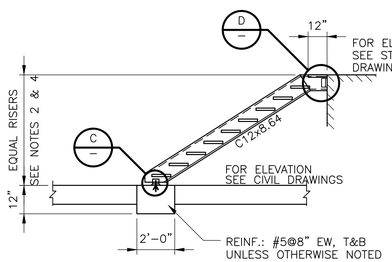


TYPE "T-1"
SECTION 1
1/4" = 1'-0"

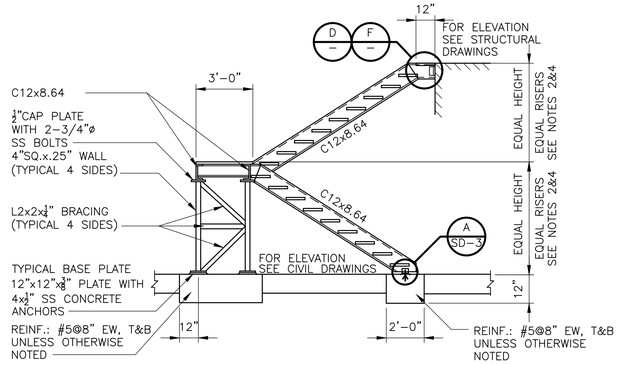


TYPE "T-2"
SECTION 2
1/4" = 1'-0"

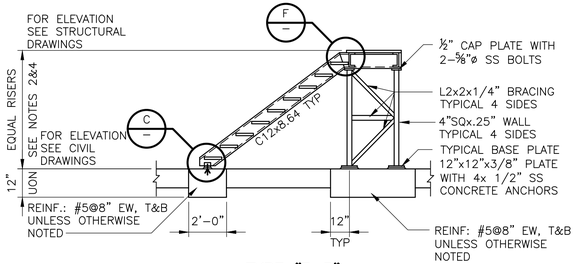


TYPE "T-3"
SECTION 3
1/4" = 1'-0"

NOTES:

1. ALL CONSTRUCTION IS ALUMINUM PER SPECIFICATIONS.
2. RISERS: 7" MAXIMUM, UNO
   TREADS: 11" MAXIMUM, PLUS 1" NOSING, UNO
3. TYPICAL STAIR WIDTH IS 3'-0" UNLESS NOTED OTHERWISE.
4. MAXIMUM HEIGHT FOR INDIVIDUAL FLIGHT OF STAIRS = 12'-0".
5. STAIR STRINGER DIAGONAL BRACING MAY BE OMITTED WHERE STRINGER LENGTH IS LESS THAN 10'-0".
6. IF STAIR HEIGHT IS LESS THAN 6'-0", STAIR STRINGER SIZE MAY BE REDUCED TO C10x8.64.
7. TYPICAL PAD WIDTH IS STAIR WIDTH + 6" EACH SIDE.
8. ALUMINUM EMBEDDED IN CONCRETE MUST BE PAINTED WITH ONE SHOP COAT OF HEAVY BITUMASTIC.
9. ALUMINUM SHAPES IN CONTACT WITH CONCRETE MUST BE SEPARATED BY A 1/32" NEOPRENE GASKET OR ANY CASE WHERE TWO DIFFERENT METALS ARE TO BE IN CONTACT. A NEOPRENE GASKET MUST BE PROVIDED. HANDRAILS, GUARDRAILS, POSTS, BRACKETS AND MOUNTINGS
10. SHALL MEET THE FLORIDA BUILDING CODE (FBC) AND OCCUPATIONAL SAFETY AND HEALTH ADMINISTRATION (OSHA) LOADING REQUIREMENTS.
11. TOP OF ALL GUARDRAILS SHOULD BE 42" HIGH ABOVE THE FINISH FLOOR OR WALKWAY. THE CLEAR DISTANCE BETWEEN THE TOP AND INTERMEDIATE RAILS MEASURED AT RIGHT ANGLES TO THE RAILS SHALL NOT EXCEED 21".
12. ALL WALKWAYS SHALL USE GRATING UNLESS NOTED OTHERWISE.

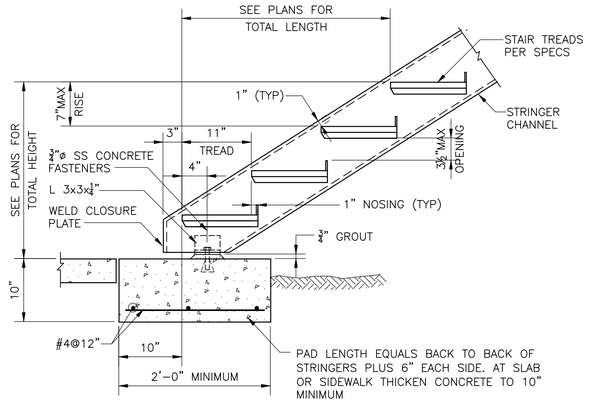


STAIR STRINGER TO CONCRETE BASE
DETAIL C
NTS

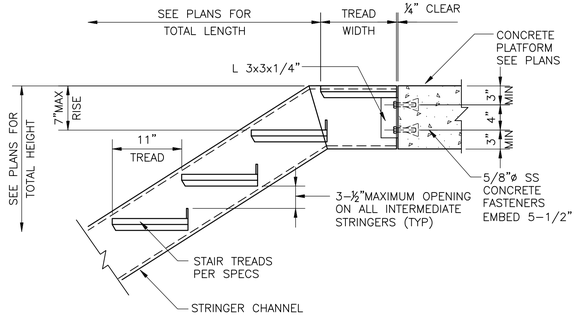


STAIR STRINGER TO CONCRETE PLATFORM TOP
DETAIL D
NTS

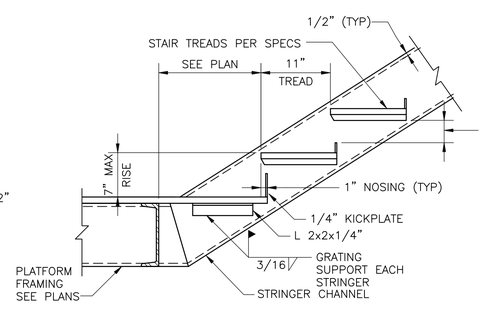


STAIR STRINGER TO PLATFORM
DETAIL E
NTS

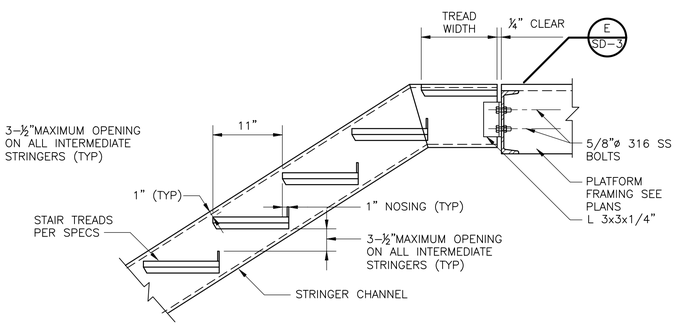


STAIR STRINGER TO STEEL/ALUMINUM PLATFORM TOP
DETAIL F
NTS

| REV. NO. | DATE | DRWN | CHKD | REMARKS |
|---|---|---|---|---|

DESIGNED BY: E. RIVERA
DRAWN BY: M. TRAPP
SHEET CHK'D BY: K. FRANCOFORTE
CROSS CHK'D BY: R. HAGAMAN
APPROVED BY: E. RIVERA
DATE: JANUARY 2020

CDM Smith
4651 Salisbury Road, Suite 420
Jacksonville, FL 32256
Tel: (904) 731-7109
FL COA No. EB-0000020

JEA

WILSON BLVD. (180-45) AND 118th ST. (180-47)
MASTER PUMP STATION IMPROVEMENTS

STRUCTURAL DETAILS

PROJECT NO. 6103-234169
FILE NAME: SD05STDT.DWG

SHEET NO.
SD-5

60% SUBMITTAL - NOT FOR CONSTRUCTION

XREFs: [CDMS_2234] Images: []
Last saved by: SCHAVOPC Time: 1/31/2020 9:57:55 AM
pw:\\pw.cdmsmith.com:PW_XM\6103\234169 JEA PDB\04 Design Services NM_60%\04 Structural\10 CADD\SD05STDT.dwg
© 2020 CDM SMITH ALL RIGHTS RESERVED.
REUSE OF DOCUMENTS: THESE DOCUMENTS AND DESIGNS PROVIDED BY PROFESSIONAL SERVICE, INCORPORATED HEREIN, ARE THE PROPERTY OF CDM SMITH AND ARE NOT TO BE USED, IN WHOLE OR PART, FOR ANY OTHER PROJECT WITHOUT THE WRITTEN AUTHORIZATION OF CDM SMITH.

# SYMBOLS (ABBREVIATIONS)

| | |
|---|---|
| UNCLASSIFIED. TYPE AS SHOWN ON THE DRAWINGS ADJACENT TO SYMBOL | |
| GATE VALVE | (GV) |
| KNIFE GATE VALVE | (KG) |
| GLOBE VALVE | (GLV) |
| BALL VALVE | (BV) |
| 3–WAY BALL VALVE | (BV3) |
| 4–WAY BALL VALVE | (BV4) |
| RECYCLE CONTROL VALVE | (RCV) |
| CONE VALVE | (CNV) |
| NEEDLE VALVE | (NV) |
| PINCH VALVE | |
| DIAPHRAGM VALVE | (DV) |
| BUTTERFLY VALVE | (BFV) |
| PLUG VALVE, GENERAL SYMBOLS | (PV) |
| 3–WAY PLUG VALVE | (PV3) |
| 4–WAY PLUG VALVE | (PV4) |
| CHECK VALVE, GENERAL SYMBOLS | (CV) |
| SLANTING DISK CHECK VALVE | (SDCV) |
| BALL CHECK VALVE | (BCV) |
| DOUBLE DOOR CHECK VALVE | (DDCV) |
| SOLENOID VALVE | (SV) |
| MOTOR OPERERATED VALVE | (MOV) |
| 3–WAY SOLENOID VALVE | (SV3) |
| 4–WAY SOLENOID VALVE | (SV4) |
| ANGLE VALVE | (AV) |
| QUICK CONNECT COUPLING | (QCC) |
| SLUICE GATE | (SLG) |
| BULKHEAD GATE | (BHG) |
| SLIDE GATE | (SG) |
| WEIR SLIDE GATE | (WG) |
| STOP PLATE GUIDES | (SPG) |
| FLAP VALVE | (FLV) |
| SHEAR GATE | (SHG) |
| MUD VALVE | (MV) |
| ROTOMETER | (RM) |

# SYMBOLS

| | |
|---|---|
| PRESSURE REDUCING REGULATOR SELF CONTAINED | (PCV) |
| PRESSURE REDUCING REGULATOR WITH EXTERNAL PRESSURE TAP | (PCV) |
| DIFFERENTIAL PRESSURE REDUCING REGULATOR WITH INTERNAL AND EXTERNAL PRESSURE TAPS | (PDCV) |
| PRESSURE RELIEF OR SAFETY VALVE, STRAIGHT–THROUGH PATTERN, SPRING OR WEIGHT–LOADED, OR WITH INTEGRAL PILOT | (PSV) |
| PRESSURE RELIEF OR SAFETY VALVE, GENERAL SYMBOL | (PSV) |
| VACUUM RELIEF VALVE, GENERAL SYMBOL | (VRV) |
| PRESSURE AND VACUUM RELIEF VALVE, SPRING OR WEIGHT–LOADED,OR WITH INTEGRAL PILOT | (PSV) |
| RUPTURE DISK OR SAFETY HEAD FOR PRESSURE RELIEF | (PSE) |
| RUPTURE DISK OR SAFETY HEAD FOR VACUUM RELIEF | (PSE) |
| PRESSURE AND VACUUM RELIEF MANHOLE COVER | (PSE) |
| SLIDE PLATE | (SP) |
| VD MANUAL VOLUME DAMPER | |
| BDD BACKDRAFT DAMPER | |
| FOOT VALVE | |

# VALVE ACTUATORS

- DIAPHRAGM, SPRING OPPOSED
- DIAPHRAGM, SPRING OPPOSED WITH POSITIONER
- DIAPHRAGM, PRESSURE–BALANCED
- M — ROTARY MOTOR. (SHOWN TYPICALLY WITH ELECTRIC SIGNAL, MAY BE HYDRAULIC OR PNEUMATIC)
- S — SOLENOID
- CYLINDER, SINGLE–ACTING, SPRING OPPOSED WITHOUT POSITIONER OR PILOT.
- CYLINDER, DOUBLE ACTING, WITHOUT POSITIONER OR PILOT
- EXAMPLE OF CYLINDER WITH POSITIONER
- ANY CYLINDER THAT IS ASSEMBLED WITH A PILOT SO THAT ASSEMBLY IS ACTUATED BY ONE CONTROLLED INPUT. PILOT MAY BE POSITIONER, SOLENOID VALVE, SIGNAL CONVERTER, etc.
- FLOAT ACTUATOR
- FLOAT ACTUATOR WITH PILOT VALVE

# PIPE AND FITTING SYMBOLS

| DOUBLE LINE PIPING | SINGLE LINE PIPING | |
|---|---|---|
| | 3" PIPE & SMALLER | PROCESS PIPING: |
| | | EXISTING PROCESS PIPING |
| | | FUTURE PROCESS PIPING |
| | | WELDED JOINT |
| SEE NOTE 2 | | FLANGED JOINT SIMPLIFIED REPRESENTATION. (SEE NOTE 1 ) |
| | | FLANGED JOINT (SEE NOTE 1 ) |
| (F) OR (R) | | COUPLING FOR GROOVED END JOINTS: (F) FLEXIBLE (R) RIGID |
| | | MECHANICAL JOINT (SEE NOTE 1 ) |
| | | PUSH ON JOINT OR CAULKED BELL & SPIGOT JOINT (SEE NOTE 1 ) |
| | | FLANGE x PLAIN END PIPE COUPLING (FLANGE ADAPTOR) |
| | | PIPE COUPLING (SLEEVE–TYPE) |
| (A) — ONE OR TWO LETTERS IDENTIFYING THE TYPE. REFER TO SPECIFICATIONS. | (A) | FLEXIBLE COUPLING OR EXPANSION JOINT (SLEEVE TYPE) |
| (B) | (B) | FLEXIBLE COUPLING OR EXPANSION JOINT (BELLOWS TYPE) |
| | | FLANGE GUARD |
| | | VALVE IN VERTICAL PIPE SHOWN IN PLAN VIEW |

## EXISTING FACILITIES SYMBOLOGY AND ANNOTATION

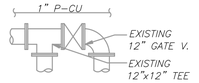


## EXISTING FACILITIES DEMOLITION SYMBOLOGY AND ANNOTATION

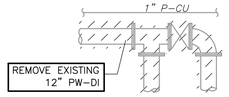


## PIPE AND FITTING SYMBOLS NOTES:

1. GENERIC JOINT SYMBOL IS USED FOR ALL SINGLE LINE PIPING SHOWN ON THE INTERIOR AND EXTERIOR PIPING DRAWINGS.
2. BOTH, DETAILED AND SIMPLIFIED FLANGE REPRESENTATION SYMBOLS MAY BE SHOWN ON THE DRAWINGS.
3. UNLESS MODIFIED BY THE GENERAL PROJECT NOTES OR DETAILED ON THE LAYOUT AND SCHEMATIC DRAWINGS PIPE AND FITTING JOINT REQUIREMENTS FOR THE VARIOUS PIPE MATERIALS ARE DEFINED IN THE SPECIFICATIONS AND ARE INDICATED ON THE PROCESS PIPE SCHEDULES

# PROCESS PIPE IDENTIFICATION

## PROCESS FLOW STREAMS

| | |
|---|---|
| D | DRAIN |
| FM | FORCE MAIN |
| NPW | NON POTABLE WATER |
| PW | POTABLE WATER |
| SARV | SEWAGE AIR RELEASE VALVE |

## PIPE MATERIALS

| | |
|---|---|
| DI | DUCTILE IRON |
| PVC | POLYVINYL CHLORIDE PIPE |
| RC | REINFORCED CONCRETE SEWER PIPE |
| SST | STAINLESS STEEL |

## PIPE JOINTS AND FITTINGS

| | |
|---|---|
| BF | – BLIND FLANGE |
| ECC | – ECCENTRIC |
| FLG | – FLANGE |
| HFAC | – HARNESSED FLANGED ADAPTER COUPLING |
| LR | – LONG RADIUS |
| MJ | – MECHANICAL JOINT |
| PE | – PLAIN END |
| RED | – REDUCER |
| REST | – RESTRAINED |
| TRD | – THREADED |

## PIPE TAG

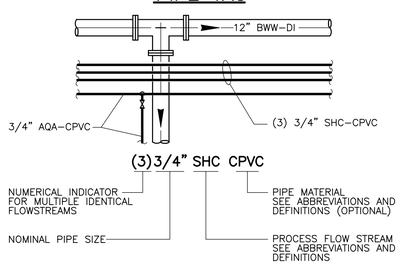


## MISCELLANEOUS SYMBOLS

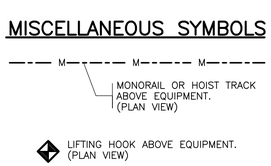


LEGENDS SYMBOLS AND ABBREVIATIONS SHOWN ON SHEET M–1 INDICATE STANDARD SYMBOLS AND ABBREVIATIONS AND ARE PERTINENT TO THE CONDITIONS ON THIS SET OF DRAWINGS TO THE EXTENT APPLICABLE.

ADDITIONAL LEGENDS AND/OR ABBREVIATIONS MAY APPEAR IN THIS SET OF DRAWINGS TO INDICATE SPECIFIC CONDITIONS.

**GENERAL NOTE**

THIS IS A STANDARD LEGEND. SOME SYMBOLS MAY NOT APPEAR ON THE DRAWINGS.

NOTE:
FOR ALL VALVE TAGGING REFER TO P&ID'S

DATE:
JONATHAN Z GOLDMAN
PE NO. 0048925

| REV. NO. | DATE | DRWN | CHKD | REMARKS |
|---|---|---|---|---|
| | | | | |

DESIGNED BY: X
DRAWN BY: A. NUNES
SHEET CHK'D BY: X
CROSS CHK'D BY: X
APPROVED BY: X
DATE: JANUARY 2020


CDM Smith
4651 Salisbury Road, Suite 420
Jacksonville, FL 32256
Tel: (904) 731-7109
FL COA No. EB-0000020


JEA

WILSON BLVD. (180-45) AND 118th ST. (180-47)
MASTER PUMP STATION IMPROVEMENTS

MECHANICAL LEGEND, SYMBOLS AND ABBREVIATIONS

PROJECT NO. 6103–234169
FILE NAME: M001LEGD.DWG

SHEET NO.
M-1

60% SUBMITTAL - NOT FOR CONSTRUCTION


XREFs: [CDMS_2234] Images: []
Last saved by: NUNESAL Time: 2/6/2020 1:35:46 PM
p:\\pw.cdmsmith.com\PW_XM1\6103\234169 JEA PDB\04 Design Services NM_60%\05 Process Mechanical\10 CADD\M001LEGD.dwg
©2020 CDM SMITH ALL RIGHTS RESERVED.
REUSE OF DOCUMENTS: THESE DOCUMENTS AND DESIGNS PROVIDED BY PROFESSIONAL SERVICE, INCORPORATED HEREIN, ARE THE PROPERTY OF CDM SMITH AND ARE NOT TO BE USED, IN WHOLE OR PART, FOR ANY OTHER PROJECT WITHOUT THE WRITTEN AUTHORIZATION OF CDM SMITH.

XREFs: [CDMS_2234] Images: []
Last saved by: NUNESAL Time: 2/5/2020 1:36:40 PM
pw:\\pw.cdmsmith.com:PW_XM1\6103\234169 JEA PDB\04 Design Services NM_60%\05 Process Mechanical\10 CADD\M002PSPS.dwg
©2020 CDM SMITH ALL RIGHTS RESERVED.
REUSE OF DOCUMENTS: THESE DOCUMENTS AND DESIGNS PROVIDED BY PROFESSIONAL SERVICE, INCORPORATED HEREIN, ARE THE PROPERTY OF CDM SMITH AND ARE NOT TO BE USED, IN WHOLE OR PART, FOR ANY OTHER PROJECT WITHOUT THE WRITTEN AUTHORIZATION OF CDM SMITH.

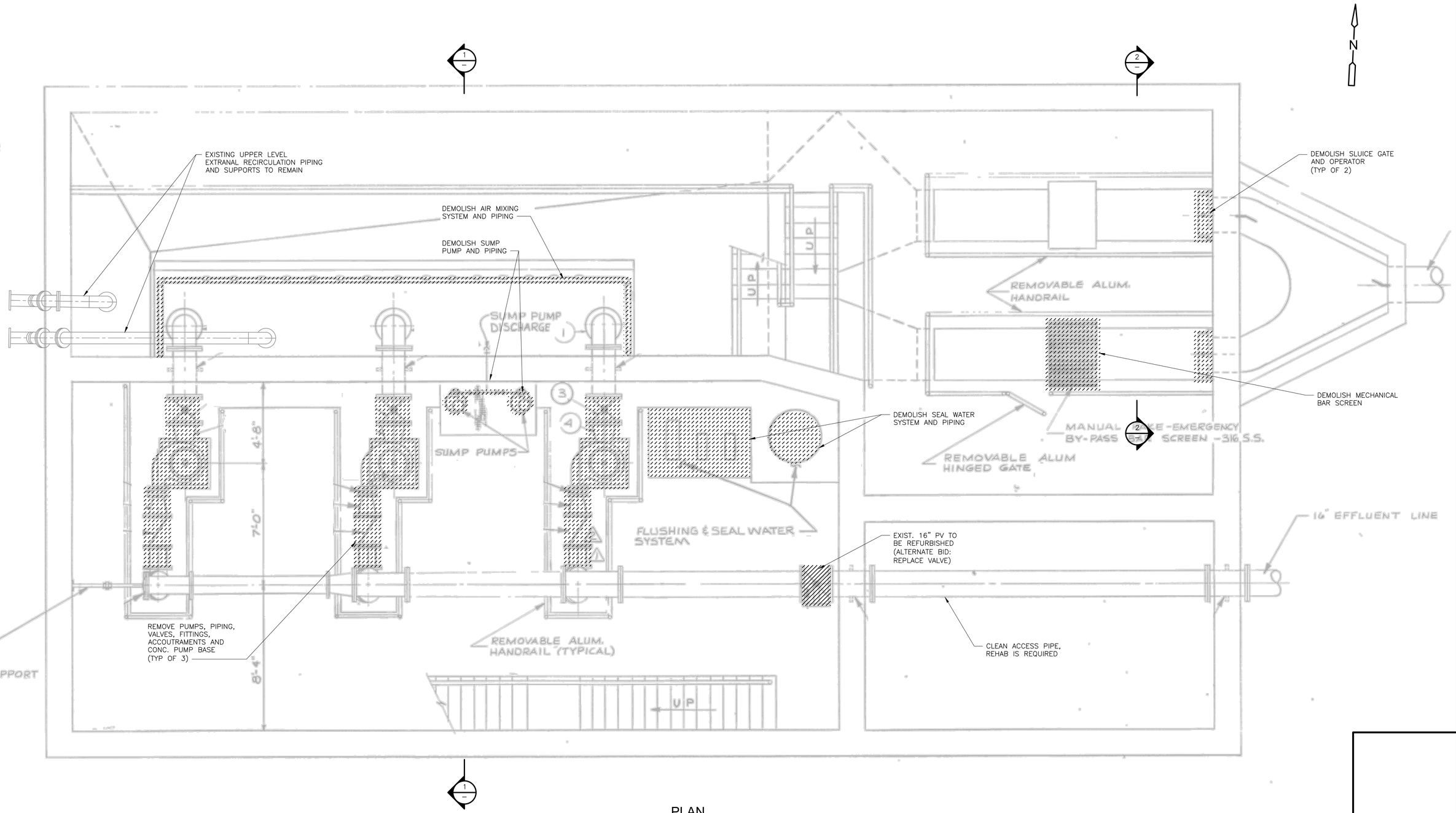


PLAN
3/8" = 1'-0"

| REV. NO. | DATE | DRWN | CHKD | REMARKS |
|---|---|---|---|---|
| | | | | |

DESIGNED BY: X
DRAWN BY: A. NUNES
SHEET CHK'D BY: X
CROSS CHK'D BY: X
APPROVED BY: X
DATE: JANUARY 2020

CDM Smith
4651 Salisbury Road, Suite 420
Jacksonville, FL 32256
Tel: (904) 731-7109
FL COA No. EB-0000020

JEA

WILSON BLVD. (180-45) AND 118th ST. (180-47)
MASTER PUMP STATION IMPROVEMENTS

WILSON BLVD. PUMP STATION
LOWER LEVEL DEMOLITION PLAN

DATE:
JONATHAN Z GOLDMAN
PE NO. 0048925

PROJECT NO. 6103-234169
FILE NAME: M002PSPS.DWG

SHEET NO.
M-2

60% SUBMITTAL - NOT FOR CONSTRUCTION

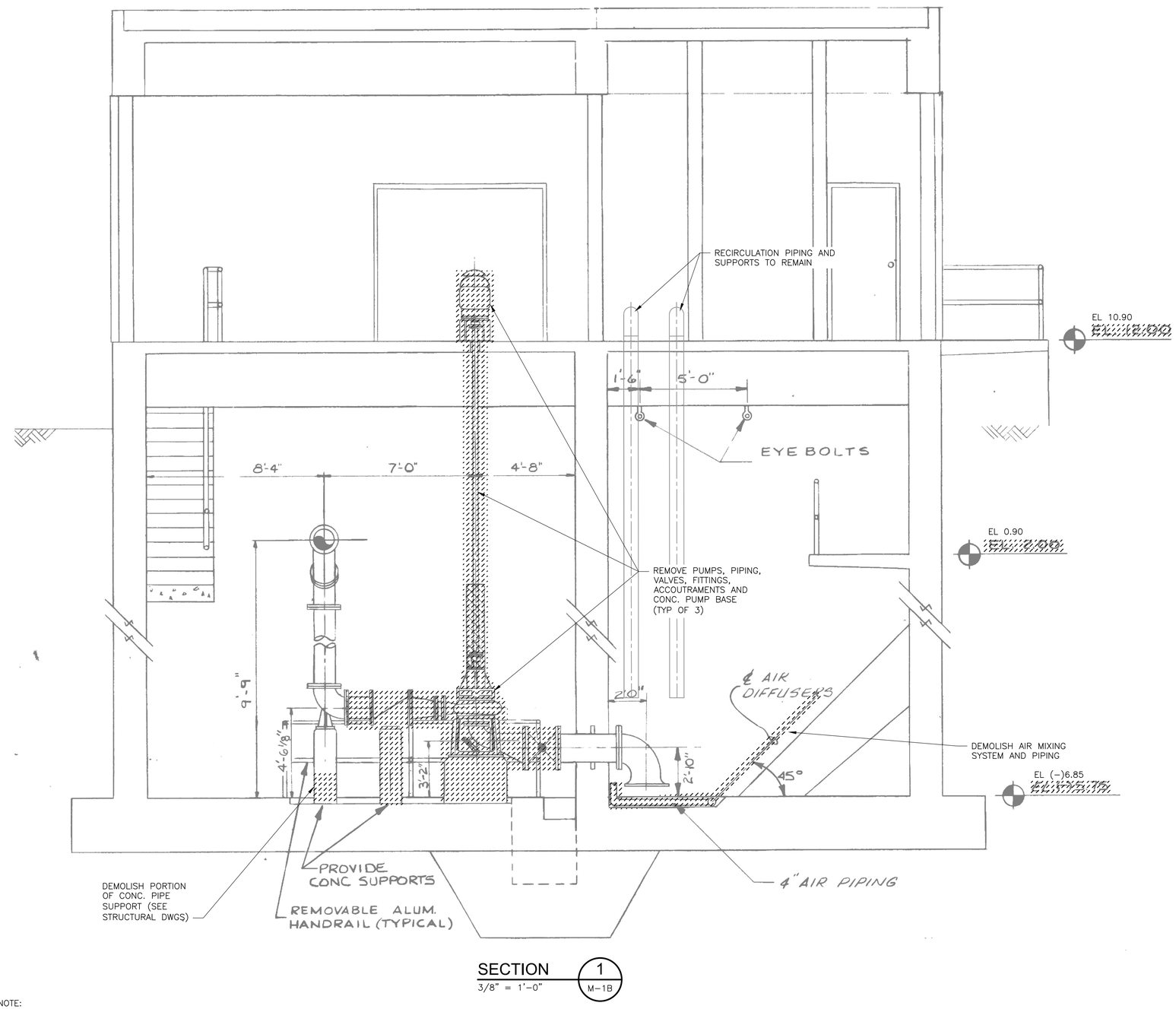


SECTION 1
3/8" = 1'-0"
M-1B

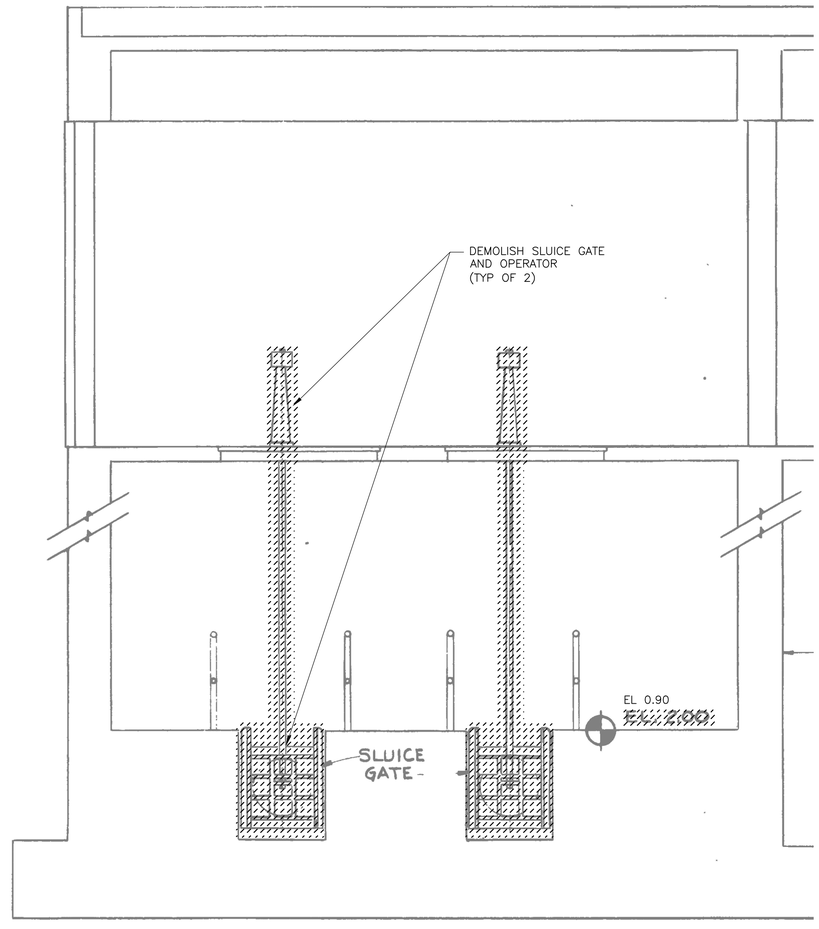


SECTION 2
3/8" = 1'-0"
M-1B

NOTE:
ELEVATIONS ARE BASED ON THE NORTH AMERICAL VERTICAL DATUM OF 1988 (NAVD 1988). AS-BUILTS ELEVATIONS WERE CONVERTED FROM RECORD DRAWINGS BASED ON THE NATIONAL GEODETIC VERTICAL DATUM OF 1929 (NGVD 29), "WITH NAVD 1988 ELEVATION = NGVD 1929 ELEVATION" +1.1 FEET.

| REV. NO. | DATE | DRWN | CHKD | REMARKS |
|---|---|---|---|---|

DESIGNED BY: X
DRAWN BY: A. NUNES
SHEET CHK'D BY: X
CROSS CHK'D BY: X
APPROVED BY: X
DATE: JANUARY 2020

CDM Smith
4651 Salisbury Road, Suite 420
Jacksonville, FL 32256
Tel: (904) 731-7109
FL COA No. EB-0000020

JEA

WILSON BLVD. (180-45) AND 118th ST. (180-47)
MASTER PUMP STATION IMPROVEMENTS

WILSON BLVD. PUMP STATION
LOWER LEVEL DEMOLITION SECTIONS

DATE:
JONATHAN Z GOLDMAN
PE NO. 0048925

PROJECT NO. 6103-234169
FILE NAME: M003PSPS.DWG

SHEET NO.
M-3

60% SUBMITTAL - NOT FOR CONSTRUCTION

XREFs: [CDMS_2234] Images: [IMAGE003, IMAGE006]
Last saved by: NUNESAL Time: 2/5/2020 1:37:40 PM
pw:\\pw.cdmsmith.com:PW_AM1\6103\234169 JEA PDB\04 Design Services NM_60%\05 Process Mechanical\10 CADD\M003PSPS.dwg
©2020 CDM SMITH ALL RIGHTS RESERVED.
REUSE OF DOCUMENTS: THESE DOCUMENTS AND DESIGNS PROVIDED BY PROFESSIONAL SERVICE, INCORPORATED HEREIN, ARE THE PROPERTY OF CDM SMITH AND ARE NOT TO BE USED, IN WHOLE OR PART, FOR ANY OTHER PROJECT WITHOUT THE WRITTEN AUTHORIZATION OF CDM SMITH.

XREFs: [CDMS_2234_MWP000WW_CEP000SS_HWZ002PS_-_Floor Plan_-_01 HVAC PLAN_EXP_SWZ002PS_-_Structural Plan_-_01 FLOOR PLAN EXP_EWZ004PS_WILSON_-_WW WALKWAY PLAN FOR PROCESS_WILSON_-_CROSS SECTION FOR PROCESS EXPORT] Images: []
Last saved by: NUNESAL Time: 2/20/2020 11:46:11 AM
pw:\\cdmsmith-az02-pw.bentley.com:PW_XM1\61033\234169 JEA PDB\04 Design Services NM_60%\05 Process Mechanical\10 CADD\M004PSPS.dwg
© 2020 CDM SMITH ALL RIGHTS RESERVED.
REUSE OF DOCUMENTS: THESE DOCUMENTS AND DESIGNS PROVIDED BY PROFESSIONAL SERVICE, INCORPORATED HEREIN, ARE THE PROPERTY OF CDM SMITH AND ARE NOT TO BE USED, IN WHOLE OR PART, FOR ANY OTHER PROJECT WITHOUT THE WRITTEN AUTHORIZATION OF CDM SMITH.

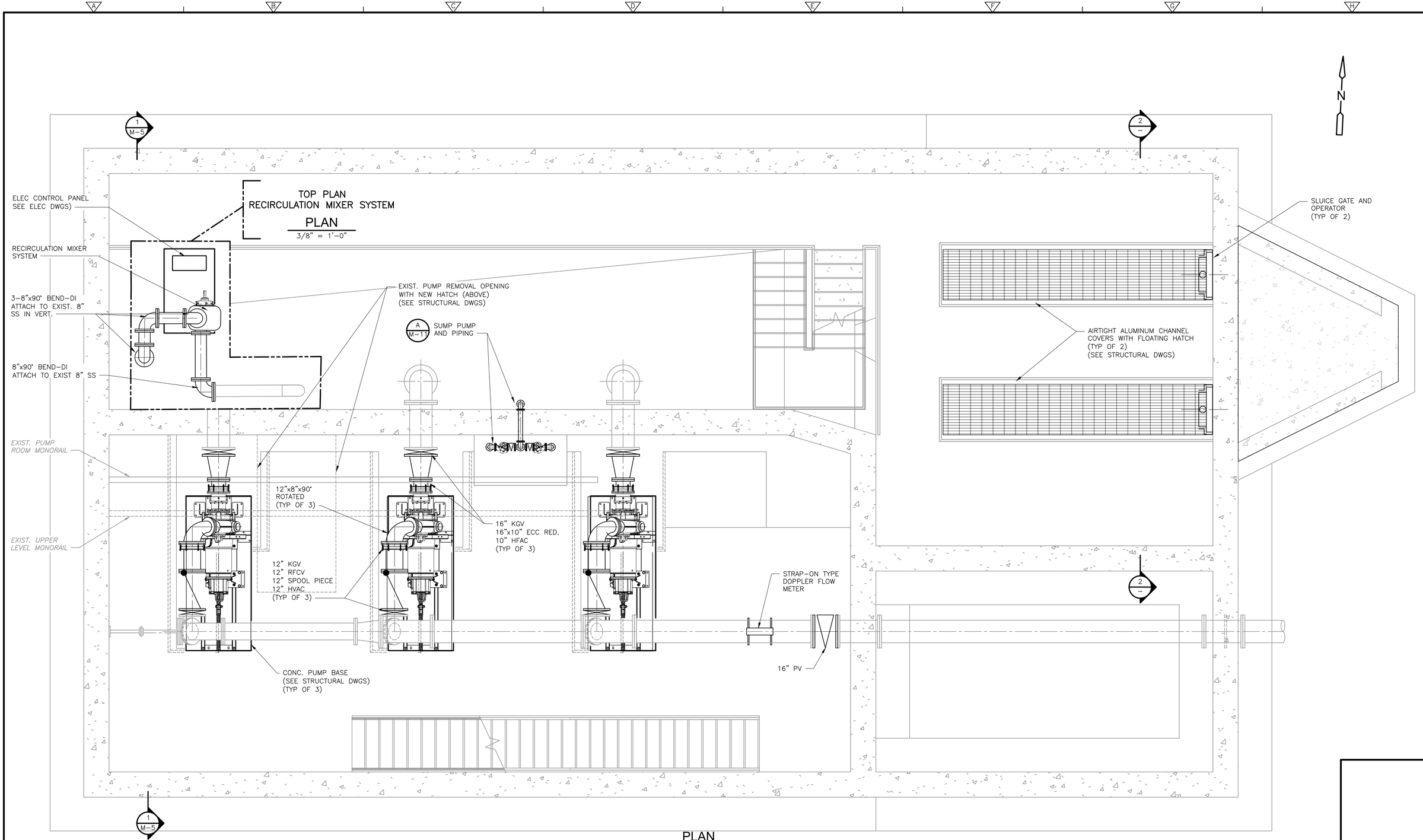


| REV. NO. | DATE | DRWN | CHKD | REMARKS |
|---|---|---|---|---|
| | | | | |

DESIGNED BY: X
DRAWN BY: A. NUNES
SHEET CHK'D BY: X
CROSS CHK'D BY: X
APPROVED BY: X
DATE: FEBRUARY 2020

CDM Smith
4651 Salisbury Road, Suite 420
Jacksonville, FL 32256
Tel: (904) 731-7109
FL COA No. EB-0000020

JEA

WILSON BLVD. (180-45) AND 118th ST. (180-47)
MASTER PUMP STATION IMPROVEMENTS

WILSON BLVD. PUMP STATION
LOWER LEVEL PLAN

DATE:
JONATHAN Z GOLDMAN
PE NO. 0048925

PROJECT NO. 6103-234169
FILE NAME: M004PSPS.DWG

SHEET NO.
M-4

60% SUBMITTAL - NOT FOR CONSTRUCTION

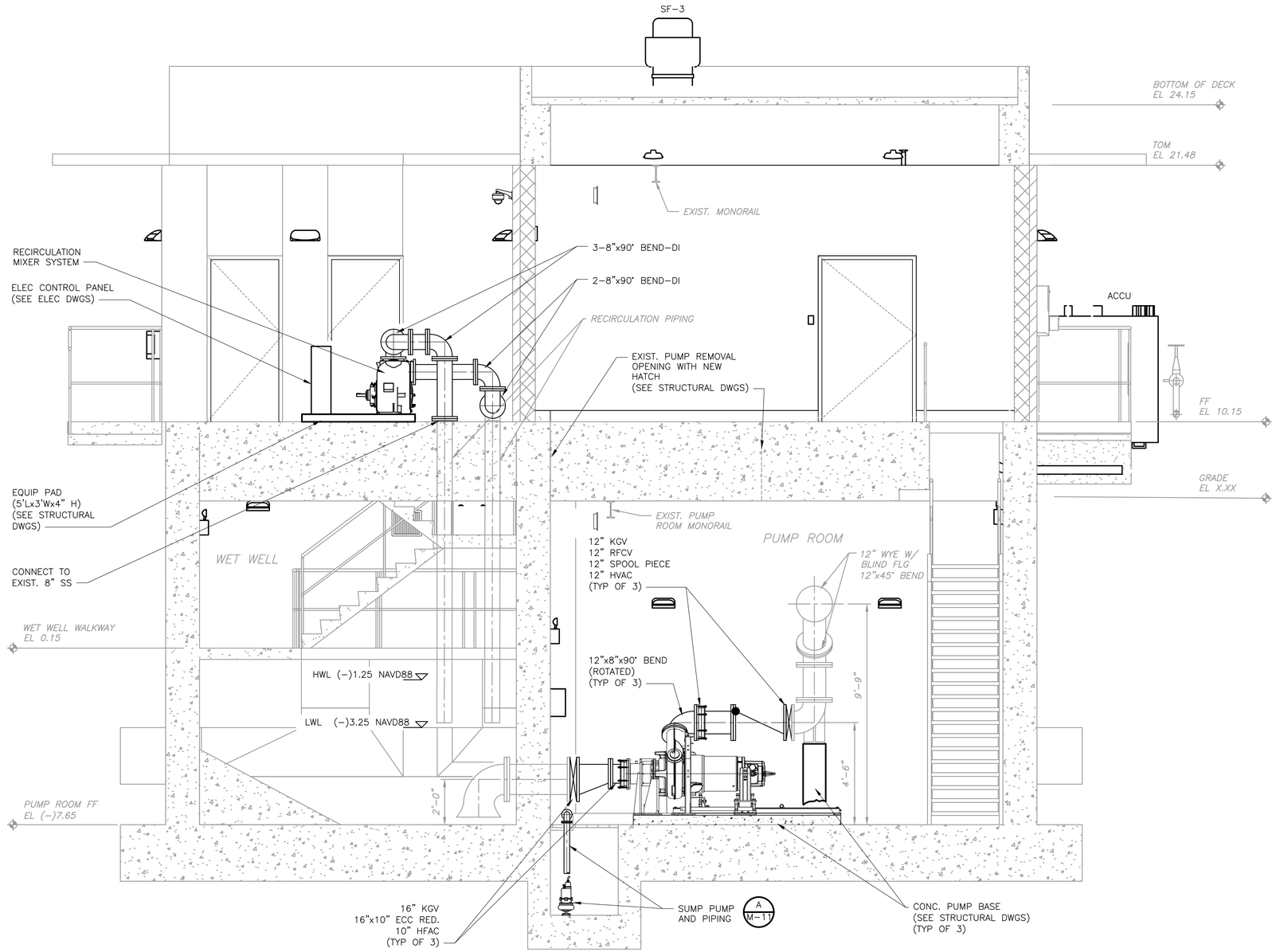


SECTION 1 / M-4

3/8" = 1'-0"

| REV. NO. | DATE | DRWN | CHKD | REMARKS |
|---|---|---|---|---|
| | | | | |

DESIGNED BY: X
DRAWN BY: A. NUNES
SHEET CHK'D BY: X
CROSS CHK'D BY: X
APPROVED BY: X
DATE: FEBRUARY 2020

CDM Smith
4651 Salisbury Road, Suite 420
Jacksonville, FL 32256
Tel: (904) 731-7109
FL COA No. EB-0000020

JEA

WILSON BLVD. (180-45) AND 118th ST. (180-47)
MASTER PUMP STATION IMPROVEMENTS

WILSON BLVD. PUMP STATION
SECTION

DATE:
JONATHAN Z GOLDMAN
PE NO. 0048925

PROJECT NO. 6103-234169
FILE NAME: M005PSPS.DWG

SHEET NO.
M-5

60% SUBMITTAL - NOT FOR CONSTRUCTION

XREFs: [CDMS_2234_MWP000WW_WILSON - CROSS SECTION FOR PROCESS EXPORT, CEP000SS, SWZ002PS - Structural Plan - 01 FLOOR PLAN EXP] Images: []
Last saved by: NUNESAL Time: 2/20/2020 12:00:05 PM
pw:\\cdmsmith-az02-pw.bentley.com:PW_XM1\6103\234169 JEA PDB\04 Design Services NM_60%\05 Process Mechanical\10 CADD\M005PSPS.dwg
©2020 CDM SMITH ALL RIGHTS RESERVED
REUSE OF DOCUMENTS: THESE DOCUMENTS AND DESIGNS PROVIDED BY PROFESSIONAL SERVICE, INCORPORATED HEREIN, ARE THE PROPERTY OF CDM SMITH AND ARE NOT TO BE USED, IN WHOLE OR PART, FOR ANY OTHER PROJECT WITHOUT THE WRITTEN AUTHORIZATION OF CDM SMITH.

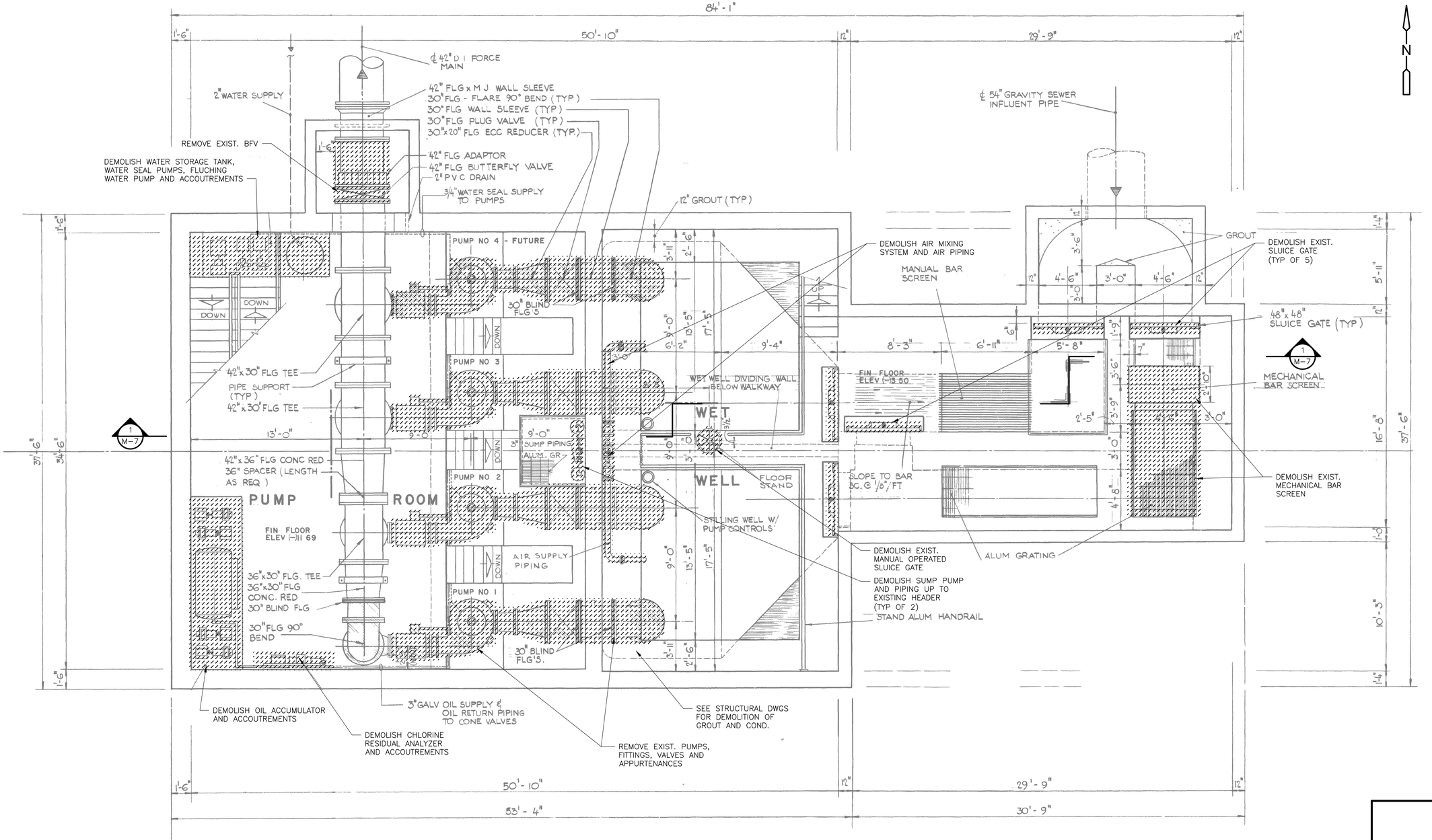


## PLAN

1/4" = 1'-0"

| REV. NO. | DATE | DRWN | CHKD | REMARKS |
|---|---|---|---|---|
| | | | | |

DESIGNED BY: X
DRAWN BY: A. NUNES
SHEET CHK'D BY: X
CROSS CHK'D BY: X
APPROVED BY: X
DATE: JANUARY 2020

CDM Smith
4651 Salisbury Road, Suite 420
Jacksonville, FL 32256
Tel: (904) 731-7109
FL COA No. EB-0000020

JEA

WILSON BLVD. (180-45) AND 118th ST. (180-47)
MASTER PUMP STATION IMPROVEMENTS

118 STREET PUMP STATION
DEMOLITION
LOWER LEVEL PLAN

DATE:
JONATHAN Z GOLDMAN
PE NO. 0048925

PROJECT NO. 6103-234169
FILE NAME: M006PSPS.DWG

SHEET NO.
M-6

60% SUBMITTAL - NOT FOR CONSTRUCTION

xREFs: [CDMS_2234_CEP001SS_AWZ001PS - WET WELL WALKWAY PLAN, MEP003PS] Images: []
Last saved by: NUNESAL Time: 2/5/2020 1:46:43 PM
pw:\\pw.cdmsmith.com:PW_XM1\61103\234169 JEA PDB\04 Design Services NM_608\05 Process Mechanical\10 CADD\M006PSPS.dwg
© 2020 CDM SMITH ALL RIGHTS RESERVED
REUSE OF DOCUMENTS: THESE DOCUMENTS AND DESIGNS PROVIDED BY PROFESSIONAL SERVICE, INCORPORATED HEREIN, ARE THE PROPERTY OF CDM SMITH AND ARE NOT TO BE USED, IN WHOLE OR PART, FOR ANY OTHER PROJECT WITHOUT THE WRITTEN AUTHORIZATION OF CDM SMITH.

xREFs: [CDMS_2234_MEP003PS] Images: []
Last saved by: NUNESAL Time: 2/5/2020 2:03:21 PM
pw:\\pw.cdmsmith.com:PW_XM1\61103\234169 JEA PDB\04 Design Services NM_60%\05 Process Mechanical\10 CADD\M007PSPS.dwg
© 2020 CDM SMITH ALL RIGHTS RESERVED
REUSE OF DOCUMENTS: THESE DOCUMENTS AND DESIGNS PROVIDED BY PROFESSIONAL SERVICE, INCORPORATED HEREIN, ARE THE PROPERTY OF CDM SMITH AND ARE NOT TO BE USED, IN WHOLE OR PART, FOR ANY OTHER PROJECT WITHOUT THE WRITTEN AUTHORIZATION OF CDM SMITH.

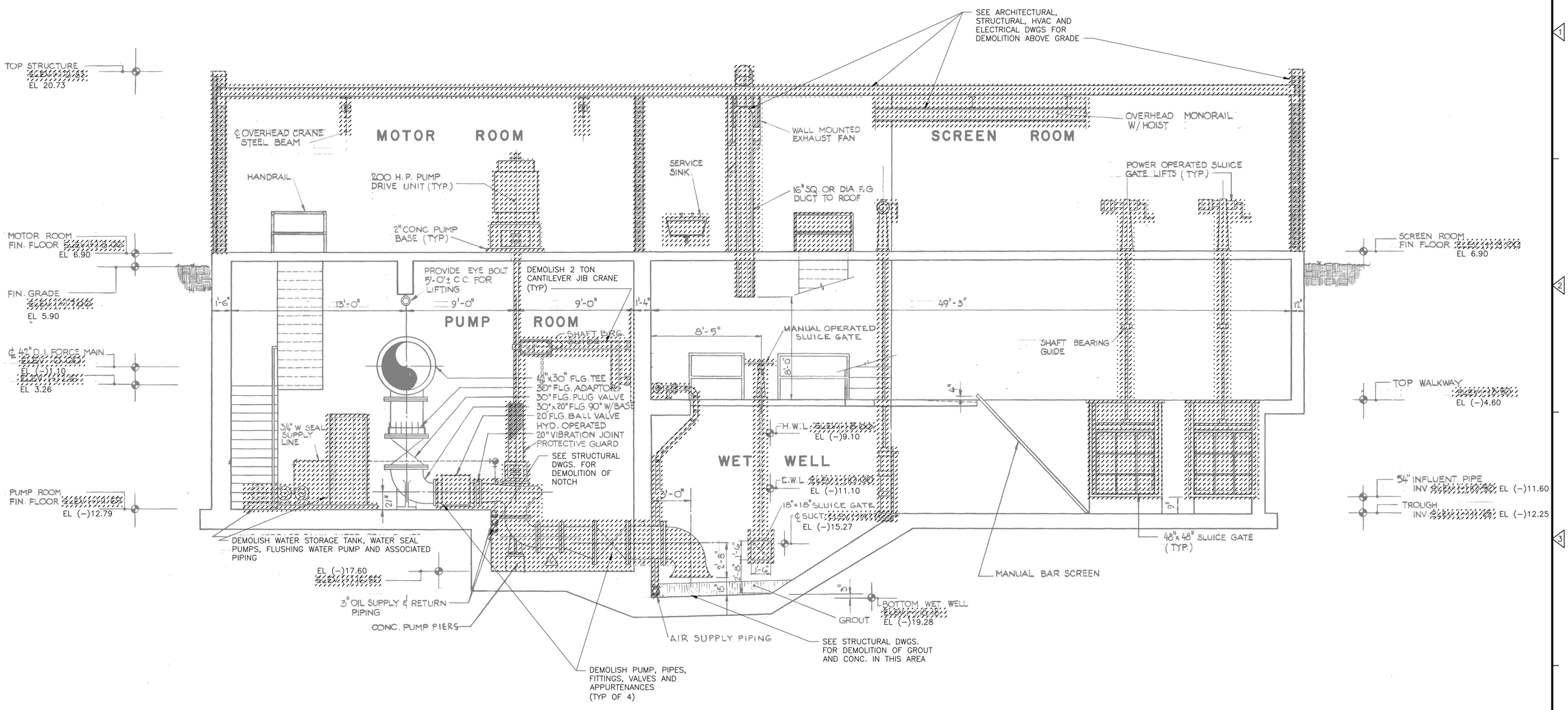


SECTION 1 / 1/4" = 1'–0" (M–6)

NOTE:
ELEVATIONS ARE BASED ON THE NORTH AMERICAL VERTICAL DATUM OF 1988 (NAVD 1988). AS–BUILTS ELEVATIONS WERE CONVERTED FROM RECORD DRAWINGS BASED ON THE NATIONAL GEODETIC VERTICAL DATUM OF 1929 (NGVD 29), "WITH NAVD 1988 ELEVATION = NGVD 1929 ELEVATION" +1.1 FEET.

| REV. NO. | DATE | DRWN | CHKD | REMARKS |
|---|---|---|---|---|

DESIGNED BY: X
DRAWN BY: A. NUNES
SHEET CHK'D BY: X
CROSS CHK'D BY: X
APPROVED BY: X
DATE: JANUARY 2020

CDM Smith
4651 Salisbury Road, Suite 420
Jacksonville, FL 32256
Tel: (904) 731-7109
FL COA No. EB-0000020

JEA

WILSON BLVD. (180-45) AND 118th ST. (180-47)
MASTER PUMP STATION IMPROVEMENTS

118 STREET PUMP STATION
DEMOLITION
SECTION

DATE:
JONATHAN Z GOLDMAN
PE NO. 0048925

PROJECT NO. 6103–234169
FILE NAME: M007PSPS.DWG

SHEET NO.
M-7

60% SUBMITTAL - NOT FOR CONSTRUCTION

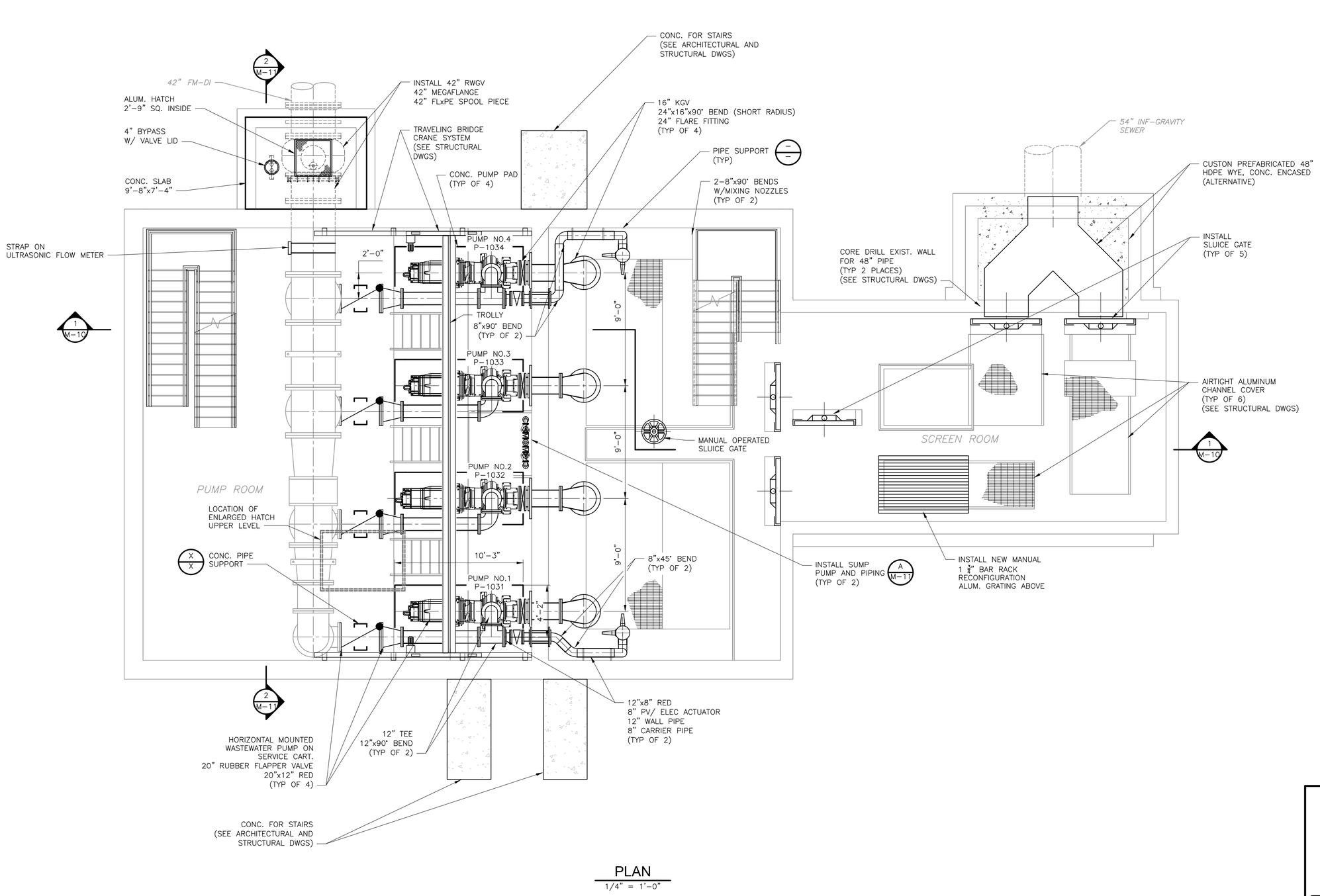


## PLAN

1/4" = 1'-0"

DATE:
JONATHAN Z GOLDMAN
PE NO. 0048925

| REV. NO. | DATE | DRWN | CHKD | REMARKS |
|---|---|---|---|---|

DESIGNED BY: X
DRAWN BY: A. NUNES
SHEET CHK'D BY: X
CROSS CHK'D BY: X
APPROVED BY: X
DATE: FEBRUARY 2020

CDM Smith
4651 Salisbury Road, Suite 420
Jacksonville, FL 32256
Tel: (904) 731-7109
FL COA No. EB-0000020

JEA

WILSON BLVD. (180-45) AND 118th ST. (180-47)
MASTER PUMP STATION IMPROVEMENTS

118 STREET PUMP STATION
LOWER LEVEL PLAN

PROJECT NO. 6103-234169
FILE NAME: M008PSPS.DWG

SHEET NO.
M-8

60% SUBMITTAL - NOT FOR CONSTRUCTION

XREFs: [CDMS_2234_MMP003PS_CEP001SS_ANZ001PS - WET WELL WALKWAY PLAN, ANZ001PS, LONGITUDINAL SECTION] Images: []
Last saved by: NUNESAL Time: 2/20/2020 10:25:04 AM
pw:\\cdmsmith-az02-pw.bentley.com:PW_XM1\6103\234169 JEA PDB\04 Design Services NM_60%\05 Process Mechanical\10 CADD\M008PSPS.dwg
©2020 CDM SMITH ALL RIGHTS RESERVED.
REUSE OF DOCUMENTS: THESE DOCUMENTS AND DESIGNS PROVIDED BY PROFESSIONAL SERVICE, INCORPORATED HEREIN, ARE THE PROPERTY OF CDM SMITH AND ARE NOT TO BE USED, IN WHOLE OR PART, FOR ANY OTHER PROJECT WITHOUT THE WRITTEN AUTHORIZATION OF CDM SMITH.

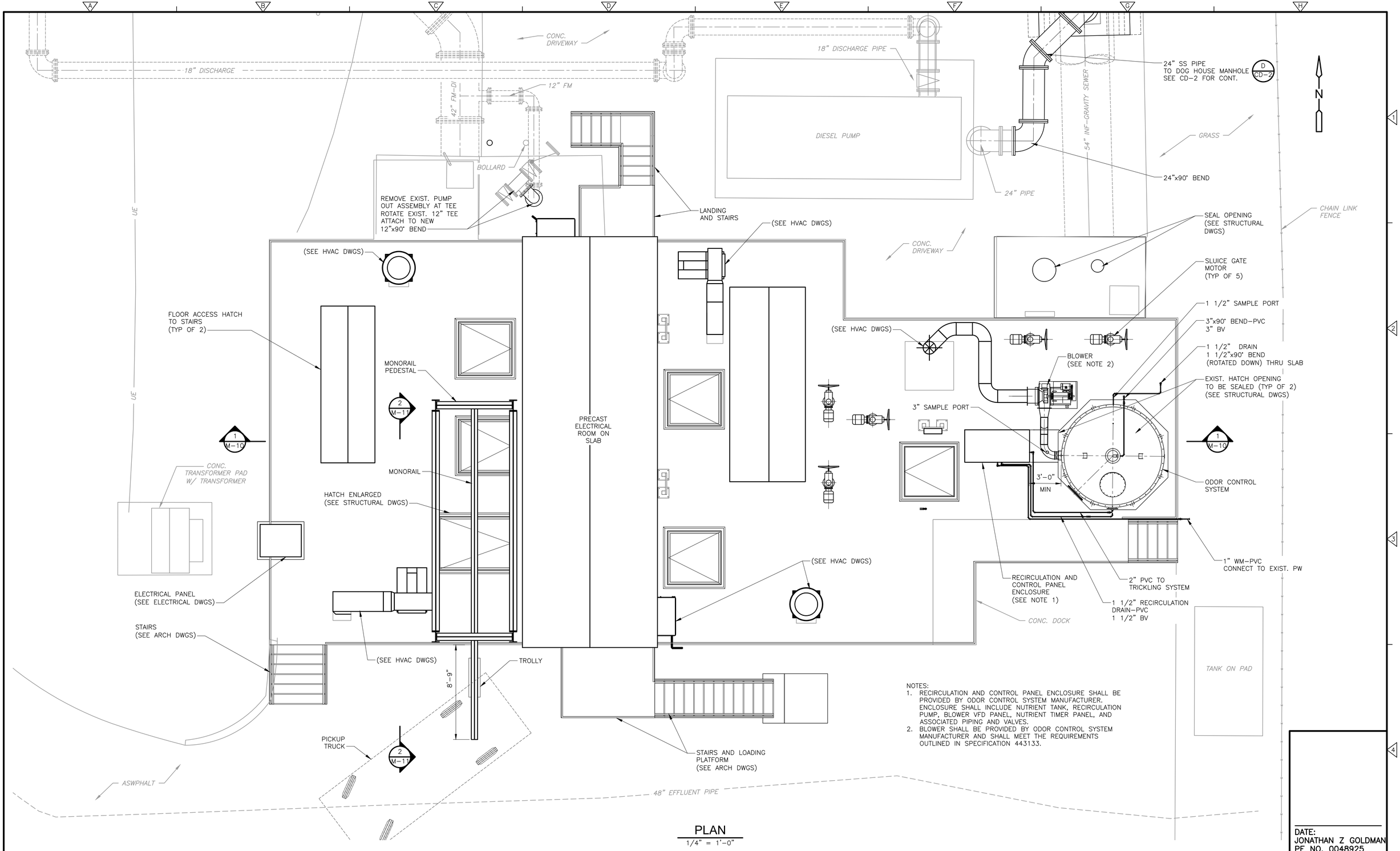


NOTES:
1. RECIRCULATION AND CONTROL PANEL ENCLOSURE SHALL BE PROVIDED BY ODOR CONTROL SYSTEM MANUFACTURER. ENCLOSURE SHALL INCLUDE NUTRIENT TANK, RECIRCULATION PUMP, BLOWER VFD PANEL, NUTRIENT TIMER PANEL, AND ASSOCIATED PIPING AND VALVES.
2. BLOWER SHALL BE PROVIDED BY ODOR CONTROL SYSTEM MANUFACTURER AND SHALL MEET THE REQUIREMENTS OUTLINED IN SPECIFICATION 443133.

## PLAN
1/4" = 1'-0"

| REV. NO. | DATE | DRWN | CHKD | REMARKS |
|---|---|---|---|---|

DESIGNED BY: X
DRAWN BY: A. NUNES
SHEET CHK'D BY: X
CROSS CHK'D BY: X
APPROVED BY: X
DATE: FEBRUARY 2020

CDM Smith
4651 Salisbury Road, Suite 420
Jacksonville, FL 32256
Tel: (904) 731-7109
FL COA No. EB-0000020

JEA

WILSON BLVD. (180-45) AND 118th ST. (180-47)
MASTER PUMP STATION IMPROVEMENTS

118 STREET PUMP STATION
UPPER LEVEL PLAN

DATE:
JONATHAN Z GOLDMAN
PE NO. 0048925

PROJECT NO. 6103-234169
FILE NAME: M009PSPS.DWG

SHEET NO.
M-9

60% SUBMITTAL - NOT FOR CONSTRUCTION

XREFs: [CDMS_2234_AWZ001PS_MWP003PS_CEP001SS_EW2003PS_CWZ003ST] Images: []
Last saved by: NUNESAL Time: 2/20/2020 3:29:40 PM
pw:\\cdmsmith-uz02-pw.bentley.com:PW_XM\6103\234169 JEA PDB\04 Design Services NM_60%\05 Process Mechanical\10 CADD\M009PSPS.dwg
© 2020 CDM SMITH ALL RIGHTS RESERVED
REUSE OF DOCUMENTS: THESE DOCUMENTS AND DESIGNS PROVIDED BY PROFESSIONAL SERVICE, INCORPORATED HEREIN, ARE THE PROPERTY OF CDM SMITH AND ARE NOT TO BE USED, IN WHOLE OR PART, FOR ANY OTHER PROJECT WITHOUT THE WRITTEN AUTHORIZATION OF CDM SMITH.

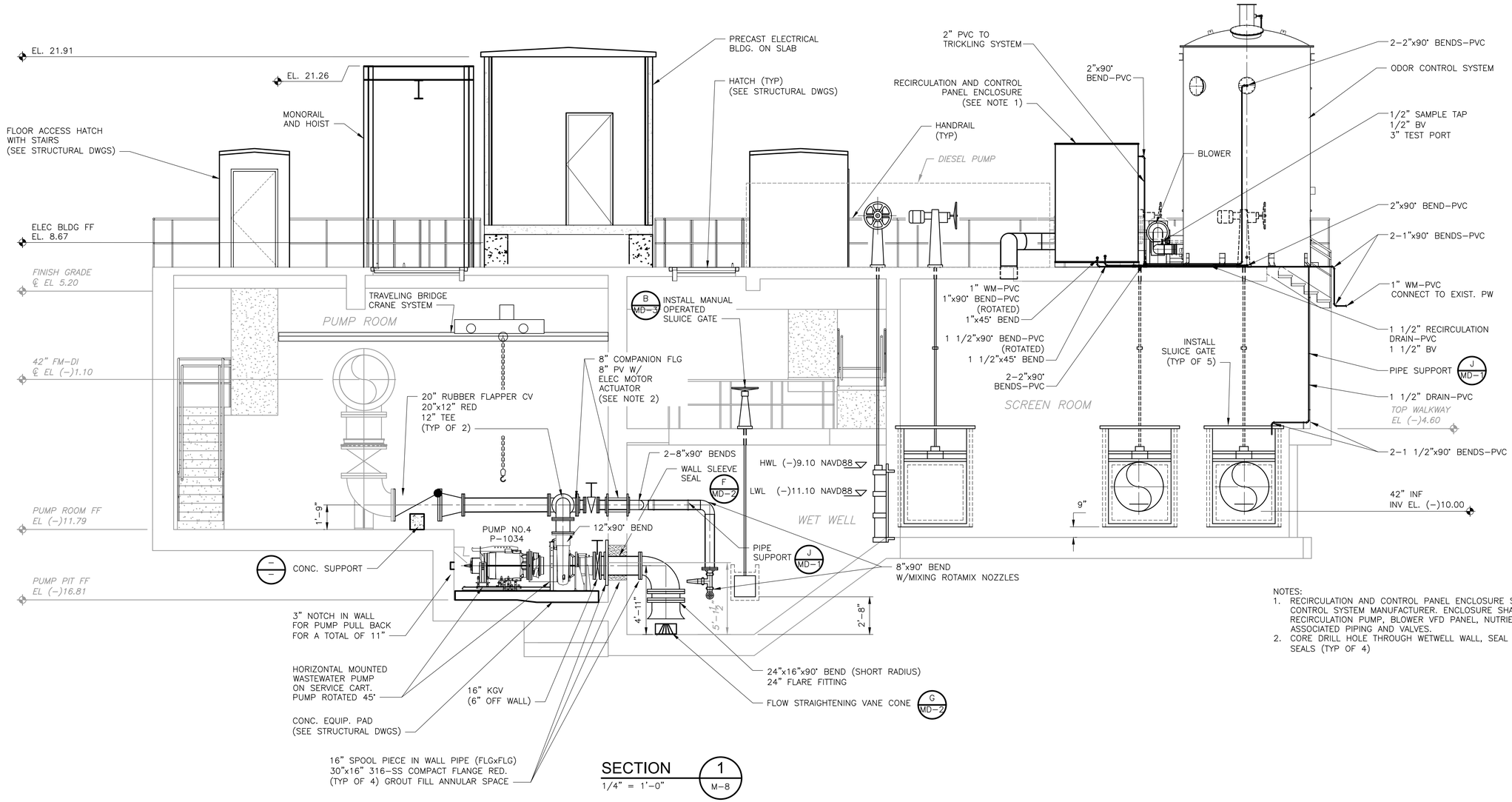


SECTION 1 / M–8
1/4" = 1'–0"

NOTES:
1. RECIRCULATION AND CONTROL PANEL ENCLOSURE SHALL BE PROVIDED BY ODOR CONTROL SYSTEM MANUFACTURER. ENCLOSURE SHALL INCLUDE NUTRIENT TANK, RECIRCULATION PUMP, BLOWER VFD PANEL, NUTRIENT TIMER PANEL, AND ASSOCIATED PIPING AND VALVES.
2. CORE DRILL HOLE THROUGH WETWELL WALL, SEAL ANNULAR SPACE WITH LINK SEALS (TYP OF 4)

| REV. NO. | DATE | DRWN | CHKD | REMARKS |
|---|---|---|---|---|

DESIGNED BY: X
DRAWN BY: A. NUNES
SHEET CHK'D BY: X
CROSS CHK'D BY: X
APPROVED BY: X
DATE: FEBRUARY 2020

CDM Smith
4651 Salisbury Road, Suite 420
Jacksonville, FL 32256
Tel: (904) 731-7109
FL COA No. EB-0000020

JEA

WILSON BLVD. (180-45) AND 118th ST. (180-47)
MASTER PUMP STATION IMPROVEMENTS

118 STREET PUMP STATION
SECTION

DATE:
JONATHAN Z GOLDMAN
PE NO. 0048925

PROJECT NO. 6103–234169
FILE NAME: M010PSPS.DWG

SHEET NO.
M-10

60% SUBMITTAL - NOT FOR CONSTRUCTION

XREFs: [CDMS_2234_MWP003PS_CEP001SS_AWZ001PS – WET WELL WALKWAY PLAN, LONGITUDINAL SECTION] Images: []
Last saved by: NUNESAL Time: 2/20/2020 3:24:03 PM
pw:\\cdmsmith-az02-pw.bentley.com:PW_AM1\6103\234169 JEA PDB\04 Design Services NM_60%\05 Process Mechanical\10 CADD\M010PSPS.dwg
© 2020 CDM SMITH ALL RIGHTS RESERVED.
REUSE OF DOCUMENTS: THESE DOCUMENTS AND DESIGNS PROVIDED BY PROFESSIONAL SERVICE, INCORPORATED HEREIN, ARE THE PROPERTY OF CDM SMITH AND ARE NOT TO BE USED, IN WHOLE OR PART, FOR ANY OTHER PROJECT WITHOUT THE WRITTEN AUTHORIZATION OF CDM SMITH.

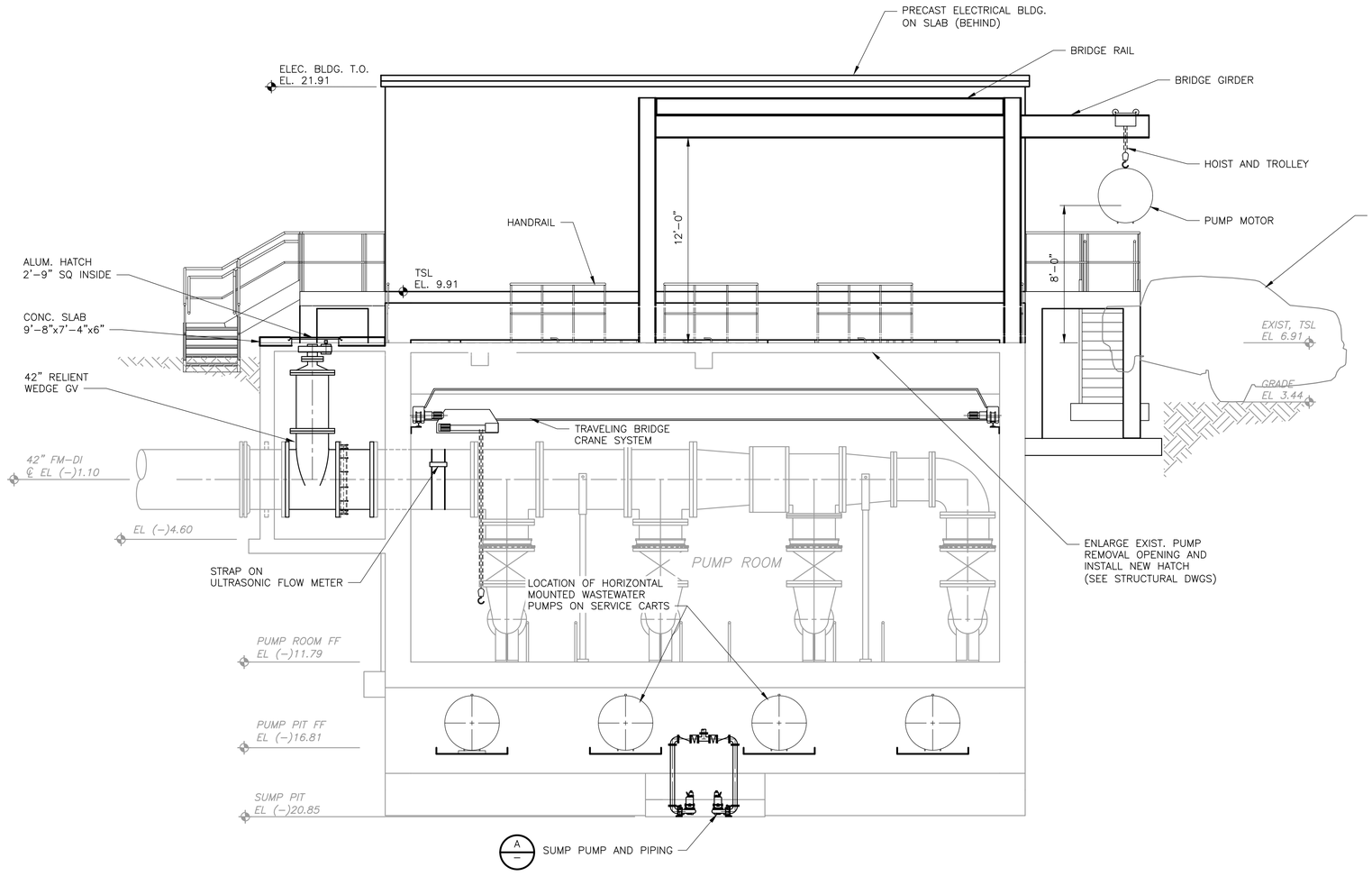


SECTION 2
1/4" = 1'-0"
M-8, M-9

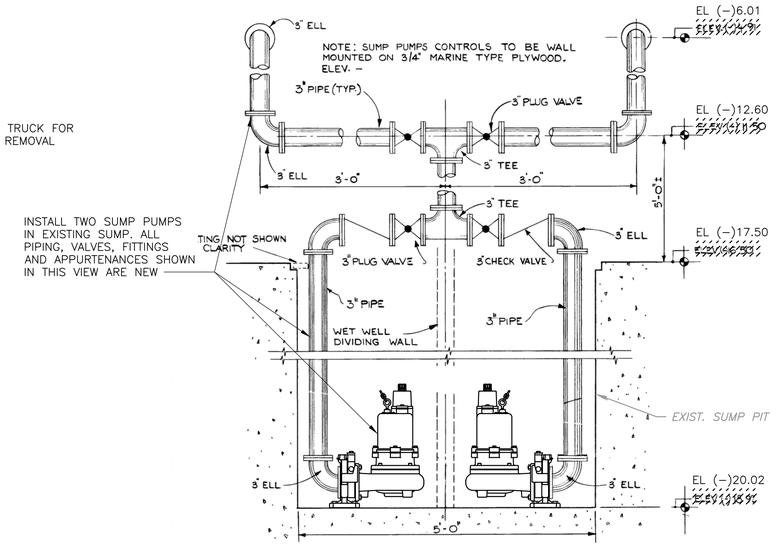


SUMP PUMP
DETAIL A
NTS M-4

DATE:
JONATHAN Z GOLDMAN
PE NO. PE 0048925

| REV. NO. | DATE | DRWN | CHKD | REMARKS |
|---|---|---|---|---|

DESIGNED BY: X
DRAWN BY: A. NUNES
SHEET CHK'D BY: X
CROSS CHK'D BY: X
APPROVED BY: X
DATE: FEBRUARY 2020

CDM Smith
4651 Salisbury Road, Suite 420
Jacksonville, FL 32256
Tel: (904) 731-7109
FL COA No. EB-0000020

JEA

WILSON BLVD. (180-45) AND 118th ST. (180-47)
MASTER PUMP STATION IMPROVEMENTS

118 STREET PUMP STATION
SECTION AND DETAIL

PROJECT NO. 6103-234169
FILE NAME: M011PSPS.DWG
SHEET NO.
M-11

60% SUBMITTAL - NOT FOR CONSTRUCTION

XREFs: [CDMS_2234_MMP003PS_CEP0015S_AWZ001PS - WET WELL WALKWAY PLAN, LONGITUDINAL SECTION, CROSS SECTION] Images: [IMAGE007]
Last saved by: NUNESAL Time: 2/18/2020 9:23:27 AM
pw:\\cdmsmith-azo2-pw.bentley.com:PW_XM1\6103\234169 JEA PDB\04 Design Services NM_608\05 Process Mechanical\10 CADD\M011PSPS.dwg
©2020 CDM SMITH ALL RIGHTS RESERVED.
REUSE OF DOCUMENTS: THESE DOCUMENTS AND DESIGNS PROVIDED BY PROFESSIONAL SERVICE, INCORPORATED HEREIN, ARE THE PROPERTY OF CDM SMITH AND ARE NOT TO BE USED, IN WHOLE OR PART, FOR ANY OTHER PROJECT WITHOUT THE WRITTEN AUTHORIZATION OF CDM SMITH.

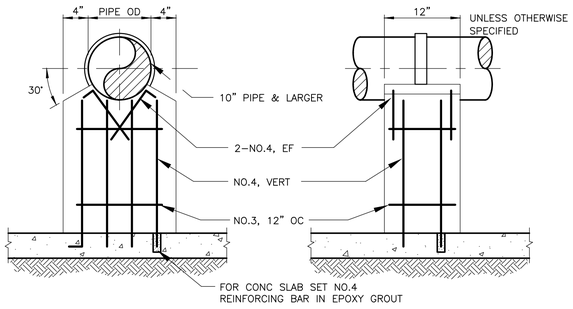


10" PIPE AND LARGER REACTION TYPE SUPPORT

DETAIL A
NTS

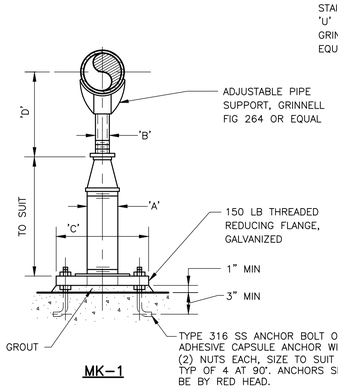


MK-1

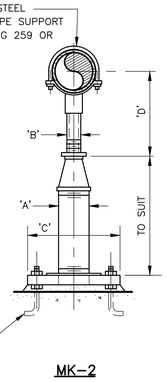


MK-2

ADJUSTABLE PIPE SUPPORT

DETAIL B
NTS

| ADJUSTABLE PIPE SUPPORT APPROX DIMENSIONS IN INCHES | | | | | |
|---|---|---|---|---|---|
| PIPE SIZE | A | B | C | D MIN | D MAX |
| 2 1/2 | 2 1/2 | 1 1/2 | 9 | 8 | 11 1/2 |
| 3 | 2 1/2 | 1 1/2 | 9 | 8 1/4 | 11 3/4 |
| 3 1/2 | 2 1/2 | 1 1/2 | 9 | 8 1/2 | 12 |
| 4 | 3 | 2 1/2 | 9 | 10 1/4 | 14 |
| 6 | 3 | 2 1/2 | 9 | 11 5/8 | 15 1/4 |
| 8 | 3 | 2 1/2 | 9 | 13 5/8 | 16 1/2 |
| 10 | 3 | 2 1/2 | 9 | 14 5/8 | 18 1/4 |
| 12 | 3 | 2 1/2 | 9 | 15 5/8 | 19 3/4 |
| 14 | 4 | 3 | 11 | 18 5/8 | 20 3/4 |
| 16 | 4 | 3 | 11 | 19 7/8 | 22 1/4 |
| 18 | 6 | 3 1/2 | 13 1/2 | 21 1/4 | 24 |
| 20 | 6 | 3 1/2 | 13 1/2 | 23 1/4 | 25 1/2 |
| 24 | 6 | 4 | 13 1/2 | 26 1/2 | 28 1/4 |
| 30 | 6 | 4 | 13 1/2 | 29 5/8 | 31 1/2 |
| 36 | 6 | 4 | 13 1/2 | 32 5/8 | 34 3/4 |

NOTE:
1. UNDER VALVES, METERS OR OTHER SPECIAL APPURTENANCES A FABRICATED SUPPORT PIECE MAY BE UTILIZED AS ACCEPTABLE TO ENGINEER

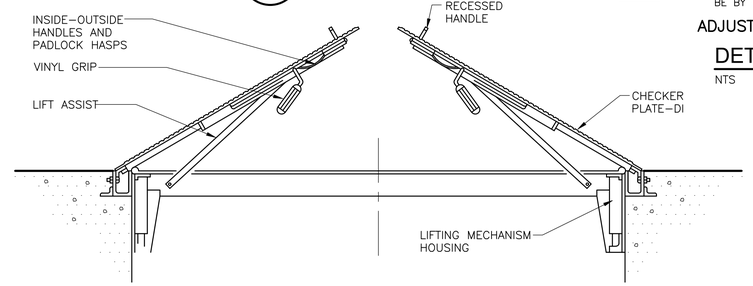


DOUBLE LEAF HATCH

DETAIL E
NTS

HATCH NOTES:
1. DUCTILE IRON HATCHES TO BE SUPPLIED WITH STAINLESS STEEL HARDWARE.
2. AASHTO M 306.
3. H-30 LOADING RATED.

NOTES:
1. ALL PIPES, VALVES AND FITTINGS ON AIR RELEASE VALVES AND PIPE SUPPORTS SHALL BE 316 SST.
2. COORDINATE EXACT SIZE OF FLANGE CONNECTION WITH AIR RELEASE VALVE SUPPLIER.
3. ROUTE DRAIN PIPING TO CONCRETE DRAIN BOX AS SHOWN ON C-3 AND M-4.

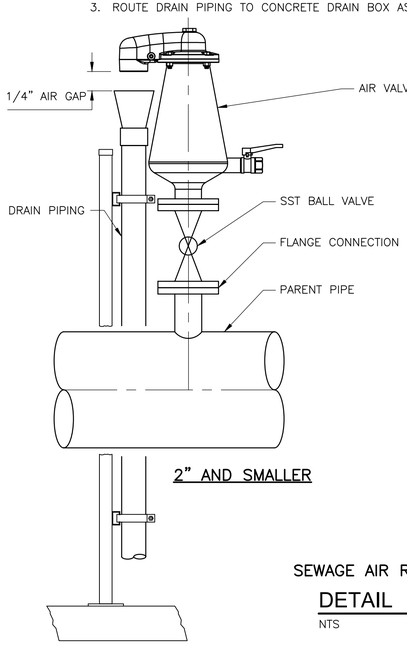


2" AND SMALLER

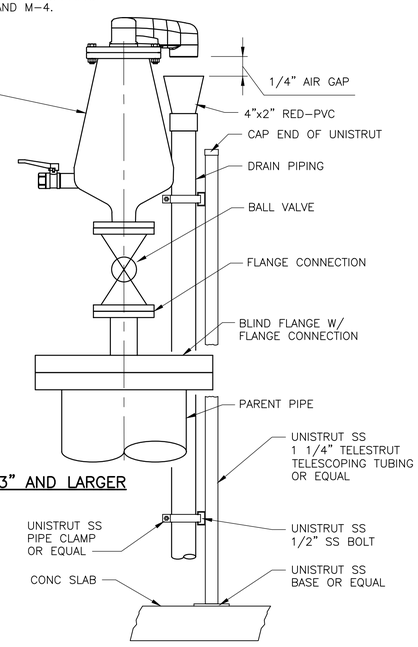


3" AND LARGER

SEWAGE AIR RELEASE VALVE

DETAIL F
NTS

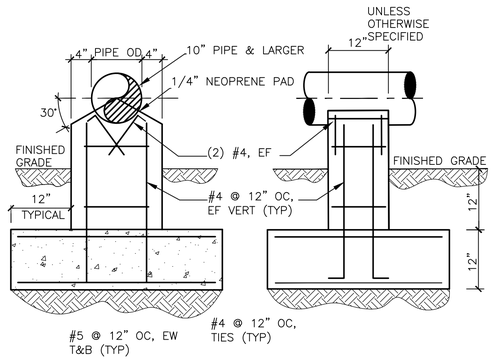


CONCRETE PIPE SUPPORT BELOW GRADE

DETAIL G
NTS M-4

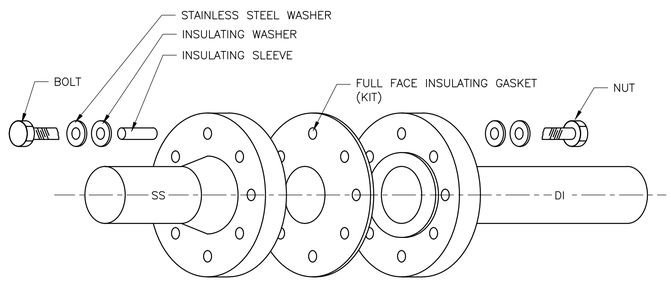


NOTE:
1. GASKET KIT SHALL PROVIDE COMPLETE CATHODIC PROTECTION OF BOTH FLANGE FACES. THE GASKET HAS SAME OUTSIDE DIAMETER OF FLANGES.
2. ALL HARDWARE TO BE STAINLESS STEEL.

TYPE E (FULL FACE GASKET)

DETAIL H
NTS M-2

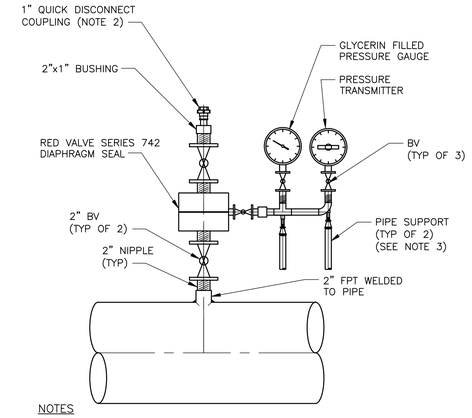


NOTES
1. ALL PIPING, FITTINGS AND VALVES SHALL BE 316 STAINLESS STEEL.
2. CONFIRM QUICK DISCONNECT COUPLING SIZE W/ OWNER.
3. SUPPORT INSTRUMENT PIPING FROM THE SLAB W/ STAINLESS STEEL UNISTRUT, MOUNT AND CLAMP.

DISCHARGE ANNULAR PRESSURE SENSOR ASSEMBLY

DETAIL C
NTS

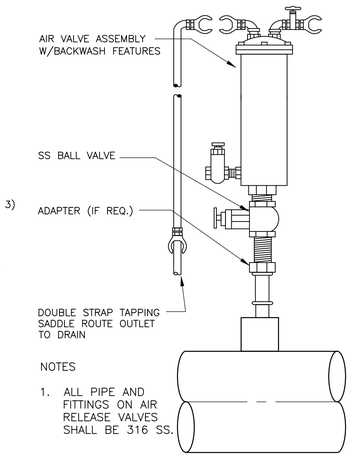


NOTES
1. ALL PIPE AND FITTINGS ON AIR RELEASE VALVES SHALL BE 316 SS.

AIR RELEASE VALVE

DETAIL D
NTS

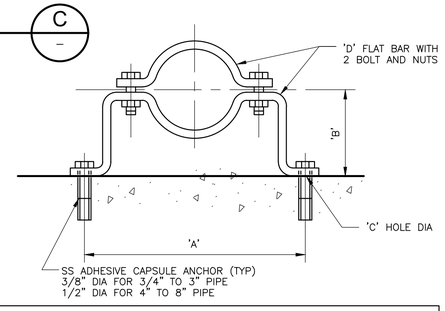


| DIMENSIONS IN INCHES | | | | | |
|---|---|---|---|---|---|
| PIPE DIA. | 'A' | 'B' SEE NOTE 3 BELOW | 'C' HOLE DIA. | 'D' FLAT BAR SIZE | LOAD RATING LBS.* |
| 3/4 | 5-15/16 | 2-1/2 | 7/16 | 3/16 X 1-1/4 | 300 |
| 1 | 6-1/4 | 2-5/8 | 7/16 | 3/16 X 1-1/4 | 300 |
| 1-1/4 | 6-11/16 | 2-3/4 | 7/16 | 3/16 X 1-1/4 | 300 |
| 1-1/2 | 6-15/16 | 3 | 7/16 | 3/16 X 1-1/4 | 300 |
| 2 | 8-5/16 | 3-3/16 | 7/16 | 1/4 X 1-1/4 | 500 |
| 2-1/2 | 8-7/8 | 3-7/16 | 7/16 | 1/4 X 1-1/4 | 500 |
| 3 | 9-1/8 | 3-3/4 | 7/16 | 1/4 X 1-1/4 | 500 |
| 3-1/2 | 10-1/16 | 4 | 7/16 | 1/4 X 1-1/4 | 500 |
| 4 | 10-9/16 | 4-1/4 | 9/16 | 1/4 X 1-1/2 | 600 |
| 5 | 11-3/4 | 4-3/4 | 9/16 | 1/4 X 1-1/2 | 600 |
| 6 | 14-3/8 | 5-5/16 | 9/16 | 3/8 X 1-1/2 | 850 |
| 8 | 16-5/8 | 6-5/16 | 9/16 | 3/8 X 1-1/2 | 850 |

* SAFETY FACTOR OF 5

NOTES:
1. PIPE CLAMP, WASHER AND SHIELD SHALL BE TYPE 316 STAINLESS STEEL.
2. WHEN USED WITH PVC OR FIBERGLASS PIPE. PROVIDE STEEL SHIELD AROUND PIPE AT CLAMP, WITH LOOSE FIT. WRAP COPPER TUBES WITH 2" STRIP OF RUBBER FABRIC.
3. FOR FLANGED PIPING INCREASE 'B' DIMENSION AS REQUIRED.

PIPE CLAMP FOR INDIVIDUAL PIPES

DETAIL J
NTS

| REV. NO. | DATE | DRWN | CHKD | REMARKS |
|---|---|---|---|---|

DESIGNED BY: X
DRAWN BY: A. NUNES
SHEET CHK'D BY: X
CROSS CHK'D BY: X
APPROVED BY: X
DATE: FEBRUARY 2020

CDM Smith
4651 Salisbury Road, Suite 420
Jacksonville, FL 32256
Tel: (904) 731-7109
FL COA No. EB-0000020

JEA

WILSON BLVD. (180-45) AND 118th ST. (180-47)
MASTER PUMP STATION IMPROVEMENTS

STANDARD DETAILS

DATE:
JONATHAN Z GOLDMAN
PE NO. 0048925

PROJECT NO. 6103-234169
FILE NAME: MD01DETL.DWG

SHEET NO.
MD-1

60% SUBMITTAL - NOT FOR CONSTRUCTION

XREFs: [CDMS_2234] Images: []
Last saved by: NUNESAL Time: 2/17/2020 5:10:57 PM
pw:\\cdmsmith-a202-pw.bentley.com:PW_XM1\6103\234169 JEA PDB\04 Design Services NM_60%\05 Process Mechanical\10 CAD\MD01DETL.DWG
©2020 CDM SMITH ALL RIGHTS RESERVED.
REUSE OF DOCUMENTS: THESE DOCUMENTS AND DESIGNS PROVIDED BY PROFESSIONAL SERVICE, INCORPORATED HEREIN, ARE THE PROPERTY OF CDM SMITH AND ARE NOT TO BE USED, IN WHOLE OR PART, FOR ANY OTHER PROJECT WITHOUT THE WRITTEN AUTHORIZATION OF CDM SMITH.

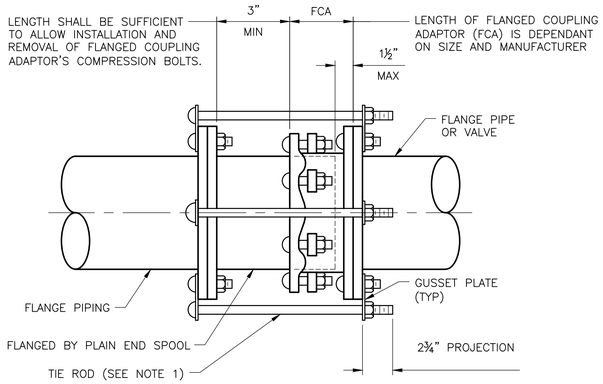


HARNESSED FLANGED ADAPTER COUPLING (HFAC)

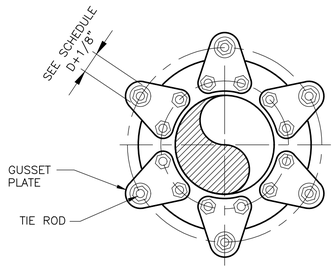


SECTION

NOTES:

1. PROVIDE NUMBER OF TIE RODS PER SCHEDULE. EVENLY SPACE INSTALLATION OF THE TIE RODS. LENGTH OF TIE RODS TO BE DETERMINED BY CONTRACTOR BASED ON SIZE AND FLANGED COUPLING ADAPTOR AND FINAL LENGTH OF SPOOL PIECE.
2. TIE ROD SCHEDULE IS VALID FOR PRESSURES UP TO 150 PSI. FOR PRESSURES OVER 150 PSI SEE AWWA MANUAL 11.
3. PROVIDE GUSSET PLATES FOR ATTACHMENT OF TIE RODS. FOR SIZE SEE TABLE.
4. MATERIALS – HARNESS RODS: 316 STAINLESS STEEL.
   STRETCHER PLATE: 316 STAINLESS STEEL.
   FLANGED ADAPTOR COUPLING: 316 STAINLESS STEEL.
5. WRAP ALL COUPLING BURIED BELOW GRADE IN PROTECTIVE TAPE.

| TIE ROD SCHEDULE FOR HARNESSED JOINTS | | | |
|---|---|---|---|
| PIPE DIAMETER (IN) | TIE ROD DIAMETER (D) (IN) | NUMBER OF TIE RODS | GUSSET PLATE THICKNESS (IN) |
| 6 | 5/8 | 2 | 3/8 |
| 8 | 5/8 | 2 | 3/8 |
| 10 | 5/8 | 2 | 3/8 |
| 12 | 3/4 | 2 | 3/8 |
| 14 | 3/4 | 2 | 3/8 |
| 16 | 7/8 | 2 | 1/2 |
| 18 | 1 | 2 | 1/2 |
| 20 | 1 | 2 | 1/2 |
| 24 | 1–1/8 | 4 | 1/2 |
| 30 | 1–1/8 | 4 | 1/2 |
| 36 | 1–1/4 | 4 | 5/8 |
| 42 | 1–1/2 | 4 | 3/4 |
| 48 | 1–5/8 | 4 | 3/4 |
| 54 | 1–5/8 | 6 | 3/4 |

HARNESSED FLANGE ADAPTER COUPLING (HFAC)
DETAIL A
NTS

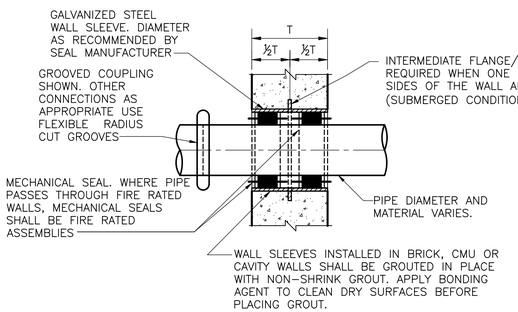


NOTE:
INSULATED PIPING:
INTERRUPT INSULATION AT BOTH SIDES OF WALL.
INSTALL INSULATION FLUSH WITH WALL AFTER WATER TIGHT INSTALLATION OF MECHANICAL SEAL.

WALL SLEEVE WITH MECHANICAL SEAL FOR CONCRETE, BRICK CMU OR CAVITY WALLS
DETAIL F
NTS

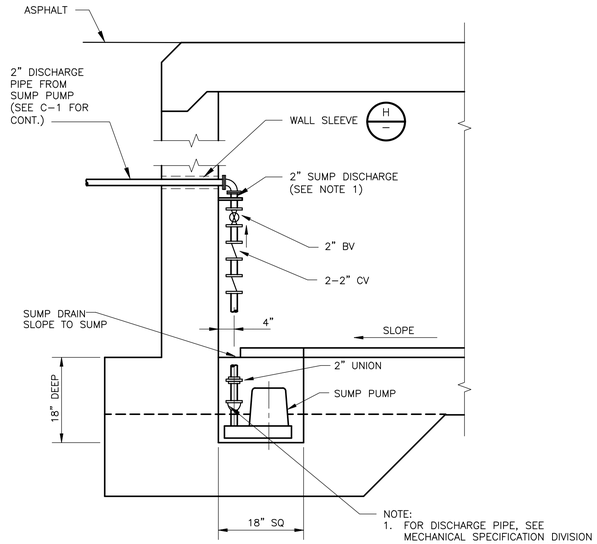


NOTE:
1. FOR DISCHARGE PIPE, SEE MECHANICAL SPECIFICATION DIVISION 15 FOR PIPING REQUIREMENTS. SUMP PUMP SHALL BE GRUNDFOS UNILIFT KP 350 MODEL, 115VAC/60HZ/1PHASE/½HP OR EQUAL WITH FLOAT SWITCH AND ASSOCIATED CONTROLS WITH 25FT CABLE.
2. PUMP SHALL BE PENTAIR–MYERS.

SUMP PUMP ELEVATION
DETAIL D
NTS

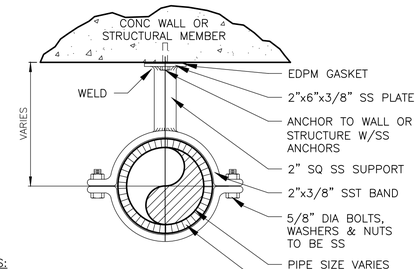


NOTES:

1. USE WASHERS WITH NUTS AND BOLTS.
2. ALL ANCHORS, FASTENERS, BOLTS, NUTS, WASHERS, SCREWS, ETC. SHALL BE 316 STAINLESS STEEL. DETAILS SHOWN ARE INTENDED TO COVER A WIDE.
3. RANGE OF PROJECT SITUATIONS. ALL DETAILS MAY NOT APPLY TO THIS PROJECT.

OVERHEAD PIPE SUPPORT
DETAIL E
NTS

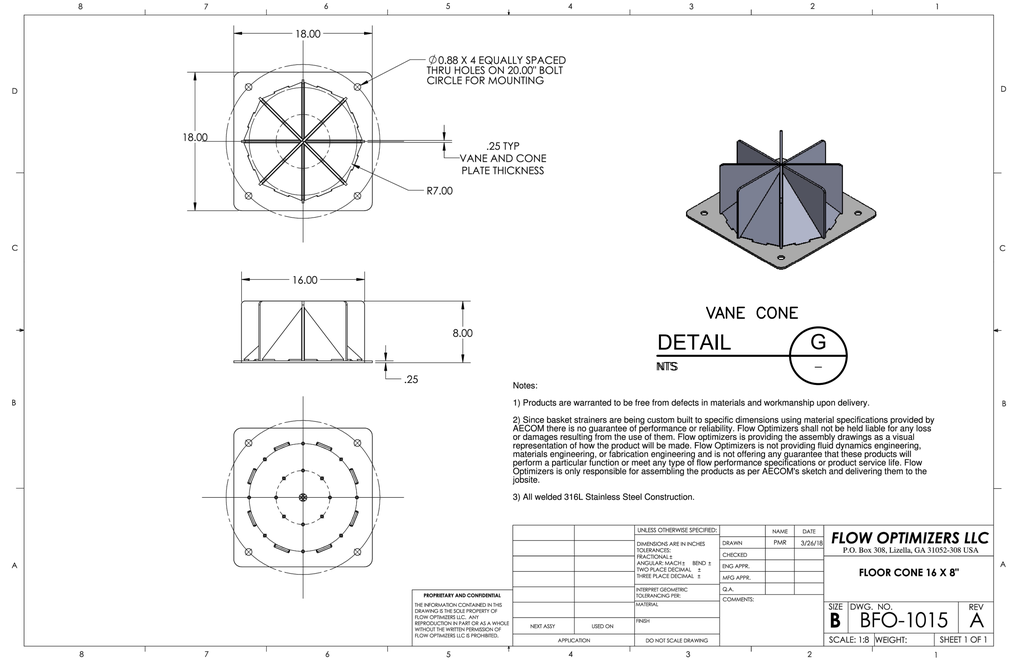




VANE CONE
DETAIL G
NTS

Notes:

1) Products are warranted to be free from defects in materials and workmanship upon delivery.

2) Since basket strainers are being custom built to specific dimensions using material specifications provided by AECOM there is no guarantee of performance or reliability. Flow Optimizers shall not be held liable for any loss or damages resulting from the use of them. Flow optimizers is providing the assembly drawings as a visual representation of how the product will be made. Flow Optimizers is not providing fluid dynamics engineering, materials engineering, or fabrication engineering and is not offering any guarantee that these products will perform a particular function or meet any type of flow performance specifications or product service life. Flow Optimizers is only responsible for assembling the products as per AECOM's sketch and delivering them to the jobsite.

3) All welded 316L Stainless Steel Construction.

PROPRIETARY AND CONFIDENTIAL
THE INFORMATION CONTAINED IN THIS DRAWING IS THE SOLE PROPERTY OF FLOW OPTIMIZERS LLC. ANY REPRODUCTION IN PART OR AS A WHOLE WITHOUT THE WRITTEN PERMISSION OF FLOW OPTIMIZERS LLC IS PROHIBITED.

UNLESS OTHERWISE SPECIFIED:
DIMENSIONS ARE IN INCHES
TOLERANCES:
FRACTIONALS ±
ANGULAR: MACH ± BEND ±
TWO PLACE DECIMAL ±
THREE PLACE DECIMAL ±
INTERPRET GEOMETRIC TOLERANCING PER:
MATERIAL
FINISH
NEXT ASSY | USED ON
APPLICATION | DO NOT SCALE DRAWING

| | NAME | DATE |
|---|---|---|
| DRAWN | PAR | 3/26/18 |
| CHECKED | | |
| ENG APPR. | | |
| MFG APPR. | | |
| Q.A. | | |
| COMMENTS: | | |

**FLOW OPTIMIZERS LLC**
P.O. Box 308, Lizella, GA 31052-308 USA

FLOOR CONE 16 X 8"

| SIZE | DWG. NO. | REV |
|---|---|---|
| B | BFO-1015 | A |
| SCALE: 1:8 | WEIGHT: | SHEET 1 OF 1 |

| REV. NO. | DATE | DRWN | CHKD | REMARKS |
|---|---|---|---|---|

DESIGNED BY: X
DRAWN BY: A. NUNES
SHEET CHK'D BY: X
CROSS CHK'D BY: X
APPROVED BY: X
DATE: FEBRUARY 2020

CDM Smith
4651 Salisbury Road, Suite 420
Jacksonville, FL 32256
Tel: (904) 731-7109
FL COA No. EB-0000020

JEA

WILSON BLVD. (180-45) AND 118th ST. (180-47)
MASTER PUMP STATION IMPROVEMENTS

STANDARD DETAILS

DATE:
JONATHAN Z GOLDMAN
PE NO. 0048925

PROJECT NO. 6103–234169
FILE NAME: MD02DETL.DWG

SHEET NO.
MD-2

60% SUBMITTAL - NOT FOR CONSTRUCTION

XREFs: [CDMS_2234] Images: []
Last saved by: NUNESAL Time: 2/17/2020 5:11:47 PM
pw:\\cdmsmith-azo2-pw.bentley.com:PW_XM1\6103\234169 JEA PDB\04 Design Services NM_608\05 Process Mechanical\10 CADD\MD02DETL.DWG
©2020 CDM SMITH ALL RIGHTS RESERVED.
REUSE OF DOCUMENTS: THESE DOCUMENTS AND DESIGNS PROVIDED BY PROFESSIONAL SERVICE, INCORPORATED HEREIN, ARE THE PROPERTY OF CDM SMITH AND ARE NOT TO BE USED, IN WHOLE OR PART, FOR ANY OTHER PROJECT WITHOUT THE WRITTEN AUTHORIZATION OF CDM SMITH.

## NOTES:

1. These details are for construction field expediency to resolve utility conflicts that cannot be remedied by relocation. For conflicts determined during design, use the construction shop drawings for structure details.
2. Concrete used in conflict structures shall be as specified in ASTM C478. 4000 psi may be used in lieu of Class I concrete.
3. Maximum opening for pipe shall be the pipe OD plus 6". Mortar used to seal the pipe into the opening will be of such mix that shrinkage will not cause leakage into or out of the structure.
4. If the conflict structure is round or there are multiple inlet or outlet pipes, then the wall section should be reviewed for strength.
5. If during construction or the plans design process it is determined that a potable water supply line must pass though a storm drain structure, it must be in compliance with Chapter 62-555.314 (3) F.A.C. and shown on the design or construction plans and submitted to the Florida Department of Environmental Protection (FDEP) Administrator For Drinking Water in the respective FDEP District for review and comment. This index and rule citation provide accepted methods for addressing conflicts when and where they cannot be reasonably avoided. To be submitted along with the plans shall be a justification describing inordinate cost and the impracticality of avoidance. If identified, properly justified, and accomplished in accordance with this index, approval is granted. Upon request, the Utility Agency Owner (UAO) must provide support data on the cost of relocation or adjustment to the FDOT for submittal to the FDEP. See the following web site for District FDEP Drinking Water Contacts: www.dep.state.fl.us/water/drinkingwater/index.htm and click on "Organization" on the menu to the right.

## DESIGNER'S NOTES:

"Sumped" conflict manholes shall not be used unless the system is hydraulically designed to account for the headloss generated if the sump is completley blocked

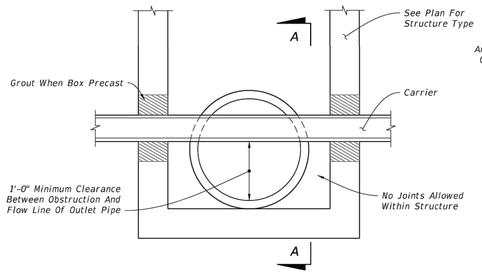


SECTION LONGITUDINAL TO CARRIER PIPE

### UTILITY CONFLICT CONDITION I

(Nonpresure Or Nonfluid Carrier Installations)

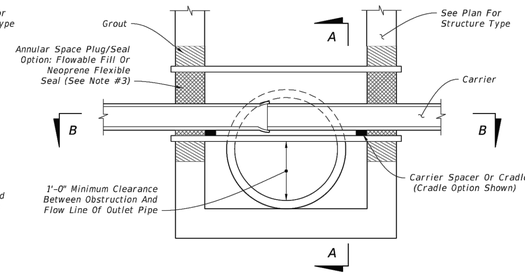


SECTION LONGITUDINAL TO CARRIER PIPE

### UTILITY CONFLICT CONDITION II

(Presure Or Fluid Carrier Installations)

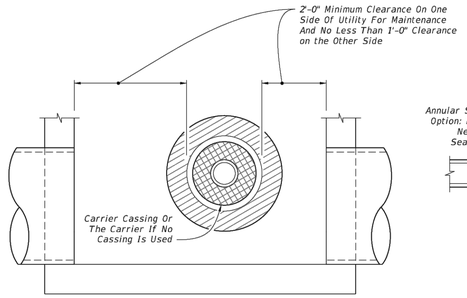


SECTION A-A

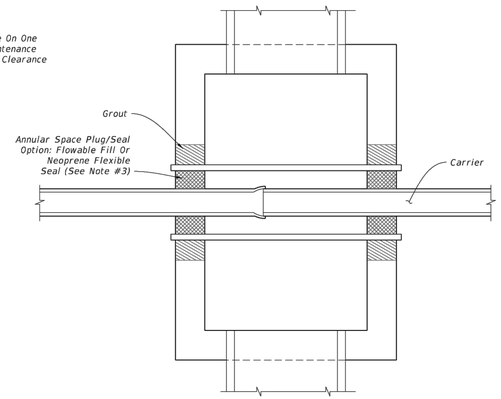


SECTION B-B

UTILITY CONFLICT PIPES THRU STORM DRAIN STRUCTURES

| LAST REVISION | DESCRIPTION: | FDOT | FY 2018-19 STANDARD PLANS | UTILITY CONFLICTS THRU DRAINAGE STRUCTURES | INDEX | SHEET |
|---|---|---|---|---|---|---|
| 11/01/17 | REVISION | | | | 425-080 | 1 of 1 |

UTILITY CONFLICT BOX

DETAIL A (C-3)

NTS

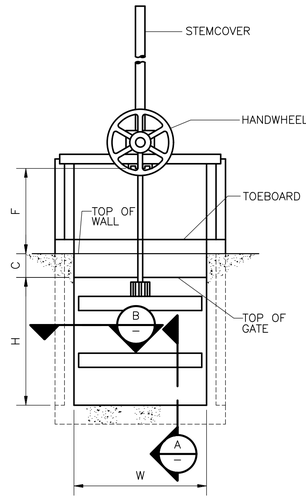


ELEVATION

EMBEDDED SS SLIDE GATE ELEVATION

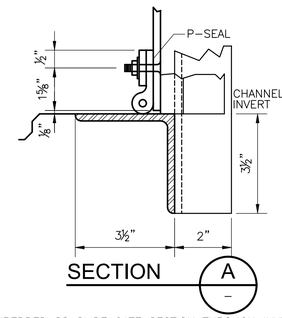


SECTION A

EMBEDDED SS SLIDE GATE SECTION THROUGH INVERT

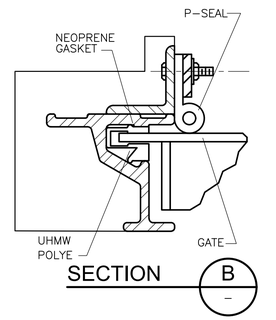


SECTION B

EMBEDDED SS SLIDE GATE SECTION THROUGH GUIDE

EMBEDDED SS SLIDE GATE DETAIL B (NTS)

| REV. NO. | DATE | DRWN | CHKD | REMARKS |
|---|---|---|---|---|

DESIGNED BY: X
DRAWN BY: A. NUNES
SHEET CHK'D BY: X
CROSS CHK'D BY: X
APPROVED BY: X
DATE: FEBRUARY 2020


CDM Smith
4651 Salisbury Road, Suite 420
Jacksonville, FL 32256
Tel: (904) 731-7109
FL COA No. EB-0000020


JEA

WILSON BLVD. (180-45) AND 118th ST. (180-47)
MASTER PUMP STATION IMPROVEMENTS

STANDARD DETAILS

DATE:
JONATHAN Z GOLDMAN
PE NO. 0048925

PROJECT NO. 6103-234169
FILE NAME: MD03DETL.DWG

SHEET NO.
MD-3

60% SUBMITTAL - NOT FOR CONSTRUCTION


XREFs: [CDMS_2234_DetailBorder] Images: []
Last saved by: NUNESAL Time: 2/17/2020 5:09:35 PM
pw:\\cdmsmith-az02-pw.bentley.com:PW_AM1\6103\234169 JEA PDB\04 Design Services NM_60%\05 Process Mechanical\10 CADD\MD03DETL.dwg
10/23/2017 10:27:32 AM
10/23/2017
© 2020 CDM SMITH ALL RIGHTS RESERVED.
REUSE OF DOCUMENTS: THESE DOCUMENTS AND DESIGNS PROVIDED BY PROFESSIONAL SERVICE, INCORPORATED HEREIN, ARE THE PROPERTY OF CDM SMITH AND ARE NOT TO BE USED, IN WHOLE OR PART, FOR ANY OTHER PROJECT WITHOUT THE WRITTEN AUTHORIZATION OF CDM SMITH.

## HVAC SYMBOLS

| | |
|---|---|
| T | THERMOSTAT |
| HT | HIGH TEMPERATURE SWITCH |
| LT | LOW TEMPERATURE SWITCH |
| SD | SMOKE DETECTOR |
| FS | FLOW SENSOR |
| H | HUMIDISTAT |
| MS | MOTION SENSOR |
| WT | WALL TIMER |
| BG | BREAK GLASS SWITCH |
| WS | WALL SWITCH |
| M | MOTOR OPERATED DAMPER |
| | EXTERIOR ALARM STATION |
| | INTERIOR ALARM STATION |
| CD | CONTROL DAMPER |
| FD | FIRE DAMPER |
| SD | SMOKE ACTUATED FIRE DAMPER |
| FC | FLEXIBLE CONNECTION |
| | ELBOW WITH TURNING VANES |
| EG | EXHAUST GRILLE |
| ER | EXHAUST REGISTER |
| RG | RETURN GRILLE |

NOTE:

1. SYMBOLS AND ABBREVIATIONS SHOWN ON THE SHEET ARE GENERIC AND MAY NOT HAVE BEEN USED ON THE PROJECT.

## HVAC SYMBOLS

| | |
|---|---|
| SR | SUPPLY REGISTER |
| | SUPPLY DUCT |
| | RETURN/EXHAUST DUCT |
| DG | DOOR GRILLE |
| TG | TRANSFER GRILLE |
| RG | TRANFER DUCT |
| | SHOE-TAP |
| | DAMPER-EXTRACTOR DUCT CONNECTION |
| | CEILING DIFFUSER - TYPE VARIES |
| EF | ROOF MOUNTED EXHAUST FAN |
| EF | WALL MOUNTED EXHAUST FAN |
| VAV | VARIABLE AIR VOLUME REGULATOR W/ OUTLETS |
| | ROUND FLEXIBLE INSULATED DUCT |
| | SHEET METAL DUCT |
| EUH | ELECTRIC UNIT HEATER |
| EDH | ELECTRIC DUCT HEATER |
| ERU | ENERGY RECOVERY UNIT |
| WT | WT BOX WITH TRANSITION |

## HVAC ABBREVIATIONS

| | |
|---|---|
| A | AIR |
| AABC | ASSOCIATED AIR BALANCE COUNCIL |
| ACCU | AIR COOLED CONDENSING UNIT |
| AD | ACCESS DOOR |
| AFF | ABOVE FINISHED FLOOR |
| AHU | AIR HANDLING UNIT |
| AL | ALUMINUM |
| APU | AIR PURIFICATION UNIT |
| AR | ACID RESISTING |
| ASHRAE | AMERICAN SOCIETY OF HEATING, REFRIGERATING, AND AIR-CONDITIONING ENGINEERS |
| ASME | AMERICAN SOCIETY OF MECHANICAL ENGINEERS |
| ATC | AUTOMATIC TEMPERATURE CONTROL |
| BDD | BACKDRAFT DAMPER |
| BEL | BELOW |
| BLDG | BUILDING |
| BS | BIRD SCREEN |
| BTU | BRITISH THERMAL UNITS |
| C | CONDENSATE |
| CD | CONTROL DAMPER |
| CENT | CENTRIFUGAL |
| CFM | CUBIC FEET PER MINUTE |
| CLG | CEILING |
| CONC | CONCRETE |
| CONN | CONNECTION |
| CW | CHILLED WATER |
| CWR | CHILLED WATER RETURN |
| CWS | CHILLED WATER SUPPLY |
| DB | DRY BULB |
| DG | DOOR GRILLE |
| DHU | DEHUMIDIFICATION UNIT |
| DIA | DIAMETER |
| DISC | DISCHARGE |
| DN | DOWN |
| DOAS | DEDICATED OUTSIDE AIR SYSTEM |
| DPR | DAMPER |
| DS | DISCONNECT SWITCH |
| EA | EACH |
| EDH | ELECTRIC DUCT HEATER |
| EER | ENERGY EFFICIENCY RATION |
| EF | EXHAUST FAN |
| EG | EXHAUST GRILLE |
| ER | EXHAUST REGISTER |
| ERU | ENERGY RECOVERY UNIT |
| ESP | EXTERNAL STATIC PRESSURE |
| EUH | ELECTRIC UNIT HEATER |
| EVAP | EVAPORATOR |
| FC | FLEXIBLE CONNECTION |
| FD | FIRE DAMPER |
| FIN | FINISH |
| FL | FLOOR |
| FLA | FULL LOAD AMPS |
| FRP | FIBERGLASS REINFORCED PLASTIC |
| FT | FEET |
| FT² | SQUARE FEET |
| GA | GAUGE |
| GALV/GS | GALVANIZED |
| GFC | GAS FIRED CHILLER |
| GPH | GALLONS PER HOUR |
| GPM | GALLONS PER MINUTE |
| HG | HOT GAS |
| HP | HORSEPOWER |
| HR | HOUR |

## HVAC ABBREVIATIONS

| | |
|---|---|
| HW | HOT WATER |
| KW | KILOWATT |
| LD | LINEAR DIFFUSER |
| LIQ | LIQUID |
| LVR | LOUVER |
| MAU | MAKE-UP AIR UNIT |
| MBH | THOUSANDS OF BRITISH THERMAL UNITS PER HOUR |
| MCA | MAXIMUM CURRENT AMPS |
| MCC | MOTOR CONTROL CENTER |
| MFR | MANUFACTURER |
| MOD | MOTOR OPERATED DAMPER |
| MS | MOTION SENSOR |
| MTD | MOUNTED |
| MTG | MOUNTING |
| NOM | NOMINAL |
| NTS | NOT TO SCALE |
| O/A | OUTSIDE AIR |
| OBD | OPPOSED BLADE DAMPER |
| OSA | OUTSIDE AIR |
| PAC | PACKAGED AIR CONDITIONING UNIT |
| PBD | PARALLEL BLADE DAMPER |
| PCD | PERFORATED CEILING DIFFUSER |
| PCF | POUNDS PER CUBIC FOOT |
| PPM | PARTS PER MILLION |
| PROP | PROPELLER |
| PSI | POUNDS PER SQUARE INCH |
| PVC | POLYVINYL CHLORIDE |
| R | REFRIGERANT |
| R/A | RETURN AIR |
| RG | RETURN GRILLE |
| RM | ROOM |
| RPM | REVOLUTIONS PER MINUTE |
| S/A | SUPPLY AIR |
| SAD | SUPPLY AIR DIFFUSER |
| SD | SMOKE DETECTOR |
| SEER | SEASONAL ENERGY EFFICIENCY RATIO |
| SHT | SHEET |
| SM | SHEET METAL |
| SMACNA | SHEET METAL AND AIR CONDITIONING CONTRACTORS NATIONAL ASSOCIATION |
| SP | STATIC PRESSURE |
| SR | SUPPLY REGISTER |
| SS | STAINLESS STEEL |
| ST | STEAM |
| STD | STANDARD |
| SUCT | SUCTION |
| SW | SWITCH |
| TDH | TOTAL DISCHARGE HEAD |
| TEMP | TEMPERATURE |
| TG | TRANSFER GRILLE |
| TSP | TOTAL STATIC PRESSURE |
| TV | TURNING VANES |
| TYP | TYPICAL |
| UH | UNIT HEATER |
| UL | UNDERWRITERS LABORATORY |
| VAP | VAPOR |
| VRF | VARIABLE REFRIGERANT FLOW |
| VVT | VARIABLE VOLUME TERMINAL |
| W/ | WITH |
| WB | WET BULB |
| WG | WATER GAUGE |
| WT | AS IN WT BOX |
| WTR | WATER |

## HVAC NOTES

1. HVAC EQUIPMENT DIMENSIONS, LOCATIONS, DUCTWORK AND PIPING SYSTEM LAYOUTS ARE BASED ON EQUIPMENT SELECTED BY THE ENGINEER. IF THE CONTRACTOR PROPOSES TO FURNISH EQUIPMENT THAT REQUIRES AN ARRANGEMENT OR SPACE DIFFERING FROM THAT INDICATED ON THE DRAWINGS, OR SPECIFIED, THE CONTRACTOR SHALL PREPARE AND SUBMIT TO THE ENGINEER, FOR APPROVAL, DETAILED ARCHITECTURAL, STRUCTURAL, MECHANICAL, PLUMBING, INSTRUMENTATION, HVAC AND ELECTRICAL DRAWINGS AND EQUIPMENT LISTS SHOWING ALL NECESSARY CHANGES AND EMBODYING ALL FEATURES OF THE EQUIPMENT THE CONTRACTOR PROPOSES TO FURNISH. THIS INFORMATION SHALL INCLUDE BUT SHALL NOT BE LIMITED TO PLANS, SECTIONS, DETAILS, AND SCHEMATICS OF ALL APPURTENANCES REQUIRED. SUCH CHANGES, IF APPROVED BY THE ENGINEER, SHALL BE AT NO EXTRA COST TO THE OWNER. THE CONTRACTOR SHALL ASSUME THE COST OF, AND THE RESPONSIBILITY FOR, SATISFACTORILY ACCOMPLISHING ALL THE NECESSARY CHANGES CORRESPONDING TO THE DIMENSIONS AND CHARACTERISTICS OF THE EQUIPMENT SUBMITTED AND APPROVED BY THE ENGINEER. REFER TO SPECIFICATIONS FOR FURTHER DETAILS.
2. SIZES OF EQUIPMENT PADS INDICATED ON THE DRAWINGS ARE APPROXIMATE. EXACT DIMENSIONS SHALL BE DETERMINED BY THE CONTRACTOR FOR THE EQUIPMENT FURNISHED. ALL FLOOR MOUNTED EQUIPMENT SHALL BE SET ON CONCRETE PADS CONFORMING TO DETAILS SHOWN ON THE STRUCTURAL DRAWINGS.
3. DIELECTRIC COUPLINGS, FLANGES OR UNIONS SHALL BE INSTALLED AT ALL CONNECTIONS OF COPPER PIPE TO OTHER TYPES OF METALLIC PIPING.
4. HVAC PIPING AND DUCTWORK DRAWINGS DO NOT SHOW ALL DRAINS, VENTS, OFFSETS AND FITTINGS ETC. REQUIRED FOR THE COMPLETE SYSTEM. SMALL PIPING IS SHOWN APPROXIMATELY TO SCALE BUT NOT EVERY FITTING AND OFFSET IS SHOWN. SOME VALVES AND APPURTENANCES MAY BE OMITTED FOR THE SAKE OF CLARITY. THE CONTRACTOR SHALL FURNISH, INSTALL AND TEST ALL HVAC SYSTEMS SHOWN ON THE DRAWINGS AND DETAILS, AND/OR AS DEFINED IN THE SPECIFICATIONS TO PROVIDE THE COMPLETE SYSTEM.
5. UNLESS OTHERWISE SHOWN ON THE DRAWING, ALL WALL PENETRATIONS SHALL BE AS SHOWN ON THE WALL PENETRATION DETAILS. ABOVE GROUND EXTERIOR WALL AND ROOF PENETRATIONS SHALL BE AS SHOWN ON THE ARCHITECTURAL DRAWINGS. IF APPROVED BY THE ENGINEER, THE CONTRACTOR MAY SUBSTITUTE ALTERNATE METHODS PROVIDING THEY MEET INTENDED DESIGN REQUIREMENTS.
6. NOT ALL AND ONLY CERTAIN TYPES OF SUPPORTS ARE SHOWN ON THE HVAC DRAWINGS. UNLESS OTHERWISE DETAILED ON THE DRAWINGS ALL PIPE AND DUCT SUPPORTS SHALL BE DESIGNED, FURNISHED AND INSTALLED BY THE CONTRACTOR AS SPECIFIED AND TO THE APPROVAL OF THE ENGINEER.
7. FOR ALL ROOF MOUNTED EQUIPMENT, MAINTAIN A MINIMUM OF 10'-0" CLEARANCE FROM ANY ROOF EDGE UNLESS GUARDRAILS HAVE BEEN PROVIDED.
8. UNLESS OTHERWISE NOTED, MOUNT ALL DUCTWORK AND PIPING TIGHT TO STRUCTURE. MAINTAIN A MINIMUM 7'-6" CLEAR HEIGHT BELOW DUCTWORK, INCLUDING SUPPORTS. COORDINATE INSTALLATION OF DUCTWORK WITH ALL OTHER NEW AND EXISTING EQUIPMENT, PIPING, CONDUIT, ETC.
9. SEE ELECTRICAL DRAWINGS FOR AREA ELECTRICAL/CODE RATING. ALL HVAC EQUIPMENT SHALL COMPLY WITH THE REQUIREMENTS OF THOSE AREA CLASSIFICATIONS.

DATE:
JOSHUA H. MEINIG
PE NO. 72454

© 2019 CDM SMITH ALL RIGHTS RESERVED.
REUSE OF DOCUMENTS: THESE DOCUMENTS AND DESIGNS PROVIDED BY PROFESSIONAL SERVICE, INCORPORATED HEREIN, ARE THE PROPERTY OF CDM SMITH AND ARE NOT TO BE USER, IN WHOLE OR PART, FOR ANY OTHER PROJECT WITHOUT THE WRITTEN AUTHORIZATION OF CDM SMITH.

| REV. NO. | DATE | DRWN | CHKD | REMARKS |
|---|---|---|---|---|
| | | | | |

DESIGNED BY: J. MEINIG
DRAWN BY: A. STUART
SHEET CHK'D BY: P. POULIOT
CROSS CHK'D BY: J. GOLDMAN
APPROVED BY: J. MEINIG
DATE: FEBRUARY 2020

CDM Smith
4651 Salisbury Road, Suite 420
Jacksonville, FL 32256
Tel: (904) 731-7109
FL COA No. EB-0000020

JEA

WILSON BLVD. (180-45) AND 118th ST. (180-47)
MASTER PUMP STATION IMPROVEMENTS

HVAC SYMBOLS AND ABBREVIATIONS

PROJECT NO. 6103-234169
FILE NAME: HWZ002PS.RVT

SHEET NO.
H-1

60% SUBMITTAL - NOT FOR CONSTRUCTION

© 2019 CDM SMITH ALL RIGHTS RESERVED.
REUSE OF DOCUMENTS: THESE DOCUMENTS AND DESIGNS PROVIDED BY PROFESSIONAL SERVICE, INCORPORATED HEREIN, ARE THE PROPERTY OF CDM SMITH AND ARE NOT TO BE USER, IN WHOLE OR PART, FOR ANY OTHER PROJECT WITHOUT THE WRITTEN AUTHORIZATION OF CDM SMITH.

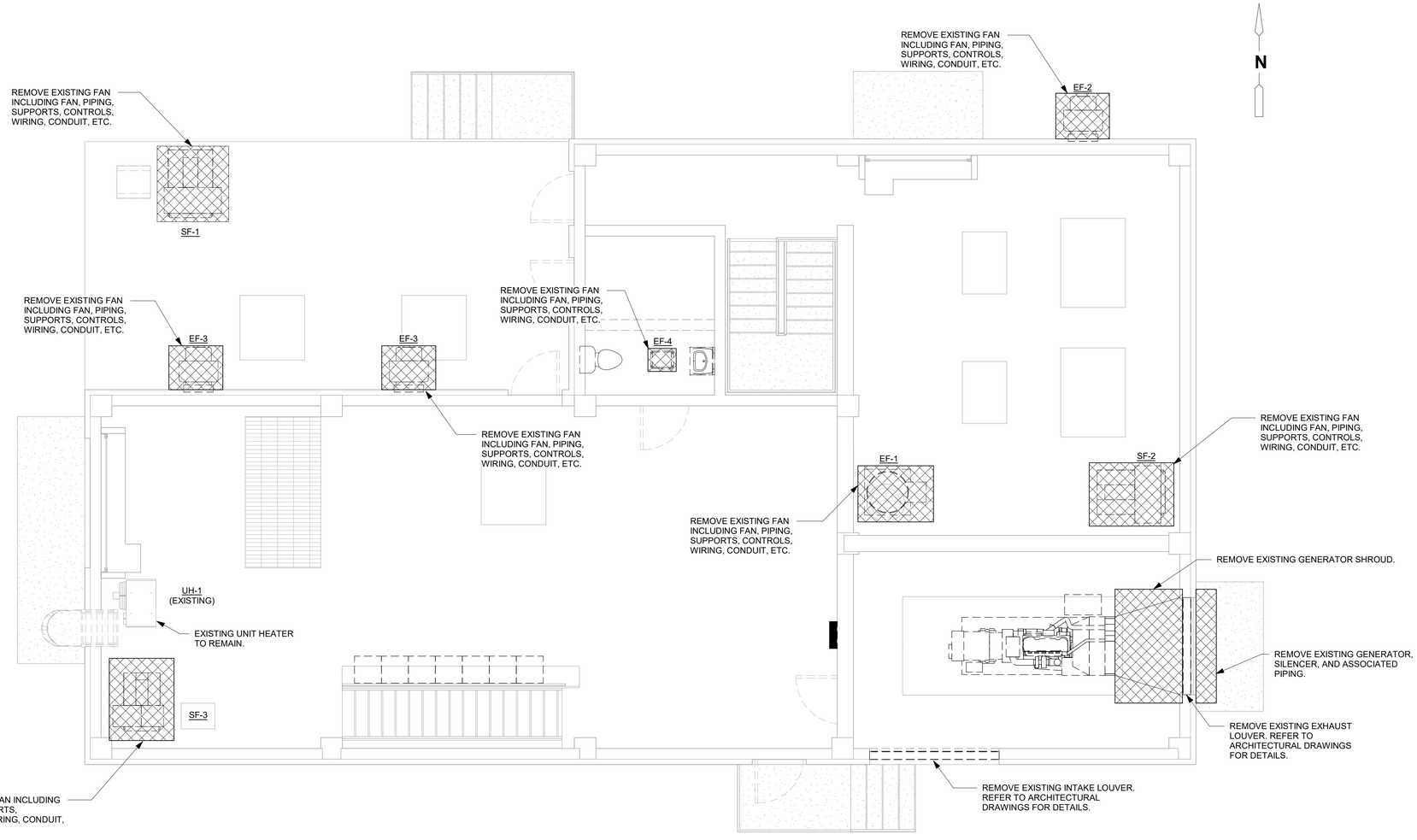


DEMOLITION NOTES:

1. COORDINATE DEMOLITION AND DISPOSAL WITH THE REQUIREMENTS OF THE SPECIFICATIONS AND THE OWNER.
2. CONTRACTOR SHALL FIELD VERIFY LOCATIONS, DIMENSIONS, AND CONFIGURATION OF ALL EXISTING EQUIPMENT, DUCTWORK, HANGERS, SUPPORTS, ANCHORS, CONTROLS, ETC.
3. SEE ARCHITECTURAL, STRUCTURAL, PLUMBING, PROCESS MECHANICAL, AND ELECTRICAL DRAWINGS FOR ADDITIONAL DEMOLITION IN THESE AREAS.

## WILSON UPPER LEVEL HVAC DEMOLITION PLAN

1/4" = 1'-0"

DATE:
JOSHUA H. MEINIG
PE NO. 72454

| REV. NO. | DATE | DRWN | CHKD | REMARKS |
|---|---|---|---|---|
| | | | | |

DESIGNED BY: J. MEINIG
DRAWN BY: A. STUART
SHEET CHK'D BY: P. POULIOT
CROSS CHK'D BY: J. GOLDMAN
APPROVED BY: J. MEINIG
DATE: FEBRUARY 2020

CDM Smith
4651 Salisbury Road, Suite 420
Jacksonville, FL 32256
Tel: (904) 731-7109
FL COA No. EB-0000020

JEA

WILSON BLVD. (180-45) AND 118th ST. (180-47)
MASTER PUMP STATION IMPROVEMENTS

WILSON BLVD.
UPPER LEVEL HVAC DEMOLITION PLAN

PROJECT NO. 6103-234169
FILE NAME: HWZ002PS.RVT

SHEET NO.
H-2

60% SUBMITTAL - NOT FOR CONSTRUCTION

© 2019 CDM SMITH ALL RIGHTS RESERVED.
REUSE OF DOCUMENTS: THESE DOCUMENTS AND DESIGNS PROVIDED BY PROFESSIONAL SERVICE, INCORPORATED HEREIN, ARE THE PROPERTY OF CDM SMITH AND ARE NOT TO BE USER, IN WHOLE OR PART, FOR ANY OTHER PROJECT WITHOUT THE WRITTEN AUTHORIZATION OF CDM SMITH.

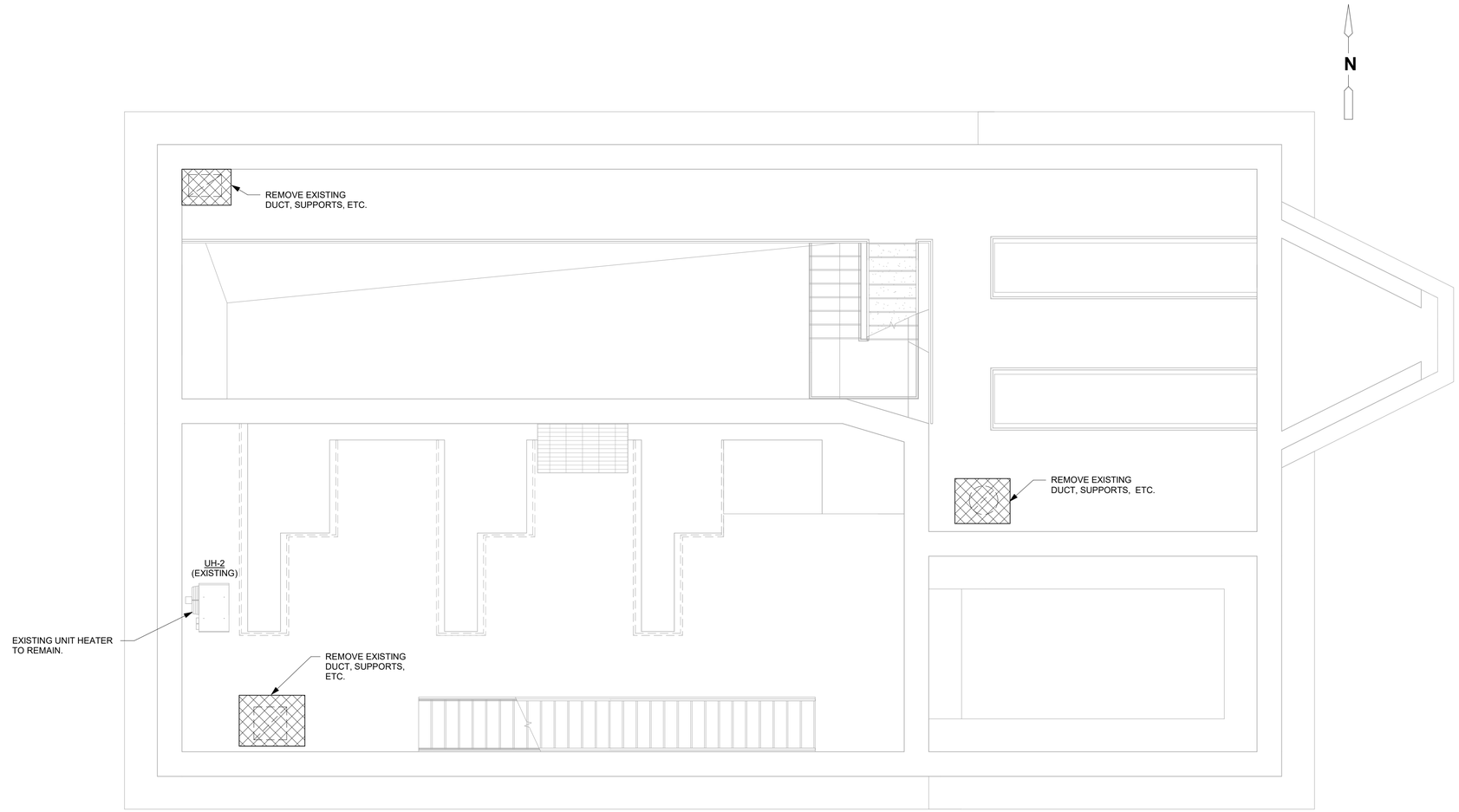


DEMOLITION NOTES:

1. COORDINATE DEMOLITION AND DISPOSAL WITH THE REQUIREMENTS OF THE SPECIFICATIONS AND THE OWNER.

2. CONTRACTOR SHALL FIELD VERIFY LOCATIONS, DIMENSIONS, AND CONFIGURATION OF ALL EXISTING EQUIPMENT, DUCTWORK, HANGERS, SUPPORTS, ANCHORS, CONTROLS, ETC.

3. SEE ARCHITECTURAL, STRUCTURAL, PLUMBING, PROCESS MECHANICAL, AND ELECTRICAL DRAWINGS FOR ADDITIONAL DEMOLITION IN THESE AREAS.

## WILSON LOWER LEVEL HVAC DEMOLITION PLAN

1/4" = 1'-0"

DATE:
JOSHUA H. MEINIG
PE NO. 72454

| REV. NO. | DATE | DRWN | CHKD | REMARKS |
|---|---|---|---|---|
| | | | | |

DESIGNED BY: J. MEINIG
DRAWN BY: A. STUART
SHEET CHK'D BY: P. POULIOT
CROSS CHK'D BY: J. GOLDMAN
APPROVED BY: J. MEINIG
DATE: FEBRUARY 2020

CDM Smith
4651 Salisbury Road, Suite 420
Jacksonville, FL 32256
Tel: (904) 731-7109
FL COA No. EB-0000020

JEA

WILSON BLVD. (180-45) AND 118th ST. (180-47)
MASTER PUMP STATION IMPROVEMENTS

WILSON BLVD.
LOWER LEVEL HVAC DEMOLITION PLAN

PROJECT NO. 6103-234169
FILE NAME: HWZ002PS.RVT

SHEET NO.
H-3

60% SUBMITTAL - NOT FOR CONSTRUCTION

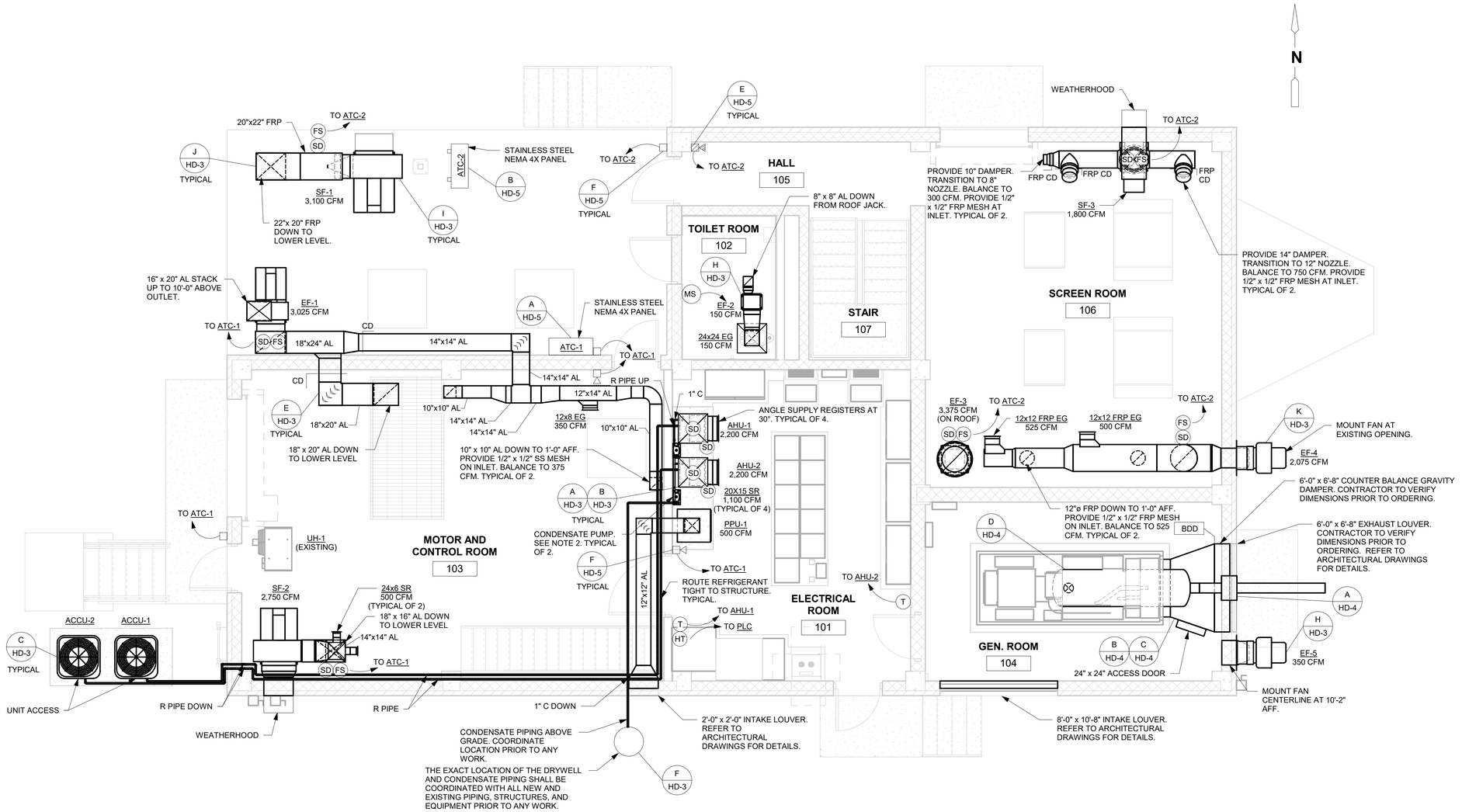


NOTES:

1. COORDINATE LOCATIONS OF ALL HVAC PIPING, DUCTWORK, AND EQUIPMENT WITH ALL OTHER UTILITIES, PIPING, ELECTRICAL DUCT BANKS, CONDUIT, WIRING, LIGHTING, BUILDING STRUCTURES, ETC.
2. CONDENSATE PUMP, LITTLE GIANT MODEL VCL-24ULS OR EQUAL. 1/18 HP, 115 VOLT, 60 HZ, 1 PHASE. 175 GPH AT 15'-0" HEAD. PROVIDE UNIT WITH 6'-0" CORD AND CHECK VALVE.
3. COIL COATINGS, ASSOCIATED REFRIGERANT PIPING AND REFRIGERANT CIRCUIT COMPONENTS WITHIN THE AHU AND CONDENSING UNIT CABINETS SHALL BE APPLIED BY BRONZ-GLOW TECHNOLOGIES INC. ALL FIELD PIPING IS TO BE COATED WITH BRONZ-GLOW TECHNOLOGIES INC. AEROSOL PLATINUM COLOR. NO OTHER COATING IS ACCEPTABLE.

## WILSON UPPER LEVEL HVAC MODIFICATION PLAN

1/4" = 1'-0"

DATE:
JOSHUA H. MEINIG
PE NO. 72454

| REV. NO. | DATE | DRWN | CHKD | REMARKS |
|---|---|---|---|---|
| | | | | |

DESIGNED BY: J. MEINIG
DRAWN BY: A. STUART
SHEET CHK'D BY: P. POULIOT
CROSS CHK'D BY: J. GOLDMAN
APPROVED BY: J. MEINIG
DATE: FEBRUARY 2020

CDM Smith
4651 Salisbury Road, Suite 420
Jacksonville, FL 32256
Tel: (904) 731-7109
FL COA No. EB-0000020

JEA

WILSON BLVD. (180-45) AND 118th ST. (180-47)
MASTER PUMP STATION IMPROVEMENTS

WILSON BLVD.
UPPER LEVEL HVAC MODIFICATION PLAN

PROJECT NO. 6103-234169
FILE NAME: HWZ002PS.RVT
SHEET NO.
H-4

60% SUBMITTAL - NOT FOR CONSTRUCTION

© 2019 CDM SMITH ALL RIGHTS RESERVED.
REUSE OF DOCUMENTS: THESE DOCUMENTS AND DESIGNS PROVIDED BY PROFESSIONAL SERVICE, INCORPORATED HEREIN, ARE THE PROPERTY OF CDM SMITH AND ARE NOT TO BE USER, IN WHOLE OR PART, FOR ANY OTHER PROJECT WITHOUT THE WRITTEN AUTHORIZATION OF CDM SMITH.

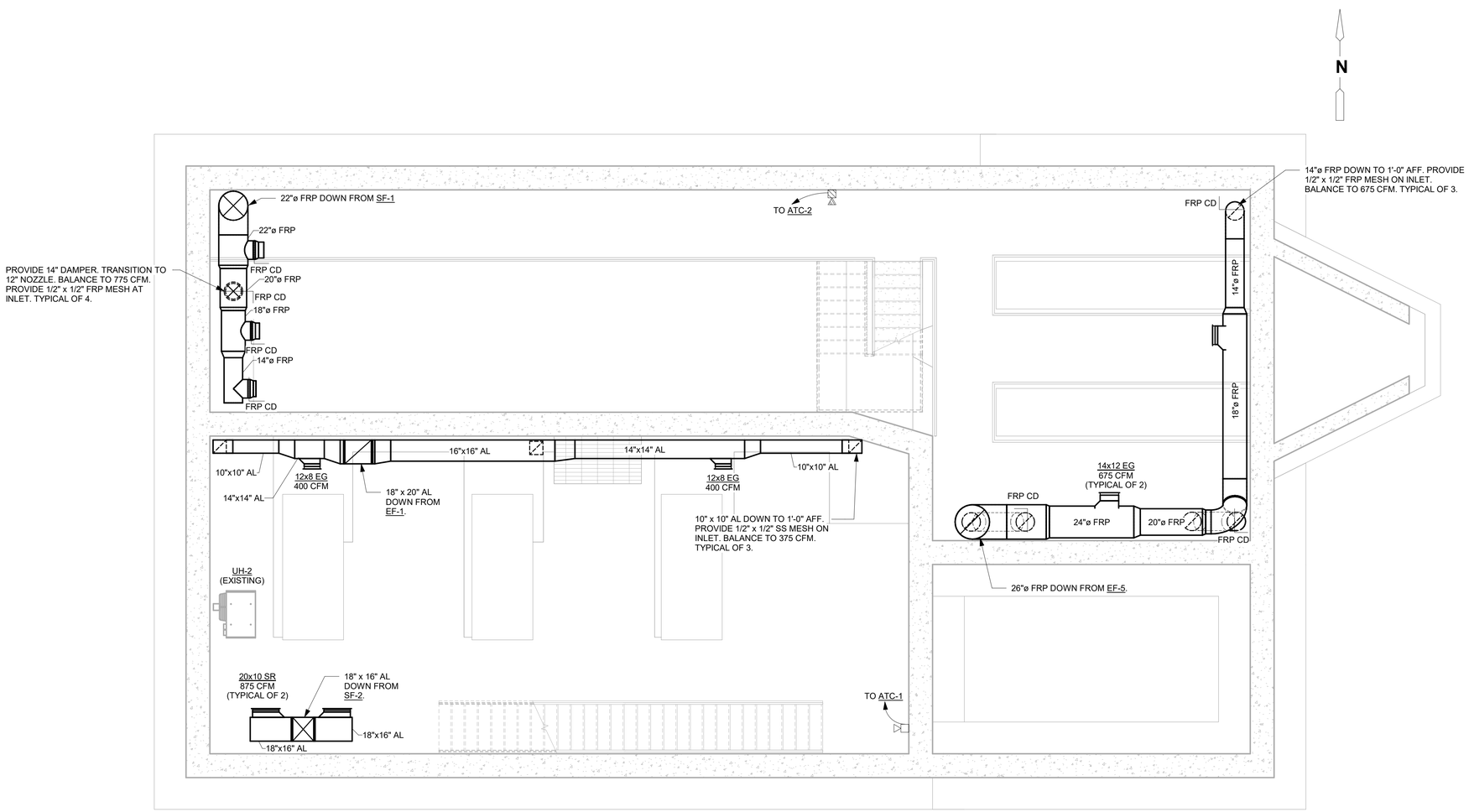


WILSON LOWER LEVEL HVAC MODIFICATION PLAN

1/4" = 1'-0"

DATE:
JOSHUA H. MEINIG
PE NO. 72454

| REV. NO. | DATE | DRWN | CHKD | REMARKS |
|---|---|---|---|---|
| | | | | |

DESIGNED BY: J. MEINIG
DRAWN BY: A. STUART
SHEET CHK'D BY: P. POULIOT
CROSS CHK'D BY: J. GOLDMAN
APPROVED BY: J. MEINIG
DATE: FEBRUARY 2020

CDM Smith
4651 Salisbury Road, Suite 420
Jacksonville, FL 32256
Tel: (904) 731-7109
FL COA No. EB-0000020

JEA

WILSON BLVD. (180-45) AND 118th ST. (180-47)
MASTER PUMP STATION IMPROVEMENTS

WILSON BLVD.
LOWER LEVEL HVAC MODIFICATION PLAN

PROJECT NO. 6103-234169
FILE NAME: HWZ002PS.RVT

SHEET NO.
H-5

60% SUBMITTAL - NOT FOR CONSTRUCTION

© 2019 CDM SMITH ALL RIGHTS RESERVED.
REUSE OF DOCUMENTS: THESE DOCUMENTS AND DESIGNS PROVIDED BY PROFESSIONAL SERVICE, INCORPORATED HEREIN, ARE THE PROPERTY OF CDM SMITH AND ARE NOT TO BE USER, IN WHOLE OR PART, FOR ANY OTHER PROJECT WITHOUT THE WRITTEN AUTHORIZATION OF CDM SMITH.

© 2019 CDM SMITH ALL RIGHTS RESERVED.
REUSE OF DOCUMENTS: THESE DOCUMENTS AND DESIGNS PROVIDED BY PROFESSIONAL SERVICE, INCORPORATED HEREIN, ARE THE PROPERTY OF CDM SMITH AND ARE NOT TO BE USER, IN WHOLE OR PART, FOR ANY OTHER PROJECT WITHOUT THE WRITTEN AUTHORIZATION OF CDM SMITH.

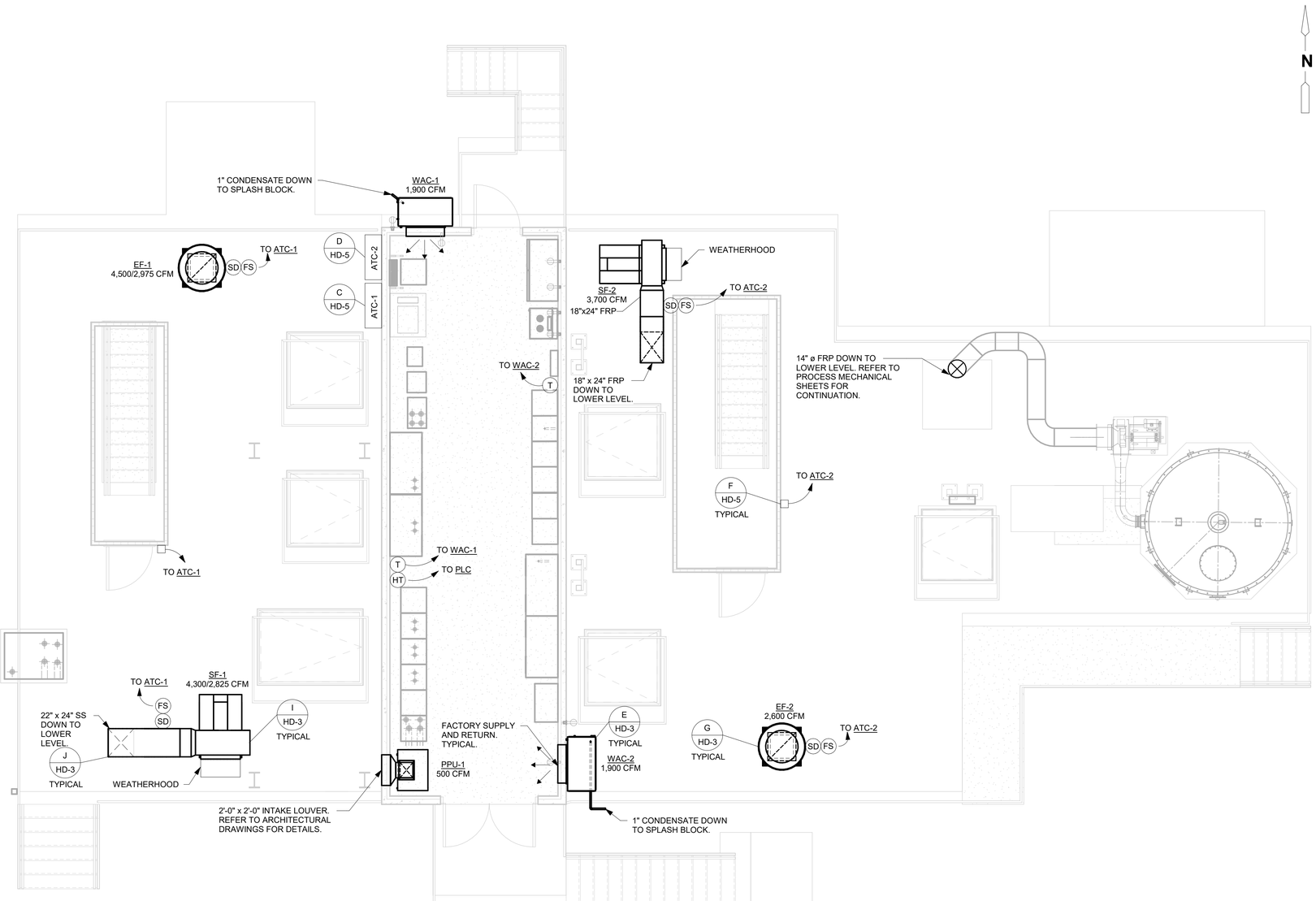


NOTES:

1. COIL COATINGS, ASSOCIATED REFRIGERANT PIPING AND REFRIGERANT CIRCUIT COMPONENTS WITHIN THE AHU AND CONDENSING UNIT CABINETS SHALL BE APPLIED BY BRONZ-GLOW TECHNOLOGIES INC. ALL FIELD PIPING IS TO BE COATED WITH BRONZ-GLOW TECHNOLOGIES INC. AEROSOL PLATINUM COLOR. NO OTHER COATING IS ACCEPTABLE.

## 118TH ST. UPPER LEVEL HVAC MODIFICATION PLAN

1/4" = 1'-0"

DATE:
JOSHUA H. MEINIG
PE NO. 72454

| REV. NO. | DATE | DRWN | CHKD | REMARKS |
|---|---|---|---|---|
| | | | | |

DESIGNED BY: J. MEINIG
DRAWN BY: A. STUART
SHEET CHK'D BY: P. POULIOT
CROSS CHK'D BY: J. GOLDMAN
APPROVED BY: J. MEINIG
DATE: FEBRUARY 2020

CDM Smith
4651 Salisbury Road, Suite 420
Jacksonville, FL 32256
Tel: (904) 731-7109
FL COA No. EB-0000020

JEA

WILSON BLVD. (180-45) AND 118th ST. (180-47)
MASTER PUMP STATION IMPROVEMENTS

118TH ST. UPPER LEVEL
HVAC MODIFICATION PLAN

PROJECT NO. 6103-234169
FILE NAME: HWZ001PS.RVT

SHEET NO.
H-6

60% SUBMITTAL - NOT FOR CONSTRUCTION

© 2019 CDM SMITH ALL RIGHTS RESERVED.
REUSE OF DOCUMENTS: THESE DOCUMENTS AND DESIGNS PROVIDED BY PROFESSIONAL SERVICE. INCORPORATED HEREIN, ARE THE PROPERTY OF CDM SMITH AND ARE NOT TO BE USER. IN WHOLE OR PART. FOR ANY OTHER PROJECT WITHOUT THE WRITTEN AUTHORIZATION OF CDM SMITH.

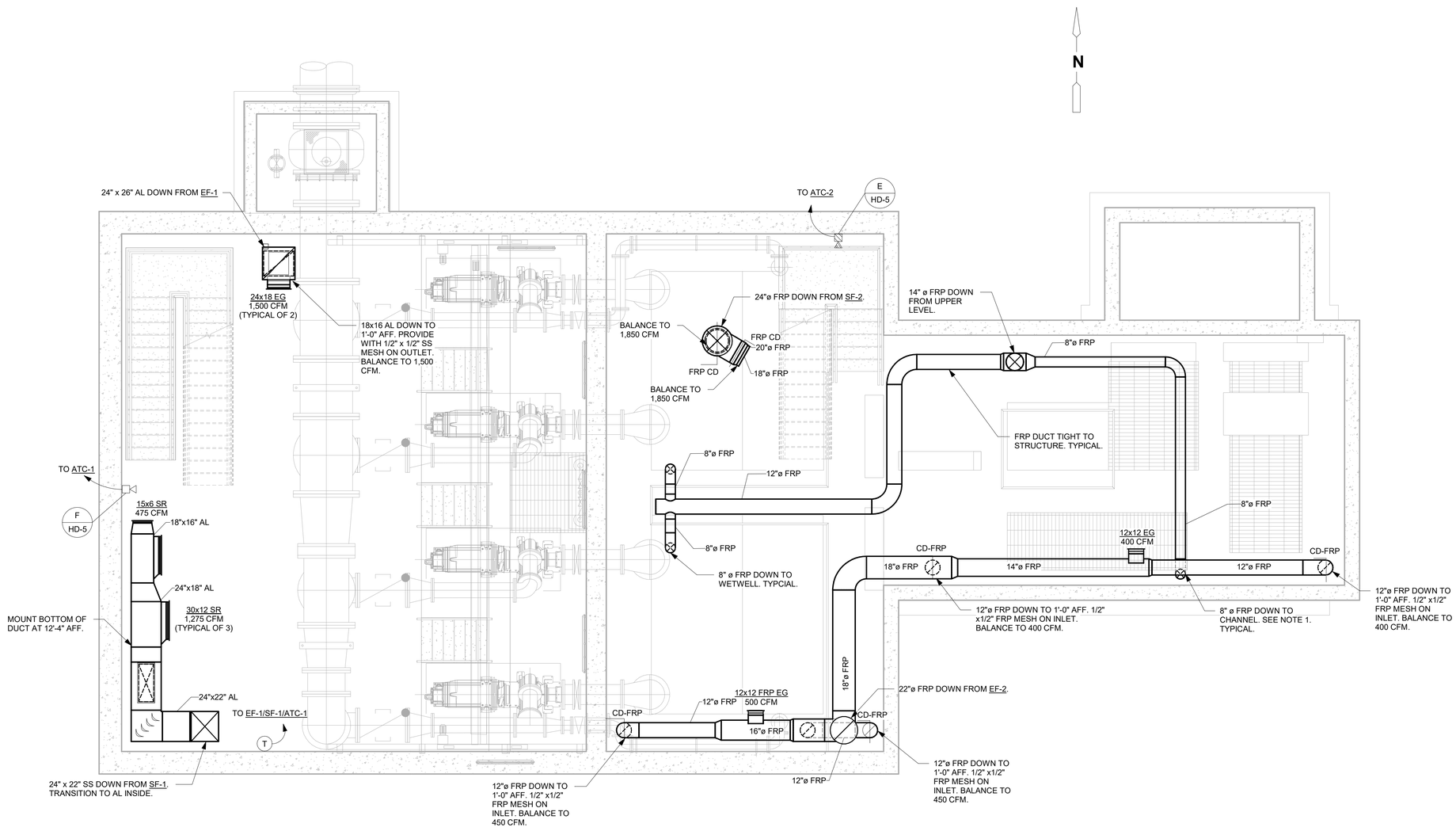


NOTES:

1. REFER TO PROCESS MECHANICAL SHEETS FOR ODOR CONTROL DUCT TO COVER DETAIL.

## 118TH ST. LOWER LEVEL HVAC MODIFICATION PLAN

1/4" = 1'-0"

DATE:
JOSHUA H. MEINIG
PE NO. 72454

| REV. NO. | DATE | DRWN | CHKD | REMARKS |
|---|---|---|---|---|

DESIGNED BY: J. MEINIG
DRAWN BY: A. STUART
SHEET CHK'D BY: P. POULIOT
CROSS CHK'D BY: J. GOLDMAN
APPROVED BY: J. MEINIG
DATE: FEBRUARY 2020

CDM Smith
4651 Salisbury Road, Suite 420
Jacksonville, FL 32256
Tel: (904) 731-7109
FL COA No. EB-0000020

JEA

WILSON BLVD. (180-45) AND 118th ST. (180-47)
MASTER PUMP STATION IMPROVEMENTS

118TH ST. LOWER LEVEL
HVAC MODIFICATIONPLAN

PROJECT NO. 6103-234169
FILE NAME: HWZ001PS.RVT

SHEET NO.
H-7

60% SUBMITTAL - NOT FOR CONSTRUCTION

## FAN SCHEDULE

| MARK | AREA SERVED | SHEET NO. | CFM | S.P. | TYPE | | | H.P. | VOLT | PHASE | RPM | MANUFACTURER | MODEL NO. | REMARKS | CONTROL |
|---|---|---|---|---|---|---|---|---|---|---|---|---|---|---|---|
| | | | | | SET | WHEEL | DRIVE | | | | | | | | |
| EF-1 | MOTOR AND CONTROL ROOM/PUMP ROOM | H-4 | 2,075 | 1" | SIDEWALL | CENT. | DIRECT | 1 | 460 V | 3ø | 1750 | M.K. PLASTICS | RBK-15-100FW | BS,DS,EC,EXP,FC,FRP,MOD,SS,TD | CONTINUOUS |
| EF-2 | TOILET ROOM | H-4 | 150 | 0.5" | INLINE | CENT. | DIRECT | 170 W | 115 V | 1ø | 1100 | GREENHECK | CSP-B200 | BDD, D, IH, ODP, SS, VI,VSC | MOTION SENSOR |
| EF-3 | SCREEN ROOM (LOWER LEVEL) | H-4 | 3,375 | 1" | ROOF | CENT. | DIRECT | 2 | 460 V | 3ø | 1750 | M.K. PLASTICS | RBK-18-66NW | BS,DS,EC,EXP,FC,FRP,MOD,SS,TD | CONTINUOUS |
| EF-4 | SCREEN ROOM (UPPER LEVEL) | H-4 | 2,075 | 1" | SIDEWALL | CENT. | DIRECT | 1 | 460 V | 3ø | 1750 | M.K. PLASTICS | RBK-15-100FW | BS,DS,EC,EXP,FC,FRP,MOD,SS,TD | CONTINUOUS |
| EF-5 | GENERATOR ROOM | H-4 | 350 | 0.5" | SIDEWALL | CENT. | DIRECT | 1/4 | 115 V | 1ø | 1140 | GREENHECK | CUE-099-B | A,BS,CS,DS,EC,HW,IH,SS,T,TE | THERMOSTAT |
| SF-1 | SCREEN ROOM (LOWER LEVEL) | H-4 | 3,100 | 1" | UTILITY | CENT. | BELT | 3 | 460 V | 3ø | 1251 | M.K. PLASTICS | CNW-315 | BS,CS,DS,EC,EXP,FRP,IH,SS,TD | CONTINUOUS |
| SF-2 | MOTOR AND CONTROL ROOM/PUMP ROOM | H-4 | 2,750 | 1" | UTILITY | CENT. | BELT | 3/4 | 460 V | 3ø | 1725 | GREENHECK | USF-22 | A,BS,CS,DS,EC,IH,SS,TE | CONTINUOUS |
| SF-3 | SCREEN ROOM (UPPER LEVEL) | H-4 | 1,800 | 1" | INLINE | CENT. | DIRECT | 1-1/2 | 460 V | 3ø | 2467 | M.K. PLASTICS | AXCL-1225 | BS,CS,DS,EC,EXP,FRP,IH,SS | CONTINUOUS |

A = ALL ALUMINUM CONSTRUCTION
BS = PVC COATED ALUMINUM BIRD SCREEN
CS = CURB SEAL
D = FACTORY DISCONNECT SWITCH
DS = STAINLESS STEEL NEMA 4X DISCONNECT SWITCH
EC = HI-PRO POLYESTER EPOXY COATED ENTIRE FAN, INCLUDING ALL ACCESSORIES
EXP = EXPLOSION-PROOF MOTOR
FC = EC COATED FACTORY ALUMINUM ROOF CURB
FRP = FIBERGLASS REINFORCED PLASTIC CONSTRUCTION
HW = HIGH WIND RATED
IH = INSULATED HOUSING
ODP = OPEN DRIP PROOF MOTOR
SS = STAINLESS STEEL FASTENERS AND SHAFT
T = HEAVY DUTY LINE VOLTAGE THERMOSTAT
TD = TIE DOWNS (SET OF 4)
TE = TOTALLY ENCLOSED FAN COOLED MOTOR
VSC =VARIABLE SPEED CONTROL

## AIR DISTRIBUTION DEVICE SCHEDULE

| SYMBOL | DESCRIPTION | MODEL | FRAME TYPE | MATERIAL | FINISH | REMARKS |
|---|---|---|---|---|---|---|
| CD | CONTROL DAMPER | RUSKIN CD-40 | CHANNEL | ALUMINUM | - | LOCKING HAND QUADRANT |
| RG | RETURN GRILLE HINGED | METAL*AIRE RHEF | PLASTER OR LAY-IN | ALUMINUM | OFF-WHITE ENAMEL | HINGED FILTER GRILLE |
| SR | SUPPLY REGISTER HIGH VELOCITY | METAL*AIRE RLD-DF | PLASTER | ALUMINUM | OFF-WHITE ENAMEL | OPPOSED BLADE DAMPER |
| EG | EXHAUST GRILLE HEAVY DUTY | METAL*AIRE HD-RH | PLASTER OR LAY-IN | ALUMINUM | OFF-WHITE ENAMEL | OPPOSED BLADE DAMPER |
| EG-FRP | EXHAUST GRILLE - FRP | - | - | FRP | FRP GEL COAT | OPPOSED BLADE DAMPER |
| CD-FRP | CONTROL DAMPER | RUSKIN | CHANNEL | FRP | - | LOCKING HAND QUADRANT |

## AIR COOLED CONDENSING UNIT SCHEDULE

| MARK | MATCH WITH | SYSTEM CAPACITY | | PIPING | | CONDENSER | | | | COMPRESSOR | | | | | REMARKS | MANUFACTURER MODEL | HEATING CAP. @ 47° F | HSPF |
|---|---|---|---|---|---|---|---|---|---|---|---|---|---|---|---|---|---|---|
| | | BTUH | SEER | SUCT. | LIQ. | OSA °F | CFM | ROWS | FLA | NO. | TYPE | RLA COMP | VOLT | PHASE | | | | |
| ACCU-2 | AHU-1 | 56.5 | 15.5 | SEE NOTE B | SEE NOTE B | 95 | - | SEE NOTE B | 1.3 | 1 | SCROLL | 32.1 | 208 V | 1 ø | SEE NOTES A, B, AND C BELOW | TRANE 4TTR7060A1 | - | - |
| ACCU-1 | AHU-2 | 56.5 | 15.5 | SEE NOTE B | SEE NOTE B | 95 | - | SEE NOTE B | 1.3 | 1 | SCROLL | 32.1 | 208 V | 1 ø | SEE NOTES A, B, AND C BELOW | TRANE 4TTR7060A1 | - | - |

NOTE A: PROVIDE UNIT WITH THE FOLLOWING OPTIONS: BRONZ-GLOW HUSKY DIPPED COIL COATING ON THE CONDENSER COILS, ON ALL ASSOCIATED REFRIGERANT TUBING WITHIN THE UNIT, AND ON ALL INTERCONNECTING REFRIGERANT PIPING BETWEEN THE CONDENSING UNIT AND THE AIR HANDLING UNIT, STAINLESS STEEL HARDWARE (EXTERNAL CABINET HARDWARE ONLY), NON-RUST BASE PAN, SERVICE VALVES, HIGH AND LOW PRESSURE SWITCHES, FILTER DRIER, PRESSURE RELIEF VALVE, THERMAL OVERLOAD, LOW AMBIENT CONTROLS TO 0°F, THERMOSTATIC EXPANSION VALVES, LIQUID LINE SOLENOID VALVE, CRANKCASE HEATER, EVAPORATOR FREEZE THERMOSTAT, COMPRESSOR START ASSISTANCE, TIME DELAY RELAY, SUPPORT FEET, OUTDOOR AIR TEMPERATURE SENSOR, TIE DOWN ANCHORS PER DETAIL C/HD-2.

NOTE B: FOR ALL UNITS, PROVIDE REFRIGERANT PIPING SIZES, COIL ROWS, CONDENSER FAN CFM, AND FINS PER THE MANUFACTURER'S RECOMMENDATIONS.

NOTE C: UNITS SHALL BE TRANE OR AMERICAN STANDARD.

## DUCTWORK MATERIAL SCHEDULE

| SYMBOL | DESCRIPTION |
|---|---|
| AL | ALUMINUM DUCTWORK PER SMACNA STANDARDS. |
| SS | STAINLESS STEEL DUCTWORK PER SMACNA STANDARDS |
| FRP | FIBERGLASS DUCTWORK PER SMACNA STANDARDS |

## AIR HANDLING UNIT SCHEDULE

| ITEM NO. | AREA SERVED | SHEET NO. | COOLING COIL DATA | | | | | | | CFM | OSA CFM | ESP | HP | VOLTAGE | AHU PHASE | DRIVE | FILTERS | | REMARKS | MANUFACTURER MODEL | AUX. ELECTRIC HEAT | | | |
|---|---|---|---|---|---|---|---|---|---|---|---|---|---|---|---|---|---|---|---|---|---|---|---|---|
| | | | ENTERING AIR | | LEAVING AIR | | TOTAL MBH | SENSIBLE MBH | ROWS FINS | | | | | | | | TYPE | SIZE NO. | | | KW | VOLT | PHASE | NO. OF STAGES |
| | | | DB | WB | LDB | LWB | | | | | | | | | | | | | | | | | | |
| AHU-1 | ELECTRICAL ROOM | H-4 | 80 | 62 | - | - | 54.5 | 52.4 | SEE NOTE B | 2,200 | 0 | 0.5" | 3/4 | 208 V | 1 ø | DIRECT | SEE NOTE A | SEE NOTE A | SEE NOTES A, B AND C | TRANE TEM6A0C60H51 | 3.60 | 208 V | 1 ø | 1 |
| AHU-2 | ELECTRICAL ROOM | H-4 | 80 | 62 | - | - | 54.5 | 52.4 | SEE NOTE B | 2,200 | 0 | 0.5" | 3/4 | 208 V | 1 ø | DIRECT | SEE NOTE A | SEE NOTE A | SEE NOTES A, B AND C | TRANE TEM6A0C60H51 | 3.60 | 208 V | 1 ø | 1 |

NOTE A: PROVIDE UNIT WITH THE FOLLOWING OPTIONS: BRONZ-GLOW HUSKY DIPPED COIL COATING ON THE EVAPORATOR COILS, ON ALL ASSOCIATED REFRIGERANT TUBING WITHIN THE UNIT, AND ON ALL INTERCONNECTING REFRIGERANT PIPING BETWEEN THE CONDENSING UNIT AND THE AIR HANDLING UNIT, STAINLESS STEEL HARDWARE (EXTERNAL CABINET HARDWARE ONLY), 1" THICK FARR 30/30 FILTERS (SEE DETAIL A/HD-2), UPBLAST DISCHARGE, CORROSION RESISTANT COIL CASING, CORROSION RESISTANT CONDENSATE PAN, TIME DELAY RELAY, FACTORY ELECTRIC HEATERS. PROGRAMMABLE 2-STAGE COOLING/2-STAGE HEATING THERMOSTAT, CONDENSATE DRAIN TRAP KIT, AND FILTER GAUGE.

NOTE B: FOR ALL UNITS, PROVIDE SAFE-T-SWITCH MODEL SS2, OR EQUAL, CONDENSATE OVERFLOW SHUT-OFF SWITCH ON THE AUXILIARY DRAIN CONNECTIONS OF EACH AIR HANDLING UNIT. INSTALL PER THE MANUFACTURER'S INSTRUCTIONS. PROVIDE ALL NECESSARY RELAYS, FITTINGS, WIRING, CONTACTS, ETC. FOR ALL UNITS, PROVIDE REFRIGERANT PIPING SIZES, COIL ROWS, AND FINS PER THE MANUFACTURER'S RECOMMENDATIONS.

NOTE C: UNITS SHALL BE TRANE OR AMERICAN STANDARD.

## CONTROL COMPONENT SCHEDULE

| SYMBOL | DESCRIPTION |
|---|---|
| (T) | HEAVY DUTY, NEMA 4X CORROSION RESISTANT LINE VOLTAGE THERMOSTAT (EXHAUST FAN) JOHNSON CONTROLS A19PRC-1C OR EQUAL WITH CLEAR LOCKING COVER. SET AT 85°F. REFER TO AIR HANDLING UNIT SCHEDULE AND THE SPECIFICATIONS FOR AIR CONDITIONING UNIT THERMOSTAT REQUIREMENTS. |
| (SD) | IONIZATION TYPE SMOKE DETECTOR SYSTEM SENSOR INNOVAIR MODEL DH100ACDCI OR EQUAL. REFER TO THE SPECIFICATIONS. FOR CLASSIFIED SPACES, PROVIDE EXPLOSION-PROOF SMOKE DETECTORS. |
| (HT) | HEAVY DUTY, CORROSION RESISTANT LINE VOLTAGE THERMOSTAT/HIGH TEMPERATURE SWITCH JOHNSON CONTROLS A19BAF-1C OR EQUAL WITH CLEAR LOCKING COVER. SET AT 95°F. |
| (FS) | THERMAL DISPERSION FLOW SENSOR. FLUID COMPONENTS INC FLT93B OR EQUAL. REFER TO THE SPECIFICATIONS FOR ADDITIONAL REQUIREMENTS. |
| ▽ □ | EXTERIOR LOCAL ALARM STATION (UNCLASSIFIED AREAS) - VISIBLE GREEN LIGHT/RED LIGHT (GO/NO GO). PROVIDE A STAINLESS STEEL NEMA 4X ENCLOSURE WITH THREE PILOT LIGHTS. FIRST PILOT LIGHT SHALL BE LABELED "VENTILATION SYSTEM NORMAL OPERATION" AND SHALL BE A GREEN STEADY BURN NEMA 4 30 MM STANDARD PILOT LIGHT, SQUARE D OR EQUAL. SECOND PILOT LIGHT SHALL BE LABELED "VENTILATION SYSTEM FAILURE" AND SHALL BE A RED FLASHING NEMA 4 30 MM STANDARD PILOT LIGHT, SQUARE D OR EQUAL. THIRD LIGHT SHALL BE LABELED "VENTILATION SYSTEM FAILURE ACKNOWLEDGED" AND SHALL BE A RED STEADY BURN NEMA 4 30 MM STANDARD PILOT LIGHT. ALARM STATION SHALL BE FIELD WIRED TO CHANGE FROM FLASHING PILOT LIGHT TO STEADY BURN PILOT LIGHT WHEN ALARM IS SILENCED/ACKNOWLEDGED AT THE ATC PANEL. STEADY BURN ALARM LIGHT SHALL REMAIN ON UNTIL RESET AT THE ATC PANEL. |
| □ | INTERIOR LOCAL ALARM STATION (UNCLASSIFIED AREAS) - VISIBLE AND AUDIBLE. PROVIDE A STAINLESS STEEL NEMA 4X ENCLOSURE WITH TWO PILOT LIGHTS AND AN ALARM HORN. FIRST PILOT LIGHT SHALL BE LABELED "VENTILATION SYSTEM FAILURE" AND SHALL BE A RED FLASHING NEMA 4 30 MM STANDARD PILOT LIGHT, SQUARE D OR EQUAL. SECOND LIGHT SHALL BE LABELED "VENTILATION SYSTEM FAILURE ACKNOWLEDGED" AND SHALL BE A RED STEADY BURN NEMA 4 30 MM STANDARD PILOT LIGHT, SQUARE D OR EQUAL. HORN SHALL BE FEDERAL SIGNAL CORPORATION (OR EQUAL) MODEL 350WBX VIBRATING HORN. ALARM STATION SHALL BE FIELD WIRED TO CHANGE FROM FLASHING PILOT LIGHT TO STEADY BURN PILOT LIGHT WHEN ALARM IS SILENCED/ACKNOWLEDGED AT THE ATC PANEL. STEADY BURN ALARM LIGHT SHALL REMAIN ON UNTIL RESET AT THE ATC PANEL. |
| ▽ ▨ | INTERIOR LOCAL ALARM STATION (CLASSIFIED AREAS) - VISIBLE AND AUDIBLE . PROVIDE A NEMA 7 JUNCTION BOX CROUSE-HINDS MODEL GU OR EQUAL, WITH TWO PILOT LIGHTS AND AN ALARM HORN. FIRST PILOT LIGHT SHALL BE LABELED "VENTILATION SYSTEM FAILURE" AND SHALL BE A RED FLASHING CLASS 1 DIV 2 STANDARD PILOT LIGHT, FEDERAL SIGNAL CORPORATION 191XL-S OR EQUAL. SECOND LIGHT SHALL BE LABELED "VENTILATION SYSTEM FAILURE ACKNOWLEDGED" AND SHALL BE A RED STEADY BURN CLASS 1 DIV 2 STANDARD PILOT LIGHT, FEDERAL SIGNAL CORPORATION 191XL-S OR EQUAL. HORN SHALL BE FEDERAL SIGNAL CORPORATION (OR EQUAL) MODEL 350WBX VIBRATING HORN. ALARM STATION SHALL BE FIELD WIRED TO CHANGE FROM FLASHING PILOT LIGHT TO STEADY BURN PILOT LIGHT WHEN ALARM IS SILENCED/ACKNOWLEGED AT THE ATC PANEL. STEADY BURN ALARM LIGHT SHALL REMAIN ON UNTIL RESET AT THE ATC PANEL. |

## AIR PURIFICATION SYSTEM UNIT SCHEDULE

| ITEM. NO. | NO. REQ'D | AREA SERVED | SHEET NO. | CFM | OSA CFM | HP | VOLT PHASE | FILTERS | | MANUFACTURER MODEL | REMARKS |
|---|---|---|---|---|---|---|---|---|---|---|---|
| | | | | | | | | TYPE | SIZE NO. | | |
| PPU-1 | 1 | ELECTRICAL ROOM | H-4 | 500 | 250 | 1 | 460 V 3ø | SEE NOTE A | SEE NOTE A | PURAFIL PPU-250V | SEE NOTE A |

NOTE A: PROVIDE UNIT WITH THE FOLLOWING OPTIONS: BRONZ-GLOW COATING AS SPECIFIED (INTERIOR INCLUDING ALL INTERIOR SURFACES, ETC.), PRE-FILTERS AND FINAL FILTERS AS SPECIFIED, INLET BALANCING DAMPER, VARIABLE SPEED DRIVE, AND VIBRATION ISOLATION PADS. REFER TO THE SPECIFICATIONS FOR ADDITIOINAL REQUIREMENTS.

DATE:
JOSHUA H. MEINIG
PE NO. 72454

| REV. NO. | DATE | DRWN | CHKD | REMARKS |
|---|---|---|---|---|
| | | | | |

DESIGNED BY: J. MEINIG
DRAWN BY: A. STUART
SHEET CHK'D BY: P. POULIOT
CROSS CHK'D BY: J. GOLDMAN
APPROVED BY: J. MEINIG
DATE: FEBRUARY 2020

CDM Smith
4651 Salisbury Road, Suite 420
Jacksonville, FL 32256
Tel: (904) 731-7109
FL COA No. EB-0000020

JEA

WILSON BLVD. (180-45) AND 118th ST. (180-47)
MASTER PUMP STATION IMPROVEMENTS

WILSON BLVD.
HVAC SCHEDULES

PROJECT NO. 6103-234169
FILE NAME: HWZ002PS.RVT
SHEET NO.
HD-1

60% SUBMITTAL - NOT FOR CONSTRUCTION

© 2019 CDM SMITH ALL RIGHTS RESERVED.
REUSE OF DOCUMENTS: THESE DOCUMENTS AND DESIGNS PROVIDED BY PROFESSIONAL SERVICE, INCORPORATED HEREIN, ARE THE PROPERTY OF CDM SMITH AND ARE NOT TO BE USER, IN WHOLE OR PART, FOR ANY OTHER PROJECT WITHOUT THE WRITTEN AUTHORIZATION OF CDM SMITH.

## FAN SCHEDULE

| MARK | AREA SERVED | SHEET NO. | CFM | S.P. | TYPE | | | H.P. | VOLT | PHASE | RPM | MANUFACTURER | MODEL NO. | REMARKS | CONTROL |
|---|---|---|---|---|---|---|---|---|---|---|---|---|---|---|---|
| | | | | | SET | WHEEL | DRIVE | | | | | | | | |
| EF-1 | PUMP ROOM | H-6 | 2,974 / 4,500 | 1.0" | ROOF | CENT. | BELT | 2 | 460 V | 3ø | 1140/1725 | GREENHECK | CUBE-180-20 | A,BS,CS,DS,EC,HW,IH,SS,T,TE2,VSC | CONTINUOUS/THERMOSTAT |
| EF-2 | SCREENS ROOM | H-6 | 2,600 (NOMINAL) | 1.0" | ROOF | CENT. | DIRECT | 5 | 460 V | 3ø | 3450 | M.K. PLASTICS | RBK-12-100FW | BS,DS,EC,EXP,FC,FRP,MOD,SS,TD | CONTINUOUS |
| SF-1 | PUMP ROOM | H-6 | 2,867 / 4,300 | 1.0" | UTILITY | CENT. | BELT | 1-1/2 | 460 V | 3ø | 1140/1725 | GREENHECK | USF-24 | A,BS,CS,DS,EC,IH,SS,T,TD,TE2,VSC | CONTINUOUS/THERMOSTAT |
| SF-2 | SCREENS ROOM | H-6 | 3,700 | 1.0" | UTILITY | CENT. | DIRECT | 4 | 460 V | 3ø | 1440 | M.K. PLASTICS | CNW-315 | BS,CS,DS,EC,EXP,FRP,IH,SS,TD | CONTINUOUS |

A = ALL ALUMINUM CONSTRUCTION
BS = PVC COATED ALUMINUM BIRD SCREEN
CS = CURB SEAL
D = FACTORY DISCONNECT SWITCH
DS = STAINLESS STEEL NEMA 4X DISCONNECT SWITCH
EC = HI-PRO POLYESTER EPOXY COATED ENTIRE FAN, INCLUDING ALL ACCESSORIES
EXP = EXPLOSION-PROOF MOTOR
FC = EC COATED FACTORY ALUMINUM ROOF CURB
FRP = FIBERGLASS REINFORCED PLASTIC CONSTRUCTION
HW = HIGH WIND RATED
IH = INSULATED HOUSING
SS = STAINLESS STEEL FASTENERS AND SHAFT
T = HEAVY DUTY LINE VOLTAGE THERMOSTAT
TD = TIE DOWNS (TYPICAL OF 4)
TE2 = TOTALLY ENCLOSED FAN COOLED MOTOR - 2 SPEED
VSC =VARIABLE SPEED CONTROL

## PACKAGED WALL AIR CONDITIONING UNIT SCHEDULE

| ITEM NO. | NO. REQ'D. | AREA SERVED | SHEET NO. | COIL DATA | | | | | FAN DATA | | | | | | FILTERS | | REMARKS | MANUFACTURER MODEL | COMPRESSOR | | | | | AUX. ELECTRICAL HEAT | | | |
|---|---|---|---|---|---|---|---|---|---|---|---|---|---|---|---|---|---|---|---|---|---|---|---|---|---|---|---|
| | | | | DB | WB | TOTAL MBH | SENSIBLE MBH | EER | CFM | OSA CFM | ESP | HP | DRIVE | VOLT PHASE | TYPE | SIZE NO. | | | NO. | TYPE | RLA | VOLT | PHASE | KW | VOLT | PHASE | NO. OF STAGES |
| WAC-1 | 1 | ELECTRICAL ROOM | H-6 | 80 | 67 | 67.5 | 42.8 | 10 | 1,900 | 0 | 0.25" | 3/4 | DIRECT | 460 V 3ø | SEE NOTE A | SEE NOTE A | SEE NOTES A AND B | BARD W72A | 1 | SCROLL | 9.1 | 460 V | 3ø | 5 | 208 V | 1ø | 1 |
| WAC-2 | 1 | ELECTRICAL ROOM | H-6 | 80 | 67 | 67.5 | 42.8 | 10 | 1,900 | 0 | 0.25" | 3/4 | DIRECT | 460 V 3ø | SEE NOTE A | SEE NOTE A | SEE NOTES A AND B | BARD W72A | 1 | SCROLL | 9.1 | 460 V | 3ø | 5 | 208 V | 1ø | 1 |

NOTE A: PROVIDE UNIT WITH THE FOLLOWING OPTIONS: HUSKY BRONZ-GLOW PLATINUM COATING (INTERIOR AND EXTERIOR), HUSKY BRONZ GLOW PLATINUM COIL COATING PER THE SPECIFICATIONS, DEHUMIDIFICATION MODE, PHASE ROTATION MONITOR, BAROMETRIC AIR DAMPER, LIQUID LINE FILTER DRIER, PROGRAMMABLE THERMOSTAT, HUMIDSTAT, 20" X 30' X 1" DISPOSABLE FILTERS, COMPRESSOR CONTROL MODULE, R-410A REFRIGERANT, FOIL FACED INSULATION, AND HIGH AND LOW PRESSURE SWITCHES.

NOTE B: UNIT SHALL BE MANUFACTURED BY BARD.

## AIR PURIFICATION SYSTEM UNIT SCHEDULE

| ITEM. NO. | NO. REQ'D | AREA SERVED | SHEET NO. | CFM | OSA CFM | HP | VOLT PHASE | FILTERS | | MANUFACTURER MODEL | REMARKS |
|---|---|---|---|---|---|---|---|---|---|---|---|
| | | | | | | | | TYPE | SIZE NO. | | |
| PPU-1 | 1 | ELECTRICAL ROOM | H-6 | 500 | 250 | 1 | 460 V 3ø | SEE NOTE A | SEE NOTE A | PURAFIL PPU-250V | SEE NOTE A |

NOTE A: PROVIDE UNIT WITH THE FOLLOWING OPTIONS: BRONZ-GLOW COATING AS SPECIFIED (INTERIOR INCLUDING ALL INTERIOR SURFACES, ETC.), PRE-FILTERS AND FINAL FILTERS AS SPECIFIED, INLET BALANCING DAMPER, VARIABLE SPEED DRIVE, AND VIBRATION ISOLATION PADS. REFER TO THE SPECIFICATIONS FOR ADDITIOINAL REQUIREMENTS.

## AIR DISTRIBUTION DEVICE SCHEDULE

| SYMBOL | DESCRIPTION | MODEL | FRAME TYPE | MATERIAL | FINISH | REMARKS |
|---|---|---|---|---|---|---|
| CD | CONTROL DAMPER | RUSKIN CD-40 | CHANNEL | ALUMINUM | - | LOCKING HAND QUADRANT |
| RG | RETURN GRILLE HINGED | METAL*AIRE RHEF | PLASTER OR LAY-IN | ALUMINUM | OFF-WHITE ENAMEL | HINGED FILTER GRILLE |
| SR | SUPPLY REGISTER HIGH VELOCITY | METAL*AIRE RLD-DF | PLASTER | ALUMINUM | OFF-WHITE ENAMEL | OPPOSED BLADE DAMPER |
| EG-FRP | EXHAUST GRILLE - FRP | - | - | FRP | FRP GEL COAT | OPPOSED BLADE DAMPER |
| CD-FRP | CONTROL DAMPER | RUSKIN | CHANNEL | FRP | - | LOCKING HAND QUADRANT |

## DUCTWORK MATERIAL SCHEDULE

| SYMBOL | DESCRIPTION |
|---|---|
| AL | ALUMINUM DUCTWORK PER SMACNA STANDARDS. |
| FRP | FIBERGLASS REINFORCED POLYMER PER SMACNA STANDARDS |
| SS | STAINLESS STEEL DUCTWORK PER SMACNA STANDARDS |

## CONTROL COMPONENT SCHEDULE

| SYMBOL | DESCRIPTION |
|---|---|
| (T) | HONEYWELL T6 PRO SERIES HP/CONVENTIONAL, NON-PROGRAMMABLE. |
| (SD) | IONIZATION TYPE SMOKE DETECTOR SYSTEM SENSOR INNOVAIR MODEL DH100ACDCI OR EQUAL. REFER TO THE SPECIFICATIONS. FOR CLASSIFIED SPACES, PROVIDE EXPLOSION-PROOF SMOKE DETECTORS. |
| (HT) | HEAVY DUTY, CORROSION RESISTANT LINE VOLTAGE THERMOSTAT/HIGH TEMPERATURE SWITCH JOHNSON CONTROLS A19BAF-1C OR EQUAL WITH CLEAR LOCKING COVER. SET AT 95°F. |
| (FS) | THERMAL DISPERSION FLOW SENSOR. FLUID COMPONENTS INC FLT93B OR EQUAL. REFER TO THE SPECIFICATIONS FOR ADDITIONAL REQUIREMENTS. |
| ▽ □ | EXTERIOR LOCAL ALARM STATION (UNCLASSIFIED AREAS) - VISIBLE GREEN LIGHT/RED LIGHT (GO/NO GO). PROVIDE A STAINLESS STEEL NEMA 4X ENCLOSURE WITH THREE PILOT LIGHTS. FIRST PILOT LIGHT SHALL BE LABELED "VENTILATION SYSTEM NORMAL OPERATION" AND SHALL BE A GREEN STEADY BURN NEMA 4 30 MM STANDARD PILOT LIGHT, SQUARE D OR EQUAL. SECOND PILOT LIGHT SHALL BE LABELED "VENTILATION SYSTEM FAILURE" AND SHALL BE A RED FLASHING NEMA 4 30 MM STANDARD PILOT LIGHT, SQUARE D OR EQUAL. THIRD LIGHT SHALL BE LABELED "VENTILATION SYSTEM FAILURE ACKNOWLEDGED" AND SHALL BE A RED STEADY BURN NEMA 4 30 MM STANDARD PILOT LIGHT. ALARM STATION SHALL BE FIELD WIRED TO CHANGE FROM FLASHING PILOT LIGHT TO STEADY BURN PILOT LIGHT WHEN ALARM IS SILENCED/ACKNOWLEDGED AT THE ATC PANEL. STEADY BURN ALARM LIGHT SHALL REMAIN ON UNTIL RESET AT THE ATC PANEL. |
| □ | INTERIOR LOCAL ALARM STATION (UNCLASSIFIED AREAS) - VISIBLE AND AUDIBLE. PROVIDE A STAINLESS STEEL NEMA 4X ENCLOSURE WITH TWO PILOT LIGHTS AND AN ALARM HORN. FIRST PILOT LIGHT SHALL BE LABELED "VENTILATION SYSTEM FAILURE" AND SHALL BE A RED FLASHING NEMA 4 30 MM STANDARD PILOT LIGHT, SQUARE D OR EQUAL. SECOND LIGHT SHALL BE LABELED "VENTILATION SYSTEM FAILURE ACKNOWLEDGED" AND SHALL BE A RED STEADY BURN NEMA 4 30 MM STANDARD PILOT LIGHT, SQUARE D OR EQUAL. HORN SHALL BE FEDERAL SIGNAL CORPORATION (OR EQUAL) MODEL 350WBX VIBRATING HORN. ALARM STATION SHALL BE FIELD WIRED TO CHANGE FROM FLASHING PILOT LIGHT TO STEADY BURN PILOT LIGHT WHEN ALARM IS SILENCED/ACKNOWLEDGED AT THE ATC PANEL. STEADY BURN ALARM LIGHT SHALL REMAIN ON UNTIL RESET AT THE ATC PANEL. |
| ▽ ▨ | INTERIOR LOCAL ALARM STATION (CLASSIFIED AREAS) - VISIBLE AND AUDIBLE . PROVIDE A NEMA 7 JUNCTION BOX CROUSE-HINDS MODEL GU OR EQUAL, WITH TWO PILOT LIGHTS AND AN ALARM HORN. FIRST PILOT LIGHT SHALL BE LABELED "VENTILATION SYSTEM FAILURE" AND SHALL BE A RED FLASHING CLASS 1 DIV 2 STANDARD PILOT LIGHT, FEDERAL SIGNAL CORPORATION 191XL-S OR EQUAL. SECOND LIGHT SHALL BE LABELED "VENTILATION SYSTEM FAILURE ACKNOWLEDGED" AND SHALL BE A RED STEADY BURN CLASS 1 DIV 2 STANDARD PILOT LIGHT, FEDERAL SIGNAL CORPORATION 191XL-S OR EQUAL. HORN SHALL BE FEDERAL SIGNAL CORPORATION (OR EQUAL) MODEL 350WBX VIBRATING HORN. ALARM STATION SHALL BE FIELD WIRED TO CHANGE FROM FLASHING PILOT LIGHT TO STEADY BURN PILOT LIGHT WHEN ALARM IS SILENCED/ACKNOWLEGED AT THE ATC PANEL. STEADY BURN ALARM LIGHT SHALL REMAIN ON UNTIL RESET AT THE ATC PANEL. |

DATE:
JOSHUA H. MEINIG
PE NO. 72454

| REV. NO. | DATE | DRWN | CHKD | REMARKS |
|---|---|---|---|---|

DESIGNED BY: J. MEINIG
DRAWN BY: A. STUART
SHEET CHK'D BY: P. POULIOT
CROSS CHK'D BY: J. GOLDMAN
APPROVED BY: J. MEINIG
DATE: FEBRUARY 2020

CDM Smith
4651 Salisbury Road, Suite 420
Jacksonville, FL 32256
Tel: (904) 731-7109
FL COA No. EB-0000020

JEA

WILSON BLVD. (180-45) AND 118th ST. (180-47)
MASTER PUMP STATION IMPROVEMENTS

118TH ST.
HVAC SCHEDULES

PROJECT NO. 6103-234169
FILE NAME: HWZ001PS.RVT

SHEET NO.
HD-2

© 2019 CDM SMITH ALL RIGHTS RESERVED.
REUSE OF DOCUMENTS. THEESE DOCUMENTS AND DESIGNS PROVIDED BY PROFESSIONAL SERVICE, INCORPORATED HEREIN, ARE THE PROPERTY OF CDM SMITH AND ARE NOT TO BE USER, IN WHOLE OR PART, FOR ANY OTHER PROJECT WITHOUT THE WRITTEN AUTHORIZATION OF CDM SMITH.

60% SUBMITTAL - NOT FOR CONSTRUCTION

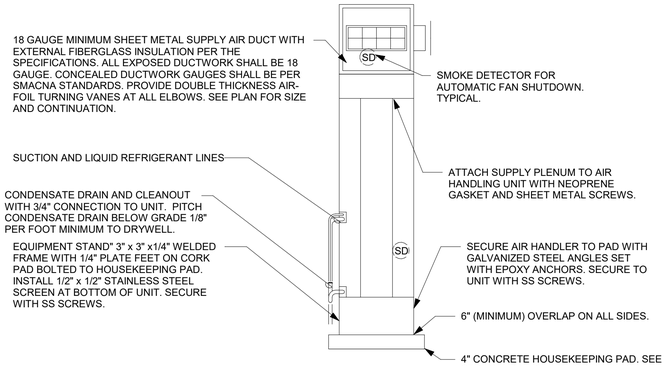


AHU MOUNTING

**A DETAIL**
NTS

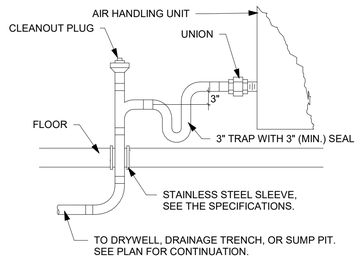


CONDENSATE DRAIN

**B DETAIL**
NTS

NOTE:
FOR EQUIPMENT TIE DOWNS SHOWN ON DETAIL C/HD-3, AT THE CONTRACTOR'S OPTION, ALTERNATE TIE DOWN METHODS MAY BE PROPOSED. ALTERNATE TIE DOWNS SHALL BE DESIGNED BY A PROFESSIONAL ENGINEER PER THE REQUIREMENTS OF THE SPECIFICATIONS.

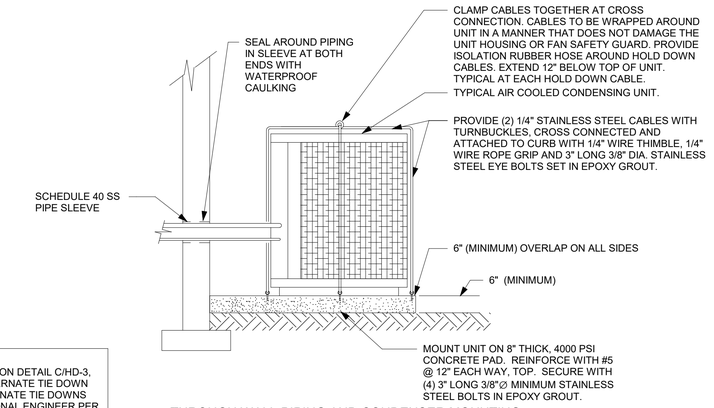


THROUGH WALL PIPING AND CONDENSER MOUNTING

**C DETAIL**
NTS

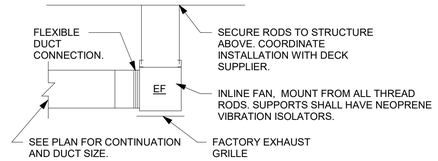


INLINE FAN MOUNTING

**D DETAIL**
NTS

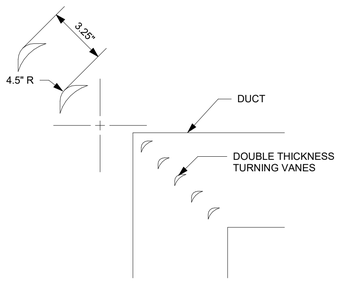


SHEET METAL
DUCT TURNING VANES

**E DETAIL**
NTS

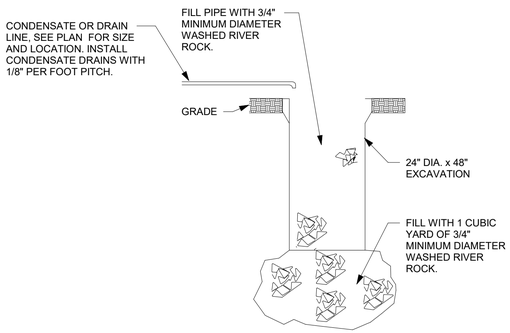


GRAVEL BED

**F DETAIL**
NTS

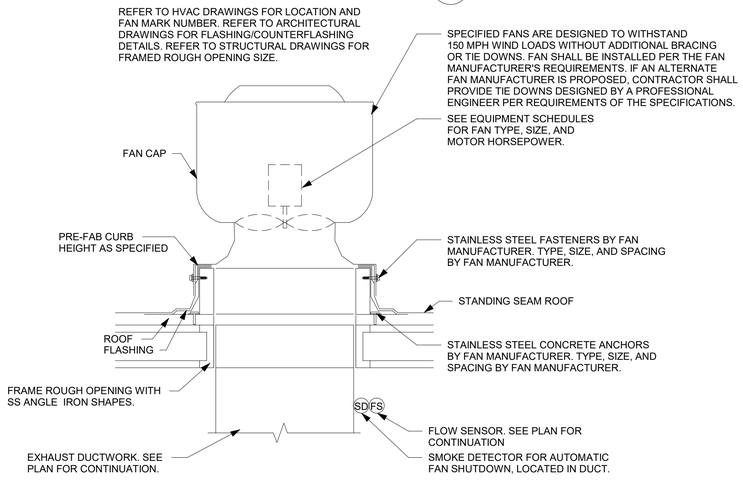


ROOF FAN

**G DETAIL**
NTS

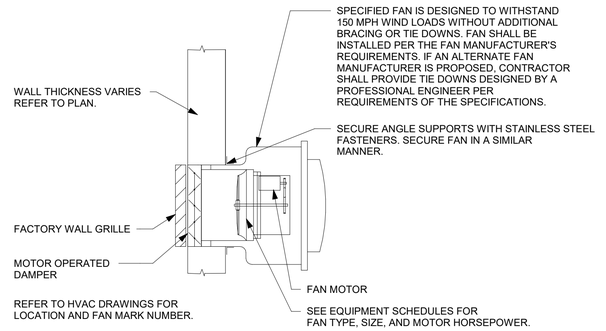


WALL FAN MOUNTING

**H DETAIL**
NTS

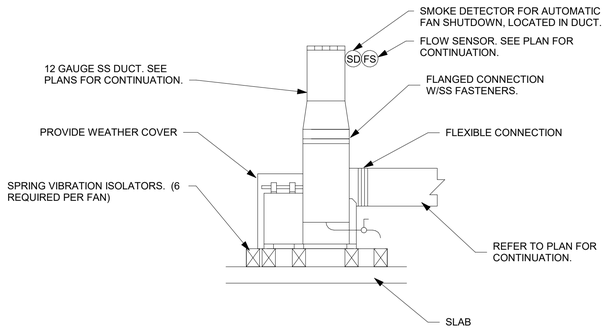


UTILITY SET FAN

**I DETAIL**
NTS

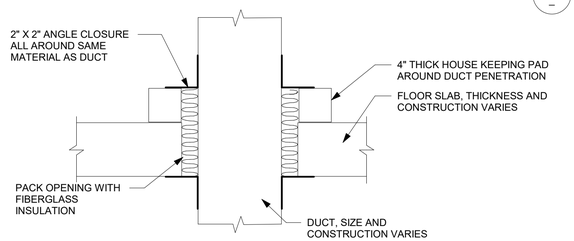


DUCT FLOOR PENETRATIONS TO BE USED
FOR ALL NON-FIRE RATED FLOORS

**J DETAIL**
NTS

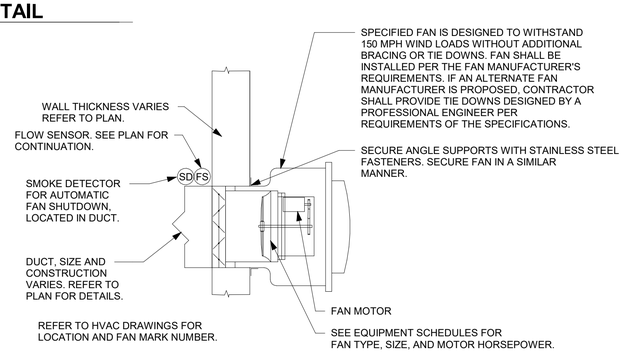


WALL FAN MOUNTING

**K DETAIL**
NTS

DATE:
JOSHUA H. MEINIG
PE NO. 72454

| REV. NO. | DATE | DRWN | CHKD | REMARKS |
|---|---|---|---|---|
| | | | | |

DESIGNED BY: J. MEINIG
DRAWN BY: A. STUART
SHEET CHK'D BY: P. POULIOT
CROSS CHK'D BY: J. GOLDMAN
APPROVED BY: J. MEINIG
DATE: FEBRUARY 2020

CDM Smith
4651 Salisbury Road, Suite 420
Jacksonville, FL 32256
Tel: (904) 731-7109
FL COA No. EB-0000020

JEA

WILSON BLVD. (180-45) AND 118th ST. (180-47)
MASTER PUMP STATION IMPROVEMENTS

HVAC DETAILS I

PROJECT NO. 6103-234169
FILE NAME: HWZ002PS.RVT

SHEET NO.
HD-3

© 2019 CDM SMITH ALL RIGHTS RESERVED.
REUSE OF DOCUMENTS: THESE DOCUMENTS AND DESIGNS PROVIDED BY PROFESSIONAL SERVICE, INCORPORATED HEREIN, ARE THE PROPERTY OF CDM SMITH AND ARE NOT TO BE USER, IN WHOLE OR PART, FOR ANY OTHER PROJECT WITHOUT THE WRITTEN AUTHORIZATION OF CDM SMITH.

60% SUBMITTAL - NOT FOR CONSTRUCTION

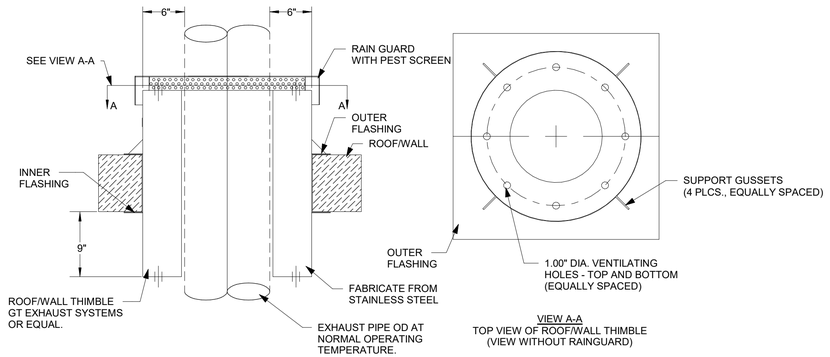


THIMBLE

**A DETAIL**
NTS

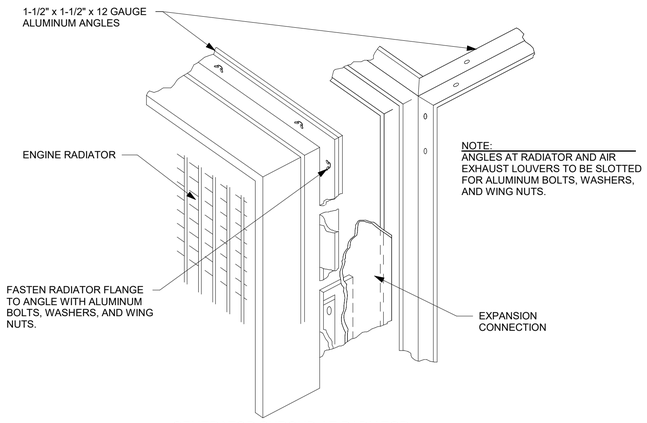


GENERATOR SHROUD AT RADIATOR

**B DETAIL**
NTS

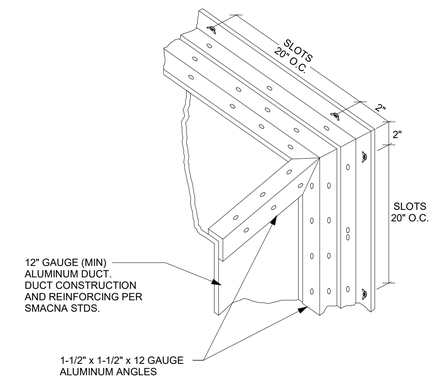


GENERATOR SHROUD

**C DETAIL**
NTS




SILENCER

**D DETAIL**
NTS




NOTES:
1. COORDINATE WALL OPENING SIZES WITH ACTUAL SIZES REQUIRED BY THE UNITS FURNISHED.
2. CONTRACTOR SHALL PROVIDE AND INSTALL FABRICATED EQUIPMENT STRAPS PER THE DETAIL ABOVE.
3. CONTRACTOR SHALL LOCATE THE STRAPS IN SUCH A WAY THAT ACCESS PANELS AND PERIODIC EQUIPMENT MAINTENANCE ARE NOT OBSTRUCTED.

WAC MOUNTING

**E DETAIL**
NTS

DATE:
JOSHUA H. MEINIG
PE NO. 72454

© 2019 CDM SMITH ALL RIGHTS RESERVED.
REUSE OF DOCUMENTS: THEESE DOCUMENTS AND DESIGNS PROVIDED BY PROFESSIONAL SERVICE, INCORPORATED HEREIN, ARE THE PROPERTY OF CDM SMITH AND ARE NOT TO BE USED IN WHOLE OR PART, FOR ANY OTHER PROJECT WITHOUT THE WRITTEN AUTHORIZATION OF CDM SMITH.

| REV. NO. | DATE | DRWN | CHKD | REMARKS |
|---|---|---|---|---|
| | | | | |

DESIGNED BY: J. MEINIG
DRAWN BY: A. STUART
SHEET CHK'D BY: P. POULIOT
CROSS CHK'D BY: J. GOLDMAN
APPROVED BY: J. MEINIG
DATE: FEBRUARY 2020

CDM Smith
4651 Salisbury Road, Suite 420
Jacksonville, FL 32256
Tel: (904) 731-7109
FL COA No. EB-0000020

JEA

WILSON BLVD. (180-45) AND 118th ST. (180-47)
MASTER PUMP STATION IMPROVEMENTS

HVAC DETAILS II

PROJECT NO. 6103-234169
FILE NAME: HWZ002PS.RVT

SHEET NO.
HD-4

60% SUBMITTAL - NOT FOR CONSTRUCTION

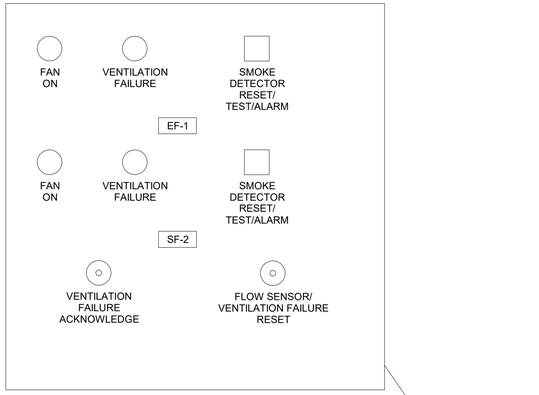


WILSON ATC-1

**A DETAIL**
NTS

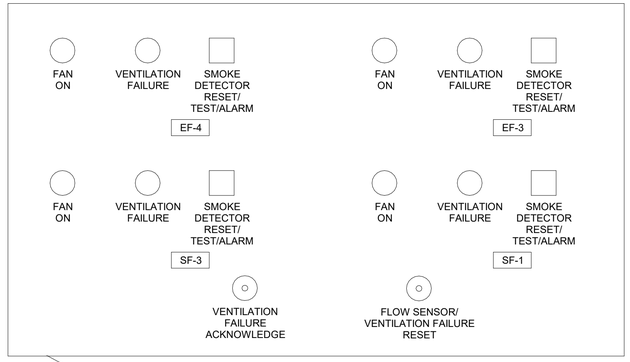


WILSON ATC-2

**B DETAIL**
NTS

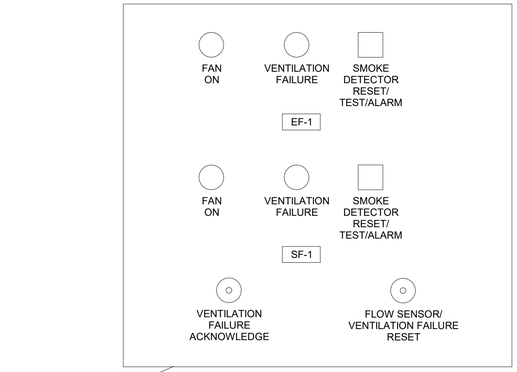


118 ATC-1

**C DETAIL**
NTS

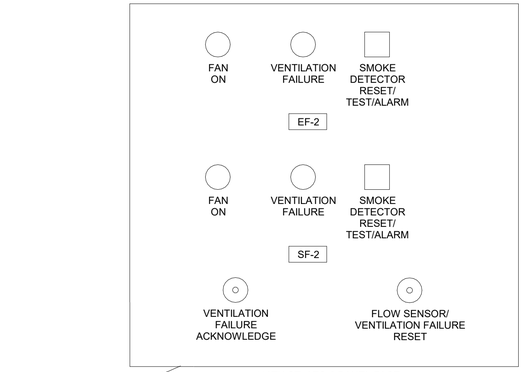


118 ATC-2

**D DETAIL**
NTS

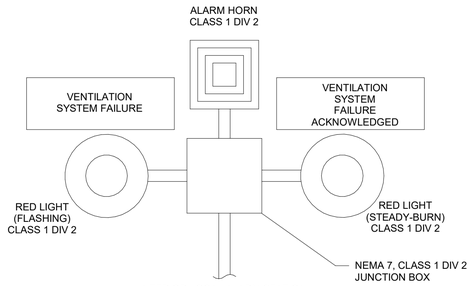


NOTE: ALL WIRING AND CONDUIT SHALL BE IN CONFORMANCE WITH THE REQUIREMMENTS FOR THE CLASSIFICATION PER THE SPECIFICATIONS..

**E DETAIL**
NTS

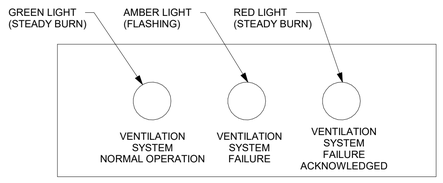


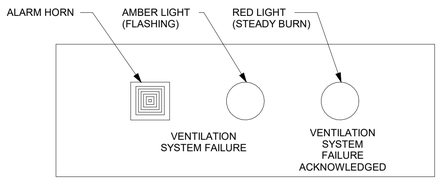


ALARM STATIONS

**F DETAIL**
NTS

DATE:
JOSHUA H. MEINIG
PE NO. 72454

© 2019 CDM SMITH ALL RIGHTS RESERVED.
REUSE OF DOCUMENTS: THESE DOCUMENTS AND DESIGNS PROVIDED BY PROFESSIONAL SERVICE, INCORPORATED HEREIN, ARE THE PROPERTY OF CDM SMITH AND ARE NOT TO BE USER, IN WHOLE OR PART, FOR ANY OTHER PROJECT WITHOUT THE WRITTEN AUTHORIZATION OF CDM SMITH.

| REV. NO. | DATE | DRWN | CHKD | REMARKS |
|---|---|---|---|---|
| | | | | |
| | | | | |
| | | | | |
| | | | | |
| | | | | |

DESIGNED BY: J. MEINIG
DRAWN BY: A. STUART
SHEET CHK'D BY: P. POULIOT
CROSS CHK'D BY: J. GOLDMAN
APPROVED BY: J. MEINIG
DATE: FEBRUARY 2020

CDM Smith
4651 Salisbury Road, Suite 420
Jacksonville, FL 32256
Tel: (904) 731-7109
FL COA No. EB-0000020

JEA

WILSON BLVD. (180-45) AND 118th ST. (180-47)
MASTER PUMP STATION IMPROVEMENTS

HVAC DETAILS III

PROJECT NO. 6103-234169
FILE NAME: HWZ002PS.RVT

SHEET NO.
HD-5

60% SUBMITTAL - NOT FOR CONSTRUCTION

| PLUMBING ABBREVIATIONS | |
|---|---|
| @ | AT |
| AD | AREA DRAIN |
| AFF | ABOVE FINISHED FLOOR |
| AV | ACID VENT |
| AW | ACID WASTE |
| BFF | BELOW FINISHED FLOOR |
| BFP | BACKFLOW PREVENTER |
| BWV | BACKWATER VALVE |
| BLDG | BUILDING |
| CL | CENTERLINE |
| CA | COMPRESSED AIR |
| CD | CAVITY DRAIN |
| CI | CAST IRON |
| CO | CLEANOUT |
| CONT | CONTINUOUS, CONTINUE |
| CS | CUP SINK |
| CU. FT. | CUBIC FEET |
| CV | CHECK VALVE |
| CW | COLD WATER |
| DI | DUCTILE IRON |
| DN | DOWN |
| DW | DISHWASHER |
| DWG | DRAWING |
| DWV | DRAIN WASTE VENT |
| E | EMERGENCY WATER |
| (E) | EXISTING, TO REMAIN |
| ECO | EXTERIOR CLEANOUT |
| ED | EQUIPMENT DRAIN |
| EL | ELEVATION |
| ES | EMERGENCY SHOWER |
| ES/EW | EMERGENCY SHOWER AND EYEWASH |
| EWC | ELECTRIC WATER COOLER |
| EWST | EMERGENCY WATER STORAGE TANK |
| EWU | EYEWASH UNIT |
| FAS | FLOW ALARM SWITCH |
| FCO | FLUSH FLOOR CLEANOUT |
| FD | FLOOR DRAIN |
| FE | FIRE EXTINGUISHER |
| FHV&C | FIRE HOSE VALVE AND CABINET |
| FS | FLOW SWITCH |
| FV | FIRE VALVE |
| F/BS | FACE/BODY SPRAY |
| G | GAS |
| GPM | GALLONS PER MINUTE |
| HB | HOSE BIBB |
| HD | HUB DRAIN |
| HEV | HOSE END VALVE |
| HP | HANDICAPPED |
| HW | HOT WATER |
| HWR | HOT WATER RETURN |
| INV | INVERT |
| IOS | INSTALLED BY OTHER SECTION |
| IPS | IRON PIPE SIZE |
| KS | KITCHEN SINK |
| KU | KITCHEN UNIT |
| LAB | LABORATORY |
| LAV | LAVATORY |

| PLUMBING ABBREVIATIONS | |
|---|---|
| LBV | LOCKABLE BALL VALVE |
| LCW | LAB COLD WATER |
| LHW | LAB HOT WATER |
| LS | LAB SINK |
| MAX | MAXIMUM |
| MB | MOP BASIN |
| MIN | MINIMUM |
| MXV | MIXING VALVE |
| NO | NUMBER |
| OED | OPEN END OR OPEN EQUIPMENT DRAIN |
| ORD | OVERFLOW ROOF DRAIN |
| ORL | OVERFLOW RAIN LEADER |
| PD | PUMP DISCHARGE |
| PG | PRESSURE GAUGE |
| PH | POST HYDRANT |
| PHW | PROTECTED HOT WATER |
| PP | POLYPROPYLENE |
| PRW | PRESSURE WASTE |
| PSI | POUNDS PER SQUARE INCH |
| P&T | PRESSURE & TEMPERATURE |
| PVC | POLYVINYL CHLORIDE |
| PW | PROTECTED WATER |
| RD | ROOF DRAIN |
| RL | RAINLEADER |
| RM | ROOM |
| RPZ | REDUCED PRESSURE ZONE BACKFLOW PREVENTER |
| S | SOIL |
| SH | SHOWER |
| SHT | SHEET |
| SP | SPRINKLER |
| SQ | SQUARE |
| SS | STAINLESS STEEL |
| SSK | SERVICE SINK |
| ST | SAND TRAP |
| TD | TRENCH DRAIN |
| THK | THICKNESS |
| TP | TRAP PRIMER |
| TW | TEPID WATER |
| TYP | TYPICAL |
| UR | URINAL |
| V | VENT |
| VAC | VACUUM |
| VB | VACUUM BREAKER |
| VE | VACUUM EXHAUST |
| VTR | VENT THROUGH ROOF |
| W | WASTE |
| W/ | WITH |
| WC | WATER CLOSET |
| WCO | WALL CLEANOUT |
| WF | WASH FOUNTAIN |
| WH | WALL HYDRANT |
| WHA | WATER HAMMER ARRESTOR |
| WHS | WASH HOSE STATION |
| W&V | WASTE & VENT |

NOTE:

1. SYMBOLS AND ABBREVIATIONS SHOWN ON THE SHEET ARE GENERIC AND MAY NOT HAVE BEEN USED ON THE PROJECT.

## PLUMBING SYMBOLS

- SOIL/SANITARY
- VENT
- COLD WATER (POTABLE)
- HOT WATER (POTABLE)
- HOT WATER RETURN (POTABLE)
- A — COMPRESSED AIR
- AV — ACID VENT
- AW — ACID WASTE
- E — EMERGENCY WATER
- ES — EMERGENCY WATER (EMERGENCY SHOWER-LAB ONLY)
- FL — FIRE LINE
- FS — FIRE SERVICE WATER (POTABLE)
- G — GAS
- LCW — LABORATORY COLD WATER (NON-POTABLE)
- LHW — LABORATORY HOT WATER (NON-POTABLE)
- PD — PUMP DISCHARGE
- PHW — PROTECTED HOT WATER (NON-POTABLE)
- PRW — PRESSURE WASTE
- RL — RAIN LEADER
- PW — PROTECTED WATER (NON-POTABLE)
- SP — SPRINKLER LINE
- V — VACUUM
- VE — VACUUM EXHAUST

- VALVE
- LOCKABLE BALL VALVE
- CHECK VALVE
- FLOW ALARM SWITCH
- ES/EW - EMERGENCY SHOWER/EYEWASH / FP-ES/EW - "FREEZE PROOF" ES/EW
- WHA — WATER HAMMER ARRESTOR
- CLEANOUTS
- FLUSH FLOOR CLEANOUT
- WATER PROOF SLEEVE
- FLOOR DRAIN OR ROOF DRAIN
- 1 — PROTECTED WATER CONNECTION IDENTIFICATION NUMBER
- OPEN END DRAIN
- EQUIPMENT PROVIDED UNDER PLUMBING SECTION
- EQUIPMENT PROVIDED BY OTHERS REQUIRING PLUMBING CONNECTIONS
- DN OR DROP — "DN" DENOTES PIPES WHICH PENETRATE THR FLOOR BELOW. "DROP" DENOTES PIPES WHICH DO NOT.
- UP OR RISE — "UP" DENOTES PIPES WHICH PENETRATE THR FLOOR ABOVE. "RISE" DENOTES PIPES WHICH DO NOT.

THE TERMS "DN", "DROP", "UP", & "RISE" ARE USED TO INDICATE THE VERTICAL DIRECTION IN WHICH A PIPE LINE CONTINUES FROM THE IMAGINARY PLANE OF VIEW. THE TERMS HAVE NO RELEVANCE TO THE DIRECTION OF THE FLOW WITHIN THE PIPE LINE.

- POINT WHERE NEW CONSTRUCTION CONNECTS TO EXISTING CONSTRUCTION
- POINT BETWEEN EXISTING CONSTRUCTION TO REMAIN AND EXISTING CONSTRUCTION TO BE DEMOLISHED
- MIXING VALVE

| TANKLESS ELECTRIC WATER HEATER SCHEDULE | | | | | | | | | | |
|---|---|---|---|---|---|---|---|---|---|---|
| TAG | SERVES | MANUFACTURER | MODEL | FLOW RATE (GPM) | TEMP RISE @ 0.5 GPM | ELEMENT KW | VOLTS | PHASE | AMPS | REMARKS |
| EWH-1 | TOILET ROOM | EEMAX OR EQUAL | EX 3208T OR EQUAL | 2.0 (MAX) | 41 | 3 | 208 | 1ø | 15 | SEE NOTE 1 |

NOTE 1: HEATER SHALL HAVE ABS-UL RATED COVER, ELEMENT SHALL BE REPLACEABLE CARTRIDGE INSERT, FACTORY RESET TO 110 °F WITH 0.3 GPM TURN ON FOR SENSOR AND METERING FAUCETS. REFER TO THE SPECIFICATIONS FOR ADDITIONAL REQUIREMENTS.

| FIXTURE SCHEDULE | | | | | |
|---|---|---|---|---|---|
| FIXTURE | DESCRIPTION | WASTE | HOT WATER | COLD WATER | PROTECTED WATER |
| LAV-HP | LAVATORY - HANDICAPPED | 1-1/4" | 1/2" | 1/2" | - |
| WC-HP | WATER CLOSET - HANDICAPPED | 3" | - | 1-1/2" | - |
| HB | HOSE BIBB | - | - | 3/4" | - |
| HB-2 | HOSE BIBB -2 | - | - | - | 3/4" |

DATE:
JOSHUA H. MEINIG
PE NO. 72454

| REV. NO. | DATE | DRWN | CHKD | REMARKS |
|---|---|---|---|---|
| | | | | |

DESIGNED BY: J. MEINIG
DRAWN BY: A. STUART
SHEET CHK'D BY: P. POULIOT
CROSS CHK'D BY: J. GOLDMAN
APPROVED BY: J. MEINIG
DATE: JANUARY 2020

CDM Smith
4651 Salisbury Road, Suite 420
Jacksonville, FL 32256
Tel: (904) 731-7109
FL COA No. EB-0000020

JEA

WILSON BLVD. (180-45) AND 118th ST. (180-47)
MASTER PUMP STATION IMPROVEMENTS

PLUMBING SYMBOLS AND ABBREVIATIONS

PROJECT NO. 6103-234169
FILE NAME: PWZ002PS.RVT

SHEET NO.
P-1

60% SUBMITTAL - NOT FOR CONSTRUCTION

© 2019 CDM SMITH ALL RIGHTS RESERVED.
REUSE OF DOCUMENTS. THEESE DOCUMENTS AND DESIGNS PROVIDED BY PROFESSIONAL SERVICE, INCORPORATED HEREIN, ARE THE PROPERTY OF CDM SMITH AND ARE NOT TO BE USER, IN WHOLE OR PART, FOR ANY OTHER PROJECT WITHOUT THE WRITTEN AUTHORIZATION OF CDM SMITH.

© 2019 CDM SMITH ALL RIGHTS RESERVED.
REUSE OF DOCUMENTS: THEESE DOCUMENTS AND DESIGNS PROVIDED BY PROFESSIONAL SERVICE, INCORPORATED HEREIN, ARE THE PROPERTY OF CDM SMITH AND ARE NOT TO BE USER, IN WHOLE OR PART, FOR ANY OTHER PROJECT WITHOUT THE WRITTEN AUTHORIZATION OF CDM SMITH.

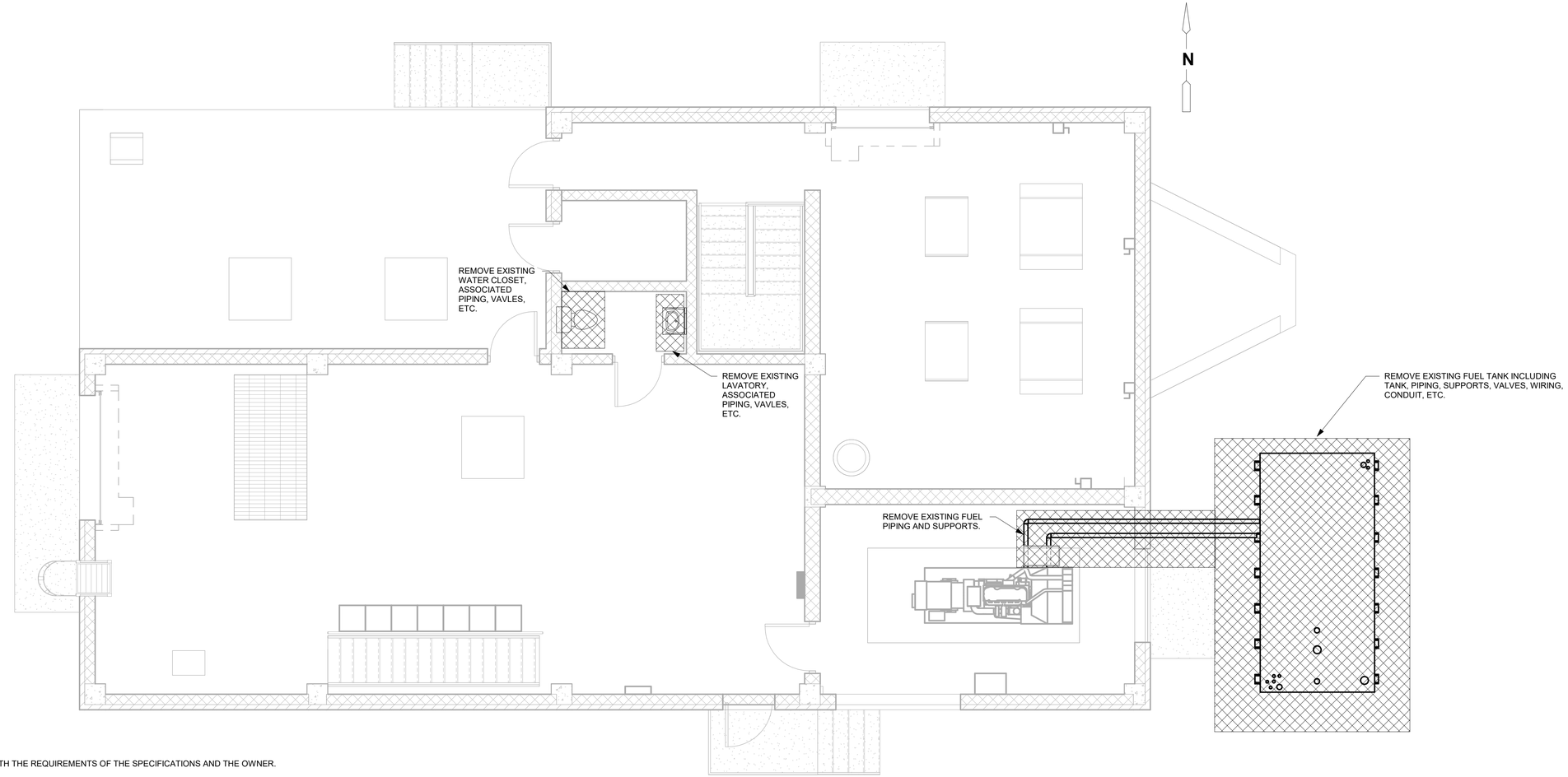


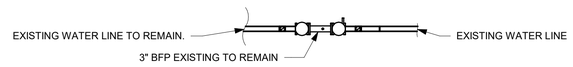


GENERAL DEMOLITION NOTES:

1. COORDINATE DEMOLITION AND DISPOSAL WITH THE REQUIREMENTS OF THE SPECIFICATIONS AND THE OWNER.

2. CONTRACTOR SHALL FIELD VERIFY LOCATIONS, DIMENSIONS, AND CONFIGURATION OF ALL EXISTING EQUIPMENT, DUCTWORK, HANGERS, SUPPORTS, ANCHORS, CONTROLS, ETC.

3. SEE ARCHITECTURAL, STRUCTURAL, HVAC, PROCESS MECHANICAL, AND ELECTRICAL DRAWINGS FOR ADDITIONAL DEMOLITION IN THESE AREAS.

FUEL TANK DEMOLITION NOTES:

1. CONTRACTOR SHALL OBTAIN NECESSARY PERMITS FOR DEMOLITION AND NEW CONSTRUCTION BEFORE STARTING WORK AS REQUIRED BY JEA CODE OF ORDINANCES, AND THE STATE OF FLORIDA ADMINISTRATIVE CODE, CHAPTER 62-761. CONTRACTOR SHALL PROPERLY DECOMMISSION THEN DEMOLISH EXISTING STORAGE TANK, TANK ANCHORS, PIPING, AND APPURTENANCES.

2. DEMOLITION AND REMOVAL SHALL MEET THE REQUIREMENTS OF THE SPECIFICATIONS, AS WELL AS COUNTY AND STATE REQUIREMENTS CITED ABOVE. CONTRACTOR SHALL SUBMIT REQUIRED CLOSURE DOCUMENTS OF DEMOLISHED TANK AND FUEL SYSTEMS TO FDPEP AND PROPERLY DISPOSE OF ALL MATERIAL AND DEBRIS.

3. CONTRACTOR SHALL PERFORM A UTILITY SITE SURVEY FOR THE AREA AROUND THE PUMP STATION AND LOCATE ALL UTILITIES WITHIN 75 FEET OF THE EXISTING TANK. ALL UTILITIES THAT MAY POSSIBLY INTERFERE WITH THE TANK DEMOLITION SHALL BE REPORTED TO THE OWNER. ANY UTILITIES THAT CONFLICT WITH THE WORK MUST BE IDENTIFIED AND REMEDIATED WITH THE OWNER PRIOR TO DECOMMISSIONING TANK OR PERFORMING THE WORK.

4. CONTRACTOR SHALL PROPERLY SUPPORT THE EXCAVATION WHEN REMOVING UNDERGROUND TANK, TANK ANCHORS, ACCESSORIES, PIPING AND APPURTENANCES. CONTRACTOR SHALL PROVIDE SHEET PILES AND SHORING AS NECESSARY FOR THE DEMOLITION OF THE EXISTING FUEL SYSTEM AND FOR THE INSTALLATION OF THE NEW FUEL TANK AND PIPING. SHEETING AND SHORING SHALL TAKE INTO CONSIDERATION THE NEARBY BUILDING FOUNDATION AND GROUND WATER TABLE. REFER TO SPECIFICATIONS.

5. ALL WORK SHALL COMPLY WITH THE STATE OF FLORIDA DEP AND JEA REQUIREMENTS. PROVIDE SOIL SAMPLING AND REMEDIATE ANY SPILLAGE THAT MAY HAVE OCCURRED.

6. CONTRACTOR SHALL DEMOLISH ALL FUEL PIPING INSIDE THE GENERATOR ROOM, DAY TANK AND ALL FUEL SYSTEM APPURTANCES.

7. CONTRACTOR SHALL DEMOLISH EXISTING LEAK DETECTION MONITORS AND SENSORS.

## WILSON UPPER LEVEL PLUMBING DEMOLITION PLAN

1/4" = 1'-0"

DATE:
JOSHUA H. MEINIG
PE NO. 72454

| REV. NO. | DATE | DRWN | CHKD | REMARKS |
|---|---|---|---|---|
| | | | | |

DESIGNED BY: J. MEINIG
DRAWN BY: A. STUART
SHEET CHK'D BY: P. POULIOT
CROSS CHK'D BY: J. GOLDMAN
APPROVED BY: J. MEINIG
DATE: JANUARY 2020

CDM Smith
4651 Salisbury Road, Suite 420
Jacksonville, FL 32256
Tel: (904) 731-7109
FL COA No. EB-0000020

JEA

WILSON BLVD. (180-45) AND 118th ST. (180-47)
MASTER PUMP STATION IMPROVEMENTS

WILSON BLVD.
UPPER LEVEL PLUMBING DEMOLITION PLAN

PROJECT NO. 6103-234169
FILE NAME: PWZ0002PS.RVT

SHEET NO.
P-2

60% SUBMITTAL - NOT FOR CONSTRUCTION

© 2019 CDM SMITH ALL RIGHTS RESERVED.
REUSE OF DOCUMENTS: THESE DOCUMENTS AND DESIGNS PROVIDED BY PROFESSIONAL SERVICE, INCORPORATED HEREIN, ARE THE PROPERTY OF CDM SMITH AND ARE NOT TO BE USED, IN WHOLE OR PART, FOR ANY OTHER PROJECT WITHOUT THE WRITTEN AUTHORIZATION OF CDM SMITH.

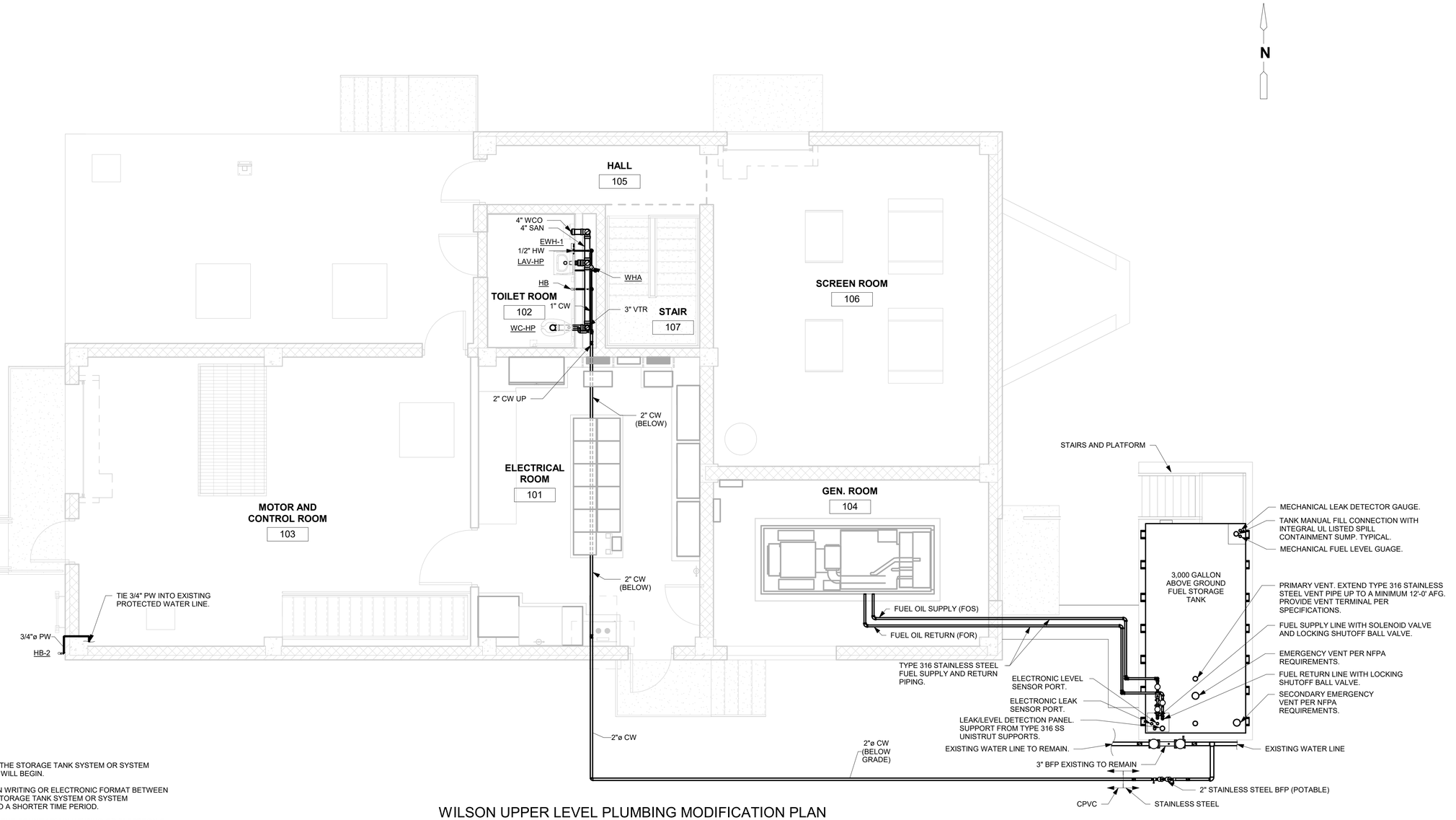


NOTES:

1. INSTALLATION SHALL MEAN THE DATE THAT THE STORAGE TANK SYSTEM OR SYSTEM COMPONENT PLACEMENT OR CONSTRUCTION WILL BEGIN.

2. CONTRACTOR SHALL NOTIFY THE COUNTY IN WRITING OR ELECTRONIC FORMAT BETWEEN 30 AND 45 DAYS BEFORE INSTALLATION OF A STORAGE TANK SYSTEM OR SYSTEM COMPONENT UNLESS THE COUNTY AGREES TO A SHORTER TIME PERIOD.

3. NOTIFICATION SHALL ALSO BE RECEIVED BY THE COUNTY PM IN WRITING OR ELECTRONIC FORMAT BETWEEN 48 AND 72 HOURS PRIOR TO THE INSTALLATION WORK TO CONFIRM THE DATE AND TIME OF THE SCHEDULED ACTIVITIES.

4. THE ENTIRE SYSTEM INCLUDING THE TANKS, PIPING, EQUIPMENT, AND LEAK DETECTION SYSTEM SHALL BE INSPECTED AND APPROVED BY DEP.

5. CONTRACTOR SHALL OBTAIN WRITTEN APPROVAL OF THE INSTALLATION FROM THE LOCAL FIRE OFFICIAL OF JURISDICTION.

6. CONTRACTOR SHALL PROVIDE NEW FUEL PIPING IN ACCORDANCE WITH THE SPECIFICATIONS. FUEL SYSTEM SHALL BE A COMPLETE AND USEABLE SYSTEM SUPPLYING FUEL TO THE FACILITY EMERGENCY GENERATORS.

7. NEW FUEL PIPING, SYSTEMS, AND/OR MODIFICATIONS TO EXISTING FUEL SYSTEMS SHALL MEET THE REQUIREMENTS OF FAC CHAPTER 62-761 AND 62-767, NFPA 30 AND 37. REFER TO SPECIFICATIONS.

## WILSON UPPER LEVEL PLUMBING MODIFICATION PLAN

1/4" = 1'-0"

DATE:
JOSHUA H. MEINIG
PE NO. 72454

| REV. NO. | DATE | DRWN | CHKD | REMARKS |
|---|---|---|---|---|
| | | | | |

DESIGNED BY: J. MEINIG
DRAWN BY: C. JOHNSON
SHEET CHK'D BY: P. POULIOT
CROSS CHK'D BY: J. GOLDMAN
APPROVED BY: J. MEINIG
DATE: JANUARY 2020

CDM Smith
4651 Salisbury Road, Suite 420
Jacksonville, FL 32256
Tel: (904) 731-7109
FL COA No. EB-0000020

JEA

WILSON BLVD. (180-45) AND 118th ST. (180-47)
MASTER PUMP STATION IMPROVEMENTS

WILSON BLVD.
UPPER LEVEL PLUMBING MODIFICATION PLAN

PROJECT NO. 6103-234169
FILE NAME: PWZ002PS.RVT

SHEET NO.
P-3

60% SUBMITTAL - NOT FOR CONSTRUCTION

© 2019 CDM SMITH ALL RIGHTS RESERVED.
REUSE OF DOCUMENTS: THESE DOCUMENTS AND DESIGNS PROVIDED BY PROFESSIONAL SERVICE, INCORPORATED HEREIN, ARE THE PROPERTY OF CDM SMITH AND ARE NOT TO BE USER, IN WHOLE OR PART, FOR ANY OTHER PROJECT WITHOUT THE WRITTEN AUTHORIZATION OF CDM SMITH.

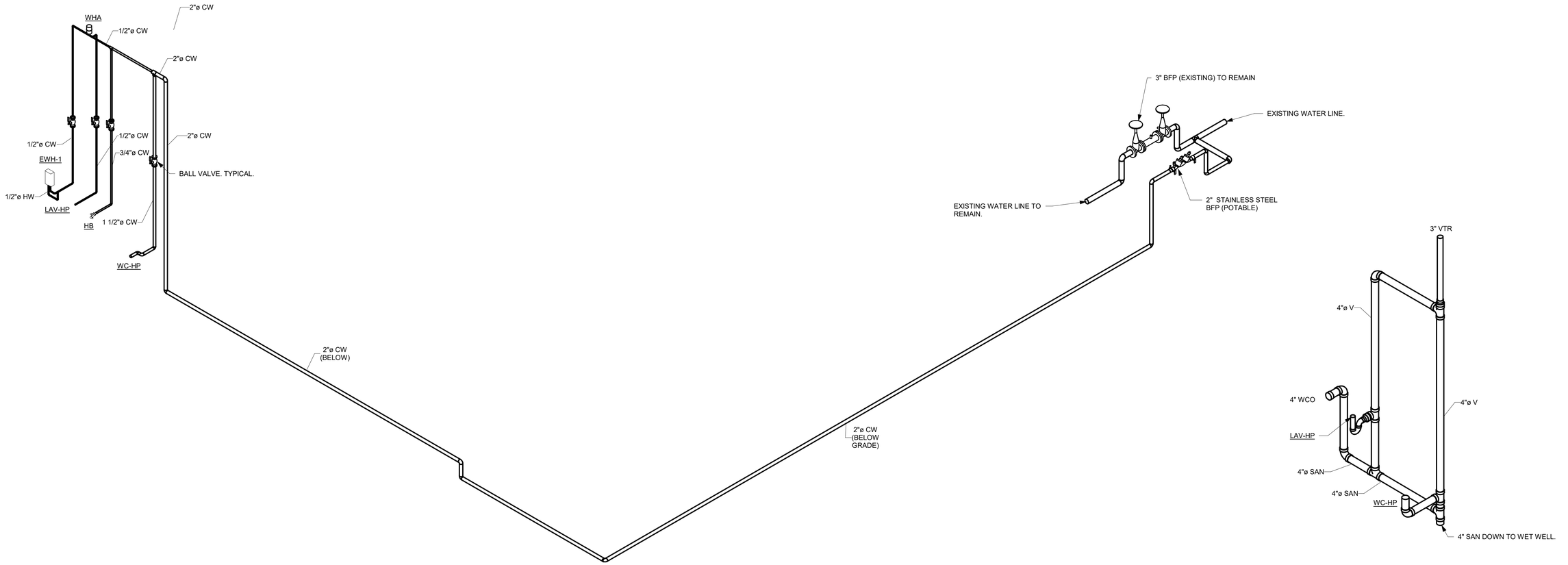


1 WATER RISER DIAGRAM
NTS




2 SANITARY RISER DIAGRAM
NTS

| REV. NO. | DATE | DRWN | CHKD | REMARKS |
|---|---|---|---|---|
| | | | | |

DESIGNED BY: J. MEINIG
DRAWN BY: A. STUART
SHEET CHK'D BY: P. POULIOT
CROSS CHK'D BY: J. GOLDMAN
APPROVED BY: J. MEINIG
DATE: JANUARY 2020

CDM Smith
4651 Salisbury Road, Suite 420
Jacksonville, FL 32256
Tel: (904) 731-7109
FL COA No. EB-0000020

JEA

WILSON BLVD. (180-45) AND 118th ST. (180-47)
MASTER PUMP STATION IMPROVEMENTS

WILSON BLVD.
RISER DIAGRAMS

PROJECT NO. 6103-234169
FILE NAME: PWZ000PS.RVT

SHEET NO.
P-4

60% SUBMITTAL - NOT FOR CONSTRUCTION

© 2019 CDM SMITH ALL RIGHTS RESERVED.
REUSE OF DOCUMENTS: THESE DOCUMENTS AND DESIGNS PROVIDED BY PROFESSIONAL SERVICE, INCORPORATED HEREIN, ARE THE PROPERTY OF CDM SMITH AND ARE NOT TO BE USED, IN WHOLE OR PART, FOR ANY OTHER PROJECT WITHOUT THE WRITTEN AUTHORIZATION OF CDM SMITH.

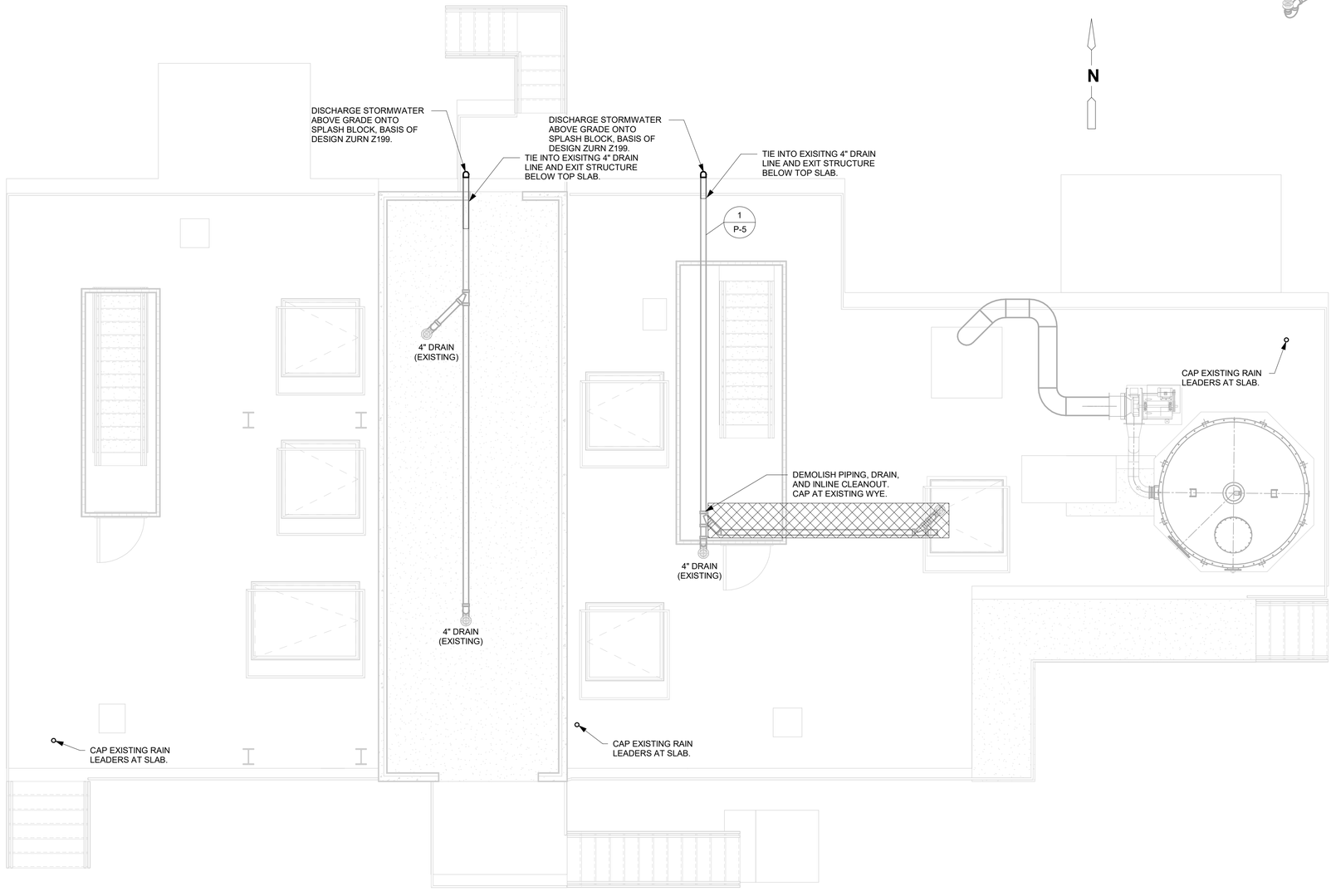


118TH ST. UPPER LEVEL PLUMBING MODIFICATION PLAN
1/4" = 1'-0"

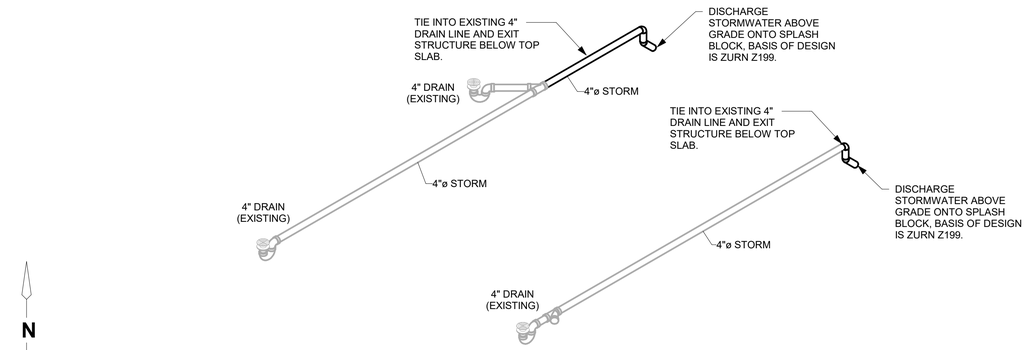


1 STORMWATER DRAIN RISER DIAGRAM

DATE:
JOSHUA H. MEINIG
PE NO. 72454

| REV. NO. | DATE | DRWN | CHKD | REMARKS |
|---|---|---|---|---|

DESIGNED BY: J. MEINIG
DRAWN BY: A. STUART
SHEET CHK'D BY: P. POULIOT
CROSS CHK'D BY: J. GOLDMAN
APPROVED BY: J. MEINIG
DATE: FEBRUARY 2020

CDM Smith
4651 Salisbury Road, Suite 420
Jacksonville, FL 32256
Tel: (904) 731-7109
FL COA No. EB-0000020

JEA

WILSON BLVD. (180-45) AND 118th ST. (180-47)
MASTER PUMP STATION IMPROVEMENTS

118TH ST.
UPPER LEVEL PLUMBING MODIFICATION PLAN

PROJECT NO. 6103-234169
FILE NAME: HWZ0001PS.RVT

SHEET NO.
P-5

60% SUBMITTAL - NOT FOR CONSTRUCTION

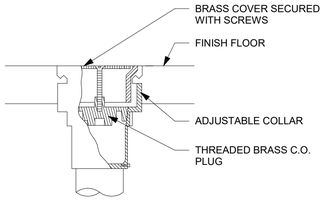


FLOOR CLEANOUT (FCO)

**A DETAIL** – NTS

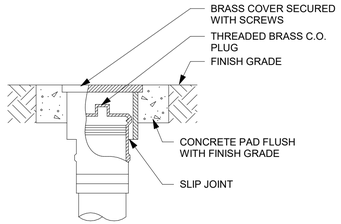


EXTERIOR CLEANOUT (ECO)

**B DETAIL** – NTS

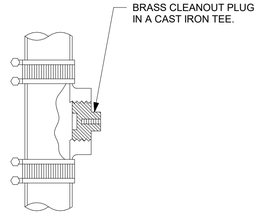


WALL CLEANOUT (WCO)

**C DETAIL** – NTS

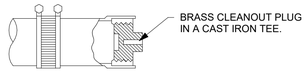


INLINE CLEANOUT (ICO)

**D DETAIL** – NTS

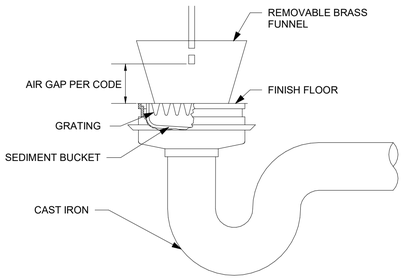


EQUIPMENT FLOOR DRAIN (ED)

**E DETAIL** – NTS

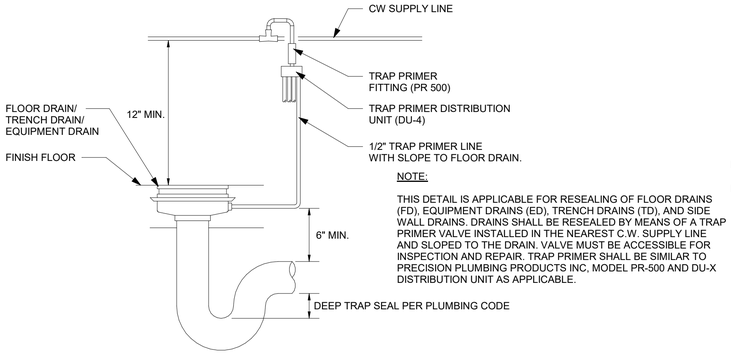


NOTE:

THIS DETAIL IS APPLICABLE FOR RESEALING OF FLOOR DRAINS (FD), EQUIPMENT DRAINS (ED), TRENCH DRAINS (TD), AND SIDE WALL DRAINS. DRAINS SHALL BE RESEALED BY MEANS OF A TRAP PRIMER VALVE INSTALLED IN THE NEAREST C.W. SUPPLY LINE AND SLOPED TO THE DRAIN. VALVE MUST BE ACCESSIBLE FOR INSPECTION AND REPAIR. TRAP PRIMER SHALL BE SIMILAR TO PRECISION PLUMBING PRODUCTS INC, MODEL PR-500 AND DU-X DISTRIBUTION UNIT AS APPLICABLE.

TRAP PRIMER RESEAL CONNECTION DIAGRAM (TP-1)

**F DETAIL** – NTS

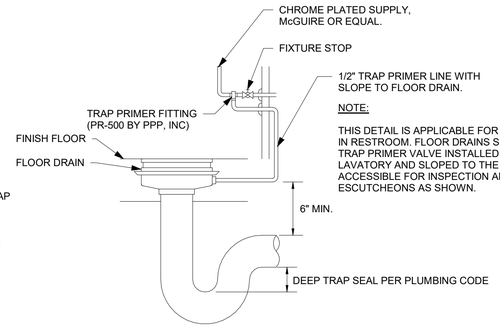


NOTE:

THIS DETAIL IS APPLICABLE FOR RESEALING OF FLOOR DRAINS (FD) IN RESTROOM. FLOOR DRAINS SHALL BE RESEALED BY MEANS OF A TRAP PRIMER VALVE INSTALLED IN THE C.W. SUPPLY LINE OF THE LAVATORY AND SLOPED TO THE FLOOR DRAIN. VALVE MUST BE ACCESSIBLE FOR INSPECTION AND REPAIR. PROVIDE ESCUTCHEONS AS SHOWN.

TRAP PRIMER RESEAL CONNECTION DIAGRAM (TP-2)

**G DETAIL** – NTS




COLORS: BACKGROUND SHALL BE OSHA SAFETY YELLOW, LETTERS SHALL BE RECESSED BLACK

NOTES:
1. FURNISH & INSTALL THE ABOVE SIGN ABOVE ALL (EXISTING & NEW) NON-POTABLE WATER HOSE BIBBS, WALL HYDRANTS, AND WASH HOSE STATIONS. ATTATCH THE SIGN TO THE STRUCTURE, GUARDRAIL OR POST WITH STAINLESS STEEL HARDWARE & MOUNTING BRACKET.

2. FURNISH ONE SIGN & RECEIVE APPROVAL FROM OWNER PRIOR TO ORDERING REMAINDER OF SIGNS.

CAUTION SIGN

**H DETAIL** – NTS

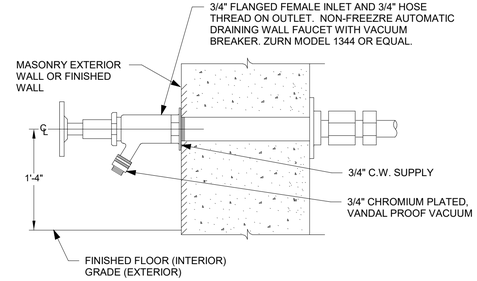


HOSE BIBB MOUNTING

**I DETAIL** – NTS

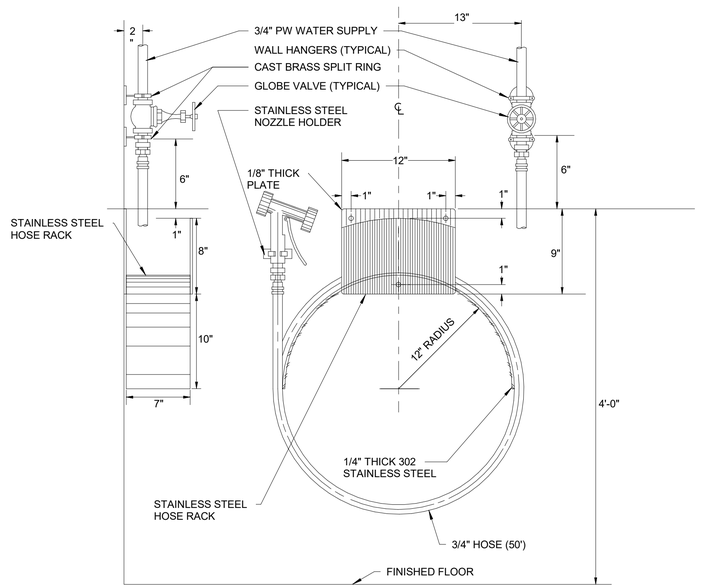


WASH HOSE STATION (WHS)

**J DETAIL** – NTS

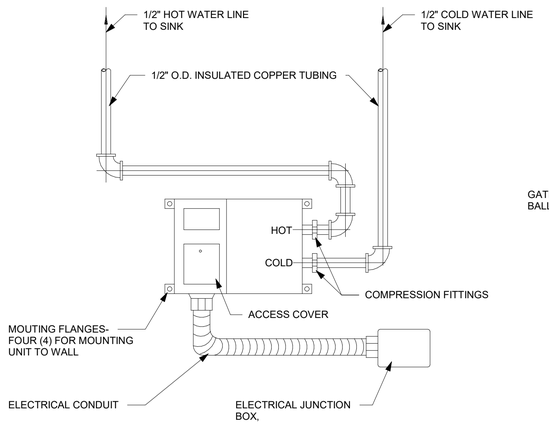


NOTE:
TANKLESS WATER HEATER MOUNTED TO WALL BELOW SINK.

TANKLESS WATER HEATER

**K DETAIL** – 12" = 1'-0"

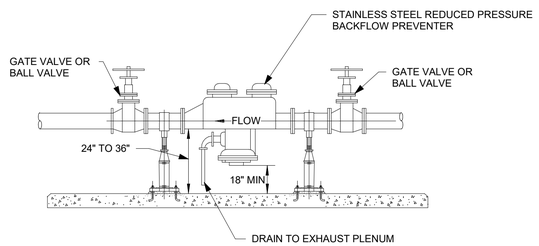


REDUCED PRESSURE BACKFLOW PREVENTER

**L DETAIL** – NTS

DATE:
JOSHUA H. MEINIG
PE NO. 72454

| REV. NO. | DATE | DRWN | CHKD | REMARKS |
|---|---|---|---|---|
| | | | | |

DESIGNED BY: J. MEINIG
DRAWN BY: A. STUART
SHEET CHK'D BY: P. POULIOT
CROSS CHK'D BY: J. GOLDMAN
APPROVED BY: J. MEINIG
DATE: JANUARY 2020

CDM Smith
4651 Salisbury Road, Suite 420
Jacksonville, FL 32256
Tel: (904) 731-7109
FL COA No. EB-0000020

JEA

WILSON BLVD. (180-45) AND 118th ST. (180-47)
MASTER PUMP STATION IMPROVEMENTS

PLUMBING DETAILS

PROJECT NO. 6103-234169
FILE NAME: PWZ002PS.RVT

SHEET NO.
PD-1

60% SUBMITTAL - NOT FOR CONSTRUCTION

© 2019 CDM SMITH ALL RIGHTS RESERVED.
REUSE OF DOCUMENTS: THESE DOCUMENTS AND DESIGNS PROVIDED BY PROFESSIONAL SERVICE, INCORPORATED HEREIN, ARE THE PROPERTY OF CDM SMITH AND ARE NOT TO BE USED IN WHOLE OR PART, FOR ANY OTHER PROJECT WITHOUT THE WRITTEN AUTHORIZATION OF CDM SMITH.

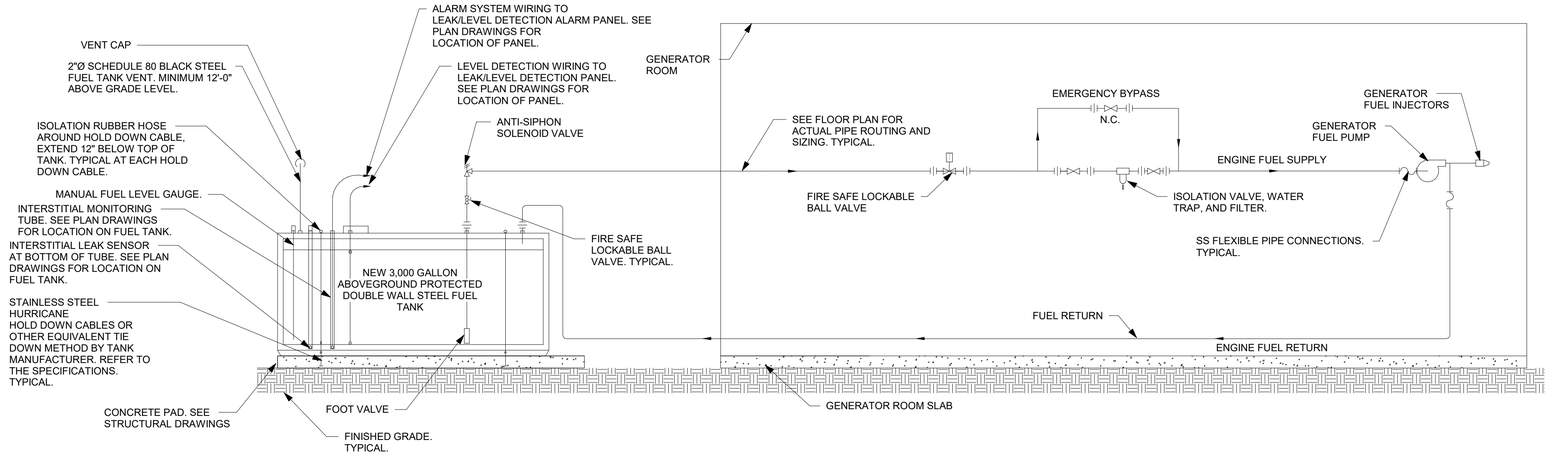


AG TANK FUEL
PIPING SCHEMATIC

**A DETAIL**
NTS

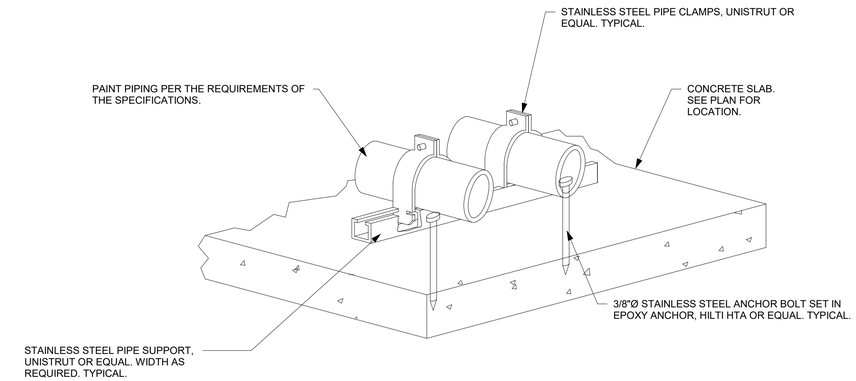


FUEL PIPING
MOUNTING DETAIL

**B DETAIL**
NTS

DATE:
JOSHUA H. MEINIG
PE NO. 72454

| REV. NO. | DATE | DRWN | CHKD | REMARKS |
|---|---|---|---|---|
| | | | | |

DESIGNED BY: J. MEINIG
DRAWN BY: A. STUART
SHEET CHK'D BY: P. POULIOT
CROSS CHK'D BY: J. GOLDMAN
APPROVED BY: J. MEINIG
DATE: JANUARY 2020

CDM Smith
4651 Salisbury Road, Suite 420
Jacksonville, FL 32256
Tel: (904) 731-7109
FL COA No. EB-0000020

JEA

WILSON BLVD. (180-45) AND 118th ST. (180-47)
MASTER PUMP STATION IMPROVEMENTS

FUEL SYSTEM DETAILS

PROJECT NO. 6103-234169
FILE NAME: PWZ002PS.RVT

SHEET NO.
PD-2

60% SUBMITTAL - NOT FOR CONSTRUCTION

© 2019 CDM SMITH ALL RIGHTS RESERVED.
REUSE OF DOCUMENTS: THESE DOCUMENTS AND DESIGNS PROVIDED BY PROFESSIONAL SERVICE, INCORPORATED HEREIN, ARE THE PROPERTY OF CDM SMITH AND ARE NOT TO BE USER, IN WHOLE OR PART, FOR ANY OTHER PROJECT WITHOUT THE WRITTEN AUTHORIZATION OF CDM SMITH.

| ONE LINE OR CONTROL DIAGRAM | PLAN | DESCRIPTION |
|---|---|---|
| 52 CS | —— | MEDIUM VOLTAGE DRAWOUT TYPE POWER CIRCUIT BREAKER<br>CS=CONTROL SWITCH |
| FRAME TRIP | CB | LOW VOLTAGE AIR OR MOLDED CASE CIRCUIT BREAKER, 3 POLE UNLESS OTHERWISE NOTED. |
| SIZE # AMPS TYPE * | | COMBINATION MOTOR CIRCUIT PROTECTOR AND MAGNETIC MOTOR STARTER, FULL VOLTAGE NON-REVERSING UNLESS OTHERWISE NOTED:<br>* FVR – FULL VOLTAGE REVERSING<br>RVNR – REDUCED VOLTAGE NON-REVERSING<br>RVAT – REDUCED VOLTAGE AUTOTRANSFORMER<br>RVSS – REDUCED VOLTAGE SOLID STATE<br>2S1W – TWO SPEED, ONE WINDING<br>2S2W – TWO SPEED, TWO WINDING<br>(DIAGRAMMATICALLY SHOWN, CONTRACTOR SHALL FIELD LOCATE) |
| * | | NON-FUSIBLE DISCONNECT SWITCH, 600 VOLT, 3 POLE<br>* AMPERE RATING NOTED IF OTHER THAN 30A<br>(DIAGRAMMATICALLY SHOWN, CONTRACTOR SHALL FIELD LOCATE) |
| * | F | FUSIBLE DISCONNECT SWITCH, 600 VOLT, 3 POLE,<br>* AMPERE RATING AND FUSE SIZE AS NOTED<br>* AMPERE RATING NOTED IF OTHER THAN 30A FUSE RATING<br>(DIAGRAMMATICALLY SHOWN, CONTRACTOR SHALL FIELD LOCATE) |
| | P 2 | MANUAL MOTOR STARTER WITH THERMAL OVERLOAD HEATER, 1 POLE UNLESS OTHERWISE NOTED "P" INDICATES WITH PILOT LIGHT "2" INDICATES TWO POLE<br>(DIAGRAMMATICALLY SHOWN, CONTRACTOR SHALL FIELD LOCATE) |
| | —— | DRAWOUT TYPE EQUIPMENT OR DEVICE |
| | —— | MEDIUM VOLTAGE CABLE TERMINATION |
| | —— | MEDIUM VOLTAGE AIR INTERRUPTER SWITCH |
| * | —— | MEDIUM VOLTAGE FUSED AIR INTERRUPTER SWITCH<br>* FUSE RATING |
| | —— | MEDIUM VOLTAGE FUSED MOTOR CONTROLLER |
| XFMR NO. 1 480V Δ – KVA – 120/208V 3P, 4W | T | TRANSFORMER, RATINGS AND CONNECTIONS AS NOTED. UNLESS OTHERWISE NOTED ON THE SINGLE LINE DIAGRAMS, ALL DRY TYPE TRANSFORMERS SERVICING ADMINISTRATIVE AND LABORATORY SPACES SHALL HAVE A K FACTOR OF 4. ISOLATION TRANSFORMERS SHALL HAVE A K-20 RATING |
| * A TO 5 | —— | CURRENT TRANSFORMER<br>* QUANTITY<br>A = PRIMARY AMPERES |
| * V TO 120 | —— | POTENTIAL TRANSFORMER<br>* QUANTITY<br>V = PRIMARY VOLTAGE |
| | G | GENERATOR, RATINGS AND CONNECTIONS AS NOTED |
| ATS N S 100A | —— | AUTOMATIC OR MANUAL TRANSFER SWITCH NO.1 (ATS-1), (MTS-1) "N" INDICATES NORMAL OR PREFERRED SOURCE "S" INDICATES STANDBY OR ALTERNATE SOURCE 100A INDICATES CONTINUOUS CURRENT RATING |
| * | * | VARIABLE SPEED DRIVE CONTROLLER<br>* D.C. = D.C. DRIVE CONTROLLER<br>SCR = SILICON CONTROLLED RECTIFIER<br>VFD = VARIABLE FREQUENCY DRIVE |
| #KW | E | UNIT HEATER – ELECTRIC HEATING COIL AND FAN<br># – RATING |
| —— | U | UNIT HEATER – GAS FIRED, STEAM OR WATER HEATING COIL AND FAN |
| 5 | M | MOTOR, NUMERAL INDICATES HORSEPOWER |
| VS VM * | —— | VOLTMETER WITH SWITCH, 3 PHASE |
| AS AM * | —— | AMMETER WITH SWITCH, 3 PHASE |

| ONE LINE OR CONTROL DIAGRAM | PLAN | DESCRIPTION |
|---|---|---|
| * | —— | METER<br>* WM – WATTMETER<br>WHM – WATTHOUR METER<br>WHDM – WATTHOUR DEMAND METER<br>WHDR – WATTHOUR DEMAND RECORDER<br>PF – POWER FACTOR METER<br>DMU – DIGITAL METERING UNIT<br><br>TRANSDUCER<br>AX – CURRENT TRANSDUCER<br>WX – WATT TRANSDUCER<br>WHX – WATTHOUR TRANSDUCER |
| * | * | RELAY, NO. AS INDICATED<br>25 – SYNCHRONISM CHECK RELAY<br>27 – UNDERVOLTAGE RELAY<br>32 – DIRECTIONAL POWER RELAY<br>38 – BEARING PROTECTIVE DEVICE<br>40 – LOSS OF EXCITATION RELAY<br>42 – RUNNING CONTACTOR/PILOT RELAY<br>46 – REVERSE PHASE/PHASE BALANCE/CURRENT RELAY<br>47 – PHASE SEQUENCE VOLTAGE RELAY<br>49 – MACHINE OR TRANSFORMER THERMAL RELAY<br>50/51 – INSTANTANEOUS/TIME OVERCURRENT RELAY<br>50G – INSTANTANEOUS GROUND<br>51 – TIME OVERCURRENT RELAY<br>51G – TIME OVERCURRENT RELAY, GROUNDING RESISTOR TYPE<br>51N – TIME OVERCURRENT RELAY, RESIDUAL TYPE<br>51V – TIME OVERCURRENT RELAY WITH VOLTAGE RESTRAINT<br>51X – AUXILIARY RELAY (TRIPS CB AND ALARMS)<br>59 – OVERVOLTAGE RELAY<br>60 – NEGATIVE SEQUENCE VOLTAGE RELAY<br>62 – TIME DELAY RELAY<br>63 – OVERPRESSURE RELAY<br>64 – GENERATOR FIELD GROUND RELAY<br>67 – AC DIRECTIONAL OVERCURRENT RELAY<br>74 – ALARM LATCHING RELAY<br>83 – AUTOMATIC SELECTIVE CONTROL OR TRANSFER RELAY<br>86 – LOCKING-OUT RELAY<br>87 – DIFFERENTIAL PROTECTIVE RELAY<br>B – SUFFIX INDICATES "BUS"<br>G – SUFFIX INDICATES "GENERATOR"<br>GF – GROUND FAULT<br>ST – SHUNT TRIP<br>T – SUFFIX INDICATES "TRANSFORMER"<br>X – SUFFIX INDICATES "AUXILIARY" |
| * | —— | SPECIAL CAPACITOR<br>* SC – SURGE CAPACITOR<br>PF – POWER FACTOR CORRECTION CAPACITOR |
| * | —— | TUNED POWER FACTOR CORRECTION CAPACITOR |
| | —— | PUSHBUTTON, MOMENTARY CONTACT, SPRING RETURN, NORMALLY CLOSED |
| | —— | PUSHBUTTON, MOMENTARY CONTACT, SPRING RETURN, NORMALLY OPEN |
| | ES | EMERGENCY STOP PUSHBUTTON WITH RED MUSHROOM HEAD OPERATOR (MAINTAINED CONTACT) |
| STOP START | PBL | START-STOP PUSHBUTTON CONTROL STATION (MOMENTARY CONTACT) WITH LOCKOUT DEVICE ON STOP |
| | PBM | START-STOP PUSHBUTTON CONTROL STATION, MAINTAINED CONTACT WITH LOCKOUT DEVICE ON STOP |
| OFF ON | S/S | OFF/ON SELECTOR SWITCH |
| L R (XO) (OX) | LR | LOCAL/REMOTE SELECTOR SWITCH |
| A B C* (XOO) (OXO) (OOX) | * | 3 POSITION SELECTOR SWITCH, MAINTAINED CONTACT<br>O-OPEN X-CLOSED<br>POSITION \| TOP CONTACT \| MIDDLE CONTACT \| BOTTOM CONTACT<br>A \| X \| O \| O<br>B \| O \| X \| O<br>C \| O \| O \| X<br><br>NAMEPLATE (A/B/C)<br>HOA – HAND/OFF/AUTO<br>HOR – HAND/OFF/REMOTE<br>LOR – LOCAL/OFF/REMOTE<br>RSL – RAISE/STOP/LOWER<br>TOA – TEST/OFF/AUTO |
| GD/VF # | GD/VF # | GAS DETECTOR / VENTILATION FAILURE ALARM<br># INDICATES TYPE OF UNIT<br>1=MASTER, 2=REMOTE |
| 42 # | —— | MOTOR STARTER COIL, NUMBER AS INDICATED TO DENOTE INTERLOCKING ONLY |
| CR # | —— | CONTROL RELAY COIL, NUMBER AS INDICATED |

| ONE LINE OR CONTROL DIAGRAM | PLAN | DESCRIPTION |
|---|---|---|
| * | —— | PILOT LIGHT, COLOR AS NOTED<br>* R – RED<br>G – GREEN<br>B – BLUE<br>W – WHITE<br>A – AMBER |
| * | —— | PILOT LIGHT, PUSH-TO-TEST TYPE, COLOR AS NOTED ABOVE. |
| * # RANGE SETPOINT | | TIME DELAY RELAY<br>RANGE AS NOTED<br>SETPOINT AS NOTED<br># NUMBER AS INDICATED<br>* TDE – TIME DELAY AFTER ENERGIZATION ON DELAY<br>TDD – TIME DELAY AFTER DE-ENERGIZATION OFF DELAY<br><br>NOTC – NORMALLY OPEN, TIMED CLOSING WHEN ENERGIZED<br><br>NCTO – NORMALLY CLOSED, TIMED OPENING WHEN ENERGIZED<br><br>NOTO – NORMALLY OPEN, TIMED OPENING WHEN DE-ENERGIZED<br><br>NCTC – NORMALLY CLOSED, TIMED CLOSING WHEN DE-ENERGIZED |
| * NOTC | | |
| NCTO | | |
| NOTO | | |
| NCTC | | |
| —— | * – ## | FIELD INSTRUMENT, TAG NO. AS INDICATED<br>* INDICATES INSTRUMENT TYPE DEFINED ON LOOP SHEETS OR P & ID<br>## INDICATES LOOP NO. |
| | LS OR ■ | LIQUID LEVEL (FLOAT) SWITCH<br><br>NORMALLY OPEN, CLOSES ON RISING LEVEL<br><br>NORMALLY CLOSED, OPENS ON RISING LEVEL |
| | PS OR ■ | PRESSURE OR VACUUM SWITCH<br><br>NORMALLY OPEN, CLOSES ON RISING PRESSURE<br><br>NORMALLY OPEN, CLOSES ON DROPPING PRESSURE<br><br>NORMALLY CLOSED, OPENS ON RISING PRESSURE<br><br>NORMALLY CLOSED, OPENS ON DROPPING PRESSURE |
| | TS OR T OR ■ | TEMPERATURE SWITCH OR THERMOSTAT<br><br>NORMALLY OPEN, CLOSES ON RISING TEMPERATURE<br><br>NORMALLY OPEN, CLOSES ON DROPPING TEMPERATURE<br><br>NORMALLY CLOSED, OPENS ON RISING TEMPERATURE<br><br>NORMALLY CLOSED, OPENS ON DROPPING TEMPERATURE |
| | FS OR ■ | FLOW SWITCH (AIR, WATER, ETC.)<br><br>NORMALLY OPEN, CLOSES ON INCREASED FLOW<br><br>NORMALLY CLOSED, OPENS ON INCREASED FLOW |
| | ZS OR ■ | POSITION (LIMIT) SWITCH<br><br>NORMALLY OPEN<br><br>NORMALLY OPEN – HELD CLOSED<br><br>NORMALLY CLOSED<br><br>NORMALLY CLOSED – HELD OPEN |
| | WS OR ■ | TORQUE SWITCH<br><br>NORMALLY OPEN, CLOSES ON HIGH TORQUE<br><br>NORMALLY CLOSED, OPENS ON HIGH TORQUE |
| # | —— | UTILIZED IN CONJUNCTION WITH OTHER CONTROL SCHEMATIC SYMBOLS TO DEPICT THE PHYSICAL LOCATION OF THE DEVICE<br># REPRESENTS LOCATION<br>SEE LOCATION LEGEND ON DRAWING |
| | —— | CONDUCTORS OR CONDUITS CROSSING PATHS BUT NOT CONNECTED |
| | —— | CONDUCTORS ELECTRICALLY CONNECTED |
| | S | SOLENOID VALVE |

| ONE LINE OR CONTROL DIAGRAM | PLAN | DESCRIPTION |
|---|---|---|
| LA | —— | LIGHTNING ARRESTER |
| | | GROUND OR GROUND ROD |
| 30A | —— | FUSE, AMPERE RATING AS NOTED |
| | HTR | STRIP HEATER OR HEATING ELEMENT |
| | —— | INDUCTOR |
| TG | TG | TACHOMETER GENERATOR |
| | —— | CONTACT, NORMALLY OPEN (NO) |
| | —— | CONTACT, NORMALLY CLOSED (NC) |
| | —— | OVERLOAD RELAY HEATER |
| * | —— | *<br>K = KEY INTERLOCK<br>E = ELECTRICAL INTERLOCK |
| TB | —— | TERMINAL OR TEST BLOCK |
| RTD | —— | RESISTANCE TEMPERATURE DETECTOR |
| VE OR VE | —— | VIBRATION DETECTOR |
| DM | DM | DAMPER MOTOR |
| ETM | —— | ELAPSED TIME METER |
| M | M | MOTOR OPERATED VALVE OR GATE |
| | —— | INDICATES LIMITS OF ELECTRICAL EQUIPMENT OR WIRING ENCLOSURE |

EXISTING WORK | NEW WORK | FUTURE EXPANSION

## EXISTING, NEW OR FUTURE CONDITION DESIGNATION

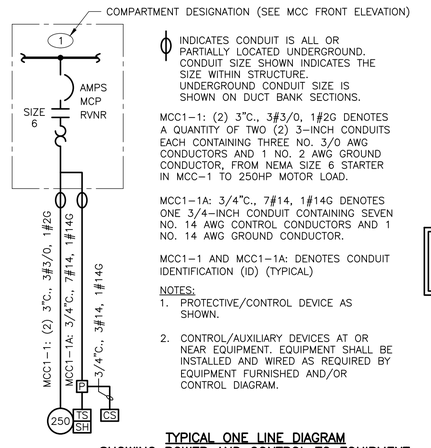


INDICATES CONDUIT IS ALL OR PARTIALLY LOCATED UNDERGROUND. CONDUIT SIZE SHOWN INDICATES THE SIZE WITHIN STRUCTURE. UNDERGROUND CONDUIT SIZE IS SHOWN ON DUCT BANK SECTIONS.

MCC1-1: (2) 3"C., 3#3/0, 1#2G DENOTES A QUANTITY OF TWO (2) 3-INCH CONDUITS EACH CONTAINING THREE NO. 3/0 AWG CONDUCTORS AND 1 NO. 2 AWG GROUND CONDUCTOR, FROM NEMA SIZE 6 STARTER IN MCC-1 TO 250HP MOTOR LOAD.

MCC1-1A: 3/4"C., 7#14, 1#14G DENOTES ONE 3/4-INCH CONDUIT CONTAINING SEVEN NO. 14 AWG CONTROL CONDUCTORS AND 1 NO. 14 AWG GROUND CONDUCTOR.

MCC1-1 AND MCC1-1A: DENOTES CONDUIT IDENTIFICATION (ID) (TYPICAL)

NOTES:
1. PROTECTIVE/CONTROL DEVICE AS SHOWN.
2. CONTROL/AUXILIARY DEVICES AT OR NEAR EQUIPMENT. EQUIPMENT SHALL BE INSTALLED AND WIRED AS REQUIRED BY EQUIPMENT FURNISHED AND/OR CONTROL DIAGRAM.

## TYPICAL ONE LINE DIAGRAM SHOWING POWER AND CONTROL TO EQUIPMENT

**GENERAL NOTE**
THIS IS A STANDARD LEGEND. SOME SYMBOLS MAY NOT APPEAR ON THE DRAWINGS.

## NOTES:

1. IN GENERAL CONDUIT ROUTING FOR EQUIPMENT AND DEVICES IS NOT SHOWN ON THE PLANS. THE CONTRACTOR SHALL BE RESPONSIBLE FOR ROUTING ALL CONDUITS WHICH SHALL INCLUDE CONDUITS SHOWN ON ONE-LINE AND RISER DIAGRAMS AND HOME-RUNS SHOWN ON PLAN DRAWINGS. REFER TO SPECIFICATIONS FOR MATERIALS AND INSTALLATION REQUIREMENTS.
2. THE WIRING DIAGRAMS, QUANTITY AND SIZE OF WIRES AND CONDUITS REPRESENT A SUGGESTED ARRANGEMENT BASED UPON SELECTED STANDARD COMPONENTS OF ELECTRICAL EQUIPMENT. MODIFICATIONS ACCEPTABLE TO THE ENGINEER MAY BE MADE BY THE CONTRACTOR TO ACCOMMODATE EQUIPMENT ACTUALLY PURCHASED. THE BASIC SEQUENCE AND METHOD OF CONTROL MUST BE MAINTAINED AS INDICATED ON THE DRAWINGS AND/OR SPECIFICATIONS.
3. SWITCHGEAR AND MOTOR CONTROL CENTER COMPARTMENT DESIGNATIONS AS INDICATED BELOW:
   - BLANK: NOT INTENDED FOR USE. PLATE ONLY
   - SPACE: EQUIPPED WITH REQUIRED BUS AND HARDWARE FOR THE FUTURE ADDITION OF BREAKERS AND/OR STARTERS WITHIN THE SIZE AND RANGE SHOWN
   - SPARE: CONTAINS A COMPLETELY INSTALLED BREAKER AND/OR STARTER OF SIZE AND TYPE INDICATED FOR FUTURE USE.
4. INTERPRETATION OF ELECTRICAL DRAWINGS: CIRCUIT IDENTIFICATION, ROUTING, AND SIZES OF CONDUITS AND WIRES ARE SHOWN ON THE FOLLOWING DRAWINGS:

A. ONE LINE POWER DIAGRAMS: POWER, CONTROL AND SIGNAL WIRING REQUIREMENTS FOR ELECTRICAL DISTRIBUTION EQUIPMENT AND UTILIZATION EQUIPMENT POWERED FROM SWITCHGEAR, SWITCHBOARDS, MOTOR CONTROL CENTERS AND MAJOR POWER DISTRIBUTION PANELBOARDS ARE TYPICALLY SHOWN ON THE ONE LINE DIAGRAMS. THE PARAMETERS IDENTIFIED ON THE ONE LINE DIAGRAMS ARE: CIRCUIT IDENTIFICATION, CIRCUIT ORIGIN AND DESTINATION, CONDUIT SIZE, WIRE SIZE AND QUANTITY FOR COMPLETE CIRCUIT LENGTH, AND AUXILIARY DEVICES ASSOCIATED WITH THE CONTROL/PROTECTION OF THE POWERED EQUIPMENT, AND SIZE OF THE GROUNDING ELECTRODE CONDUCTORS.

B. INSTRUMENTATION AND CONTROL RISER DIAGRAMS: POWER, CONTROL, SIGNAL AND DATA HIGHWAY WIRING REQUIREMENTS FOR INSTRUMENTS AND CONTROL DEVICES CONTROLLED/MONITORED FROM INSTRUMENTATION AND CONTROL PANELS SUCH AS RTUS, PLCS, TERMINAL CABINETS, AND REMOTE I/O PANELS ARE TYPICALLY SHOWN ON THE INSTRUMENTATION AND CONTROL ONE LINE DIAGRAMS. THE PARAMETERS IDENTIFIED ON THE ONE LINE DIAGRAMS ARE: CIRCUIT IDENTIFICATION, CIRCUIT ORIGIN AND DESTINATION, CONDUIT SIZE, WIRE SIZE, QUANTITY AND TYPE FOR COMPLETE CIRCUIT LENGTH, AND AUXILIARY DEVICES ASSOCIATED WITH THE CONTROL/PROTECTION OF THE POWERED EQUIPMENT.

C. FLOOR PLANS: FOR DETERMINING THE LENGTH OF CIRCUITS LOCATED WITHIN STRUCTURES, FLOOR PLANS SHOW THE LOCATION OF ELECTRICAL DISTRIBUTION EQUIPMENT, CONTROL PANELS, UTILIZATION EQUIPMENT, INSTRUMENTS, ANCILLARY EQUIPMENT AND DEVICES AND THE ANTICIPATED PENETRATION LOCATIONS WHERE CONDUITS EXIT/ENTER THE STRUCTURE. HOMERUNS MAY ALSO BE SHOWN FROM MISCELLANEOUS EQUIPMENT NOT SHOWN ON A ONE LINE OR RISER DIAGRAM.

D. SITE PLANS: FOR DETERMINING THE LENGTH OF CIRCUITS EXTERIOR TO STRUCTURES AND TO IDENTIFY THE SPECIFIC REQUIREMENTS OF THE UNDERGROUND CONDUITS OR DUCT BANKS, SITE PLANS SHOW THE GENERAL ROUTING OF UNDERGROUND CONDUITS AND DUCT BANKS WITH SECTIONS INDICATING THE CONDUIT SIZE, ARRANGEMENT AND CIRCUIT ROUTING.

E. NOTE THAT CONDUIT SIZE WITHIN THE STRUCTURE IS INDICATED ON ONE-LINE DIAGRAM AND UNDERGROUND SIZE IS INDICATED ON DUCT BANK SECTIONS.

| REV. NO. | DATE | DRWN | CHKD | REMARKS |
|---|---|---|---|---|
| | | | | |

DESIGNED BY: O. CRUZ
DRAWN BY: R. RUCK
SHEET CHK'D BY: X
CROSS CHK'D BY: X
APPROVED BY: S. PERRY
DATE: FEBRUARY 2020


CDM Smith
4651 Salisbury Road, Suite 420
Jacksonville, FL 32256
Tel: (904) 731-7109
FL COA No. EB-0000020


JEA

WILSON BLVD. (180-45) AND 118th ST. (180-47)
MASTER PUMP STATION IMPROVEMENTS

ELECTRICAL LEGEND I

DATE:
SPENCER J. PERRY JR
PE NO. 62587

PROJECT NO. 6103-234169
FILE NAME: E001NFLG.DWG
SHEET NO.
E-1

60% SUBMITTAL - NOT FOR CONSTRUCTION


XREFs: [CDMS_2234]
Images: []
Last saved by: RUCKRM Time: 2/14/2020 4:22:29 PM
pw:\\cdmsmith-a202-pw.bentley.com:PW_XM1\6103\234169 JEA PDB\04 Design Services NM_60ft\09 Electrical\10 CAD\E001NFLG.dwg
© 2020 CDM SMITH ALL RIGHTS RESERVED.
REUSE OF DOCUMENTS: THESE DOCUMENTS AND DESIGNS PROVIDED BY PROFESSIONAL SERVICE, INCORPORATED HEREIN, ARE THE PROPERTY OF CDM SMITH AND ARE NOT TO BE USED, IN WHOLE OR PART, FOR ANY OTHER PROJECT WITHOUT THE WRITTEN AUTHORIZATION OF CDM SMITH.

| SYMBOL | DESCRIPTION |
|---|---|
| A 3 b | LIGHTING FIXTURE<br>"A" – FIXTURE TYPE (SEE LIGHTING FIXTURE SCHEDULE)<br>"b" – CONTROLLED BY SWITCH "b"<br>"3" – CIRCUIT NUMBER |
| A 3 b | LIGHTING FIXTURE, NOTATIONS SAME AS ABOVE |
| A 3 b | WALL MOUNTED TYPE LIGHTING FIXTURE, NOTATIONS SAME AS ABOVE |
| A 3 OR A 3 | CROSS HATCH INDICATES LIGHTING FIXTURE THAT IS UNSWITCHED AND SHALL REMAIN ON AT ALL TIMES. NOTATIONS SAME AS ABOVE. |
| A 3 b OR A 3 b | SHADED AREA INDICATES LIGHTING FIXTURE THAT IS EQUIPPED WITH EMERGENCY BACKUP POWER SOURCE. NOTATIONS SAME AS ABOVE. |
| A 3 | POLE MOUNTED AREA TYPE LIGHTING FIXTURE, NOTATIONS SAME AS ABOVE |
| A 3 | POLE MOUNTED ROADWAY TYPE LIGHTING FIXTURE, NOTATIONS SAME AS ABOVE |
| EM 3 (*) | EMERGENCY LIGHTING BATTERY UNIT WITH TWO LAMP HEADS<br>"EM" – FIXTURE TYPE (SEE LIGHTING FIXTURE SCHEDULE)<br>"3" – SUPERVISORY CIRCUIT<br>* – FIXTURE TAG # |
| R-2 BU-1(*) | REMOTE EMERGENCY ADJUSTABLE WALL LIGHTING FIXTURE WITH TWO LAMP HEADS<br>"R-2" – FIXTURE TYPE (SEE LIGHTING FIXTURE SCHEDULE)<br>* – HOME RUN TO BATTERY UNIT INDICATED. CONDUIT SHALL BE 3/4" AND CONTAIN (2) NO. 12 AWG BRANCH CIRCUIT CONDUCTORS AND (1) NO. 12 AWG GROUND CONDUCTOR UNLESS OTHERWISE INDICATED. |
| A 3 | COMBINATION BATTERY UNIT AND EXIT SIGN. FILLED QUADRANT REPRESENTS FACE SIDE OF SIGN. |
| A 3 | CEILING MOUNTED EXIT SIGN, NOTATIONS SAME AS ABOVE. WHEN USED, ARROW INDICATES DIRECTION OF EGRESS. FILLED QUADRANT REPRESENTS FACE SIDE OF SIGN. (DOUBLE FACE DOUBLE CHEVRONS SHOWN) |
| A 3 | WALL MOUNTED EXIT SIGN, NOTATIONS SAME AS ABOVE. WHEN USED, ARROW INDICATES DIRECTION OF EGRESS. FILLED QUADRANT REPRESENTS FACE SIDE OF SIGN. |
| RH-3 E 3 BU-1(*) | REMOTE EMERGENCY CEILING LIGHTING FIXTURE.<br>"RH-3" – FIXTURE TYPE (SEE LIGHTING FIXTURE SCHEDULE)<br>"3" – SUPERVISORY CIRCUIT<br>* – HOME RUN TO BATTERY UNIT INDICATED. CONDUIT SHALL BE 3/4" AND CONTAIN 2 NO. 12 AWG BRANCH CIRCUIT CONDUCTORS AND 1 NO. 12 AWG GROUND CONDUCTOR UNLESS OTHERWISE INDICATED. |
| | HOME RUN TO DESIGNATED EQUIPMENT. BRANCH CIRCUIT CONDUIT WITH 2 NO. 12 AWG BRANCH CIRCUIT CONDUCTORS AND 1 NO. 12 AWG GROUND CONDUCTOR UNLESS OTHERWISE NOTED. NUMBER OF ARROWS INDICATE NUMBER OF CIRCUITS. FOR MINIMUM SIZE CONDUIT PERMITTED REFER TO THE SPECIFICATIONS. |
| | CONDUIT CONCEALED IN WALL, IN SLAB ABOVE, OR ABOVE CEILING. |
| | CONDUIT CONCEALED IN OR BELOW FLOOR OR UNDERGROUND. |
| | CONDUIT RUN EXPOSED. RUN PARALLEL OR PERPENDICULAR TO STRUCTURE OR WALL. |
| | 'X' INDICATES EXPLOSION PROOF CONDUIT SEAL FITTING. |
| | CONCRETE ENCASED DUCTBANK. WIDTH VARIES, SEE DUCTBANK SECTION/DETAILS FOR REQUIREMENTS AND WIDTH |
| | CONDUIT STUBBED OUT AND CAPPED |
| (2) 3"C., 3#3/0, 1#2G | DENOTES A QUANTITY OF TWO (2) 3-INCH CONDUITS EACH CONTAINING THREE NO. 3/0 AWG CONDUCTORS AND 1 NO. 2 AWG GROUND CONDUCTOR. |
| 2-2/C#16 SH | DENOTES A QUANTITY OF TWO INSTRUMENT CABLES. EACH CABLE TO CONSIST OF TWO NO. 16 AWG CONDUCTORS TWISTED TOGETHER AND COVERED WITH A METALLIC SHIELD AND AN OVERALL PROTECTIVE JACKET. REFER TO THE SPECIFICATIONS FOR THE EXACT CABLE TO BE PROVIDED. |
| 2-3/C#16 SH | SAME AS ABOVE EXCEPT CABLE TO CONSIST OF THREE NO. 16 AWG CONDUCTORS TWISTED, SHIELDED AND COVERED WITH AN OVERALL PROTECTIVE JACKET. REFER TO THE SPECIFICATIONS FOR THE EXACT CABLE TO BE PROVIDED. |
| (3) 4"C. | THREE 4-INCH CONDUITS |
| | FLEXIBLE METAL CONDUIT "WHIP" (3/4"C., 2#12, 1#12G UNLESS OTHERWISE NOTED) FOR LIQUID TIGHT MOTOR CONNECTIONS |
| | 'X' INDICATES CONDUIT SEAL FITTING IN OTHER THAN CODE REQUIRED LOCATIONS. |
| | INDICATES MOTOR STARTER AND/OR MOTOR CONTROL EQUIPMENT WITHIN THE ENCLOSURE. |

| SYMBOL | DESCRIPTION |
|---|---|
| $a | SINGLE POLE SWITCH "a" INDICATES FIXTURES CONTROLLED. |
| $a 2 | DOUBLE POLE SWITCH "a" INDICATES FIXTURES CONTROLLED. |
| $c 3 | THREE WAY SWITCH "c" INDICATES FIXTURES CONTROLLED. |
| $a 4 | FOUR WAY SWITCH "a" INDICATES FIXTURES CONTROLLED. |
| $a D | DIMMER SWITCH "a" INDICATES FIXTURES CONTROLLED |
| $OS | SINGLE POLE SWITCH<br>"OS" INDICATES A PASSIVE INFRARED OCCUPANCY SENSOR |
| $OS 2 | DOUBLE POLE SWITCH<br>"OS" INDICATES PROGRAMMABLE OCCUPANCY SENSOR CAPABLE OF INBOARD/OUTBOARD SWITCHING |
| $DT | SINGLE POLE SWITCH<br>"DT" INDICATES DUAL TECHNOLOGY PROGRAMMABLE OCCUPANCY SENSOR CAPABLE OF SENSING MOTION AND SOUND |
| C 3 | LIGHTING CONTACTOR WITH NUMBER OF POLES AS INDICATED |
| TM | TIME SWITCH |
| | PUSH BUTTON STATION |
| TYPE A | INDICATES ALL LIGHTING FIXTURES WITHIN THE ROOM OR AREA IN WHICH THIS NOTATION APPEARS SHALL BE TYPE "A" UNLESS OTHERWISE NOTED. SEE LIGHTING FIXTURE SCHEDULE FOR TYPES |
| | LIGHTING PANELBOARD (LP-#)<br>SHOWN ON PLAN PER ACTUAL PANEL DIMENSIONS |
| | POWER PANELBOARD (PP-#) OR DISTRIBUTION PANELBOARD (DP-#)<br>SHOWN ON PLAN PER ACTUAL PANEL DIMENSIONS |
| | LIGHTING CONTACTOR PANELBOARD (LCP-#)<br>SHOWN ON PLAN PER ACTUAL PANEL DIMENSIONS |
| * 4 | DUPLEX RECEPTACLE, 20A, 120V, 2P, 3W<br>* GFCI – GROUND FAULT CIRCUIT INTERRUPTER TYPE<br>WP – WEATHERPROOF<br>XP – EXPLOSION PROOF<br>T – TRANSIENT VOLTAGE SURGE SUPPRESSOR<br>IC – ISOLATED GROUND<br>4 – CIRCUIT NUMBER |
| * 4 | DUPLEX RECEPTACLE, 20A, 120V, 2P, 3W<br>MOUNTED ABOVE COUNTER-TOP OR 42" AFF<br>* NOTATIONS SAME AS ABOVE |
| * 60 3 4W | SPECIAL PURPOSE RECEPTACLE<br>* – VOLT RATING<br>"3" – NUMBER OF POLES<br>"60" – AMPERE RATING<br>"4W" – 4 WIRES IN ADDITION TO GROUND |
| | MULTI-OUTLET ASSEMBLY, SYMBOL DENOTES RECEPTACLE TYPE |
| | FLUSH FLOOR OUTLET BOX WITH TYPE OUTLET INDICATED |
| | UNDER FLOOR DUCT SYSTEM WITH TYPE OUTLETS INDICATED |
| | THREE CELL UNDER FLOOR DUCT SYSTEM JUNCTION BOX |
| J OR J | JUNCTION BOX |
| P | PULL BOX |
| TC | TERMINAL CABINET |
| OS | OCCUPANCY SENSOR |
| PC | PHOTOCELL |
| ESA | EMERGENCY EYEWASH/SHOWER ALARM STATION WITH FLOW SWITCH(ES) |
| | INDICATED EQUIPMENT AND MATERIALS TO BE DEMOLISHED |
| DUST | INDICATES THAT ALL ELECTRICAL EQUIPMENT AND MATERIALS INSTALLED WITHIN THE ROOM OR AREA IN WHICH THIS NOTATION APPEARS SHALL BE OF NEMA 12 CONSTRUCTION (OR GASKETED AND SUITABLE FOR USE IN A WET LOCATION WHERE NEMA STANDARDS DO NOT APPLY) UNLESS OTHERWISE NOTED. |
| DAMP OR WET | INDICATES THAT ALL ELECTRICAL EQUIPMENT AND MATERIALS INSTALLED WITHIN THE ROOM OR AREA IN WHICH THIS NOTATION APPEARS SHALL BE OF NEMA 4X CONSTRUCTION (OR GASKETED AND SUITABLE FOR USE IN A WET LOCATION WHERE NEMA STANDARDS DO NOT APPLY) UNLESS OTHERWISE NOTED. |
| CORROSIVE | INDICATES THAT ALL ELECTRICAL EQUIPMENT AND MATERIALS INSTALLED WITHIN THE ROOM OR AREA IN WHICH THIS NOTATION APPEARS SHALL BE OF NEMA 4X CONSTRUCTION (OR CORROSION RESISTANT CONSTRUCTION SUITABLE FOR USE IN A WET LOCATION WHERE NEMA STANDARDS DO NOT APPLY) UNLESS OTHERWISE NOTED. |
| CLASS I, DIV. 1 GROUP D | INDICATES THAT ALL ELECTRICAL EQUIPMENT AND MATERIALS INSTALLED WITHIN THE ROOM OR AREA IN WHICH THIS NOTATION APPEARS SHALL CONFORM TO N.E.C. REQUIREMENTS FOR THE HAZARDOUS AREA CLASSIFICATION SHOWN. |

| SYMBOL | DESCRIPTION |
|---|---|
| | GROUND SYSTEM GRID OR LOOP, 36" BELOW FINISHED GRADE UNLESS OTHERWISE NOTED. |
| | EXOTHERMIC WELD CONNECTION |
| | 3/4" x 10'-0" GROUND ROD. UNLESS SPECIFIED OTHERWISE. |
| | GROUND ROD TEST WELL STATION<br>(SEE DETAIL SHEET FOR REQUIREMENTS) |
| | COMMUNICATION SYSTEMS |
| K | TELEPHONE OUTLET FOR DESK TYPE HANDSET<br>K = KEY SYSTEM |
| K | TELEPHONE OUTLET FOR WALL TYPE HANDSET (MOUNT UP 4'-6")<br>K = KEY SYSTEM |
| | PAGE/PARTY TELEPHONE OUTLET FOR DESK TYPE HANDSET |
| | PAGE/PARTY TELEPHONE OUTLET FOR WALL TYPE HANDSET, MOUNT UP 4'-6" |
| S H W | PAGING SPEAKER, WALL MOUNTED<br>H = HORN TYPE<br>W = WIDE ANGLE TYPE |
| S W | PAGING SPEAKER, WALL MOUNTED, BI-DIRECTIONAL, HORN TYPE<br>W = WIDE ANGLE TYPE |
| S | PAGING SPEAKER, FLUSH MOUNTED CEILING TYPE |
| S | PAGING SPEAKER, SURFACE MOUNTED CEILING TYPE |
| VC | REMOTE WALL MOUNTED VOLUME CONTROL FOR CEILING SPEAKER, MOUNT UP 5'-0" |
| A | PAGING SPEAKER AMPLIFIER ASSEMBLY |
| TM | TELEPHONE CABINET OR BACKBOARD AS NOTED |
| P OR C | "C" – DATA INPUT/OUTPUT CABLE OUTLET<br>"P" – PROCESS COMPUTER SYSTEM (CAT6 RJ-45 JACK) |
| GD/VF # | GAS DETECTOR/VENTILATION FAILURE ALARM,<br># INDICATES TYPE OF UNIT.<br>1 = MASTER, 2 = REMOTE |
| GB | GAS DETECTION/VENTILATION FAILURE WEATHERPROOF DUAL-LITE BEACON<br>MOUNT TOP OF DEVICE UP 6'-8" A.F.F. |
| 15 G | GAS DETECTION/VENTILATION FAILURE HORN/STROBE<br>MOUNT TOP OF DEVICE UP 6'-8" A.F.F. |
| G | GAS DETECTION/VENTILATION FAILURE HORN,<br>MOUNT TOP OF DEVICE UP 6'-8" A.F.F. |
| G | GAS DETECTION/VENTILATION FAILURE STROBE,<br>MOUNT TOP OF DEVICE UP 6'-8" A.F.F. |
| | SECURITY SYSTEMS |
| SACP | SECURITY ALARM CONTROL PANEL |
| DS | SECURITY ALARM DOOR SWITCH |
| K | SECURITY ALARM KEY PAD |
| R | SECURITY SYSTEM CARD ACCESS READER |
| WS | SECURITY ALARM WINDOW SWITCH |
| | SECURITY ALARM MOTION DETECTOR |
| CCTV | CLOSED CIRCUIT TV CAMERA |
| PTZ | PAN, TILT, ZOOM CAMERA LENS CONTROLS |
| GB | GLASS BREAK DETECTOR |
| | FIRE ALARM SYSTEMS |
| H 200 R | FIRE ALARM HEAT DETECTOR 135 FIXED TEMPERATURE UNLESS OTHERWISE NOTED.<br>"200" – 200 FIXED TEMPERATURE<br>"R" – FIXED TEMPERATURE RATE-OF-RISE TYPE |
| I | FIRE ALARM SMOKE DETECTOR PHOTOELECTRIC TYPE UNLESS OTHERWISE NOTED.<br>"I" – IONIZATION TYPE. |
| D | FIRE ALARM DUCT SMOKE DETECTOR |
| FACP | FIRE ALARM CONTROL PANEL |
| FV | FIRE ALARM VENTILATION PANEL WITH GRAPHIC PANEL |
| FA | REMOTE FIRE ALARM ANNUNCIATOR PANEL |

| SYMBOL | DESCRIPTION |
|---|---|
| F | FIRE ALARM MASTER BOX |
| F | FIRE ALARM HORN, MOUNT UP 7'-6" |
| 15 F | FIRE ALARM STROBE, MOUNT UP 6'-8"<br>15 = CANDELA RATING |
| 15 F | FIRE ALARM HORN AND STROBE LIGHT COMBINATION, MOUNT UP 6'-8"<br>15 = CANDELA RATING |
| F | FIRE ALARM MANUAL PULL STATION, MOUNT UP 4'-0" |
| VSS | SPRINKLER VALVE SUPERVISORY SWITCH |
| SFS | SPRINKLER FLOW ALARM SWITCH |
| F | FIRE ALARM BELL |
| FB | WEATHERPROOF HI-INTENSITY FIRE ALARM STROBE LIGHT WITH HORN |
| PIR | PASSIVE INFRARED DETECTOR |
| R | SMOKE BEAM DETECTOR (RECEIVER) |
| T | SMOKE BEAM DETECTOR (TRANSMITTER) |
| | FIRE ALARM SMOKE DETECTOR REMOTE INDICATOR AND TEST SWITCH |

| ABBREVIATIONS | |
|---|---|
| A | AMPS |
| AC | ALTERNATING CURRENT |
| AFF | ABOVE FINISHED FLOOR |
| AFG | ABOVE FINISHED GRADE |
| AL | ALUMINUM |
| AIC | AMPERE INTERRUPTING CAPACITY |
| AMP | AMPERE |
| ATS | AUTOMATIC TRANSFER SWITCH |
| AUTO | AUTOMATIC |
| AUX | AUXILIARY |
| AWG | AMERICAN WIRE GAUGE |
| BKR | BREAKER |
| BLDG | BUILDING |
| C | CONDUIT |
| CB | CIRCUIT BREAKER |
| CGD | COMBUSTIBLE GAS DETECTOR |
| CKT | CIRCUIT |
| CLB | CURRENT LIMITING BREAKER |
| CLF | CURRENT LIMITING FUSE |
| CP | CONTROL PANEL |
| CPT | CONTROL POWER TRANSFORMER |
| CR | CONTROL RELAY |
| CS | CONTROL SWITCH/CONTROL STATION |
| CT | CURRENT TRANSFORMER |
| CU | COPPER |
| CWS | CONDUIT WALL SEAL |
| DC | DIRECT CURRENT |
| DIA | DIAMETER |
| DMU | DIGITAL METERING UNIT |
| DN | DOWN |
| EC | EMPTY CONDUIT |
| ELEC | ELECTRICAL |

| ABBREVIATIONS (CONTINUED) | |
|---|---|
| ELEV | ELEVATION |
| EM | EMERGENCY |
| ENCL | ENCLOSURE OR ENCLOSED |
| EQUIP | EQUIPMENT |
| EWC | ELECTRIC WATER COOLER |
| EWH | ELECTRIC WATER HEATER |
| EX | EXISTING |
| FO | FIBER OPTIC |
| FU | FUSE |
| GCP | GENERATOR CONTROL PANEL |
| GEN | GENERATOR |
| G, GND | GROUND |
| GFI | GROUND FAULT INTERRUPTER |
| GRS | GALVANIZED RIGID STEEL |
| HACR | HEATING & AIR CONDITIONING RATED |
| HH | HANDHOLE |
| HT | HEIGHT |
| HID | HIGH INTENSITY DISCHARGE |
| HP | HORSEPOWER |
| HZ | HERTZ |
| ID | IDENTIFICATION |
| INSTR | INSTRUMENT |
| K | KILO (PREFIX) |
| kcmil | 1000 CIRCULAR MILS |
| KVA | KILOVOLT AMPERES |
| KW | KILOWATTS |
| LA | LIGHTNING ARRESTER |
| LTG | LIGHTING |
| LP | LIGHTING PANEL |
| LV | LOW VOLTAGE |
| MAX | MAXIMUM |
| MCB | MAIN CIRCUIT BREAKER |
| MCC | MOTOR CONTROL CENTER |
| MCP | MOTOR CIRCUIT PROTECTOR |
| MDP | MAIN DISTRIBUTION PANEL |
| MFR | MANUFACTURER |
| MH | MANHOLE |
| MIN | MINIMUM |
| MLO | MAIN LUGS ONLY |
| MTD | MOUNTED |
| MTS | MANUAL TRANSFER SWITCH |
| MV | MEDIUM VOLTAGE |
| N | NEUTRAL |
| NC | NORMALLY CLOSED |
| NO | NORMALLY OPEN OR NUMBER |
| NTS | NOT TO SCALE |
| OH | OVERHEAD |
| OL | OVERLOAD |
| PB | PULL BOX |
| PCP | PUMP CONTROL PANEL |
| PH | PHASE |
| PMH | POWER MANHOLE |
| PNL | PANEL OR PANELBOARD |
| PR | PAIR |
| PRI | PRIMARY |
| PT | POTENTIAL TRANSFORMER |
| PVC | POLYVINYL CHLORIDE |
| RECPT | RECEPTACLE |
| REQD | REQUIRED |
| QTY | QUANTITY |
| SA | SURGE ARRESTER |
| SEC | SECONDS OR SECONDARY |
| SH | SHIELDED OR SPACE HEATER |
| SHH | SIGNAL HANDHOLE |
| SPD | SURGE PROTECTIVE DEVICE |
| SS | STAINLESS STEEL |
| SV | SOLENOID VALVE |
| SW | SWITCH |
| SWBD | SWITCHBOARD |
| SWGR | SWITCHGEAR |
| TC | TIME TO CLOSE OR TRAY CABLE |
| TEL | TELEPHONE |
| TO | TIME TO OPEN |
| TS | TWISTED SHIELDED OR THERMAL SWITCH |
| TYP | TYPICAL |
| UG | UNDERGROUND |
| UPS | UNINTERRUPTIBLE POWER SUPPLY |
| V | VOLTS |
| VA | VOLT AMPS |
| VFD | VARIABLE FREQUENCY DRIVE |
| W | WATTS, WIDTH, WITH, WIRE |
| WP | WEATHERPROOF |
| XP | EXPLOSION PROOF |
| XFMR | TRANSFORMER |

A / E-4 — SHEET NO. WHERE DETAIL IS DRAWN

SYMBOL WHERE THERE IS A DETAIL

DETAIL A, 1/4" = 1'-0", E-3 — SHEET NO. WHERE THERE IS A DETAIL

SYMBOL WHERE DETAIL IS DRAWN

DETAIL SYMBOL

1 / E-4 — SHEET NO. WHERE SECTION IS DRAWN

SYMBOL WHERE THERE IS A SECTION

SECTION 1, 1/4" = 1'-0", E-3 — SHEET NO. WHERE SECTION IS TAKEN

SYMBOL WHERE SECTION IS DRAWN

SECTION SYMBOL

**GENERAL NOTE**
THIS IS A STANDARD LEGEND. SOME SYMBOLS MAY NOT APPEAR ON THE DRAWINGS.

DATE:
SPENCER J. PERRY JR
PE NO. 62587

| REV. NO. | DATE | DRWN | CHKD | REMARKS |
|---|---|---|---|---|
| | | | | |

DESIGNED BY: O. CRUZ
DRAWN BY: R. RUCK
SHEET CHK'D BY: X
CROSS CHK'D BY: X
APPROVED BY: S. PERRY
DATE: FEBRUARY 2020

CDM Smith
4651 Salisbury Road, Suite 420
Jacksonville, FL 32256
Tel: (904) 731-7109
FL COA No. EB-0000020

JEA

WILSON BLVD. (180-45) AND 118th ST. (180-47)
MASTER PUMP STATION IMPROVEMENTS

ELECTRICAL LEGEND II

PROJECT NO. 6103-234169
FILE NAME: E002NFLG.DWG

SHEET NO.
E-2

60% SUBMITTAL - NOT FOR CONSTRUCTION

XREFs: [CDMS_2234] Images: []
Last saved by: HUNTERJS Time: 10/1/2019 4:59:43 PM
pw:\\pw.cdmsmith.com:PW_XM\6103\234169 JEA PDB\04 Design Services NM_30%\09 Electric\\10 CADD\E002NFLG.dwg
©2020 CDM SMITH ALL RIGHTS RESERVED.
REUSE OF DOCUMENTS: THESE DOCUMENTS AND DESIGNS PROVIDED BY PROFESSIONAL SERVICE, INCORPORATED HEREIN, ARE THE PROPERTY OF CDM SMITH. THEY ARE NOT TO BE USED, IN WHOLE OR PART, FOR ANY OTHER PROJECT WITHOUT THE WRITTEN AUTHORIZATION OF CDM SMITH.

## SCOPE OF WORK:

1. PROJECT PROVIDES ELECTRICAL UPGRADES AT JEA'S 118TH ST. AND WILSON BLVD. PUMP STATIONS. MAJOR IMPROVEMENTS INCLUDE, BUT ARE NOT LIMITED TO NEW ELECTRICAL DISTRIBUTION EQUIPMENT, POWER HOUSE, GENERATOR, CONDUIT, WIRE AND APPURTENANCES.

## GENERAL NOTES:

1. ELECTRICAL DRAWINGS ARE INTENDED TO SHOW THE GENERAL LAYOUT OF WORK TO BE INSTALLED UNDER THIS CONTRACT WITHOUT ATTEMPTING TO SHOW ALL DETAILS. FURNISH LABOR, MATERIALS, EQUIPMENT AND INCIDENTALS REQUIRED FOR A COMPLETE AND OPERATIONAL ELECTRICAL SYSTEM AS SHOWN ON THE CONTRACT DOCUMENTS.
2. COORDINATE WORK WITH OTHER TRADES AND THE OWNER.
3. MAINTAIN EXISTING PROCESS OPERATIONS. POWER INTERRUPTIONS TO ELECTRICAL EQUIPMENT SHALL BE AT OWNER'S CONVENIENCE WITH 72 HOURS MINIMUM NOTICE. EACH INTERRUPTION SHALL HAVE PRIOR WRITTEN APPROVAL.
4. FIELD VERIFY EXISTING UNDERGROUND ELECTRICAL CONDUIT, CONCRETE DUCT BANKS, MANHOLES, PULL BOXES, ETC. AND MECHANICAL PIPING. CONTRACTOR SHALL INCLUDE IN BID COSTS ASSOCIATED WITH RELOCATION OR REMOVAL OF UNDERGROUND EQUIPMENT AS REQUIRED BY THIS CONTRACT. USE DUE CARE IN CONGESTED AREAS TO AVOID DAMAGE TO EXISTING UNDERGROUND UTILITIES.
5. CONTRACTOR'S WORK SHALL INCLUDE COMPLETE TESTING OF EQUIPMENT AND WIRING INCLUDING MAKING MINOR CORRECTIONS, CHANGES, OR ADJUSTMENTS NECESSARY FOR THE PROPER FUNCTIONING OF THE SYSTEM AND EQUIPMENT. WORKMANSHIP SHALL BE OF THE HIGHEST QUALITY; SUBSTANDARD WORK WILL BE REJECTED.
6. DO NOT SCALE ELECTRICAL DRAWINGS. REFER TO MECHANICAL, STRUCTURAL DRAWINGS, AND APPROVED MANUFACTURER'S SHOP DRAWINGS FOR EXACT LOCATION OF EQUIPMENT. EXCEPT WHERE DIMENSIONS ARE SHOWN, LOCATIONS OF EQUIPMENT, FIXTURES, OUTLETS, AND SIMILAR DEVICES ARE APPROXIMATE.
7. WORK SHALL COMPLY WITH NEC AND LOCAL CODES.
8. DO NOT SPLICE CONDUCTORS EXCEPT AS NOTED.
9. POWER AND CONTROL CONDUITS SHALL HAVE AN EQUIPMENT GROUNDING CONDUCTOR WIRE SIZED PER TABLE 250.122 OF THE NEC (UON).
10. COORDINATE SEQUENCE OF CONSTRUCTION WITH CIVIL, MECHANICAL, AND STRUCTURAL DISCIPLINES. PROVIDE TEMPORARY POWER AND CONTROL CIRCUITS AS REQUIRED TO MAINTAIN FACILITY OPERATION. VERIFY EXISTING UTILITIES IN AREA OF CONSTRUCTION. REFER TO CIVIL DRAWINGS FOR ADDITIONAL UNDERGROUND INFORMATION.
11. REPAIR, IN ACCORDANCE WITH SPECIFICATIONS, SIDEWALKS, WALLS, ROADWAYS, ETC. DISTURBED BY CONSTRUCTION ACTIVITIES WHETHER OR NOT SHOWN FOR REPAIR/REPAVING ON CIVIL DRAWINGS.
12. CONCEAL CONDUITS TO GREATEST EXTENT PRACTICABLE. CONDUITS RUN AT EXISTING STRUCTURES SHALL BE RUN EXPOSED.
13. WHERE LOCAL DISCONNECTS AND CONTROL PANELS ARE SHOWN ON PLAN VIEWS, LOCATIONS ARE APPROXIMATE. ADJUST LOCATION AS REQUIRED TO COMPLY WITH NEC ARTICLE 110 FOR WORKING CLEARANCES.
14. DO NOT INSTALL MAJOR CONDUIT RUNS THROUGH AREAS DESIGNATED FOR FUTURE STRUCTURES.

## SEISMIC RESTRAINTS:

1. PROVIDE SEISMIC RESTRAINTS FOR ELECTRICAL EQUIPMENT AND SYSTEMS AS REQUIRED BY SECTION 01 82 16.

## SUBMITTALS:

1. SUBMIT SHOP DRAWINGS FOR EQUIPMENT, MATERIALS AND OTHER ITEMS FURNISHED UNDER DIVISION 26.
2. SUBMIT CONDUIT SHOP DRAWINGS FOR YARD ELECTRICAL, WITHIN AND UNDER ROADS, BUILDINGS AND STRUCTURES PRIOR TO COMMENCING WORK. DO NOT POUR CONCRETE UNTIL ENGINEER HAS APPROVED THE ASSOCIATED SHOP DRAWING.
3. SUBMIT POWER SYSTEM STUDY IN ACCORDANCE WITH SECTION 26 05 73.
4. SUBMIT OPERATION AND MAINTENANCE MANUALS FOR EQUIPMENT FURNISHED UNDER DIVISION 26.
5. SUBMIT STARTUP/COMMISSIONING PLANS FOR EQUIPMENT FURNISHED UNDER DIVISION 26.
6. SUBMIT TESTING AND SERVICE REPORTS FOR EQUIPMENT AND MATERIALS FURNISHED UNDER DIVISION 26.
7. SUBMIT TRAINING PLANS FOR EQUIPMENT FURNISHED UNDER DIVISION 26.
8. SUBMIT RECORD DOCUMENTATION TO ACCURATELY SHOW COMPLETED INSTALLATION. INCLUDE MODIFICATIONS TO CONTRACT DOCUMENTS (ONE LINE POWER DIAGRAMS, EQUIPMENT ELEVATIONS, PANEL SCHEDULES, ELEMENTARY CONTROL DIAGRAMS, RISER DIAGRAMS, PLANS, CONDUIT AND DUCTBANK ROUTING, ETC) ALONG WITH ADDITIONAL DRAWINGS OR SKETCHES CREATED TO CONVEY COMPLETED INSTALLATION.

## INTERPRETATION OF CONTRACT DOCUMENTS:

1. IF DURING PERFORMANCE OF WORK, THERE IS A CONFLICT, ERROR, OR DISCREPANCY BETWEEN OR AMONG CONTRACT DOCUMENTS AND LAWS AND REGULATIONS, PROVIDE THE HIGHER PERFORMANCE STANDARD UNLESS OTHERWISE DIRECTED BY ENGINEER.
2. PRIORITY OF DOCUMENTS: FIGURED DIMENSIONS GOVERN OVER SCALED DIMENSIONS, DETAILED DRAWINGS GOVERN OVER GENERAL DRAWINGS, LARGER SCALE DRAWINGS TAKE PRECEDENCE OVER SMALLER SCALE DRAWINGS, CHANGE ORDER DRAWINGS SUPERCEDE ORIGINAL CONTRACT DRAWINGS, AND CONTRACT DRAWINGS GOVERN SHOP DRAWINGS.
3. IN GENERAL, DRAWINGS DO NOT SHOW CONDUIT ROUTING. PLAN AND ROUTE CONDUITS IN COMPLIANCE WITH SPECIFICATIONS AND DRAWING DETAILS. COORDINATE INSTALLATION WITH OTHER TRADES AND ACTUAL SUPPLIED EQUIPMENT.
4. DUCTBANK ROUTING SHOWN ON ELECTRICAL SITE PLANS IS DIAGRAMMATIC IN NATURE AND MAY NOT INCLUDE INTERFERENCES THAT MAY BE PRESENT.
5. SEE ADDITIONAL NOTES ON ELECTRICAL LEGEND II SHEET.

## ENCLOSURE TYPES:

PROVIDE THE FOLLOWING NEMA TYPE ELECTRICAL ENCLOSURES, UNLESS OTHERWISE NOTED:

1. NEMA 1 IN DRY, NON-PROCESS INDOOR LOCATIONS.
2. NEMA 12 IN "DUST" LOCATIONS SHOWN ON THE DRAWINGS.
3. NEMA 4X IN OUTDOOR LOCATIONS, ROOMS BELOW GRADE INCLUDING BASEMENTS AND BURIED VAULTS AND "DAMP" OR "WET" LOCATIONS SHOWN ON THE DRAWINGS.
4. NEMA 4X IN "CORROSIVE" LOCATIONS SHOWN ON THE DRAWINGS.
5. NEMA 7 AND LISTED FOR THE SPECIFIC NEC HAZARDOUS AREA CLASSIFICATION AS SHOWN ON THE DRAWINGS.

## NEC CLASSIFIED HAZARDOUS AREAS:

1. THIS PROJECT INCLUDES NEC CLASSIFIED HAZARDOUS AREAS. THE FOLLOWING NATIONAL FIRE PROTECTION ASSOCIATION (NFPA) STANDARDS APPLY:

- NFPA 820 – STANDARD FOR FIRE PROTECTION IN WASTEWATER TREATMENT AND COLLECTION FACILITIES
- NFPA 70 – NATIONAL ELECTRICAL CODE.

2. REFER TO SHEET XXXX FOR ADDITIONAL INFORMATION ON CLASSIFICATION BOUNDARIES.
3. EQUIPMENT, MATERIALS, AND INSTALLATION SHALL COMPLY WITH NEC ARTICLES 500, 501, 502, AND 503.

## MATERIALS AND EQUIPMENT:

1. PROVIDE NEW MATERIALS AND EQUIPMENT UNLESS SPECIFICALLY NOTED OTHERWISE.
2. ELECTRICAL EQUIPMENT AND MATERIALS SHALL BE LISTED BY UNDERWRITER'S LABORATORIES, INC., AND SHALL BEAR APPROPRIATE UL LISTING MARK OR CLASSIFICATION MARKING. EQUIPMENT, MATERIALS, ETC. UTILIZED NOT BEARING A UL CERTIFICATION SHALL BE FIELD OR FACTORY UL CERTIFIED PRIOR TO EQUIPMENT ACCEPTANCE AND USE.
3. PROVIDE MAJOR ELECTRICAL EQUIPMENT BY A SINGLE MANUFACTURER: I.E. UNIT SUBSTATIONS, SWITCHGEAR, MOTOR CONTROL CENTERS, DISCONNECT SWITCHES, TRANSFORMERS, PANELBOARDS, ETC.

## EQUIPMENT SIZE, HANDLING AND STORAGE:

1. COORDINATE WITH EQUIPMENT MANUFACTURER SHIPPING SPLITS TO PERMIT SAFE HANDLING AND PASSAGE OF EQUIPMENT TO FINAL INSTALLATION LOCATION.
2. COMPLY WITH MANUFACTURER'S INSTRUCTIONS FOR UPRIGHT EQUIPMENT ORIENTATION DURING TRANSPORTATION.
3. PROTECT EQUIPMENT FROM MECHANICAL INJURY, OR EXPOSURE TO MOISTURE, CHEMICALS, OR CORROSIVE GASES. DO NOT STORE ELECTRICAL EQUIPMENT OUTDOORS.
4. PROVIDE AND ENERGIZE TEMPORARY SPACE HEATERS IF REQUIRED TO CONTROL MOISTURE DURING STORAGE.

## CUTTING AND PATCHING:

1. CUT AND PATCH IN A WORKMANLIKE MANNER AS REQUIRED TO INSTALL ELECTRICAL WORK.
2. CUTTING OF STRUCTURAL MEMBERS SUCH AS JOISTS, BEAMS, GIRDERS OR COLUMNS IS PROHIBITED.
3. PATCH SURFACES TO RESTORE TO ORIGINAL INTEGRITY (WATERPROOF OR FIREPROOF AS REQUIRED) AND APPEARANCE.

## SERVICE AND METERING:

1. ELECTRIC POWER COMPANY SERVING THIS PROJECT IS JEA. POWER COMPANY CONTACT IS XXXXXXXXX, TELEPHONE XXXXXXX, EMAIL XXXXXX. COMPLY WITH POWER COMPANY STANDARDS.
2. PAY FOR FEES AND CHARGES AS REQUIRED FOR TEMPORARY/CONSTRUCTION POWER FOR CONTRACTOR'S USE.
3. PAY FEES AND CHARGES FOR PERMANENT SERVICE VIA BID ALLOWANCE AND SUBMIT POWER COMPANY INVOICES TO OWNER FOR SUBSTANTIATION.
4. POWER COMPANY WORK:
   - FURNISH CONDUIT MATERIALS FOR UNDERGROUND SERVICE TO UTILITY TRANSFORMER(S).
   - PROVIDE PRIMARY CONDUCTORS (OVERHEAD AND UNDERGROUND) TO UTILITY TRANSFORMER(S).
   - PROVIDE UTILITY TRANSFORMER PAD(S) AND GROUNDING.
   - PROVIDE UTILITY TRANSFORMER(S).
   - TERMINATE UNDERGROUND PRIMARY CABLES AT THE UTILITY TRANSFORMER(S).
   - TERMINATE UNDERGROUND SECONDARY CABLES AT THE UTILITY TRANSFORMER(S).
   - PROVIDE METERING CURRENT TRANSFORMERS (CT'S), METER(S) AND METER WIRING.
5. CONTRACTOR WORK:
   - ARRANGEMENTS WITH POWER COMPANY TO OBTAIN SERVICE, PAY POWER COMPANY FEES, AND PROVIDE LABOR AND MATERIALS REQUIRED FOR ELECTRICAL SERVICE.
   - INSTALL PRIMARY UNDERGROUND CONDUITS.
   - PROVIDE SECONDARY UNDERGROUND CONDUITS AND CABLE FROM UTILITY TRANSFORMER(S) TO SERVICE ENTRANCE EQUIPMENT.
   - PROVIDE POWER COMPANY APPROVED METERING CURRENT TRANSFORMER (CT) ENCLOSURE.
   - INSTALL METER BASE ENCLOSURE.
   - PROVIDE EMPTY CONDUIT WITH PULL LINE FROM THE METERING CT ENCLOSURE TO THE METER BASE ENCLOSURE.

## DEMOLITION AND DISPOSITION OF EQUIPMENT:

1. DRAWING PLANS SHOWING REMOVAL OF MAJOR MECHANICAL AND ELECTRICAL EQUIPMENT IS NOT INTENDED TO SHOW ALL COMPONENTS TO BE DEMOLISHED. NOT ALL PIPING, CONDUITS, DUCTS, EQUIPMENT, ANCILLARY DEVICES, ETC. ARE SHOWN. THE CONTRACTOR IS TO FIELD VERIFY EXISTING CONDITIONS PRIOR TO BID.
2. UNLESS OTHERWISE SPECIFICALLY NOTED, REMOVE UNUSED EXPOSED CONDUIT AND SUPPORT SYSTEMS BACK TO SOURCE AND/OR POINT OF CONCEALMENT INCLUDING ABOVE ACCESSIBLE CEILING FINISHES. WIRING SHALL BE REMOVED.
3. CUT FLUSH WITH SLAB, CEILING, OR WALL ABANDONED CONCEALED CONDUIT. SUITABLY PLUG CONDUITS.
4. REPAIR AND RESTORE ADJACENT CONSTRUCTION AND FINISHES AFTER DEMOLITION IS COMPLETE.
5. MATERIAL AND EQUIPMENT INDICATED FOR REMOVAL OR DEMOLITION IS TO BECOME CONTRACTOR'S PROPERTY UPON REMOVAL, UNLESS NOTED OTHERWISE. REMOVED MATERIAL TO BE PROPERLY HANDLED AND DISPOSED.

## CLEANING:

1. REMOVE ALL RUBBISH AND DEBRIS FROM INSIDE AND AROUND ELECTRICAL EQUIPMENT AND ENCLOSURES.
2. REMOVE DIRT, DUST OR CONCRETE SPATTER FROM INTERIOR AND EXTERIOR OF EQUIPMENT USING BRUSHES, VACUUM CLEANER OR CLEAN LINT-FREE RAGS. DO NOT USE COMPRESSED AIR.

## DELEGATED DESIGN / PROFESSIONAL ENGINEERING SERVICES:

1. WHEN ENGINEERING SERVICES ARE SPECIFIED TO BE PROVIDED BY CONTRACTOR, CONTRACTOR SHALL RETAIN A LICENSED PROFESSIONAL ENGINEER TO PERFORM THE SERVICES. ENGINEER SHALL BE LICENSED AT THE TIME SERVICES ARE PERFORMED AND LICENSED IN THE STATE IN WHICH PROJECT IS LOCATED. IF THE STATE ISSUES DISCIPLINE SPECIFIC LICENSES, ENGINEER SHALL BE LICENSED IN THE APPLICABLE DISCIPLINE. ENGINEER SHALL BE EXPERIENCED IN THE TYPE OF WORK BEING PERFORMED.
2. ENGINEERING WORK SHALL BE DONE ACCORDING TO THE APPLICABLE REGULATIONS FOR PROFESSIONAL ENGINEERS TO INCLUDE SIGNING, SEALING AND DATING DOCUMENTS.

## MAJOR ELECTRICAL SEQUENCE OF CONSTRUCTION:

THE FOLLOWING SEQUENCE IS RECOMMENDED TO MAINTAIN THE PLANT IN OPERATION. ADDITIONAL INFORMATION CAN BE FOUND IN SECTION 01 00 10.

1. XXXXXXXXXX
2. XXXXXXX
3.

DATE:
SPENCER J. PERRY JR
PE NO. 62587

| REV. NO. | DATE | DRWN | CHKD | REMARKS |
|---|---|---|---|---|
| | | | | |

DESIGNED BY: O. CRUZ
DRAWN BY: R. RUCK
SHEET CHK'D BY: X
CROSS CHK'D BY: X
APPROVED BY: S. PERRY
DATE: FEBRUARY 2020

CDM Smith
4651 Salisbury Road, Suite 420
Jacksonville, FL 32256
Tel: (904) 731-7109
FL COA No. EB-0000020

JEA

WILSON BLVD. (180-45) AND 118th ST. (180-47)
MASTER PUMP STATION IMPROVEMENTS

GENERAL ELECTRICAL NOTES

PROJECT NO. 6103-234169
FILE NAME: E003NFNT.DWG

SHEET NO.
E-3

60% SUBMITTAL - NOT FOR CONSTRUCTION

XREFs: [CDMS_2234] Images: []
Last saved by: CARTERRH Time: 10/16/2019 1:03:16 PM
pw:\\pw.cdmsmith.com:PW_XM\\6103\234169 JEA PDB\04 Design Services NM_30%\09 Electrical\10 CADD\E003NFNT.dwg
©2020 CDM SMITH ALL RIGHTS RESERVED.
REUSE OF DOCUMENTS: THESE DOCUMENTS AND DESIGNS PROVIDED BY PROFESSIONAL SERVICE, INCORPORATED HEREIN, ARE THE PROPERTY OF CDM SMITH AND ARE NOT TO BE USED, IN WHOLE OR PART, FOR ANY OTHER PROJECT WITHOUT THE WRITTEN AUTHORIZATION OF CDM SMITH.

XREFs: [CWZOOOST, CDMS_2234, CEP000SS] Images: []
Last saved by: RUCKRM Time: 2/14/2020 5:04:46 PM
pw:\\cdmsmith-a202-pw.bentley.com:PW_XM1\6103\234169 JEA PDB\04 Design Services NM_608\09 Electrical\10 CADD\E004STPL.dwg
©2020 CDM SMITH ALL RIGHTS RESERVED.
REUSE OF DOCUMENTS: THESE DOCUMENTS AND DESIGNS PROVIDED BY PROFESSIONAL SERVICE, INCORPORATED HEREIN, ARE THE PROPERTY OF CDM SMITH AND ARE NOT TO BE USED, IN WHOLE OR PART, FOR ANY OTHER PROJECT WITHOUT THE WRITTEN AUTHORIZATION OF CDM SMITH.

## GENERAL NOTES:

A. DO NOT SCALE THE ELECTRICAL DRAWINGS REFER TO THE CIVIL, MECHANICAL, STRUCTURAL DRAWINGS, AND APPROVED MANUFACTURER'S SHOP DRAWINGS FOR THE EXACT LOCATION OF ALL EQUIPMENT.

B. ALL WORK SHALL COMPLY WITH NEC AND LOCAL CODES.

C. CONDUCTORS SHALL NOT BE SPLICED EXCEPT AS NOTED IN SPECS.

D. ALL CONDUITS SHALL HAVE A BOND WIRE SIZED PER TABLE 250.122 OF THE NEC (UNLESS OTHERWISE NOTED).

E. CONTRACTOR SHALL FIELD VERIFY EXISTING UNDERGROUND UTILITIES, PIPING, ETC. REROUTE NEW CONDUITS, DUCTBANK, MANHOLES, PULL BOXES, ETC., AS REQUIRED AT NO ADDITIONAL COST TO THE OWNER.

N

1" = 10'
5 0 10

L1
E-35
POLE MOUNTED LUMINAIRE (TYP)

LP-A

PLAN

DATE:
SPENCER J. PERRY JR
PE NO. 62587

| REV. NO. | DATE | DRWN | CHKD | REMARKS |
|---|---|---|---|---|

DESIGNED BY: O. CRUZ
DRAWN BY: R. CARTER
SHEET CHK'D BY: X
CROSS CHK'D BY: X
APPROVED BY: X
DATE: FEBRUARY 2020

CDM Smith
4651 Salisbury Road, Suite 420
Jacksonville, FL 32256
Tel: (904) 731-7109
FL COA No. EB-0000020

JEA

WILSON BLVD. (180-45) AND 118th ST. (180-47)
MASTER PUMP STATION IMPROVEMENTS

WILSON BLVD. MASTER PUMP STATION
ELECTRICAL SITE PLAN

PROJECT NO. 6103-234169
FILE NAME: E004STPL.DWG

SHEET NO.
E-4

60% SUBMITTAL - NOT FOR CONSTRUCTION

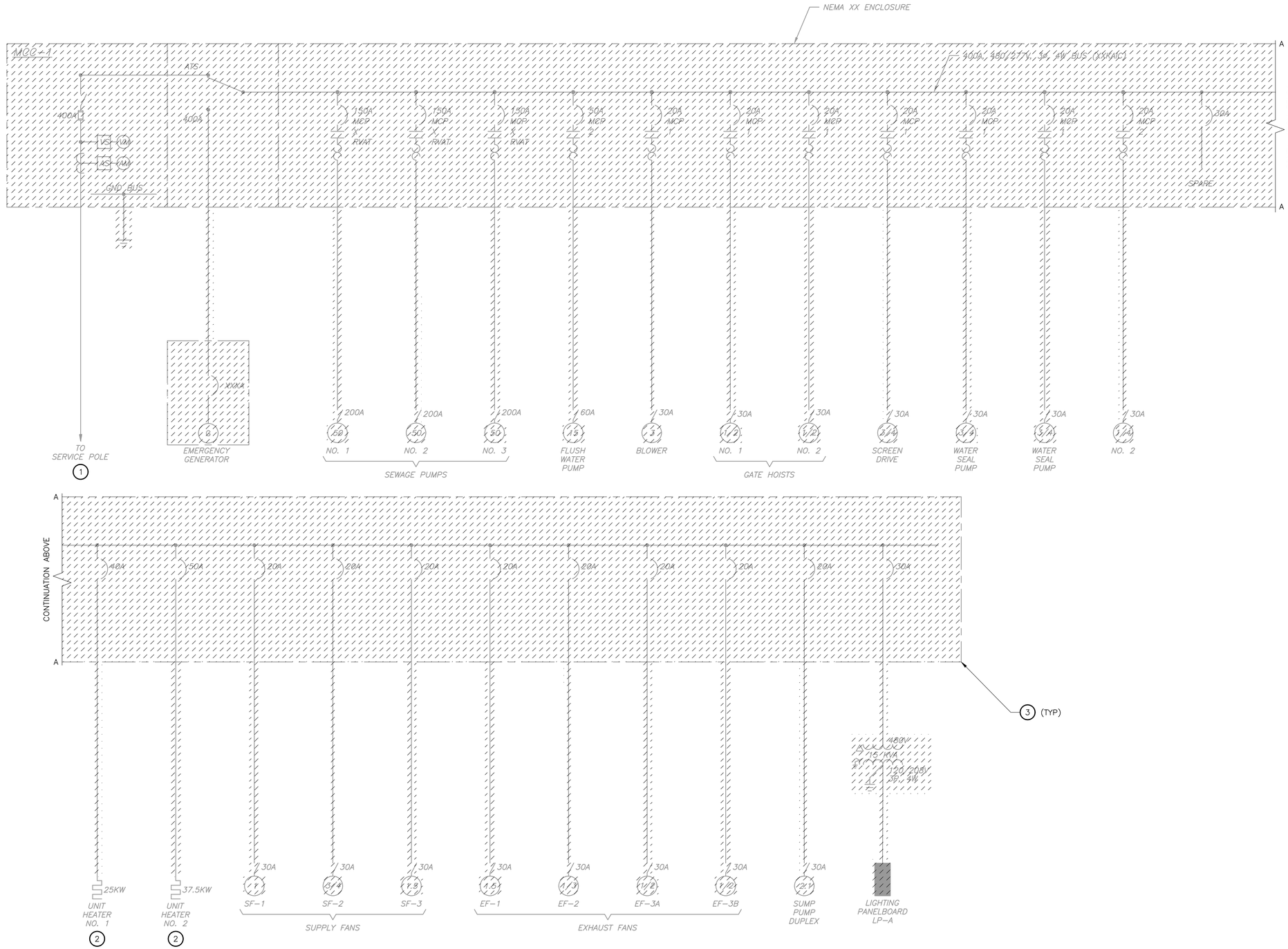


**KEYED NOTES:**

1. XXXX

EXISTING MCC-1

## ONE LINE POWER DIAGRAM

DATE:
SPENCER J. PERRY JR
PE NO. 62587

| REV. NO. | DATE | DRWN | CHKD | REMARKS |
|---|---|---|---|---|

DESIGNED BY: O. CRUZ
DRAWN BY: R. CARTER
SHEET CHK'D BY: X
CROSS CHK'D BY: X
APPROVED BY: S. PERRY
DATE: FEBRUARY 2020

CDM Smith
4651 Salisbury Road, Suite 420
Jacksonville, FL 32256
Tel: (904) 731-7109
FL COA No. EB-0000020

JEA

WILSON BLVD. (180-45) AND 118th ST. (180-47)
MASTER PUMP STATION IMPROVEMENTS

WILSON BLVD. MASTER PUMP STATION
ONE LINE POWER DIAGRAM
DEMOLITION

PROJECT NO. 6103-234169
FILE NAME: E005NFOL.DWG

SHEET NO.
E-5

60% SUBMITTAL - NOT FOR CONSTRUCTION

XREFs: [CDMS_2234] Images: []
Last saved by: CARTERRH Time: 1/29/2020 11:17:05 AM
pw:\\pw.cdmsmith.com:PW_XMI\6103\234169 JEA PDB\04 Design Services NM_60%\09 Electrical\10 CADD\E005NFOL.dwg
©2020 CDM SMITH ALL RIGHTS RESERVED.
REUSE OF DOCUMENTS: THESE DOCUMENTS AND DESIGNS PROVIDED BY PROFESSIONAL SERVICE, INCORPORATED HEREIN, ARE THE PROPERTY OF CDM SMITH AND ARE NOT TO BE USED, IN WHOLE OR PART, FOR ANY OTHER PROJECT WITHOUT THE WRITTEN AUTHORIZATION OF CDM SMITH.

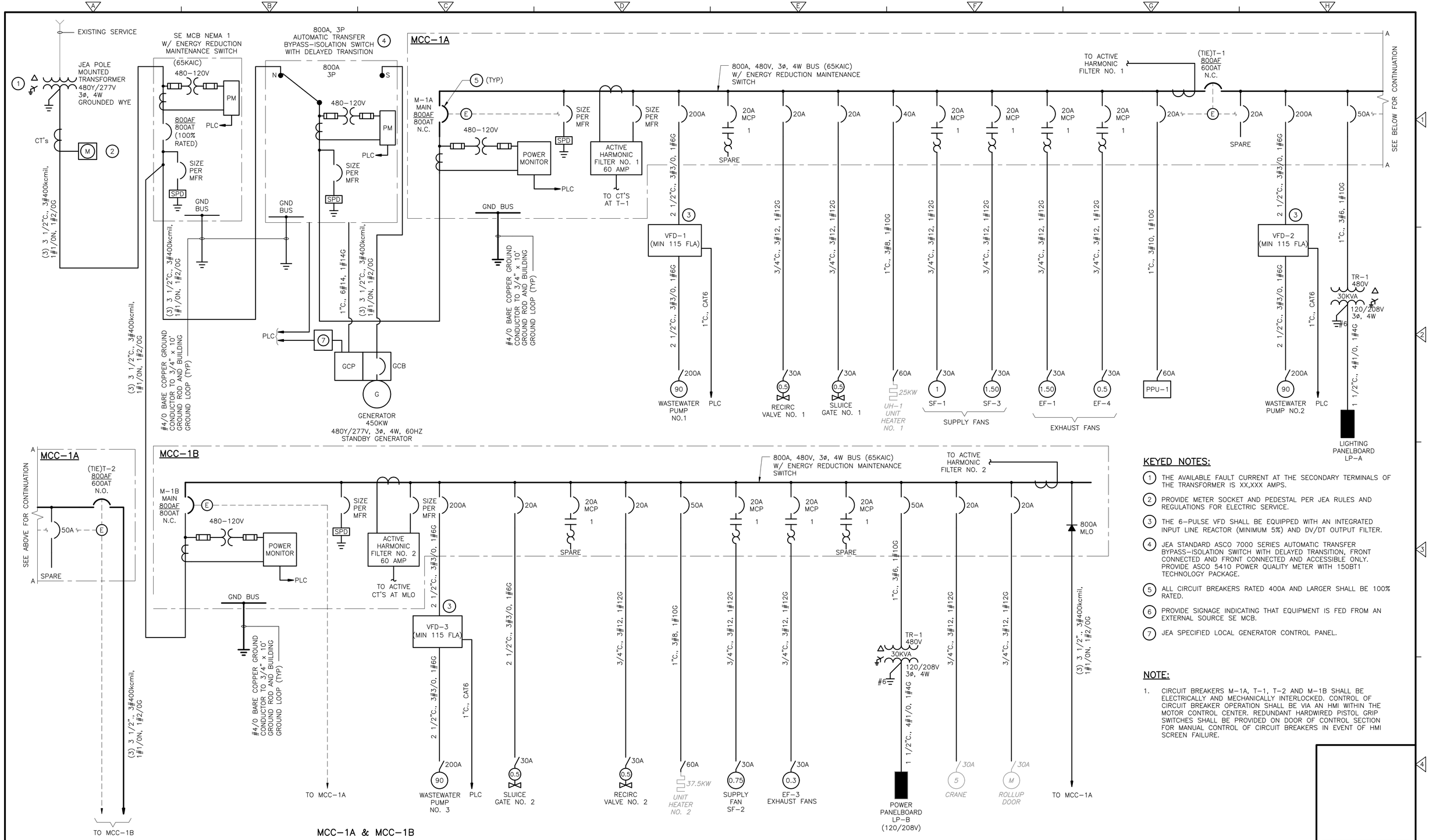


MCC-1A & MCC-1B

## ONE LINE POWER DIAGRAMS

### KEYED NOTES:

1. THE AVAILABLE FAULT CURRENT AT THE SECONDARY TERMINALS OF THE TRANSFORMER IS XX,XXX AMPS.
2. PROVIDE METER SOCKET AND PEDESTAL PER JEA RULES AND REGULATIONS FOR ELECTRIC SERVICE.
3. THE 6-PULSE VFD SHALL BE EQUIPPED WITH AN INTEGRATED INPUT LINE REACTOR (MINIMUM 5%) AND DV/DT OUTPUT FILTER.
4. JEA STANDARD ASCO 7000 SERIES AUTOMATIC TRANSFER BYPASS-ISOLATION SWITCH WITH DELAYED TRANSITION, FRONT CONNECTED AND FRONT CONNECTED AND ACCESSIBLE ONLY. PROVIDE ASCO 5410 POWER QUALITY METER WITH 150BT1 TECHNOLOGY PACKAGE.
5. ALL CIRCUIT BREAKERS RATED 400A AND LARGER SHALL BE 100% RATED.
6. PROVIDE SIGNAGE INDICATING THAT EQUIPMENT IS FED FROM AN EXTERNAL SOURCE SE MCB.
7. JEA SPECIFIED LOCAL GENERATOR CONTROL PANEL.

### NOTE:

1. CIRCUIT BREAKERS M-1A, T-1, T-2 AND M-1B SHALL BE ELECTRICALLY AND MECHANICALLY INTERLOCKED. CONTROL OF CIRCUIT BREAKER OPERATION SHALL BE VIA AN HMI WITHIN THE MOTOR CONTROL CENTER. REDUNDANT HARDWIRED PISTOL GRIP SWITCHES SHALL BE PROVIDED ON DOOR OF CONTROL SECTION FOR MANUAL CONTROL OF CIRCUIT BREAKERS IN EVENT OF HMI SCREEN FAILURE.

DATE:
SPENCER J. PERRY JR
PE NO. 62587

| REV. NO. | DATE | DRWN | CHKD | REMARKS |
|---|---|---|---|---|

DESIGNED BY: O. CRUZ
DRAWN BY: R. RUCK
SHEET CHK'D BY: X
CROSS CHK'D BY: X
APPROVED BY: S. PERRY
DATE: FEBRUARY 2020

CDM Smith
4651 Salisbury Road, Suite 420
Jacksonville, FL 32256
Tel: (904) 731-7109
FL COA No. EB-0000020

JEA

WILSON BLVD. (180-45) AND 118th ST. (180-47)
MASTER PUMP STATION IMPROVEMENTS

WILSON BLVD. MASTER PUMP STATION
ONE LINE POWER DIAGRAM

PROJECT NO. 6103-234169
FILE NAME: E006NFOL.DWG

SHEET NO.
E-6

60% SUBMITTAL - NOT FOR CONSTRUCTION

XREFs: [CDMS_2234] Images: []
Last saved by: CRUZOO Time: 2/24/2020 10:51:58 AM
pw:\\cdmsmith-az02-pw.bentley.com:PW_XM1\6103\234169 JEA PDB\04 Design Services NM_60%\09 Electrical\10 CADD\E006NFOL.dwg
©2020 CDM SMITH ALL RIGHTS RESERVED.
REUSE OF DOCUMENTS: THESE DOCUMENTS AND DESIGNS PROVIDED BY PROFESSIONAL SERVICE, INCORPORATED HEREIN, ARE THE PROPERTY OF CDM SMITH AND ARE NOT TO BE USED, IN WHOLE OR PART, FOR ANY OTHER PROJECT WITHOUT THE WRITTEN AUTHORIZATION OF CDM SMITH.

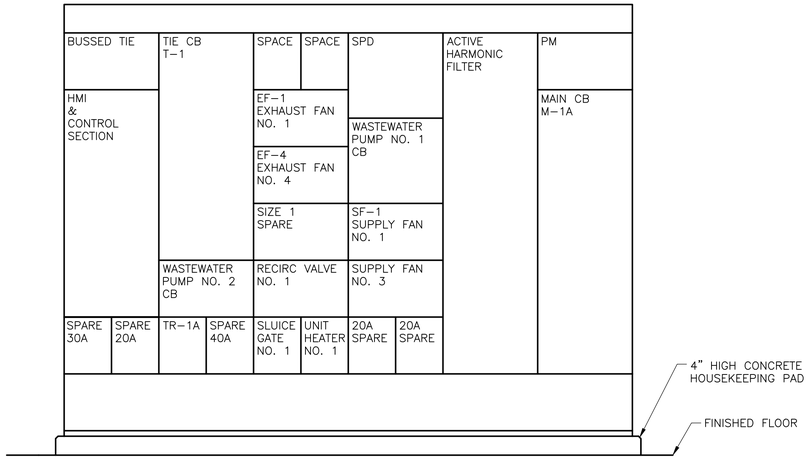


MCC-1A

FRONT ELEVATION

(WILSON BLVD.)

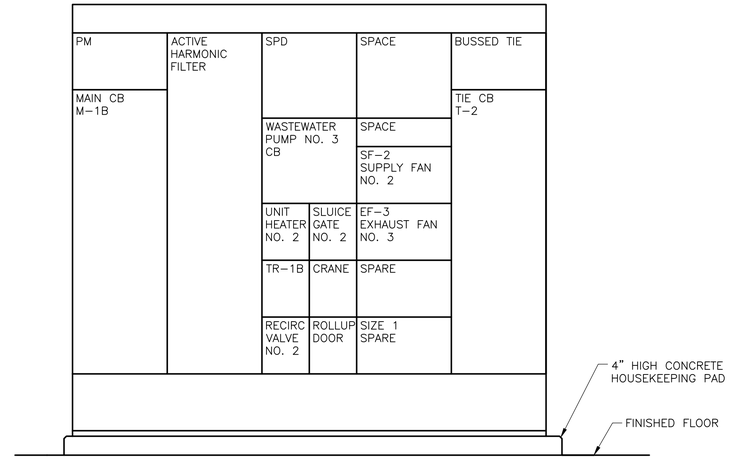


MCC-1B

FRONT ELEVATION

(WILSON BLVD.)

| REV. NO. | DATE | DRWN | CHKD | REMARKS |
|---|---|---|---|---|
| | | | | |

DESIGNED BY: O. CRUZ
DRAWN BY: R. CARTER
SHEET CHK'D BY: X
CROSS CHK'D BY: X
APPROVED BY: S. PERRY
DATE: FEBRUARY 2020

CDM Smith
4651 Salisbury Road, Suite 420
Jacksonville, FL 32256
Tel: (904) 731-7109
FL COA No. EB-0000020

JEA

WILSON BLVD. (180-45) AND 118th ST. (180-47)
MASTER PUMP STATION IMPROVEMENTS

WILSON BLVD. PUMP STATION
EQUIPMENT FRONT VIEWS

DATE:
SPENCER J. PERRY JR
PE NO. 62587

PROJECT NO. 6103-234169
FILE NAME: E007NFEQ.DWG

SHEET NO.
E-7

60% SUBMITTAL - NOT FOR CONSTRUCTION

XREFs: [CDMS_2234] Images: []
Last saved by: CRUZOD Time: 2/20/2020 12:17:06 PM
pw:\\cdmsmith-az02-pw.bentley.com:PW_XM1\6103\234169 JEA PDB\04 Design Services NM_60%\09 Electrical\10 CADD\E007NFEQ.dwg
©2020 CDM SMITH ALL RIGHTS RESERVED.
REUSE OF DOCUMENTS: THESE DOCUMENTS AND DESIGNS PROVIDED BY PROFESSIONAL SERVICE, INCORPORATED HEREIN, ARE THE PROPERTY OF CDM SMITH AND ARE NOT TO BE USED, IN WHOLE OR PART, FOR ANY OTHER PROJECT WITHOUT THE WRITTEN AUTHORIZATION OF CDM SMITH.

© 2019 CDM SMITH ALL RIGHTS RESERVED.
REUSE OF DOCUMENTS: THESE DOCUMENTS AND DESIGNS PROVIDED BY PROFESSIONAL SERVICE, INCORPORATED HEREIN, ARE THE PROPERTY OF CDM SMITH AND ARE NOT TO BE USER, IN WHOLE OR PART, FOR ANY OTHER PROJECT WITHOUT THE WRITTEN AUTHORIZATION OF CDM SMITH.

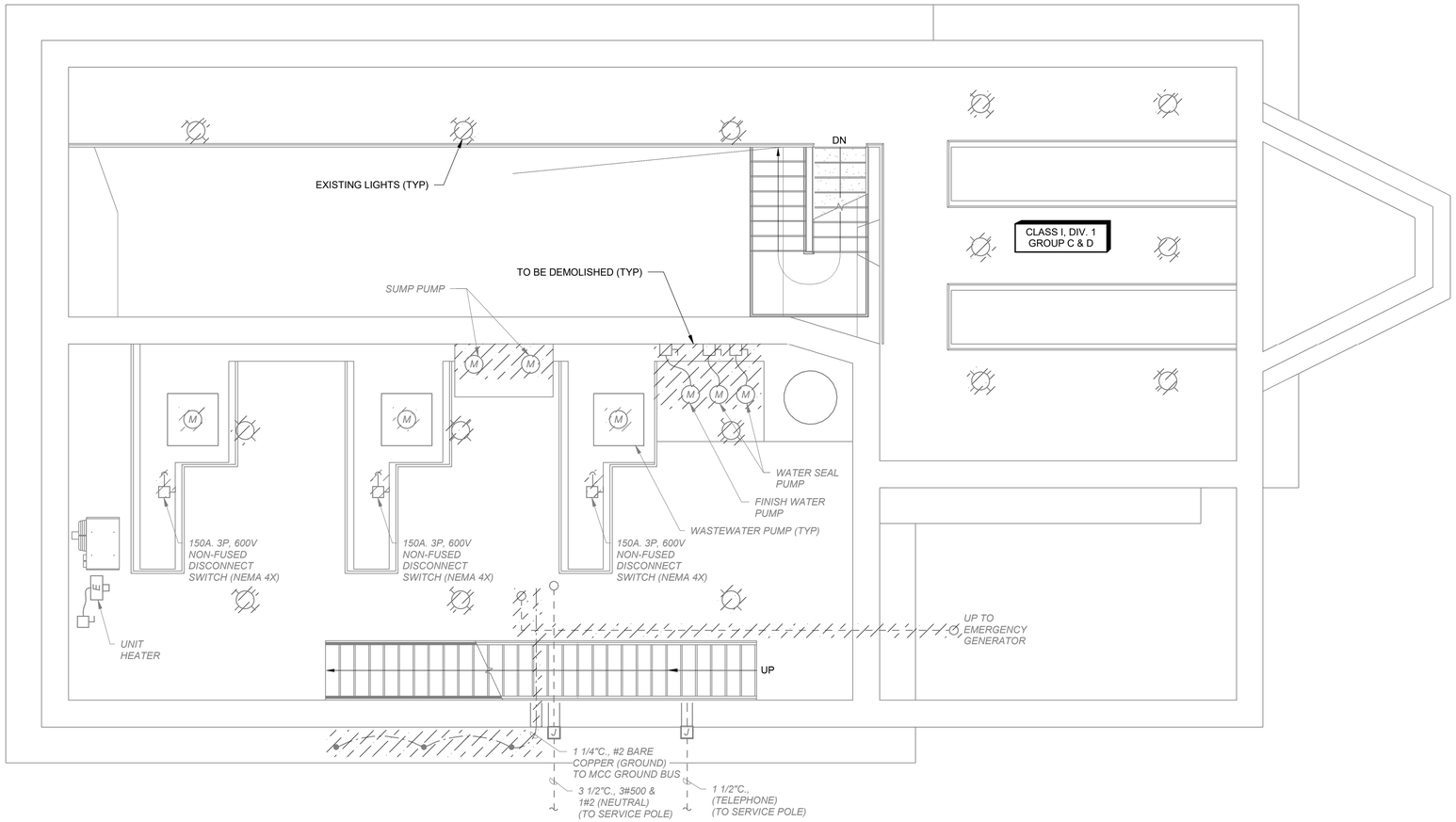


**PLAN**
1/4" = 1'-0"

DATE:
SPENCER J. PERRY JR
PE NO. 62587

| REV. NO. | DATE | DRWN | CHKD | REMARKS |
|---|---|---|---|---|

DESIGNED BY: O. CRUZ
DRAWN BY: R. RUCK
SHEET CHK'D BY:
CROSS CHK'D BY:
APPROVED BY: S. PERRY
DATE: FEBRUARY 2020

CDM Smith
4651 Salisbury Road, Suite 420
Jacksonville, FL 32256
Tel: (904) 731-7109
FL COA No. EB-0000020

JEA

WILSON BLVD. (180-45) AND 118th ST. (180-47)
MASTER PUMP STATION IMPROVEMENTS

WILSON BLVD. MASTER PUMP STATION
LOWER LEVEL AT EL. 5.75'
ELECTRICAL DEMOLITION PLAN

PROJECT NO. 6103-234169
FILE NAME: EWZ002PS.RVT
SHEET NO.
E-8

60% SUBMITTAL - NOT FOR CONSTRUCTION

© 2019 CDM SMITH ALL RIGHTS RESERVED.
REUSE OF DOCUMENTS: THESE DOCUMENTS AND DESIGNS PROVIDED BY PROFESSIONAL SERVICE, INCORPORATED HEREIN, ARE THE PROPERTY OF CDM SMITH AND ARE NOT TO BE USER, IN WHOLE OR PART, FOR ANY OTHER PROJECT WITHOUT THE WRITTEN AUTHORIZATION OF CDM SMITH.

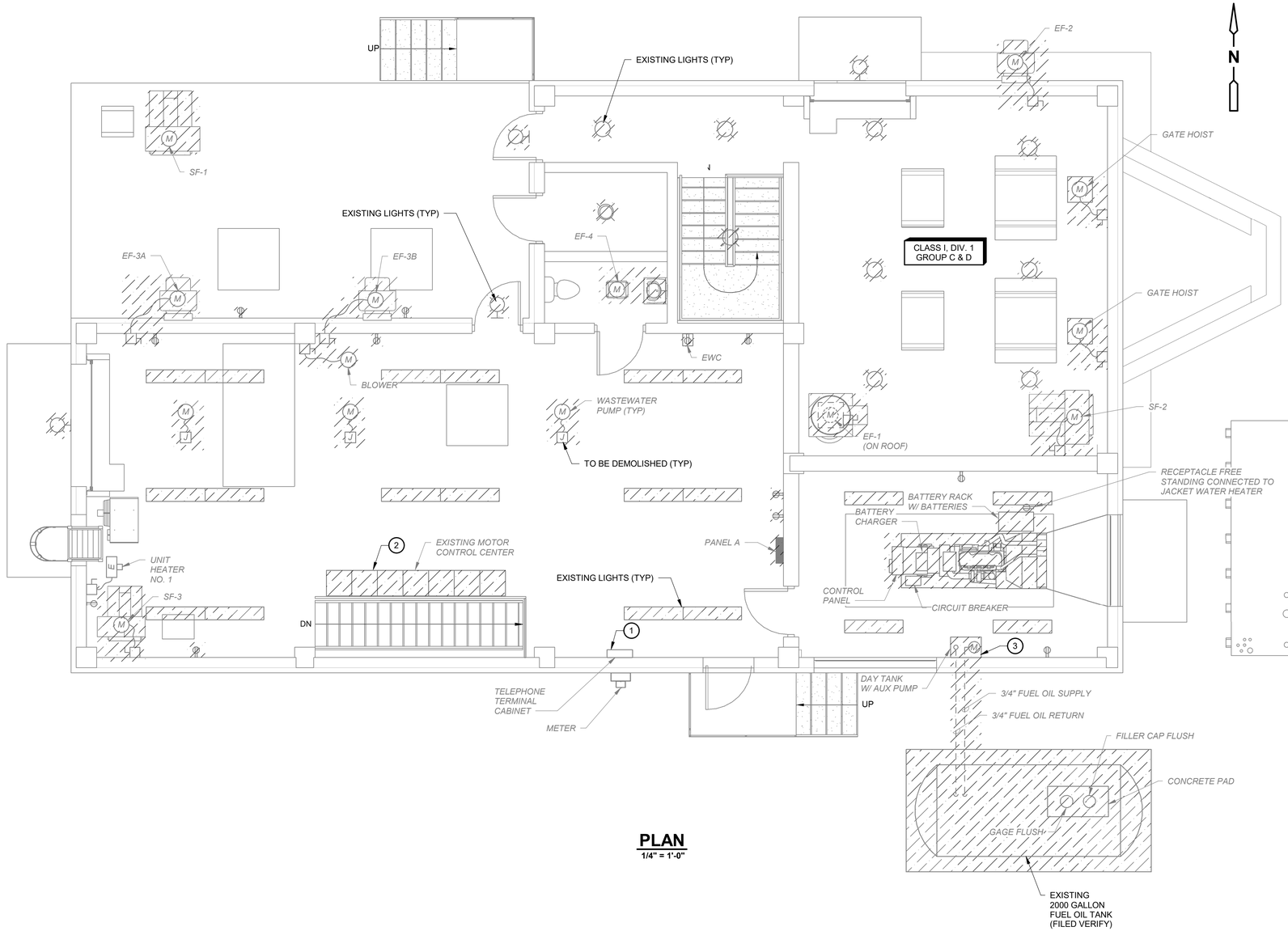


**PLAN**
1/4" = 1'-0"

## (#) KEYED NOTES:

1. RELOCATE CONTENTS OF EXISTING TELEPHONE TERMINAL CABINET TO NETWORK RACK. DEMOLISH CABINET, PATCH AND REPAIR ASSOCIATED PENETRATIONS.
2. COORDINATE SEQUENCE OF DEMOLITION FOR MOTOR CONTROL CENTER AND ASSOCIATED SERVICE WITH OWNER AND GENERAL CONTRACTOR.
3. DEMOLITION EXISTING FUEL SYSTEM AND ASSOCIATION ELECTRICAL. REPAIR ASSOCIATED RACEWAY SYSTEMS AND INSTALL PULLSTRING FOR REUSE OF CONDUITS WITH NEW FUEL SYSTEM.

DATE:
SPENCER J. PERRY JR
PE NO. 62587

| REV. NO. | DATE | DRWN | CHKD | REMARKS |
|---|---|---|---|---|

DESIGNED BY: O. CRUZ
DRAWN BY: R. RUCK
SHEET CHK'D BY:
CROSS CHK'D BY:
APPROVED BY: S. PERRY
DATE: FEBRUARY 2020

CDM Smith
4651 Salisbury Road, Suite 420
Jacksonville, FL 32256
Tel: (904) 731-7109
FL COA No. EB-0000020

JEA

WILSON BLVD. (180-45) AND 118th ST. (180-47)
MASTER PUMP STATION IMPROVEMENTS

WILSON BLVD. MASTER PUMP STATION
UPPER LEVEL AT EL. 12.00'
ELECTRICAL DEMOLITION PLAN

PROJECT NO. 6103-234169
FILE NAME: EWZ002PS.RVT
SHEET NO.
E-9

60% SUBMITTAL - NOT FOR CONSTRUCTION

© 2019 CDM SMITH ALL RIGHTS RESERVED.
REUSE OF DOCUMENTS: THESE DOCUMENTS AND DESIGNS PROVIDED BY PROFESSIONAL SERVICE, INCORPORATED HEREIN, ARE THE PROPERTY OF CDM SMITH AND ARE NOT TO BE USER, IN WHOLE OR PART, FOR ANY OTHER PROJECT WITHOUT THE WRITTEN AUTHORIZATION OF CDM SMITH.

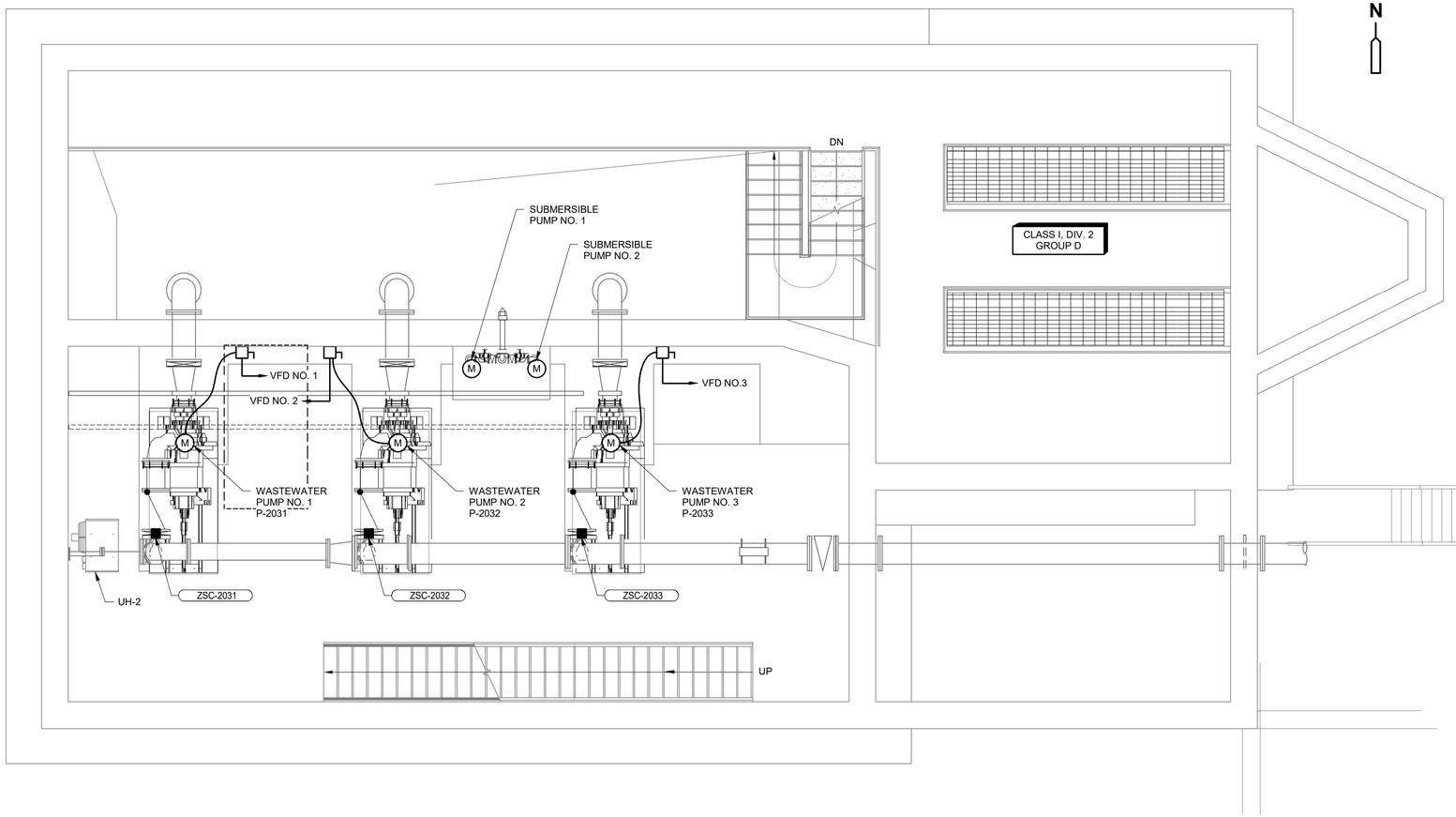


**PLAN**
1/4" = 1'-0"

DATE:
SPENCER J. PERRY JR
PE NO. 62587

| REV. NO. | DATE | DRWN | CHKD | REMARKS |
|---|---|---|---|---|
| | | | | |

DESIGNED BY: O. CRUZ
DRAWN BY: R. RUCK
SHEET CHK'D BY:
CROSS CHK'D BY:
APPROVED BY: S. PERRY
DATE: FEBRUARY 2020

CDM Smith
4651 Salisbury Road, Suite 420
Jacksonville, FL 32256
Tel: (904) 731-7109
FL COA No. EB-0000020

JEA

WILSON BLVD. (180-45) AND 118th ST. (180-47)
MASTER PUMP STATION IMPROVEMENTS

WILSON BLVD. MASTER PUMP STATION
LOWER LEVEL AT EL. 5.75'
POWER PLAN

PROJECT NO. 6103-234169
FILE NAME: EWZ002PS.RVT

SHEET NO.
E-10

60% SUBMITTAL - NOT FOR CONSTRUCTION

© 2019 CDM SMITH ALL RIGHTS RESERVED.
REUSE OF DOCUMENTS: THEESE DOCUMENTS AND DESIGNS PROVIDED BY PROFESSIONAL SERVICE, INCORPORATED HEREIN, ARE THE PROPERTY OF CDM SMITH AND ARE NOT TO BE USER, IN WHOLE OR PART, FOR ANY OTHER PROJECT WITHOUT THE WRITTEN AUTHORIZATION OF CDM SMITH.

**NOTES:**

1. COORDINATE ALL ELECTRICAL WORK WITH WORK BEING PERFORMED BY OTHER CONTRACTORS.
2. DISCONNECT SWITCHES FOR SUPPLY AND EXHAUST FANS ARE PROVIDED BY THE HVAC CONTRACTOR AND WIRED BY THE ELECTRICAL CONTRACTOR. EXCEPTION: EF-3 (BATHROOM EXHAUST FAN). WALL SWITCH SHALL BE PROVIDED BY THE ELECTRICAL CONTRACTOR.

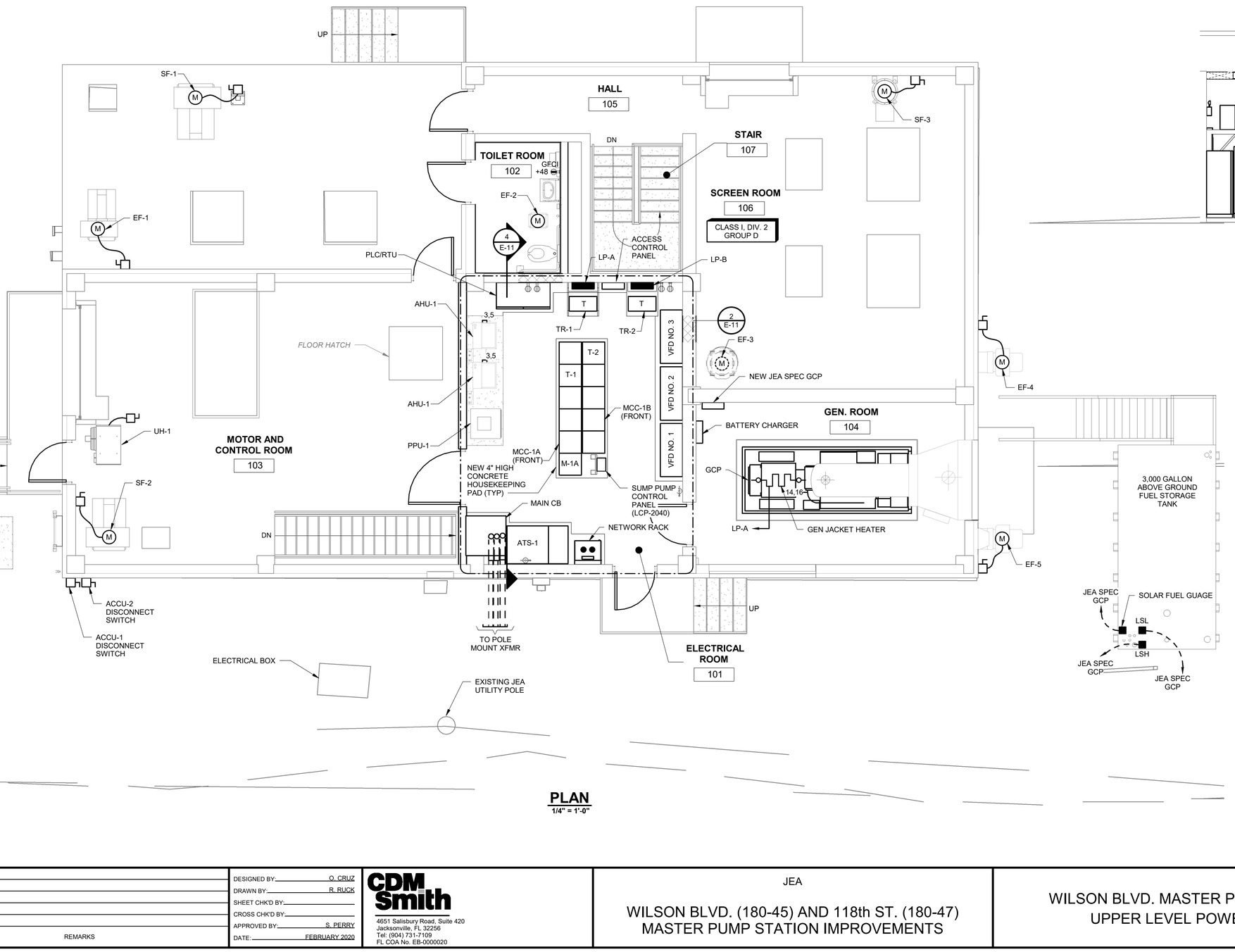


## PLAN
1/4" = 1'-0"

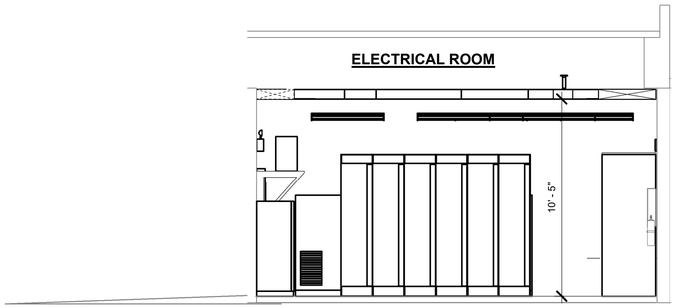


SECTION 1/4" = 1'-0" — 1 / E-11

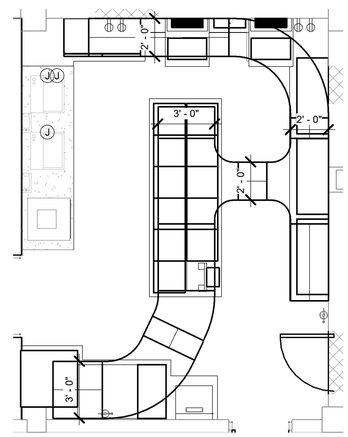


2 / E-11 CABLE TRAY LAYOUT PLAN
1/4" = 1'-0"

DATE:
SPENCER J. PERRY JR
PE NO. 62587

| REV. NO. | DATE | DRWN | CHKD | REMARKS |
|---|---|---|---|---|
| | | | | |

DESIGNED BY: O. CRUZ
DRAWN BY: R. RUCK
SHEET CHK'D BY:
CROSS CHK'D BY:
APPROVED BY: S. PERRY
DATE: FEBRUARY 2020

CDM Smith
4651 Salisbury Road, Suite 420
Jacksonville, FL 32256
Tel: (904) 731-7109
FL COA No. EB-0000020

JEA

WILSON BLVD. (180-45) AND 118th ST. (180-47)
MASTER PUMP STATION IMPROVEMENTS

WILSON BLVD. MASTER PUMP STATION
UPPER LEVEL POWER PLAN

PROJECT NO. 6103-234169
FILE NAME: EWZ002PS.RVT

SHEET NO.
E-11

60% SUBMITTAL - NOT FOR CONSTRUCTION

© 2019 CDM SMITH ALL RIGHTS RESERVED.
REUSE OF DOCUMENTS: THESE DOCUMENTS AND DESIGNS PROVIDED BY PROFESSIONAL SERVICE, INCORPORATED HEREIN, ARE THE PROPERTY OF CDM SMITH AND ARE NOT TO BE USED IN WHOLE OR PART, FOR ANY OTHER PROJECT WITHOUT THE WRITTEN AUTHORIZATION OF CDM SMITH.

**NOTE:**

1. EMERGENCY EGRESS LIGHT FIXTURE 'EMW' AND 'EMX' SHALL BE WIRED TO THE NORMAL LIGHTING CIRCUIT OF THE ROOM IT SERVES AND TO THE LINE-SIDE OF THE LIGHT SWITCH.

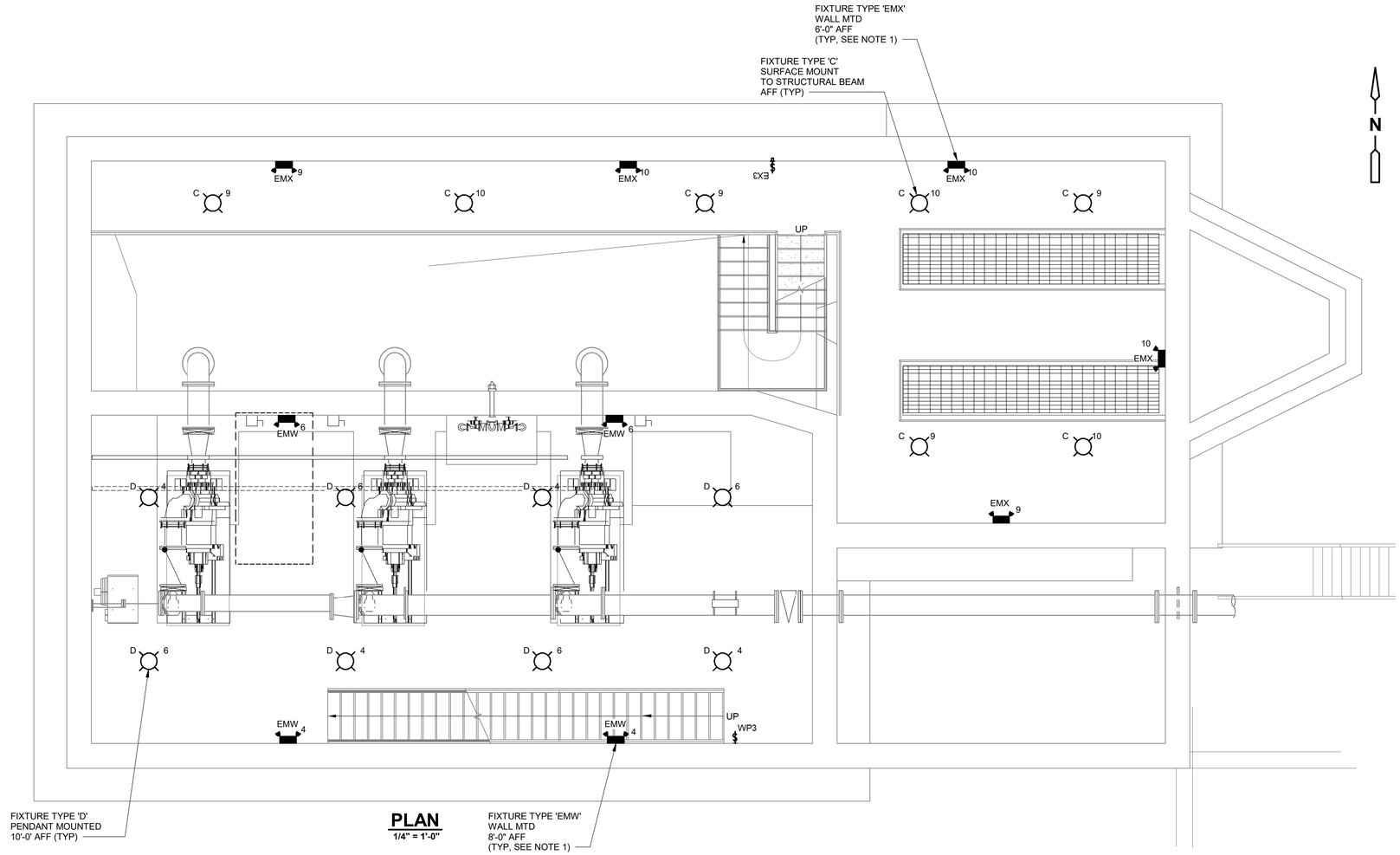


**PLAN**
**1/4" = 1'-0"**

DATE:
SPENCER J. PERRY JR
PE NO. 62587

| REV. NO. | DATE | DRWN | CHKD | REMARKS |
|---|---|---|---|---|
| | | | | |

DESIGNED BY: O. CRUZ
DRAWN BY: R. RUCK
SHEET CHK'D BY:
CROSS CHK'D BY:
APPROVED BY: S. PERRY
DATE: FEBRUARY 2020

CDM Smith
4651 Salisbury Road, Suite 420
Jacksonville, FL 32256
Tel: (904) 731-7109
FL COA No. EB-0000020

JEA

WILSON BLVD. (180-45) AND 118th ST. (180-47)
MASTER PUMP STATION IMPROVEMENTS

WILSON BLVD. MASTER PUMP STATION
LOWER LEVEL AT EL. 5.75'
LIGHTING PLAN

PROJECT NO. 6103-234169
FILE NAME: EWZ002PS.RVT

SHEET NO.
E-12

60% SUBMITTAL - NOT FOR CONSTRUCTION

© 2019 CDM SMITH ALL RIGHTS RESERVED.
REUSE OF DOCUMENTS: THESE DOCUMENTS AND DESIGNS PROVIDED BY PROFESSIONAL SERVICE, INCORPORATED HEREIN, ARE THE PROPERTY OF CDM SMITH AND ARE NOT TO BE USER, IN WHOLE OR PART, FOR ANY OTHER PROJECT WITHOUT THE WRITTEN AUTHORIZATION OF CDM SMITH.

## NOTES:

1. EXIT SIGNS 'EX' AND 'EXX' AND EMERGENCY EGRESS LIGHT FIXTURE 'EM' AND 'EMX' SHALL BE WIRED TO THE NORMAL LIGHTING CIRCUIT OF THE ROOM IT SERVES AND TO THE LINE-SIDE OF THE LIGHT SWITCH.
2. STAIRWELL FIXTURE IS NOT SWITCHED AND SHALL REMAIN 'ON' AT ALL TIMES.

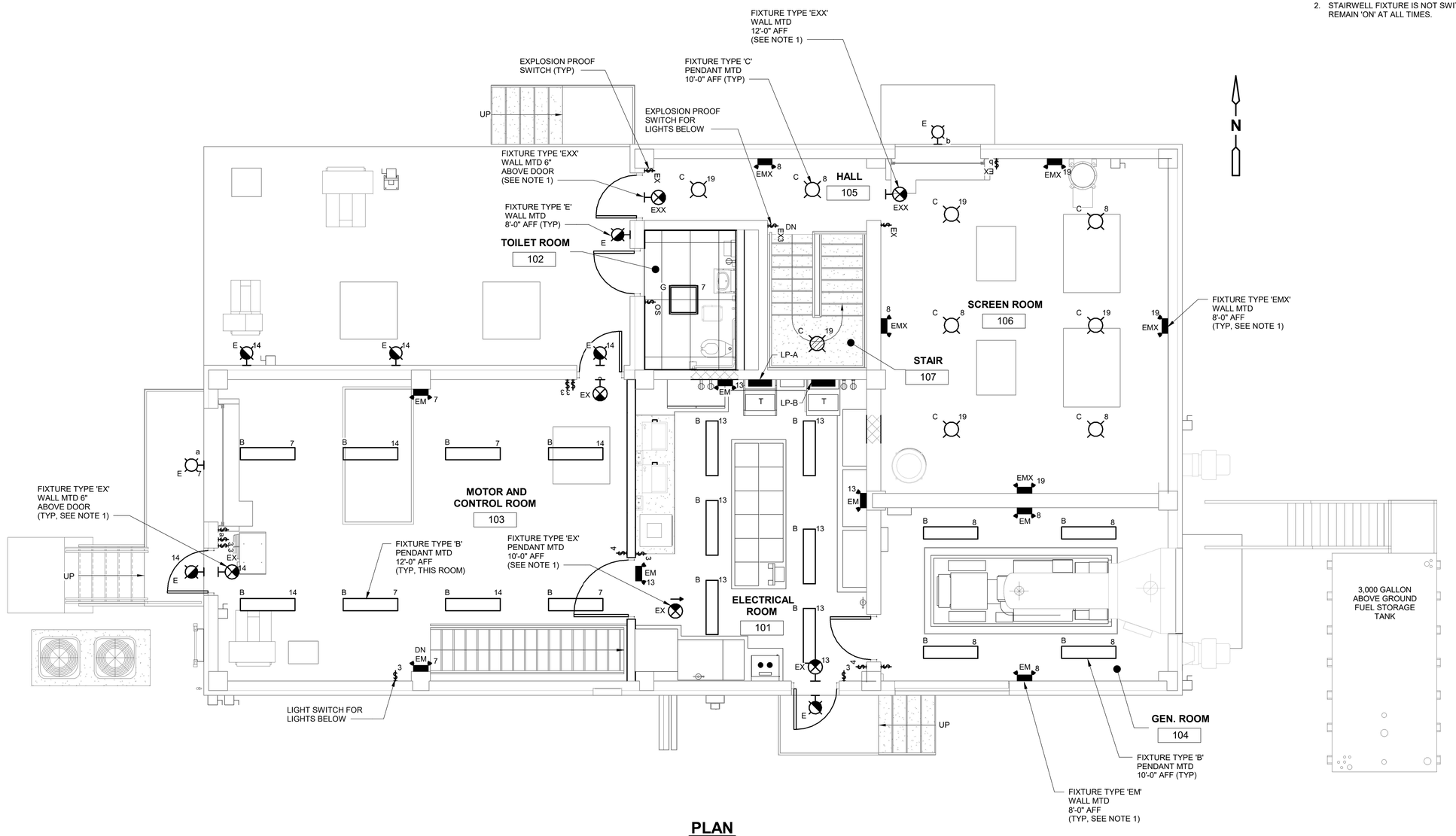


## PLAN
1/4" = 1'-0"

DATE:
SPENCER J. PERRY JR
PE NO. 62587

| REV. NO. | DATE | DRWN | CHKD | REMARKS |
|---|---|---|---|---|

DESIGNED BY: O. CRUZ
DRAWN BY: R. RUCK
SHEET CHK'D BY:
CROSS CHK'D BY:
APPROVED BY: S. PERRY
DATE: FEBRUARY 2020

CDM Smith
4651 Salisbury Road, Suite 420
Jacksonville, FL 32256
Tel: (904) 731-7109
FL COA No. EB-0000020

JEA

WILSON BLVD. (180-45) AND 118th ST. (180-47)
MASTER PUMP STATION IMPROVEMENTS

WILSON BLVD. MASTER PUMP STATION
UPPER LEVEL AT EL. 12.00'
LIGHTING PLAN

PROJECT NO. 6103-234169
FILE NAME: EWZ002PS.RVT

SHEET NO.
E-13

60% SUBMITTAL - NOT FOR CONSTRUCTION

© 2019 CDM SMITH ALL RIGHTS RESERVED.
REUSE OF DOCUMENTS: THEESE DOCUMENTS AND DESIGNS PROVIDED BY PROFESSIONAL SERVICE, INCORPORATED HEREIN, ARE THE PROPERTY OF CDM SMITH AND ARE NOT TO BE USED IN WHOLE OR PART, FOR ANY OTHER PROJECT WITHOUT THE WRITTEN AUTHORIZATION OF CDM SMITH.

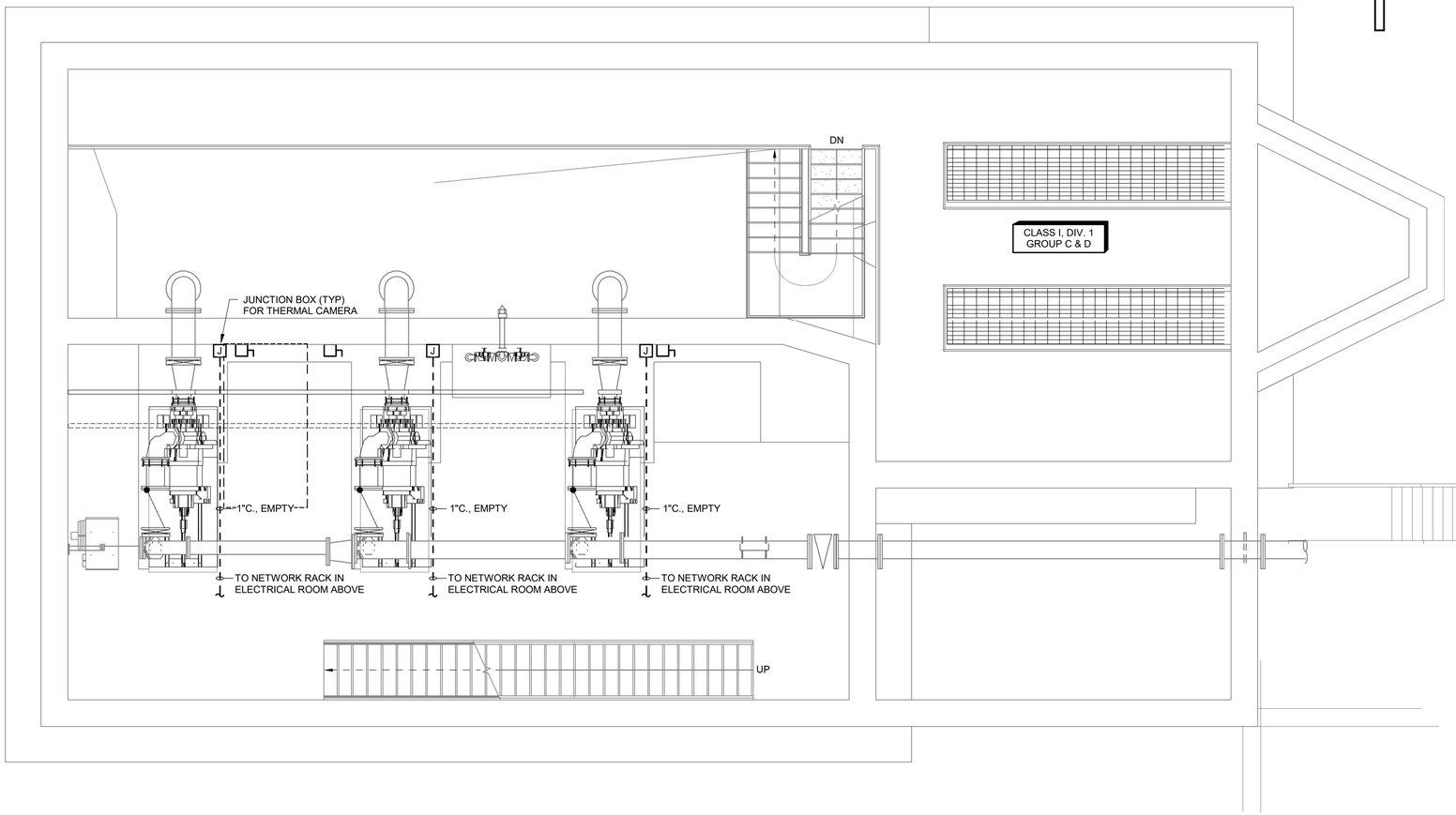


## PLAN
1/4" = 1'-0"

| REV. NO. | DATE | DRWN | CHKD | REMARKS |
|---|---|---|---|---|
| | | | | |

DESIGNED BY: O. CRUZ
DRAWN BY: R. RUCK
SHEET CHK'D BY:
CROSS CHK'D BY:
APPROVED BY: S. PERRY
DATE: FEBRUARY 2020

CDM Smith
4651 Salisbury Road, Suite 420
Jacksonville, FL 32256
Tel: (904) 731-7109
FL COA No. EB-0000020

JEA

WILSON BLVD. (180-45) AND 118th ST. (180-47)
MASTER PUMP STATION IMPROVEMENTS

WILSON BLVD. MASTER PUMP STATION
LOWER LEVEL AT EL. 5.75'
SECURITY SYSTEM PLAN

PROJECT NO. 6103-234169
FILE NAME: EWZ002PS.RVT

SHEET NO.
E-14

60% SUBMITTAL - NOT FOR CONSTRUCTION

© 2019 CDM SMITH ALL RIGHTS RESERVED.
REUSE OF DOCUMENTS: THESE DOCUMENTS AND DESIGNS PROVIDED BY PROFESSIONAL SERVICE, INCORPORATED HEREIN, ARE THE PROPERTY OF CDM SMITH AND ARE NOT TO BE USER, IN WHOLE OR PART, FOR ANY OTHER PROJECT WITHOUT THE WRITTEN AUTHORIZATION OF CDM SMITH.

## (#) KEYED NOTES:

1. PROVIDE ALL RACEWAY INFRASTRUCTURE FOR THE ACCESS CONTROL SYSTEM. COORDINATE WITH JEA PRIOR TO INSTALLATION.
2. COORDINATE LOCATION WITH JEA PRIOR TO INSTALLATION.
3. PROVIDE JUNCTION BOX ABOVE SUSPENDED CEILING TO ALL FIELD NETWORK CONDUITS. THE JUNCTION BOX SHALL BE SIZED IN ACCORDANCE WITH THE NEC.
4. PROVIDE ALL RACEWAY INFRASTRUCTURE FOR THE CCTV SYSTEM. COORDINATE LOCATION WITH JEA PRIOR TO INSTALLATION.

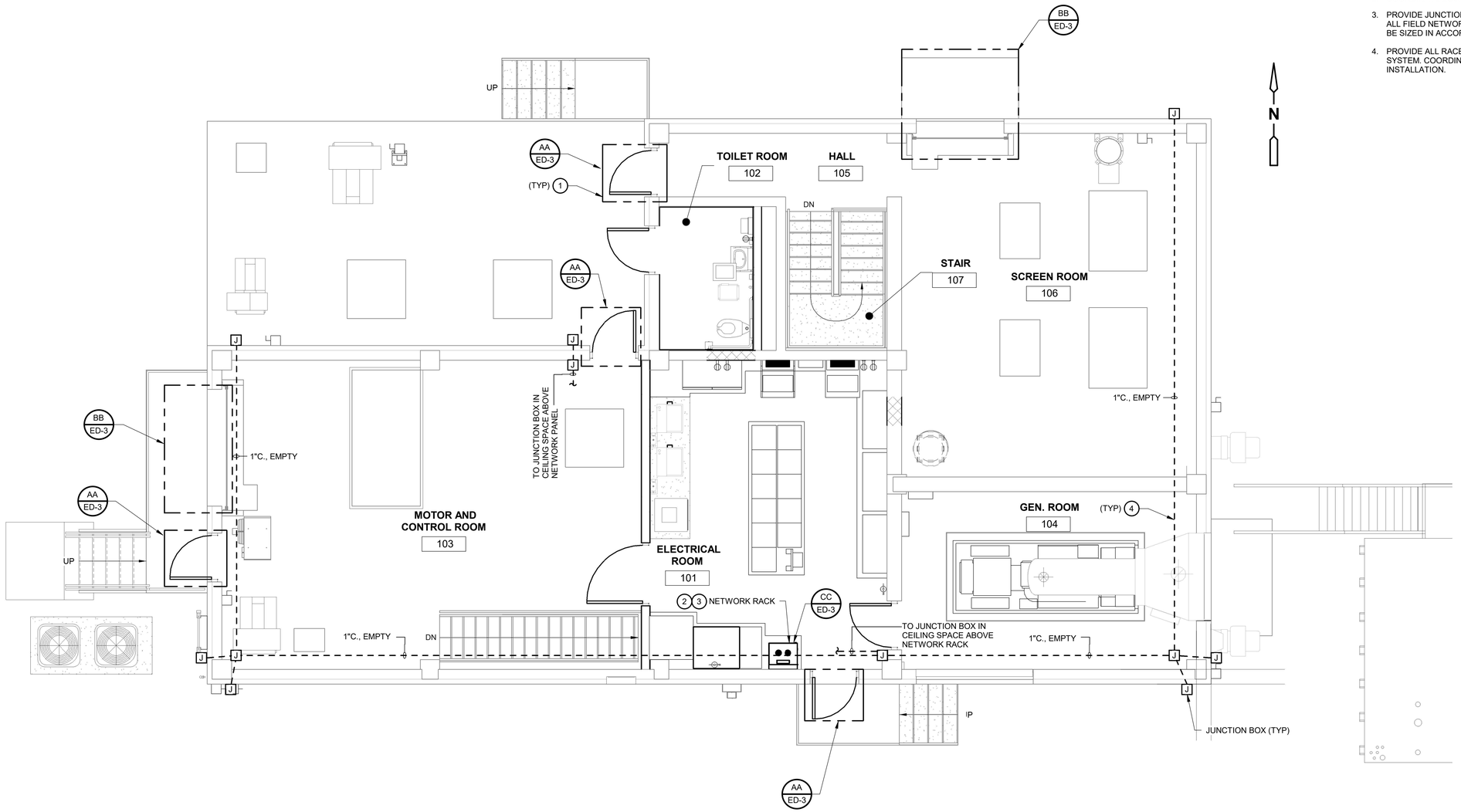


**PLAN**
1/4" = 1'-0"

DATE:
SPENCER J. PERRY JR
PE NO. 62587

| REV. NO. | DATE | DRWN | CHKD | REMARKS |
|---|---|---|---|---|

DESIGNED BY: O. CRUZ
DRAWN BY: R. RUCK
SHEET CHK'D BY:
CROSS CHK'D BY:
APPROVED BY: S. PERRY
DATE: FEBRUARY 2020

CDM Smith
4651 Salisbury Road, Suite 420
Jacksonville, FL 32256
Tel: (904) 731-7109
FL COA No. EB-0000020

JEA

WILSON BLVD. (180-45) AND 118th ST. (180-47)
MASTER PUMP STATION IMPROVEMENTS

WILSON BLVD. MASTER PUMP STATION
UPPER LEVEL AT EL. 12.00'
SECURITY SYSTEM PLAN

PROJECT NO. 6103-234169
FILE NAME: EWZ002PS.DWG

SHEET NO.
E-15

60% SUBMITTAL - NOT FOR CONSTRUCTION

XREFs: [CDMS_2234, CEP001SS, CWZ003ST, AWZ001PS, MWP003PS, HWZ001PS – Floor Plan – 01 HVAC PLAN_EXP, EWZ002PS] Images: []
Last saved by: RUCKRM Time: 2/14/2020 5:07:07 PM
pw:\\cdmsmith-az02-pw.bentley.com:PW_XM1\6103\234169 JEA PDB\04 Design Services NM_60%\09 Electrical\10 CADD\E016STPL.dwg
©2020 CDM SMITH ALL RIGHTS RESERVED.
REUSE OF DOCUMENTS: THESE DOCUMENTS AND DESIGNS PROVIDED BY PROFESSIONAL SERVICE, INCORPORATED HEREIN, ARE THE PROPERTY OF CDM SMITH AND ARE NOT TO BE USED, IN WHOLE OR PART, FOR ANY OTHER PROJECT WITHOUT THE WRITTEN AUTHORIZATION OF CDM SMITH.

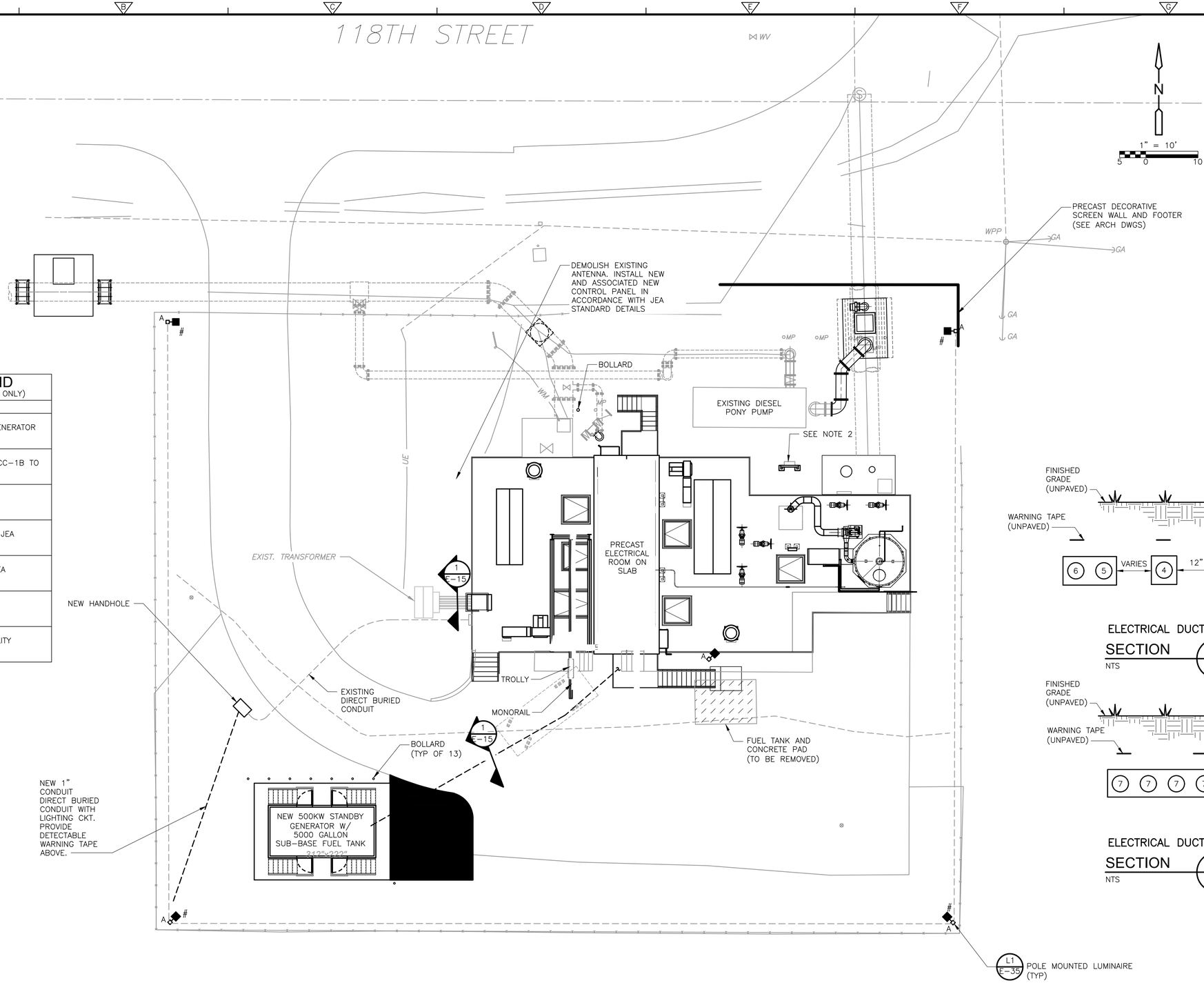


PLAN

## DUCTBANK LEGEND
(NUMBERS REFERENCE THIS SHEET ONLY)

| NO. | DESCRIPTION |
|---|---|
| 1 | 4"C., 480V FEEDERS FROM GENERATOR TO MCC-1B |
| 2 | 4"C., 480V FEEDERS FROM MCC-1B TO GENERATOR LOAD CENTER |
| 3 | 4"C., SPARE WITH PULLSTRING |
| 4 | 1"C., WITH CONTROL WIRE TO JEA GENERATOR CONTROL PANEL |
| 5 | 1"C., WITH SIGNAL WIRE TO JEA GENERATOR CONTROL PANEL |
| 6 | 1"C., SPARE WITH PULLSTRING |
| 7 | 4"C., FEEDERS FROM JEA UTILITY TRANSFORMER TO SE MCB |

NOTES:

1. REFER TO ONE LINE DIAGRAMS FOR ADDITIONAL INFORMATION ON CABLE AND CONDUIT COMBINATIONS.

## GENERAL NOTES:

A. DO NOT SCALE THE ELECTRICAL DRAWINGS REFER TO THE CIVIL, MECHANICAL, STRUCTURAL DRAWINGS, AND APPROVED MANUFACTURER'S SHOP DRAWINGS FOR THE EXACT LOCATION OF ALL EQUIPMENT.

B. ALL WORK SHALL COMPLY WITH NEC AND LOCAL CODES.

C. CONDUCTORS SHALL NOT BE SPLICED EXCEPT AS NOTED IN SPECS.

D. ALL CONDUITS SHALL HAVE A BOND WIRE SIZED PER TABLE 250.122 OF THE NEC (UNLESS OTHERWISE NOTED).

E. CONTRACTOR SHALL FIELD VERIFY EXISTING UNDERGROUND UTILITIES, PIPING, ETC. REROUTE NEW CONDUITS, DUCTBANK, MANHOLES, PULL BOXES, ETC., AS REQUIRED AT NO ADDITIONAL COST TO THE OWNER.

## NOTE:

1. DEMOLISH EXISTING ABOVE GROUND STORAGE TANK AND ASSOCIATED PIPING FROM TANK TO EQUIPMENT. PATCH AND REPAIR ALL PIPE PENETRATIONS.

2. RELOCATE EXISTING PONY PUMP DISTRIBUTED I/O PANEL TO THE NEW RACK INSTALLATION. RECONNECT EXISTING WIRING AND CONDUIT SYSTEM TO PONY PUMP AND FIELD DEVICES. PROVIDE NEW CONDUIT AND WIRING FROM PONY PUMP DISTRIBUTED I/O TO PLC/RTU.




| REV. NO. | DATE | DRWN | CHKD | REMARKS |
|---|---|---|---|---|

DESIGNED BY: O. CRUZ
DRAWN BY: R. RUCK
SHEET CHK'D BY: X
CROSS CHK'D BY: X
APPROVED BY: S. PERRY
DATE: FEBRUARY 2020

CDM Smith
4651 Salisbury Road, Suite 420
Jacksonville, FL 32256
Tel: (904) 731-7109
FL COA No. EB-0000020

JEA

WILSON BLVD. (180-45) AND 118th ST. (180-47)
MASTER PUMP STATION IMPROVEMENTS

118TH ST. PUMP STATION
ELECTRICAL SITE PLAN

DATE:
SPENCER J. PERRY JR
PE NO. 62587

PROJECT NO. 6103-234169
FILE NAME: E016STPL.DWG

SHEET NO.
E-16

60% SUBMITTAL - NOT FOR CONSTRUCTION

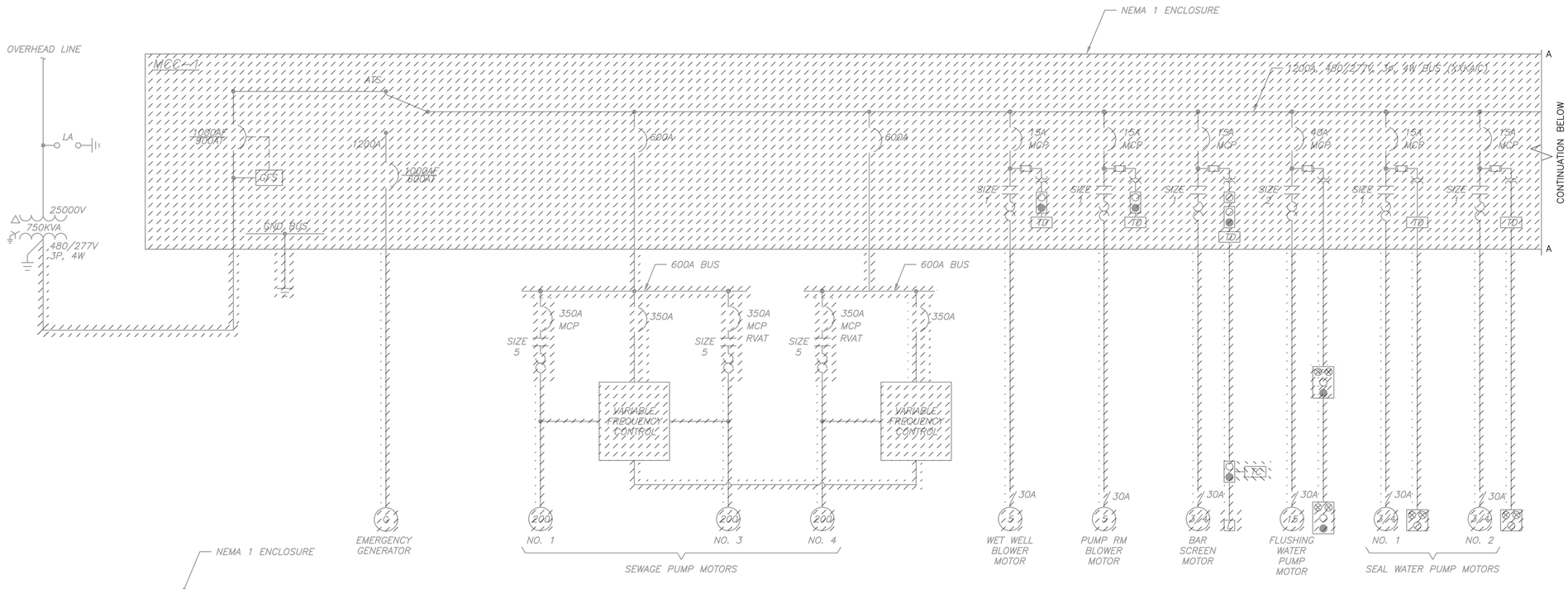


EXISTING MCC-1

## ONE LINE POWER DIAGRAM

**KEYED NOTES:**

1. xxxxxx

DATE:
SPENCER J. PERRY JR
PE NO. 62587

| REV. NO. | DATE | DRWN | CHKD | REMARKS |
|---|---|---|---|---|

DESIGNED BY: O. CRUZ
DRAWN BY: R. RUCK
SHEET CHK'D BY: X
CROSS CHK'D BY: X
APPROVED BY: S. PERRY
DATE: FEBRUARY 2020

CDM Smith
4651 Salisbury Road, Suite 420
Jacksonville, FL 32256
Tel: (904) 731-7109
FL COA No. EB-0000020

JEA

WILSON BLVD. (180-45) AND 118th ST. (180-47)
MASTER PUMP STATION IMPROVEMENTS

118TH ST. MASTER PUMP STATION
ONE LINE POWER DIAGRAM
DEMOLITION

PROJECT NO. 6103-234169
FILE NAME: E017NFOL.DWG

SHEET NO.
E-17

60% SUBMITTAL - NOT FOR CONSTRUCTION

XREFs: [CDMS_2234] Images: []
Last saved by: RUCKRM Time: 2/14/2020 4:08:21 PM
pw:\\cdmsmith-azo2-pw.bentley.com:PW_XM1\6103\234169 JEA PDB\04 Design Services NM_60%\09 Electrical\10 CADD\E017NFOL.dwg
©2020 CDM SMITH ALL RIGHTS RESERVED.
REUSE OF DOCUMENTS: THESE DOCUMENTS AND DESIGNS PROVIDED BY PROFESSIONAL SERVICE, INCORPORATED HEREIN, ARE THE PROPERTY OF CDM SMITH AND ARE NOT TO BE USED, IN WHOLE OR PART, FOR ANY OTHER PROJECT WITHOUT THE WRITTEN AUTHORIZATION OF CDM SMITH.

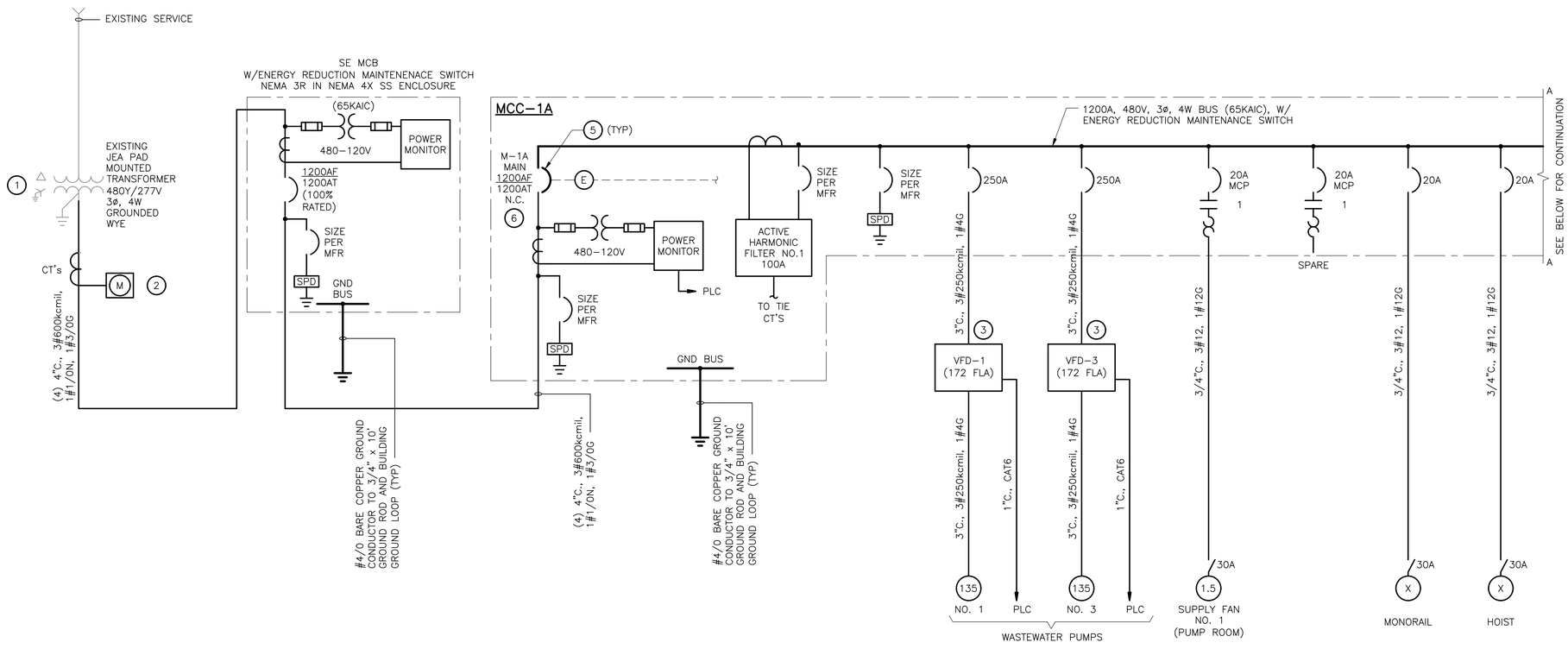


MCC–1A

## ONE LINE POWER DIAGRAM

### KEYED NOTES:

1. THE AVAILABLE FAULT CURRENT AT THE SECONDARY TERMINALS OF THE TRANSFORMER IS XX,XXX AMPS.
2. PROVIDE METER SOCKET AND PEDESTAL PER JEA RULES AND REGULATIONS FOR ELECTRIC SERVICE.
3. THE 6–PULSE VFD SHALL BE EQUIPPED WITH AN INTEGRATED INPUT LINE REACTOR (MINIMUM 5%) AND DV/DT OUTPUT FILTER. REFER TO SECTION 262923 VARIABLE FREQUENCY MOTOR CONTROLLERS FOR ADDITIONAL REQUIREMENTS.
4. NOT USED..
5. ALL CIRCUIT BREAKERS RATED 400A AND LARGER SHALL BE 100% RATED.
6. PROVIDE SIGNAGE INDICATING THAT EQUIPMENT IS FED FROM AN EXTERNAL SOURCE "SE MCB".

### NOTE:

1. CIRCUIT BREAKERS M–1A, TIE, AND M–1B SHALL BE ELECTRICALLY AND MECHANICALLY INTERLOCKED. CONTROL OF CIRCUIT BREAKER OPERATION SHALL BE VIA AN HMI WITHIN THE MOTOR CONTROL CENTER. REDUNDANT HARDWIRED PISTOL GRIP SWITCHES SHALL BE PROVIDED ON DOOR OF CONTROL SECTION FOR MANUAL CONTROL OF CIRCUIT BREAKERS IN THE EVENT OF HMI SCREEN FAILURE.

DATE:
SPENCER J. PERRY JR
PE NO. 62587

| REV. NO. | DATE | DRWN | CHKD | REMARKS |
|---|---|---|---|---|

DESIGNED BY: O. CRUZ
DRAWN BY: R. RUCK
SHEET CHK'D BY: X
CROSS CHK'D BY: X
APPROVED BY: S. PERRY
DATE: FEBRUARY 2020

CDM Smith
4651 Salisbury Road, Suite 420
Jacksonville, FL 32256
Tel: (904) 731-7109
FL COA No. EB-0000020

JEA

WILSON BLVD. (180-45) AND 118th ST. (180-47)
MASTER PUMP STATION IMPROVEMENTS

118TH ST. MASTER PUMP STATION
MCC-1A ONE LINE POWER DIAGRAM

PROJECT NO. 6103–234169
FILE NAME: E018NFOL.DWG

SHEET NO.
E-18

60% SUBMITTAL - NOT FOR CONSTRUCTION

xREFs: [CDMS_2234] Images: []
Last saved by: CRUZOD Time: 2/24/2020 10:52:09 AM
pw:\\cdmsmith-az02-pw.bentley.com:PW_XM1\6103\234169 JEA PDB\04 Design Services NM_60%\09 Electrical\10 CADD\E018NFOL.dwg
© 2020 CDM SMITH ALL RIGHTS RESERVED.
REUSE OF DOCUMENTS: THESE DOCUMENTS AND DESIGNS PROVIDED BY PROFESSIONAL SERVICE, INCORPORATED HEREIN, ARE THE PROPERTY OF CDM SMITH AND ARE NOT TO BE USED, IN WHOLE OR PART, FOR ANY OTHER PROJECT WITHOUT THE WRITTEN AUTHORIZATION OF CDM SMITH.

XREFs: [CDMS_2234] Images: []
Last saved by: CRUZOD Time: 2/24/2020 10:52:18 AM
pw:\\cdmsmith-azO2-pw.bentley.com:PW_XM1\6103\234169 JEA PDB\04 Design Services NM_608\09 Electrical\10 CADD\E019NFOL.dwg
©2020 CDM SMITH ALL RIGHTS RESERVED.
REUSE OF DOCUMENTS: THESE DOCUMENTS AND DESIGNS PROVIDED BY PROFESSIONAL SERVICE, INCORPORATED HEREIN, ARE THE PROPERTY OF CDM SMITH AND ARE NOT TO BE USED, IN WHOLE OR PART, FOR ANY OTHER PROJECT WITHOUT THE WRITTEN AUTHORIZATION OF CDM SMITH.

## KEYED NOTES:

1. THE AVAILABLE FAULT CURRENT AT THE SECONDARY TERMINALS OF THE TRANSFORMER IS XX,XXX AMPS.
2. PROVIDE METER SOCKET AND PEDESTAL PER JEA RULES AND REGULATIONS FOR ELECTRIC SERVICE.
3. THE 6-PULSE VFD SHALL BE EQUIPPED WITH AN INTEGRATED INPUT LINE REACTOR (MINIMUM 5%) AND DV/DT OUTPUT FILTER. REFER TO SECTION 262923 VARIABLE FREQUENCY MOTOR CONTROLLERS FOR ADDITIONAL REQUIREMENTS.
4. NOT USED.
5. ALL CIRCUIT BREAKERS RATED 400A AND LARGER SHALL BE 100% RATED.
6. PROVIDE SIGNAGE INDICATING THAT EQUIPMENT IS POWERED FROM AN EXTERNAL SOURCE "SE MCB".
7. JEA SPECIFIED GENERATOR CONTROL CABINET LOCATED AT GENERATOR ENCLOSURE.

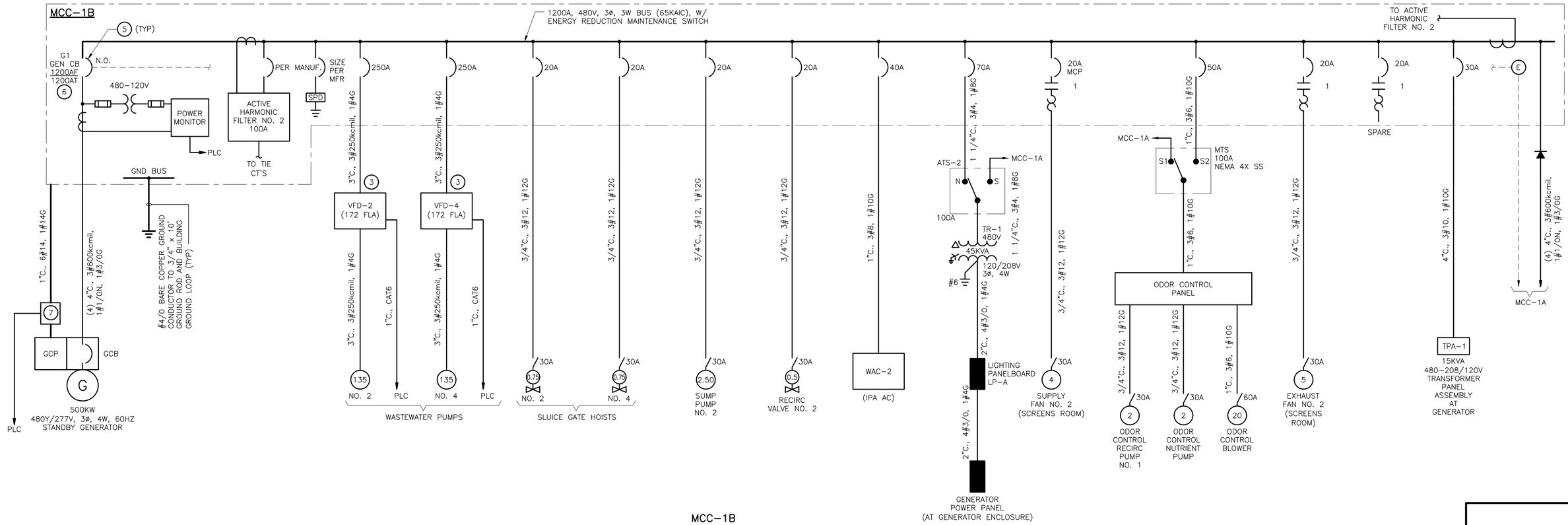


MCC-1B

# ONE LINE POWER DIAGRAM

DATE:
SPENCER J. PERRY JR
PE NO. 62587

| REV. NO. | DATE | DRWN | CHKD | REMARKS |
|---|---|---|---|---|

DESIGNED BY: O. CRUZ
DRAWN BY: R. RUCK
SHEET CHK'D BY: X
CROSS CHK'D BY: X
APPROVED BY: S. PERRY
DATE: FEBRUARY 2020

CDM Smith
4651 Salisbury Road, Suite 420
Jacksonville, FL 32256
Tel: (904) 731-7109
FL COA No. EB-0000020

JEA

WILSON BLVD. (180-45) AND 118th ST. (180-47)
MASTER PUMP STATION IMPROVEMENTS

118TH ST. MASTER PUMP STATION
MCC-1B ONE LINE POWER DIAGRAM

PROJECT NO. 6103-234169
FILE NAME: E019NFOL.DWG

SHEET NO.
E-19

60% SUBMITTAL - NOT FOR CONSTRUCTION

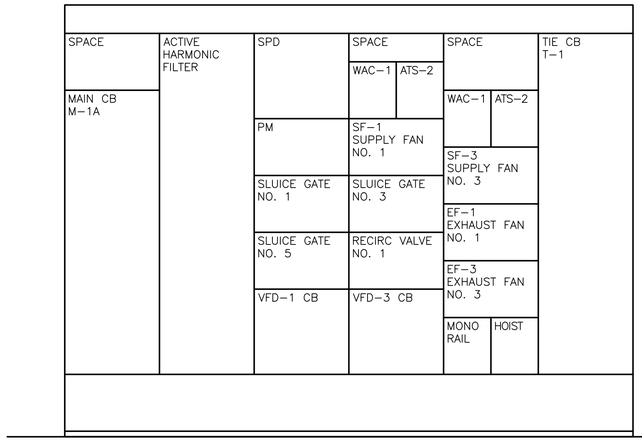


MCC-1A

FRONT ELEVATION

(118TH STREET.)

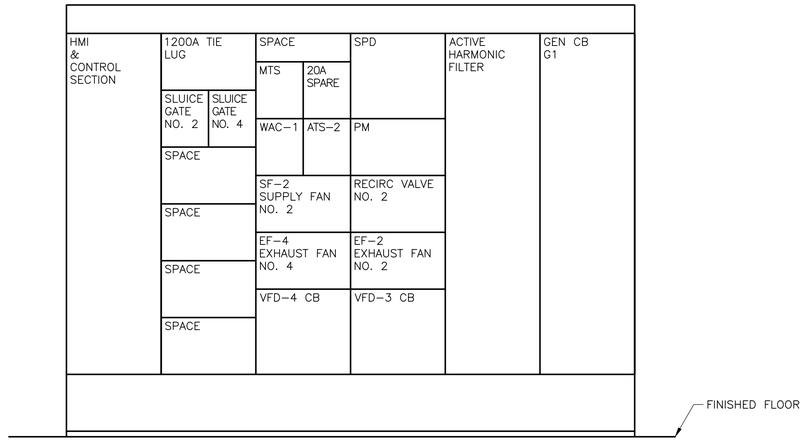


MCC-1B

FRONT ELEVATION

(118TH STREET)

DATE:
SPENCER J. PERRY JR
PE NO. 62587

| REV. NO. | DATE | DRWN | CHKD | REMARKS |
|---|---|---|---|---|

DESIGNED BY: O. CRUZ
DRAWN BY: R. CARTER
SHEET CHK'D BY: X
CROSS CHK'D BY: X
APPROVED BY: S. PERRY
DATE: FEBRUARY 2020

CDM Smith
4651 Salisbury Road, Suite 420
Jacksonville, FL 32256
Tel: (904) 731-7109
FL COA No. EB-0000020

JEA

WILSON BLVD. (180-45) AND 118th ST. (180-47)
MASTER PUMP STATION IMPROVEMENTS

118TH ST. MASTER PUMP STATION
ELECTRICAL EQUIPMENT
FRONT ELEVATIONS

PROJECT NO. 6103-234169
FILE NAME: E02ONFEQ.DWG

SHEET NO.
E-20

60% SUBMITTAL - NOT FOR CONSTRUCTION

XREFs: [CDMS_2234] Images: []
Last saved by: RUCKRM Time: 2/14/2020 4:12:35 PM
pw:\\cdmsmith-a202-pw.bentley.com:PW_XM1\6103\234169 JEA PDB\04 Design Services NM_60#\09 Electrical\10 CADD\E02ONFEQ.dwg
©2020 CDM SMITH ALL RIGHTS RESERVED.
REUSE OF DOCUMENTS: THESE DOCUMENTS AND DESIGNS PROVIDED BY PROFESSIONAL SERVICE, INCORPORATED HEREIN, ARE THE PROPERTY OF CDM SMITH AND ARE NOT TO BE USED, IN WHOLE OR PART, FOR ANY OTHER PROJECT WITHOUT THE WRITTEN AUTHORIZATION OF CDM SMITH.

© 2019 CDM SMITH ALL RIGHTS RESERVED.
REUSE OF DOCUMENTS: THEESE DOCUMENTS AND DESIGNS PROVIDED BY PROFESSIONAL SERVICE, INCORPORATED HEREIN, ARE THE PROPERTY OF CDM SMITH AND ARE NOT TO BE USER, IN WHOLE OR PART, FOR ANY OTHER PROJECT WITHOUT THE WRITTEN AUTHORIZATION OF CDM SMITH.

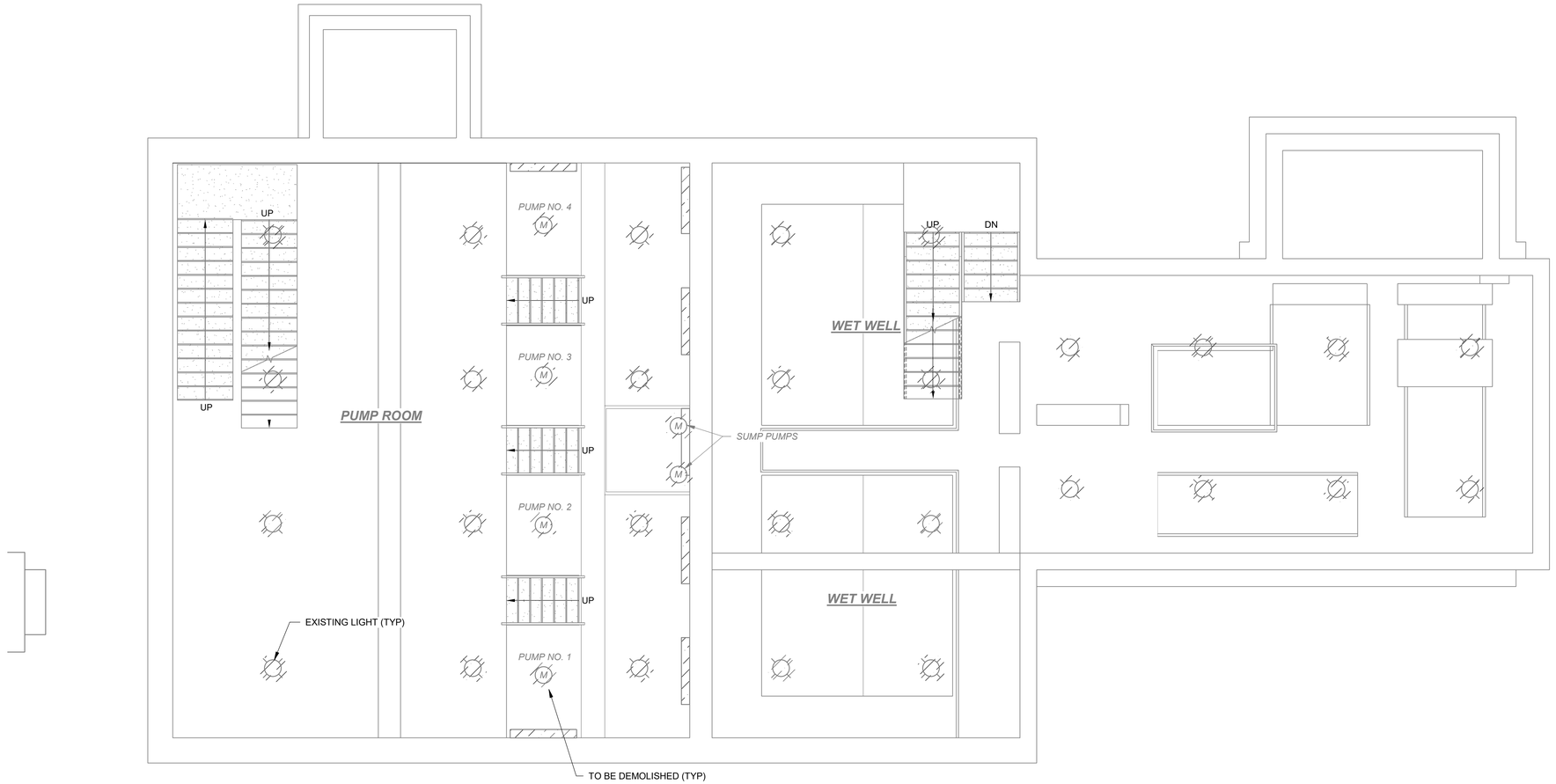


## PLAN
1/4" = 1'-0"

| REV. NO. | DATE | DRWN | CHKD | REMARKS |
|---|---|---|---|---|

DESIGNED BY: O. CRUZ
DRAWN BY: R. RUCK
SHEET CHK'D BY:
CROSS CHK'D BY:
APPROVED BY: S. PERRY
DATE: FEBRUARY 2020

CDM Smith
4651 Salisbury Road, Suite 420
Jacksonville, FL 32256
Tel: (904) 731-7109
FL COA No. EB-0000020

JEA

WILSON BLVD. (180-45) AND 118th ST. (180-47)
MASTER PUMP STATION IMPROVEMENTS

118TH ST. MASTER PUMP STATION
LOWER LEVEL AT EL. -3.50 & -11.69'
ELECTRICAL DEMOLITION PLAN

DATE:
SPENCER J. PERRY JR
PE NO. 62587

PROJECT NO. 6103-234169
FILE NAME: EWZ001PS.RVT

SHEET NO.
E-21

60% SUBMITTAL - NOT FOR CONSTRUCTION

© 2019 CDM SMITH ALL RIGHTS RESERVED.
REUSE OF DOCUMENTS: THEESE DOCUMENTS AND DESIGNS PROVIDED BY PROFESSIONAL SERVICE, INCORPORATED HEREIN, ARE THE PROPERTY OF CDM SMITH AND ARE NOT TO BE USER, IN WHOLE OR PART, FOR ANY OTHER PROJECT WITHOUT THE WRITTEN AUTHORIZATION OF CDM SMITH.

## (#) KEYED NOTE:

1. DEMOLISH ALL ELECTRICAL EQUIPMENT, CONDUIT, WIRE AND ASSOCIATED ELECTRICAL APPURTENANCES ON THIS LEVEL. NOT ALL EQUIPMENT MAY BE SHOWN ON THIS PLAN.

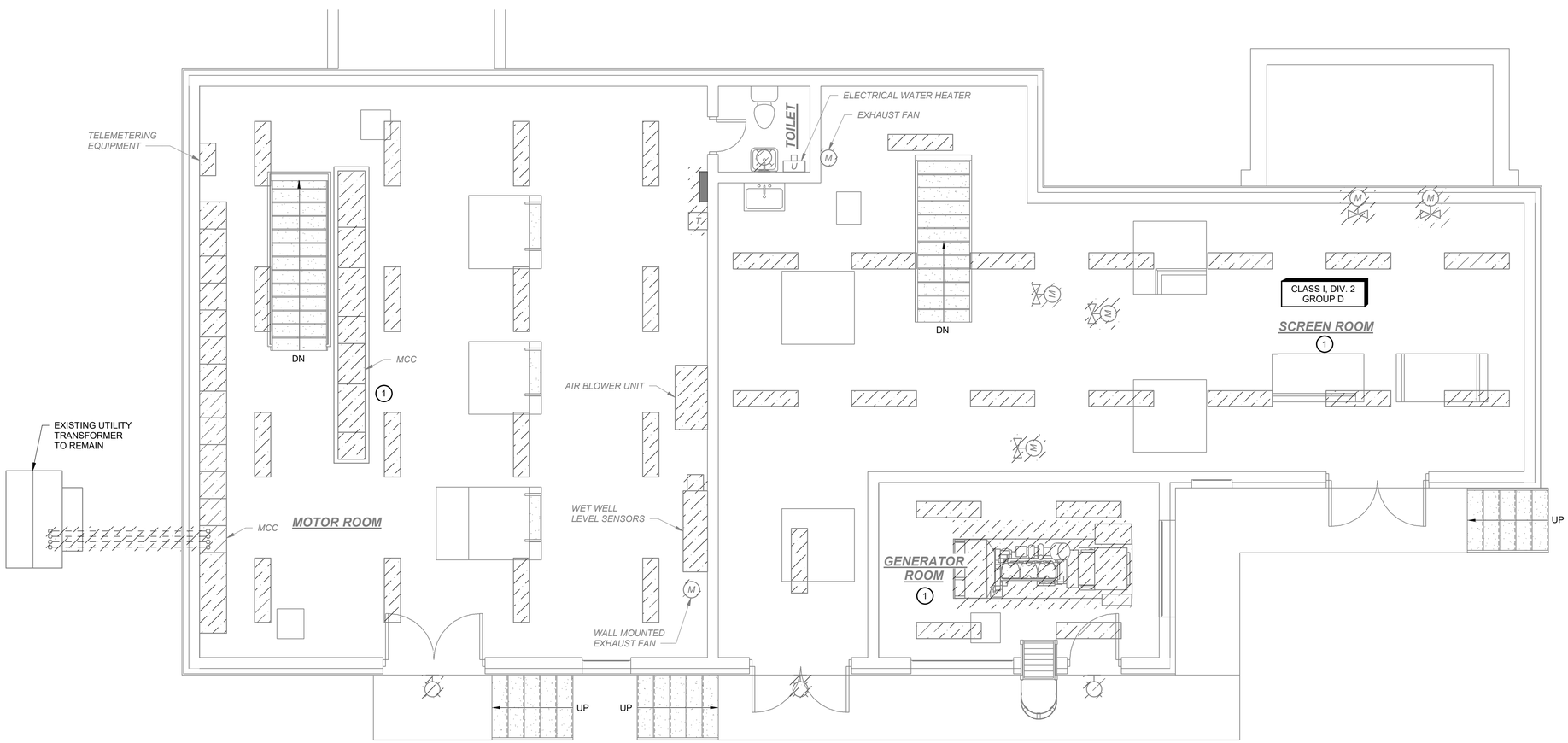


**PLAN**
1/4" = 1'-0"

DATE:
SPENCER J. PERRY JR
PE NO. 62587

| REV. NO. | DATE | DRWN | CHKD | REMARKS |
|---|---|---|---|---|
| | | | | |

DESIGNED BY: O. CRUZ
DRAWN BY: R. RUCK
SHEET CHK'D BY:
CROSS CHK'D BY:
APPROVED BY: S. PERRY
DATE: FEBRUARY 2020

CDM Smith
4651 Salisbury Road, Suite 420
Jacksonville, FL 32256
Tel: (904) 731-7109
FL COA No. EB-0000020

JEA

WILSON BLVD. (180-45) AND 118th ST. (180-47)
MASTER PUMP STATION IMPROVEMENTS

118TH ST. MASTER PUMP STATION
UPPER LEVEL AT EL. 8.00'
ELECTRICAL DEMOLITION PLAN

PROJECT NO. 6103-234169
FILE NAME: EWZ001PS.RVT

SHEET NO.
E-22

60% SUBMITTAL - NOT FOR CONSTRUCTION

© 2019 CDM SMITH ALL RIGHTS RESERVED.
REUSE OF DOCUMENTS: THESE DOCUMENTS AND DESIGNS PROVIDED BY PROFESSIONAL SERVICE, INCORPORATED HEREIN, ARE THE PROPERTY OF CDM SMITH AND ARE NOT TO BE USER, IN WHOLE OR PART, FOR ANY OTHER PROJECT WITHOUT THE WRITTEN AUTHORIZATION OF CDM SMITH.

**# KEYED NOTE:**

1. PROVIDE SUBMERSIBLE TWIST LOCK RECEPTACLES FOR CONNECTION TO NEW SUMP PUMPS.

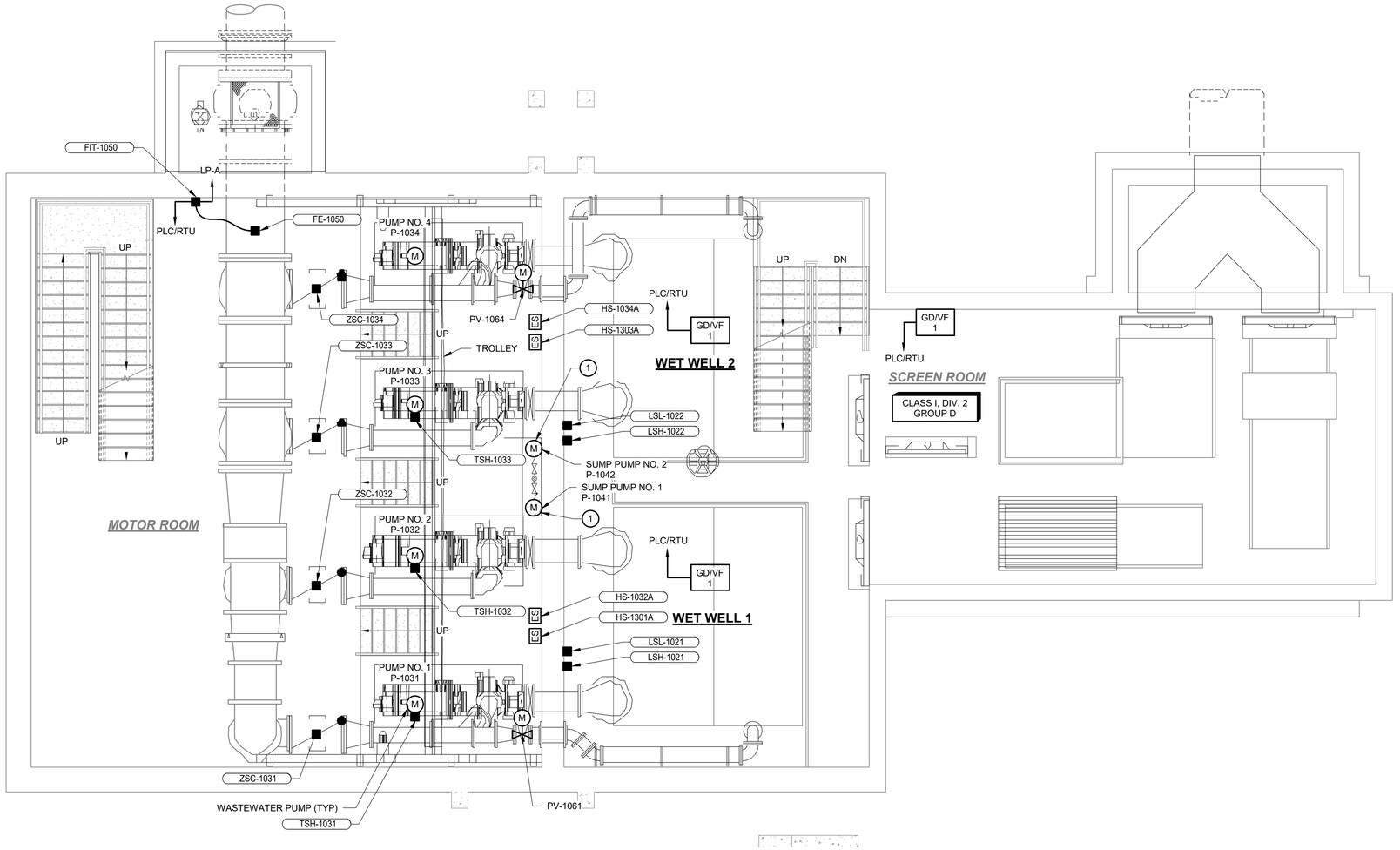


## PLAN
1/4" = 1'-0"

DATE:
SPENCER J. PERRY JR
PE NO. 62587

| REV. NO. | DATE | DRWN | CHKD | REMARKS |
|---|---|---|---|---|

DESIGNED BY: O. CRUZ
DRAWN BY: R. RUCK
SHEET CHK'D BY:
CROSS CHK'D BY:
APPROVED BY: S. PERRY
DATE: FEBRUARY 2020

CDM Smith
4651 Salisbury Road, Suite 420
Jacksonville, FL 32256
Tel: (904) 731-7109
FL COA No. EB-0000020

JEA

WILSON BLVD. (180-45) AND 118th ST. (180-47)
MASTER PUMP STATION IMPROVEMENTS

118TH ST. MASTER PUMP STATION
LOWER LEVEL AT EL. -3.50' & 11.69'
POWER PLAN

PROJECT NO. 6103-234169
FILE NAME: EW2001PS.RVT

SHEET NO.
E-23

60% SUBMITTAL - NOT FOR CONSTRUCTION

© 2019 CDM SMITH ALL RIGHTS RESERVED.
REUSE OF DOCUMENTS: THEESE DOCUMENTS AND DESIGNS PROVIDED BY PROFESSIONAL SERVICE, INCORPORATED HEREIN, ARE THE PROPERTY OF CDM SMITH AND ARE NOT TO BE USER, IN WHOLE OR PART, FOR ANY OTHER PROJECT WITHOUT THE WRITTEN AUTHORIZATION OF CDM SMITH.

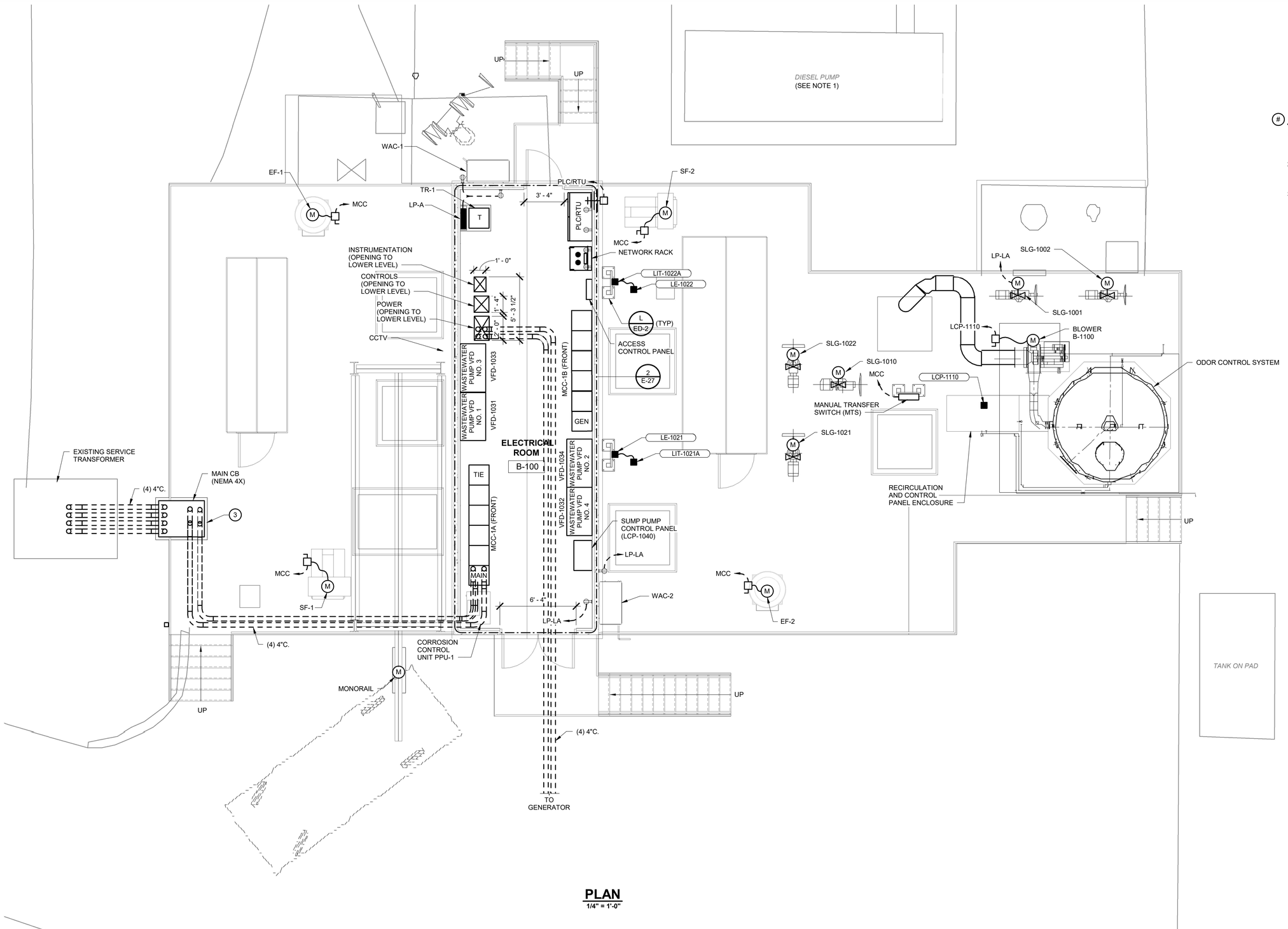


**PLAN**
1/4" = 1'-0"

## # KEYED NOTE:

1. ALL EXISTING EQUIPMENT REQUIRING POWER SHALL BE REWIRED TO NEW POWER PANELS WHETHER OR NOT SHOWN ON PLANS.
2. DISCONNECT SWITCHES ON EXHAUST AND SUPPLY FANS PROVIDED BY HVAC CONTRACTOR. WIRING BY ELECTRICAL CONTRACTOR.
3. PROVIDE CANTILEVERED SUPPORT PLATFORM FOR CIRCUIT BREAKER ENCLOSURE. CIRCUIT BREAKER SHALL BE RAISED A MINIMUM 24" TO BE ABOVE FLOOD ELEVATION. LINE SIDE CIRCUIT BREAKER CONDUITS SHALL BE KEPT OUTSIDE OF THE BUILDING.

| REV. NO. | DATE | DRWN | CHKD | REMARKS |
|---|---|---|---|---|
| | | | | |

DESIGNED BY: O. CRUZ
DRAWN BY: R. RUCK
SHEET CHK'D BY:
CROSS CHK'D BY:
APPROVED BY: S. PERRY
DATE: FEBRUARY 2020

CDM Smith
4651 Salisbury Road, Suite 420
Jacksonville, FL 32256
Tel: (904) 731-7109
FL COA No. EB-0000020

JEA

WILSON BLVD. (180-45) AND 118th ST. (180-47)
MASTER PUMP STATION IMPROVEMENTS

118TH ST. MASTER PUMP STATION
UPPER LEVEL POWER PLAN

DATE:
SPENCER J. PERRY JR
PE NO. 62587

PROJECT NO. 6103-234169
FILE NAME: EWZ0001PS.RVT

SHEET NO.
E-24

60% SUBMITTAL - NOT FOR CONSTRUCTION

© 2019 CDM SMITH ALL RIGHTS RESERVED.
REUSE OF DOCUMENTS: THEESE DOCUMENTS AND DESIGNS PROVIDED BY PROFESSIONAL SERVICE, INCORPORATED HEREIN, ARE THE PROPERTY OF CDM SMITH AND ARE NOT TO BE USER, IN WHOLE OR PART, FOR ANY OTHER PROJECT WITHOUT THE WRITTEN AUTHORIZATION OF CDM SMITH.

## NOTES:

1. EMERGENCY EGRESS LIGHT FIXTURE 'EMW' AND 'EMX' SHALL BE WIRED TO THE NORMAL LIGHTING CIRCUIT OF THE ROOM IT SERVES AND TO THE LINE-SIDE OF THE LIGHT SWITCH.
2. STAIRWELL FIXTURE IS NOT SWITCHED AND SHALL REMAIN 'ON' AT ALL TIMES.

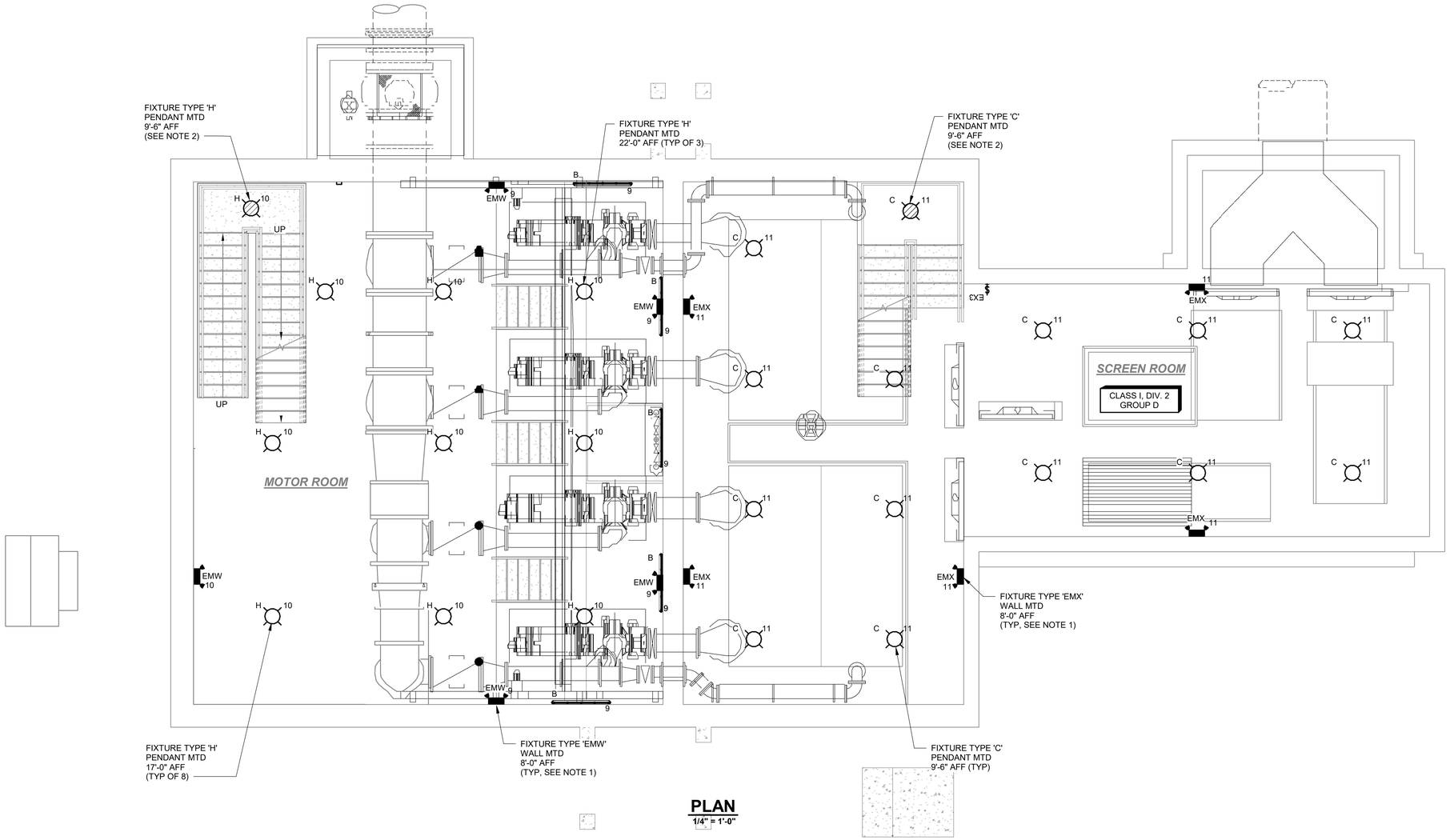


**PLAN**
1/4" = 1'-0"

DATE:
SPENCER J. PERRY JR
PE NO. 62587

| REV. NO. | DATE | DRWN | CHKD | REMARKS |
|---|---|---|---|---|

DESIGNED BY: O. CRUZ
DRAWN BY: R. RUCK
SHEET CHK'D BY:
CROSS CHK'D BY:
APPROVED BY: S. PERRY
DATE: FEBRUARY 2020

CDM Smith
4651 Salisbury Road, Suite 420
Jacksonville, FL 32256
Tel: (904) 731-7109
FL COA No. EB-0000020

JEA

WILSON BLVD. (180-45) AND 118th ST. (180-47)
MASTER PUMP STATION IMPROVEMENTS

118TH ST. MASTER PUMP STATION
LOWER LEVEL AT EL. -3.50' & 11.69'
LIGHTING PLAN

PROJECT NO. 6103-234169
FILE NAME: EWZ001PS.RVT

SHEET NO.
E-25

60% SUBMITTAL - NOT FOR CONSTRUCTION

© 2019 CDM SMITH ALL RIGHTS RESERVED.
REUSE OF DOCUMENTS: THESE DOCUMENTS AND DESIGNS PROVIDED BY PROFESSIONAL SERVICE, INCORPORATED HEREIN, ARE THE PROPERTY OF CDM SMITH AND ARE NOT TO BE USER, IN WHOLE OR PART, FOR ANY OTHER PROJECT WITHOUT THE WRITTEN AUTHORIZATION OF CDM SMITH.

**NOTE:**

1. EXIT SIGNS 'EX' AND EMERGENCY EGRESS LIGHT FIXTURE 'EM' SHALL BE WIRED TO THE NORMAL LIGHTING CIRCUIT OF THE ROOM IT SERVES AND TO THE LINE-SIDE OF THE LIGHT SWITCH.

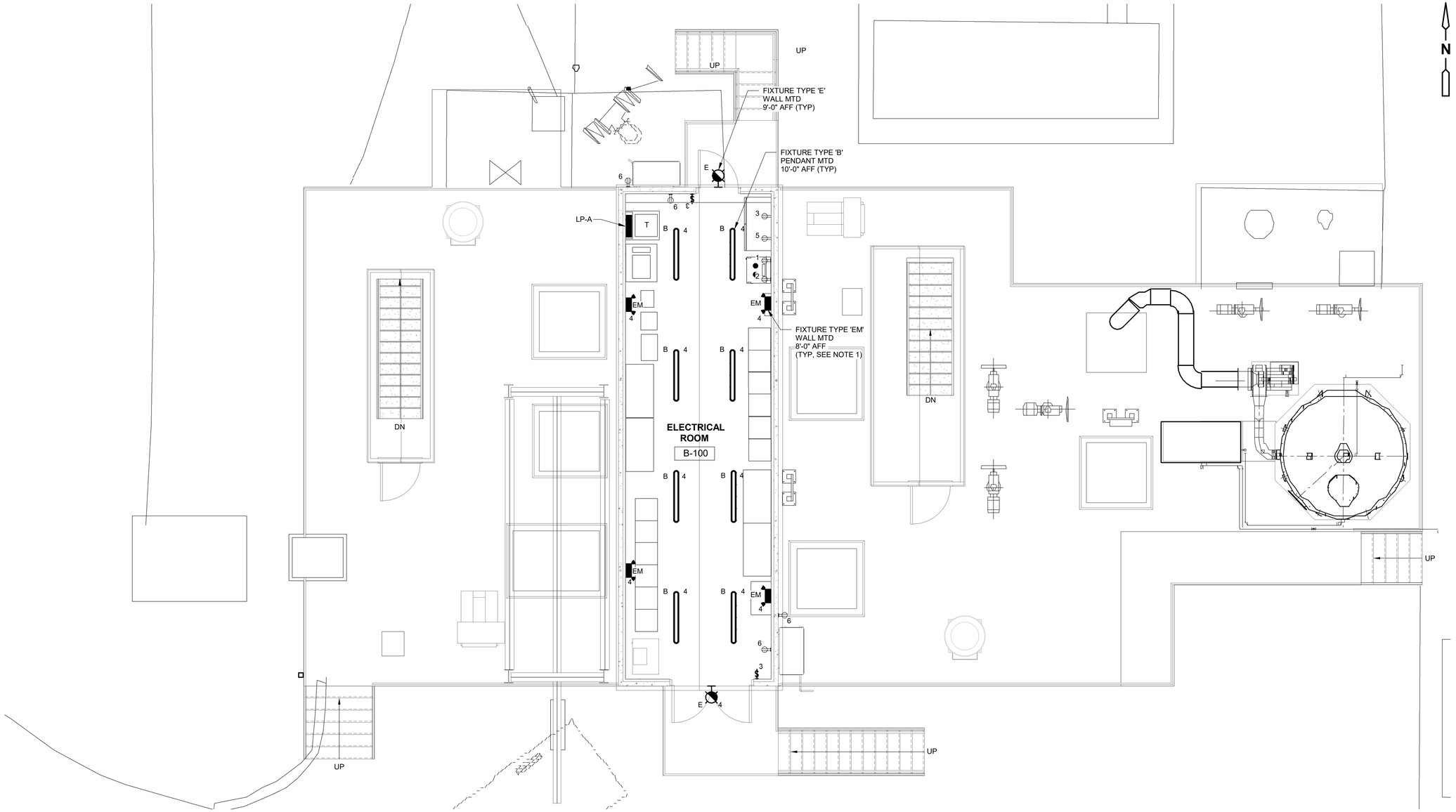


**PLAN**
1/4" = 1'-0"

DATE:
SPENCER J. PERRY JR
PE NO. 62587

| REV. NO. | DATE | DRWN | CHKD | REMARKS |
|---|---|---|---|---|

DESIGNED BY: O. CRUZ
DRAWN BY: R. RUCK
SHEET CHK'D BY:
CROSS CHK'D BY:
APPROVED BY: S. PERRY
DATE: FEBRUARY 2020

CDM Smith
4651 Salisbury Road, Suite 420
Jacksonville, FL 32256
Tel: (904) 731-7109
FL COA No. EB-0000020

JEA

WILSON BLVD. (180-45) AND 118th ST. (180-47)
MASTER PUMP STATION IMPROVEMENTS

118TH ST. MASTER PUMP STATION
UPPER LEVEL AT EL. 8.00
LIGHTING PLAN

PROJECT NO. 6103-234169
FILE NAME: EWZ001PS.RVT

SHEET NO.
E-26

60% SUBMITTAL - NOT FOR CONSTRUCTION

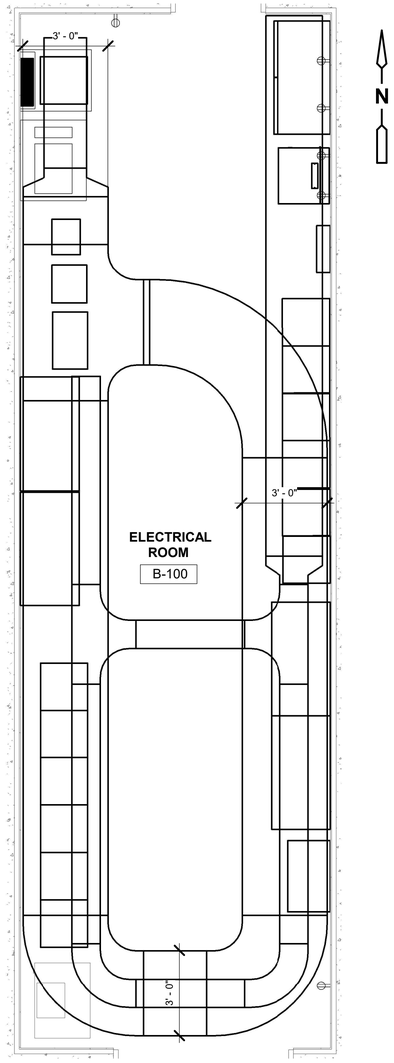


2 E-27 CABLE TRAY LAYOUT PLAN
3/8" = 1'-0"

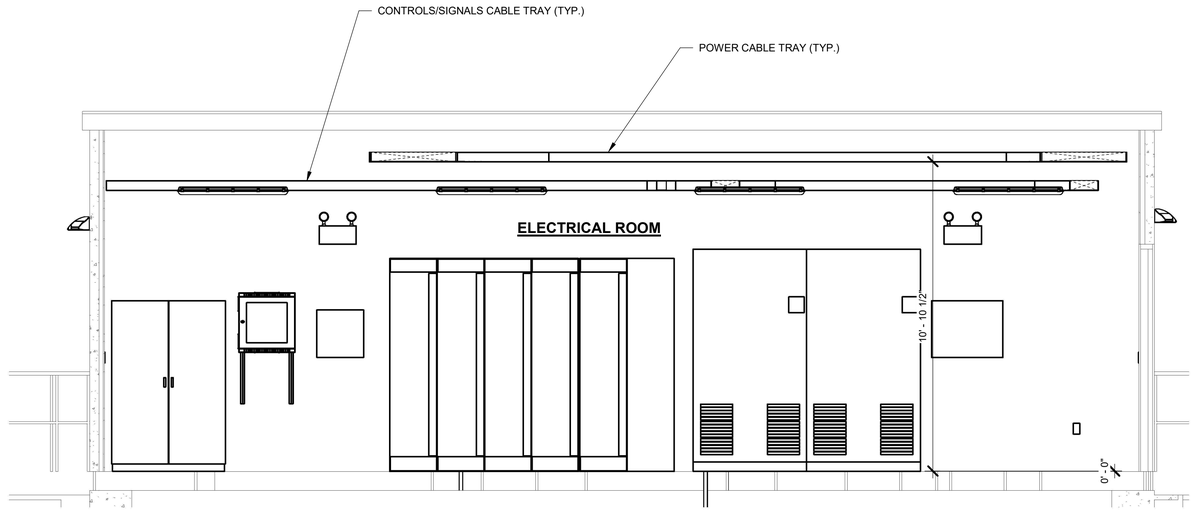


SECTION 1 E-27
3/8" = 1'-0"

DATE:
SPENCER J. PERRY JR
PE NO. 62587

| REV. NO. | DATE | DRWN | CHKD | REMARKS |
|---|---|---|---|---|
| | | | | |

DESIGNED BY: O. CRUZ
DRAWN BY: R. RUCK
SHEET CHK'D BY:
CROSS CHK'D BY:
APPROVED BY: S. PERRY
DATE: FEBRUARY 2020

CDM Smith
4651 Salisbury Road, Suite 420
Jacksonville, FL 32256
Tel: (904) 731-7109
FL COA No. EB-0000020

JEA

WILSON BLVD. (180-45) AND 118th ST. (180-47)
MASTER PUMP STATION IMPROVEMENTS

1118TH ST. MASTER PUMP STATION
ELECTRICAL ROOM
CABLE TRAY SECTION AND LAYOUT PLAN

PROJECT NO. 6103-234169
FILE NAME: EWZ001PS.RVT

SHEET NO.
E-27

60% SUBMITTAL - NOT FOR CONSTRUCTION

© 2019 CDM SMITH ALL RIGHTS RESERVED.
REUSE OF DOCUMENTS: THESE DOCUMENTS AND DESIGNS PROVIDED BY PROFESSIONAL SERVICE, INCORPORATED HEREIN, ARE THE PROPERTY OF CDM SMITH AND ARE NOT TO BE USER, IN WHOLE OR PART, FOR ANY OTHER PROJECT WITHOUT THE WRITTEN AUTHORIZATION OF CDM SMITH.

© 2019 CDM SMITH ALL RIGHTS RESERVED.
REUSE OF DOCUMENTS: THEESE DOCUMENTS AND DESIGNS PROVIDED BY PROFESSIONAL SERVICE, INCORPORATED HEREIN, ARE THE PROPERTY OF CDM SMITH AND ARE NOT TO BE USER, IN WHOLE OR PART, FOR ANY OTHER PROJECT WITHOUT THE WRITTEN AUTHORIZATION OF CDM SMITH.

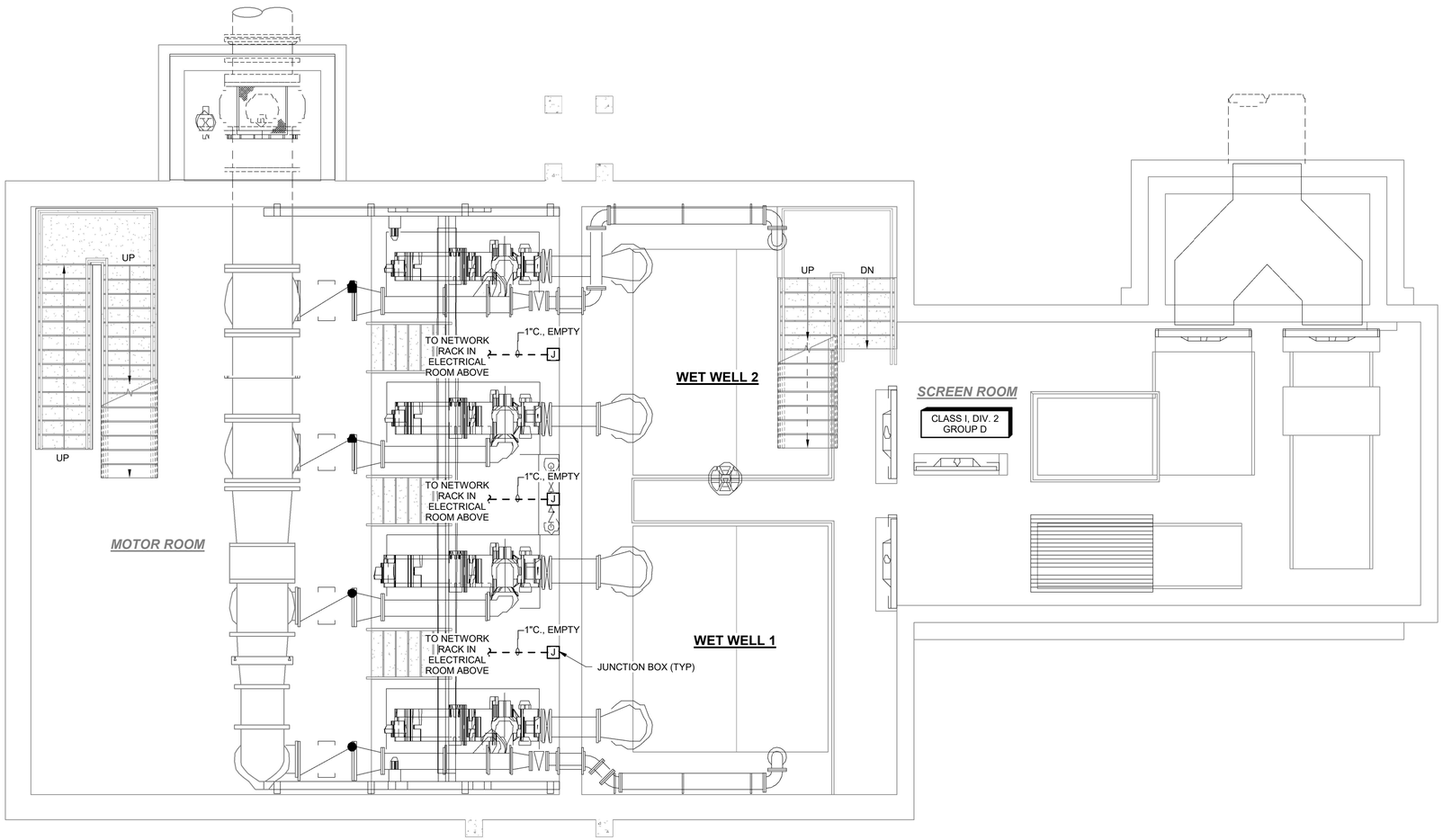


## PLAN
1/4" = 1'-0"

| REV. NO. | DATE | DRWN | CHKD | REMARKS |
|---|---|---|---|---|

DESIGNED BY: O. CRUZ
DRAWN BY: R. RUCK
SHEET CHK'D BY:
CROSS CHK'D BY:
APPROVED BY: S. PERRY
DATE: FEBRUARY 2020

CDM Smith
4651 Salisbury Road, Suite 420
Jacksonville, FL 32256
Tel: (904) 731-7109
FL COA No. EB-0000020

JEA

WILSON BLVD. (180-45) AND 118th ST. (180-47)
MASTER PUMP STATION IMPROVEMENTS

118TH ST. MASTER PUMP STATION
LOWER LEVEL
SECURITY SYSTEMS PLAN

PROJECT NO. 6103-234169
FILE NAME: EWZ001PS.RVT
SHEET NO.
E-28

60% SUBMITTAL - NOT FOR CONSTRUCTION

© 2019 CDM SMITH ALL RIGHTS RESERVED.
REUSE OF DOCUMENTS: THEESE DOCUMENTS AND DESIGNS PROVIDED BY PROFESSIONAL SERVICE, INCORPORATED HEREIN, ARE THE PROPERTY OF CDM SMITH AND ARE NOT TO BE USER, IN WHOLE OR PART, FOR ANY OTHER PROJECT WITHOUT THE WRITTEN AUTHORIZATION OF CDM SMITH.

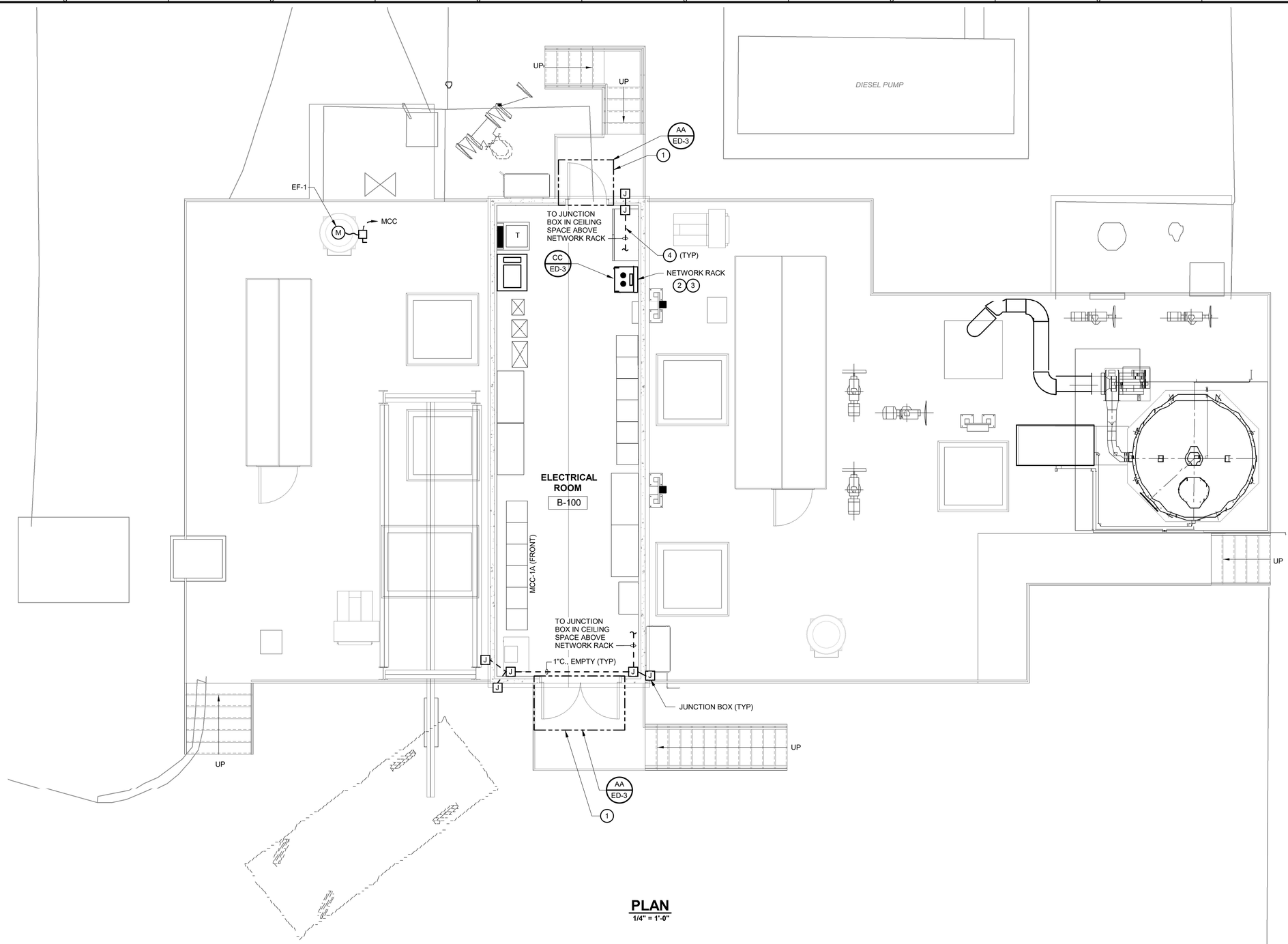


**PLAN**
1/4" = 1'-0"

## (#) KEYED NOTES:

1. PROVIDE ALL RACEWAY INFRASTRUCTURE FOR THE ACCESS CONTROL SYSTEM. COORDINATE WITH JEA PRIOR TO INSTALLATION.
2. COORDINATE LOCATION WITH JEA PRIOR TO INSTALLATION.
3. PROVIDE JUNCTION BOX ABOVE SUSPENDED CEILING TO ALL FIELD NETWORK CONDUITS. THE JUNCTION BOX SHALL BE SIZED IN ACCORDANCE WITH THE NEC.
4. PROVIDE ALL RACEWAY INFRASTRUCTURE FOR THE CCTV SYSTEM. COORDINATE LOCATION WITH JEA PRIOR TO INSTALLATION.

| REV. NO. | DATE | DRWN | CHKD | REMARKS |
|---|---|---|---|---|

DESIGNED BY: O. CRUZ
DRAWN BY: R. RUCK
SHEET CHK'D BY:
CROSS CHK'D BY:
APPROVED BY: S. PERRY
DATE: FEBRUARY 2020

CDM Smith
4651 Salisbury Road, Suite 420
Jacksonville, FL 32256
Tel: (904) 731-7109
FL COA No. EB-0000020

JEA

WILSON BLVD. (180-45) AND 118th ST. (180-47)
MASTER PUMP STATION IMPROVEMENTS

118TH ST. MASTER PUMP STATION
UPPER LEVEL
SECURITY SYSTEMS PLAN

PROJECT NO. 6103-234169
FILE NAME: EWZ001PS.RVT

SHEET NO.
E-29

60% SUBMITTAL - NOT FOR CONSTRUCTION

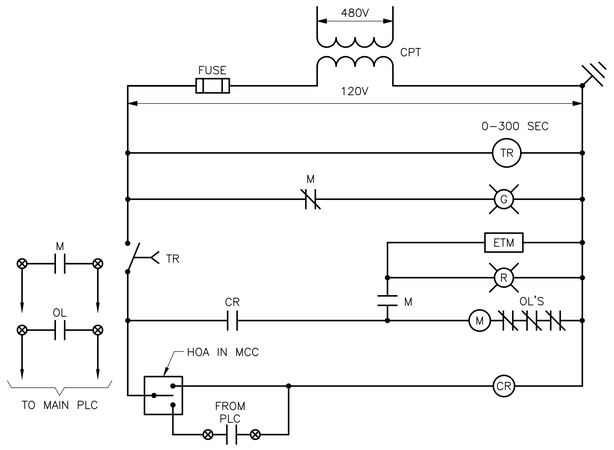


SIZE 1 SPARES

ELEMENTARY CONTROL DIAGRAM

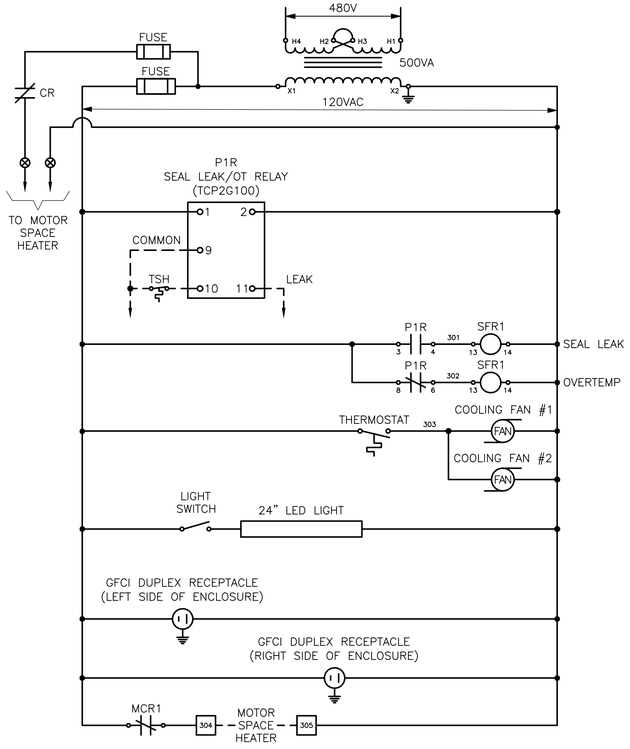


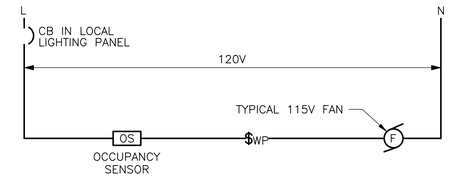


115V EXHAUST FAN

ELEMENTARY CONTROL DIAGRAM

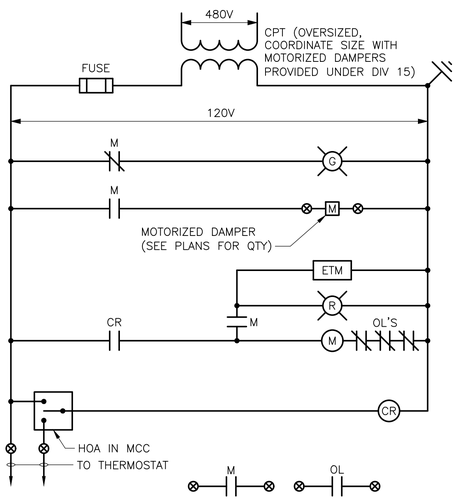


EXHAUST FANS

ELEMENTARY CONTROL DIAGRAM

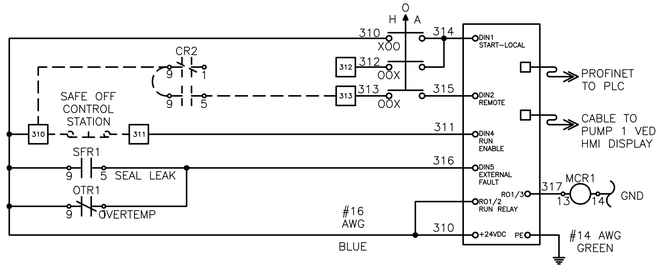


WASTEWATER PUMP NO. 1, 2 AND 3

ELEMENTARY CONTROL DIAGRAM

| REV. NO. | DATE | DRWN | CHKD | REMARKS |
|---|---|---|---|---|
| | | | | |

DESIGNED BY: O. CRUZ
DRAWN BY: R. CARTER
SHEET CHK'D BY: X
CROSS CHK'D BY: X
APPROVED BY: S. PERRY
DATE: FEBRUARY 2020

CDM Smith
4651 Salisbury Road, Suite 420
Jacksonville, FL 32256
Tel: (904) 731-7109
FL COA No. EB-0000020

JEA

WILSON BLVD. (180-45) AND 118th ST. (180-47)
MASTER PUMP STATION IMPROVEMENTS

ELEMENTARY CONTROL DIAGRAMS

DATE:
SPENCER J. PERRY JR
PE NO. 62587

PROJECT NO. 6103-234169
FILE NAME: E030NFCD.DWG

SHEET NO.
E-30

60% SUBMITTAL - NOT FOR CONSTRUCTION

XREFs: [CDMS_2234]
Images: []
Last saved by: RUCKRM Time: 2/14/2020 4:34:35 PM
pw:\\cdmsmith-azo2-pw.bentley.com:PW_XM1\6103\234169 JEA PDB\04 Design Services NM_608\09 Electrical\10 CADD\E030NFCD.dwg
©2020 CDM SMITH ALL RIGHTS RESERVED.
REUSE OF DOCUMENTS: THESE DOCUMENTS AND DESIGNS PROVIDED BY PROFESSIONAL SERVICE, INCORPORATED HEREIN, ARE THE PROPERTY OF CDM SMITH AND ARE NOT TO BE USED, IN WHOLE OR PART, FOR ANY OTHER PROJECT WITHOUT THE WRITTEN AUTHORIZATION OF CDM SMITH.

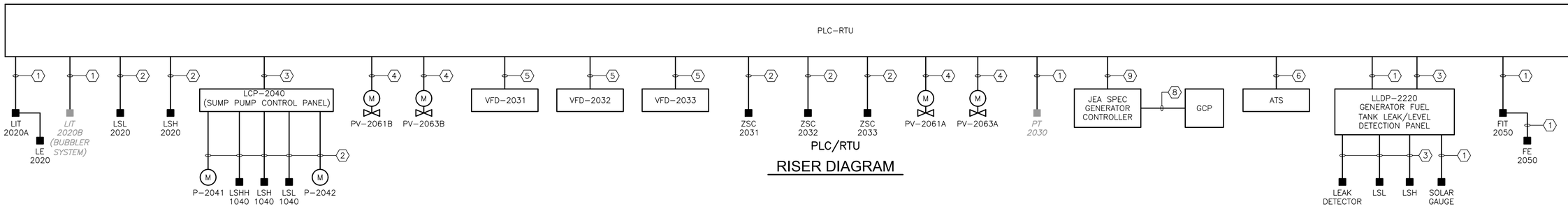


RISER DIAGRAM

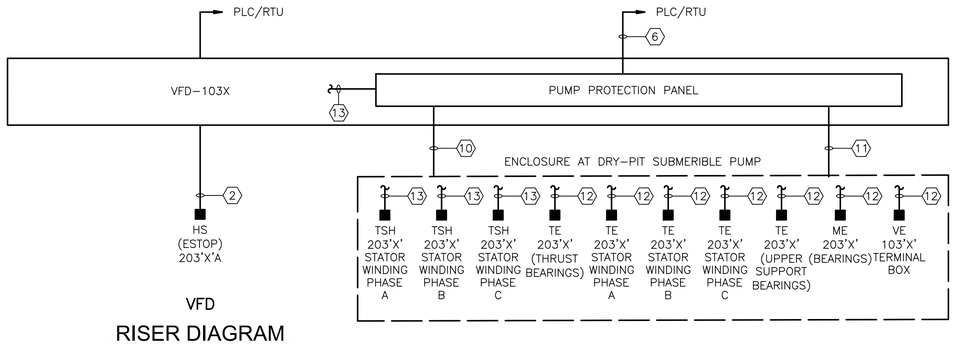


RISER DIAGRAM

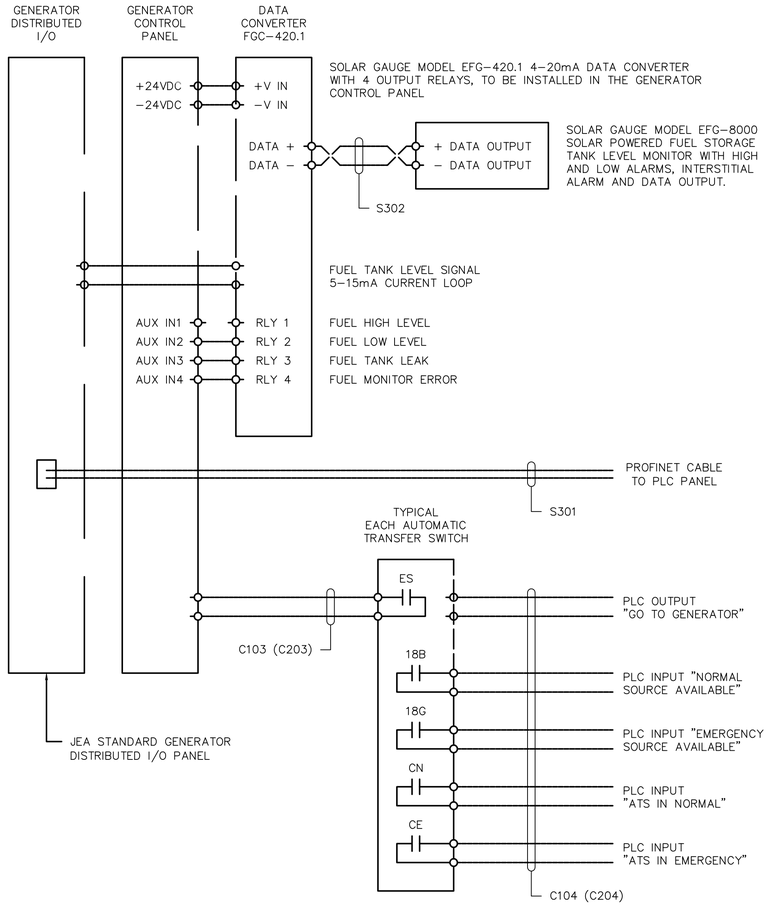


## CONDUIT AND WIRE LEGEND
(NUMBERS REFERENCE THIS SHEET ONLY)

| NO. | DESCRIPTION |
|---|---|
| 1 | 3/4"C., 2#16TS |
| 2 | 3/4"C., 2#14 |
| 3 | 1"C., 6#14 |
| 4 | 1"C., 8#14 |
| 5 | 1"C., PROFINET CABLE |
| 6 | 3/4"C., 4#14 |
| 7 | 1"C., SIGNAL WIRE PER JEA SPEC |
| 8 | 1"C., 16#14 |
| 9 | 1"C., PROFIBUS CABLE |
| 10 | 1"C., 10#14 |
| 11 | 1"C., 9 PAIR #18TS |
| 12 | 2#16TS |
| 13 | 2#14 |

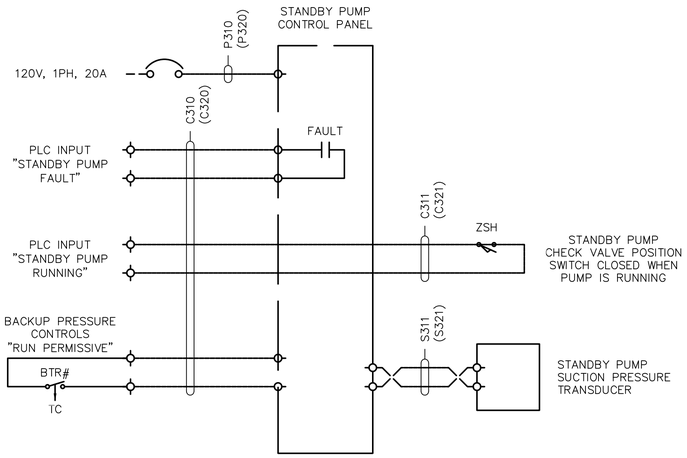


TYPICAL DIESEL STANDBY PUMP CONTROL WIRING DIAGRAM

STANDBY GENERATOR AND FUEL STORAGE TANK MONITORING CONTROL WIRING DIAGRAM

NOTES:

1. THE STANDBY GENERATOR FUEL STORAGE TANK SHALL BE EQUIPPED WITH A COMPLETE FUEL TANK LEVEL AND INTERSTITIAL LEAK MONITORING SYSTEM (SOLAR GAUGE MODEL EFG–8000–I).
2. THE STANDBY GENERATOR CONTROL PANEL SHALL BE EQUIPPED WITH A FUEL STORAGE TANK LEVEL MONITOR DATA CONVERTER (SOLAR GAUGE MODEL FGC–420.1) MOUNTED WITHIN THE GENERATOR CONTROL PANEL ENCLOSURE.

DATE:
SPENCER J. PERRY JR
PE NO. 62587

| REV. NO. | DATE | DRWN | CHKD | REMARKS |
|---|---|---|---|---|

DESIGNED BY: O. CRUZ
DRAWN BY: R. RUCK
SHEET CHK'D BY: X
CROSS CHK'D BY: X
APPROVED BY: S. PERRY
DATE: FEBRUARY 2020

CDM Smith
4651 Salisbury Road, Suite 420
Jacksonville, FL 32256
Tel: (904) 731-7109
FL COA No. EB-0000020

JEA

WILSON BLVD. (180-45) AND 118th ST. (180-47)
MASTER PUMP STATION IMPROVEMENTS

WILSON BLVD. PUMP STATION
RISER DIAGRAMS

PROJECT NO. 6103–234169
FILE NAME: E031NFRD.DWG

SHEET NO.
E-31

60% SUBMITTAL - NOT FOR CONSTRUCTION

XREFs: [CDMS_2234] Images: []
Last saved by: RUCKRM Time: 2/14/2020 4:35:47 PM
pw:\\cdmsmith-az02-pw.bentley.com:PW_XM1\6103\234169 JEA PDB\04 Design Services NM_60%\09 Electrical\10 CADD\E031NFRD.dwg
©2020 CDM SMITH ALL RIGHTS RESERVED
REUSE OF DOCUMENTS: THESE DOCUMENTS AND DESIGNS PROVIDED BY PROFESSIONAL SERVICE, INCORPORATED HEREIN, ARE THE PROPERTY OF CDM SMITH AND ARE NOT TO BE USED, IN WHOLE OR PART, FOR ANY OTHER PROJECT WITHOUT THE WRITTEN AUTHORIZATION OF CDM SMITH.

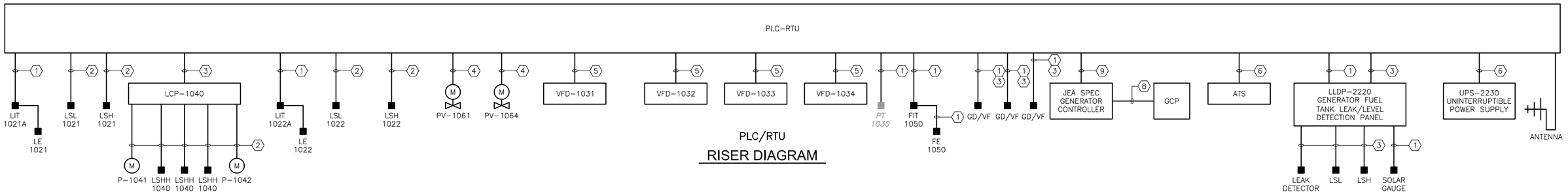


PLC/RTU

## RISER DIAGRAM

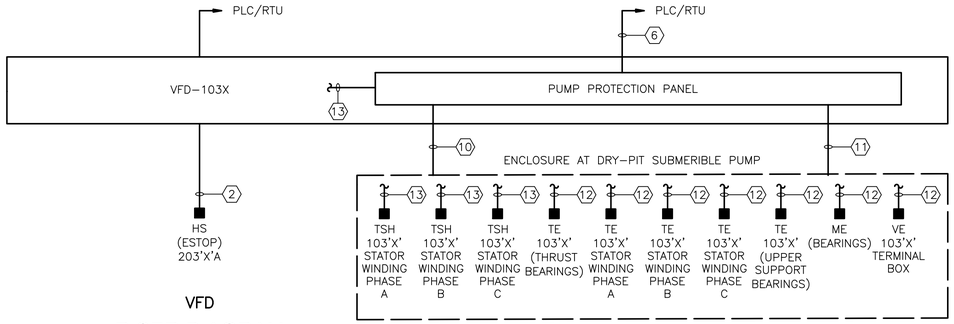


VFD

## RISER DIAGRAM

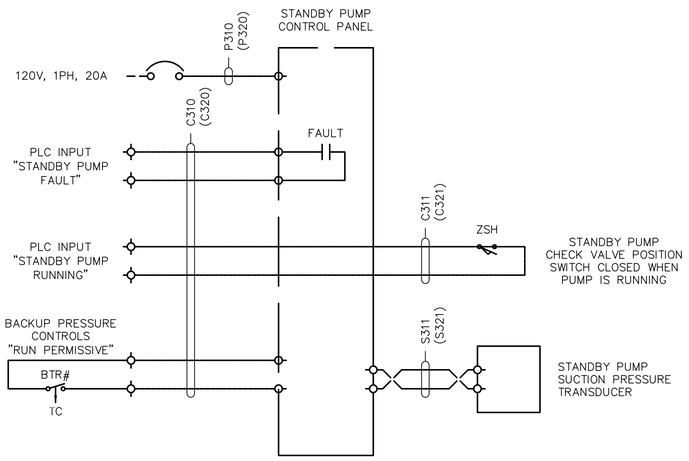


TYPICAL DIESEL STANDBY PUMP CONTROL WIRING DIAGRAM

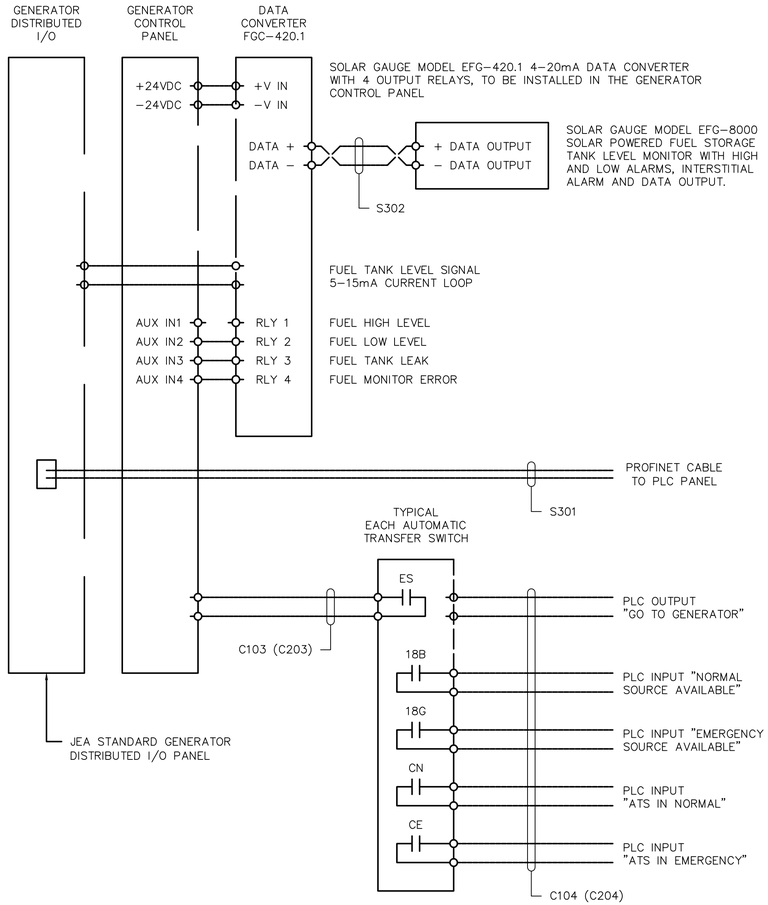


NOTES:

1. THE STANDBY GENERATOR FUEL STORAGE TANK SHALL BE EQUIPPED WITH A COMPLETE FUEL TANK LEVEL AND INTERSTITIAL LEAK MONITORING SYSTEM (SOLAR GAUGE MODEL EFG–8000–I).
2. THE STANDBY GENERATOR CONTROL PANEL SHALL BE EQUIPPED WITH A FUEL STORAGE TANK LEVEL MONITOR DATA CONVERTER (SOLAR GAUGE MODEL FGC–420.1) MOUNTED WITHIN THE GENERATOR CONTROL PANEL ENCLOSURE.

STANDBY GENERATOR AND FUEL STORAGE TANK MONITORING CONTROL WIRING DIAGRAM

## CONDUIT AND WIRE LEGEND
(NUMBERS REFERENCE THIS SHEET ONLY)

| NO. | DESCRIPTION |
|---|---|
| 1 | 3/4"C., 2#16TS |
| 2 | 3/4"C., 2#14 |
| 3 | 1"C., 6#14 |
| 4 | 1"C., 8#14 |
| 5 | 1"C., PROFINET CABLE |
| 6 | 3/4"C., 4#14 |
| 7 | 1"C., SIGNAL WIRE PER JEA SPEC |
| 8 | 1"C., 16#14 |
| 9 | 1"C., PROFIBUS CABLE |
| 10 | 1"C., 10#14 |
| 11 | 1"C., 9 PAIR #18TS |
| 12 | 2#16TS |
| 13 | 2#14 |

| REV. NO. | DATE | DRWN | CHKD | REMARKS |
|---|---|---|---|---|

DESIGNED BY: O. CRUZ
DRAWN BY: R. RUCK
SHEET CHK'D BY: X
CROSS CHK'D BY: X
APPROVED BY: S. PERRY
DATE: FEBRUARY 2020

CDM Smith
4651 Salisbury Road, Suite 420
Jacksonville, FL 32256
Tel: (904) 731-7109
FL COA No. EB-0000020

JEA

WILSON BLVD. (180-45) AND 118th ST. (180-47)
MASTER PUMP STATION IMPROVEMENTS

118TH ST. MASTER PUMP STATION
RISER DIAGRAMS

DATE:
SPENCER J. PERRY JR
PE NO. 62587

PROJECT NO. 6103–234169
FILE NAME: E032NFRD.DWG

SHEET NO.
E-32

60% SUBMITTAL - NOT FOR CONSTRUCTION

XREFs: [CDMS_2234] Images: []
Last saved by: CRUZOD Time: 2/18/2020 5:34:26 PM
p:\\cdmsmith-a202-pw.bentley.com:PW_XW1\6103\234169 JEA PDB\04 Design Services NM_608\09 Electrical\10 CADD\E032NFRD.dwg
©2020 CDM SMITH ALL RIGHTS RESERVED.
REUSE OF DOCUMENTS: THESE DOCUMENTS AND DESIGNS PROVIDED BY PROFESSIONAL SERVICE, INCORPORATED HEREIN, ARE THE PROPERTY OF CDM SMITH AND ARE NOT TO BE USED, IN WHOLE OR PART, FOR ANY OTHER PROJECT WITHOUT THE WRITTEN AUTHORIZATION OF CDM SMITH.

## Branch Panel: LP-A

**Location:** ELECTRICAL ROOM 101
**Supply From:**
**Mounting:** SURFACE
**Enclosure:** Type 1

**Volts:** 120/208 Wye
**Phases:** 3
**Wires:** 4

**A.I.C. Rating:**
**Mains Type:**
**Mains Rating:** 100 A
**MCB Rating:** 100 A

| CKT | Circuit Description | Notes | Trip | Poles | A | B | C | A | B | C | Poles | Trip | Notes | Circuit Description | CKT |
|---|---|---|---|---|---|---|---|---|---|---|---|---|---|---|---|
| 1 | PLC CKT A | 7 | 20 A | 1 | 0.18... | | | 0.18... | | | 1 | 20 A | 7 | NETWORK RACK CKT B | 2 |
| 3 | HVAC | 6 | 30 A | 2 | | 2.12... | | | 0.28... | | 1 | 20 A | 7 | Lighting (PUMP ROOM) | 4 |
| 5 | -- | | -- | -- | | | 2.12... | | | 0.28... | 1 | 20 A | 7 | Lighting (PUMP ROOM) | 6 |
| 7 | Power | 7 | 20 A | 1 | 0.26... | | | 0.26... | | | 1 | 20 A | 7 | Lighting | 8 |
| 9 | Lighting Wet Well | 7 | 20 A | 1 | | 0.26... | | | 0.21... | | 1 | 20 A | 7 | Lighting Wet Well | 10 |
| 11 | Receptacle (AC UNIT) | | 20 A | 1 | | | 0.18... | | | | | | | | 12 |
| 13 | EF-5 | 7 | 20 A | 1 | 0.62... | | | 0.56... | | | 2 | 30 A | 6 | Generator Jacker Heater | 14 |
| 15 | ACCU-2 | 6 | 20 A | 2 | | 0.14... | | | 0.56... | | -- | -- | | -- | 16 |
| 17 | -- | | -- | -- | | | 0.14... | | | 0.00... | 1 | 20 A | | Spare | 18 |
| 19 | Spare | | 20 A | 1 | 0.00... | | | 0.00... | | | 1 | 20 A | | Spare | 20 |
| 21 | Spare | | 20 A | 1 | | 0.00... | | | 0.00... | | 1 | 20 A | | Spare | 22 |
| 23 | Spare | | 20 A | 1 | | | 0.00... | | | 0.00... | 1 | 20 A | | Spare | 24 |
| 25 | Spare | | 20 A | 1 | 0.00... | | | 0.00... | | | 1 | 20 A | | Spare | 26 |
| 27 | Spare | | 20 A | 1 | | 0.00... | | | 0.00... | | 1 | 20 A | | Spare | 28 |
| 29 | Spare | | 20 A | 1 | | | 0.00... | | | 0.00... | 1 | 20 A | | Spare | 30 |
| 31 | Spare | | 20 A | 1 | 0.00... | | | 0.00... | | | 1 | 20 A | | Spare | 32 |
| 33 | Spare | | 20 A | 1 | | 0.00... | | | 0.00... | | 1 | 20 A | | Spare | 34 |
| 35 | Spare | | 20 A | 1 | | | 0.00... | | | 0.00... | 1 | 20 A | | Spare | 36 |
| 37 | Spare | | 20 A | 1 | 0.00... | | | 0.00... | | | 1 | 20 A | | Spare | 38 |
| 39 | Spare | | 20 A | 1 | | 0.00... | | | 0.00... | | 1 | 20 A | | Spare | 40 |
| 41 | Spare | | 20 A | 1 | | | 0.00... | | | 0.00... | 1 | 20 A | | Spare | 42 |
| | | | | **Total Load:** | 2020 VA | | 3551 VA | | 2690 VA | | | | | | |
| | | | | **Total Amps:** | 17 A | | 30 A | | 23 A | | | | | | |

| Panel Totals | |
|---|---|
| **Total Conn. Load:** | 7986 VA |
| **Total Est. Demand:** | 8439 VA |
| **Total Conn.:** | 22 A |
| **Total Est. Demand:** | 23 A |

**Notes:**
1. PROVIDE LOCKING HARDWARE
2. 5 ma GROUND FAULT INTERRUPTER (GFI) CIRCUIT BREAKER
3. 30 ma GFI CIRCUIT BREAKER FOR EQUIPMENT PROTECTION ONLY (HEAT TRACE)
4. PROVIDE LOCKING HARDWARE & PAINT BREAKER HANDLE RED (FACP)
5. BRANCH CIRCUIT WIRING: 3/4"C., 3#12 & 1#12G
6. BRANCH CIRCUIT WIRING: 3/4"C., 3#10 & 1#12G
7. BRANCH CIRCUIT WIRING: 3/4"C., 2#12 & 1#12G
8.

## Branch Panel: LP-B

**Location:** ELECTRICAL ROOM 101
**Supply From:**
**Mounting:** Recessed
**Enclosure:** Type 1

**Volts:** 120/208 Wye
**Phases:** 3
**Wires:** 4

**A.I.C. Rating:**
**Mains Type:**
**Mains Rating:** 100 A
**MCB Rating:** 100 A

| CKT | Circuit Description | Notes | Trip | Poles | A | B | C | A | B | C | Poles | Trip | Notes | Circuit Description | CKT |
|---|---|---|---|---|---|---|---|---|---|---|---|---|---|---|---|
| 1 | PLC CKT B | 7 | 20 A | 1 | 0.18... | | | 0.18... | | | 1 | 20 A | 7 | NETWORK RACK CKT A | 2 |
| 3 | HVAC | 6 | 30 A | 2 | | 2.12... | | | 0.14... | | 2 | 20 A | 6 | ACCU-1 | 4 |
| 5 | -- | | -- | -- | | | 2.12... | | | 0.14... | -- | -- | | -- | 6 |
| 7 | BATHROOM (LTG/RECPT) | 7 | 20 A | 1 | 0.22... | | | 0.23... | | | 1 | 20 A | 7 | Lighting Generator Room | 8 |
| 9 | Spare | | 20 A | 1 | | 0.00... | | | 0.00... | | 1 | 20 A | | Spare | 10 |
| 11 | Spare | | 20 A | 1 | | | 0.00... | | | 0.00... | 1 | 20 A | | Spare | 12 |
| 13 | LIGHTING (ELECTRICAL ROOM 101) | 7 | 20 A | 1 | 0.38... | | | 0.34... | | | 1 | 20 A | 7 | Lighting (Room 103 AND OUTSIDE) | 14 |
| 15 | Spare | | 20 A | 1 | | 0.00... | | | 0.00... | | 1 | 20 A | | Spare | 16 |
| 17 | Spare | | 20 A | 1 | | | 0.00... | | | 0.00... | 1 | 20 A | | Spare | 18 |
| 19 | Lighting (SCREEN ROOM 106) | 7 | 20 A | 1 | 0.37... | | | 0.00... | | | 1 | 20 A | | Spare | 20 |
| 21 | Spare | | 20 A | 1 | | 0.00... | | | 0.00... | | 1 | 20 A | | Spare | 22 |
| 23 | Spare | | 20 A | 1 | | | 0.00... | | | 0.00... | 1 | 20 A | | Spare | 24 |
| 25 | Spare | | 20 A | 1 | 0.00... | | | 0.00... | | | 1 | 20 A | | Spare | 26 |
| 27 | Spare | | 20 A | 1 | | 0.00... | | | 0.00... | | 1 | 20 A | | Spare | 28 |
| 29 | Spare | | 20 A | 1 | | | 0.00... | | | 0.00... | 1 | 20 A | | Spare | 30 |
| 31 | Spare | | 20 A | 1 | 0.00... | | | 0.00... | | | 1 | 20 A | | Spare | 32 |
| 33 | Spare | | 20 A | 1 | | 0.00... | | | 0.00... | | 1 | 20 A | | Spare | 34 |
| 35 | Spare | | 20 A | 1 | | | 0.00... | | | 0.00... | 1 | 20 A | | Spare | 36 |
| 37 | Spare | | 20 A | 1 | 0.00... | | | 0.00... | | | 1 | 20 A | | Spare | 38 |
| 39 | Spare | | 20 A | 1 | | 0.00... | | | 0.00... | | 1 | 20 A | | Spare | 40 |
| 41 | Spare | | 20 A | 1 | | | 0.00... | | | 0.00... | 1 | 20 A | | Spare | 42 |
| | | | | **Total Load:** | 1878 VA | | 2250 VA | | 2250 VA | | | | | | |
| | | | | **Total Amps:** | 16 A | | 19 A | | 19 A | | | | | | |

| Panel Totals | |
|---|---|
| **Total Conn. Load:** | 6036 VA |
| **Total Est. Demand:** | 6164 VA |
| **Total Conn.:** | 17 A |
| **Total Est. Demand:** | 17 A |

**Notes:**
1. PROVIDE LOCKING HARDWARE
2. 5 ma GROUND FAULT INTERRUPTER (GFI) CIRCUIT BREAKER
3. 30 ma GFI CIRCUIT BREAKER FOR EQUIPMENT PROTECTION ONLY (HEAT TRACE)
4. PROVIDE LOCKING HARDWARE & PAINT BREAKER HANDLE RED (FACP)
5. BRANCH CIRCUIT WIRING: 3/4"C., 3#12 & 1#12G
6. BRANCH CIRCUIT WIRING: 3/4"C., 3#10 & 1#12G
7. BRANCH CIRCUIT WIRING: 3/4"C., 2#12 & 1#12G
8.

© 2019 CDM SMITH ALL RIGHTS RESERVED.
REUSE OF DOCUMENTS: THEESE DOCUMENTS AND DESIGNS PROVIDED BY PROFESSIONAL SERVICE, INCORPORATED HEREIN, ARE THE PROPERTY OF CDM SMITH AND ARE NOT TO BE USER, IN WHOLE OR PART, FOR ANY OTHER PROJECT WITHOUT THE WRITTEN AUTHORIZATION OF CDM SMITH.

| REV. NO. | DATE | DRWN | CHKD | REMARKS |
|---|---|---|---|---|
| | | | | |

DESIGNED BY: O. CRUZ
DRAWN BY: R. RUCK
SHEET CHK'D BY:
CROSS CHK'D BY:
APPROVED BY: S. PERRY
DATE: FEBRUARY 2020

CDM Smith
4651 Salisbury Road, Suite 420
Jacksonville, FL 32256
Tel: (904) 731-7109
FL COA No. EB-0000020

JEA

WILSON BLVD. (180-45) AND 118th ST. (180-47)
MASTER PUMP STATION IMPROVEMENTS

WILSON BLVD. PUMP STATION
PANELBOARD SCHEDULES

DATE:
SPENCER J. PERRY JR
PE NO. 62587

PROJECT NO. 6103-234169
FILE NAME: EWZ002PS.RVT

SHEET NO.
E-33

60% SUBMITTAL - NOT FOR CONSTRUCTION

# Branch Panel: LP-A

**Location:** ELECTRICAL ROOM B-100
**Supply From:**
**Mounting:** Surface
**Enclosure:** Type 1

**Volts:** 120/208 Wye
**Phases:** 3
**Wires:** 4

**A.I.C. Rating:**
**Mains Type:**
**Mains Rating:** 100 A
**MCB Rating:** 100 A

| CKT | Circuit Description | Notes | Trip | Poles | A | B | C | A | B | C | Poles | Trip | Notes | Circuit Description | CKT |
|---|---|---|---|---|---|---|---|---|---|---|---|---|---|---|---|
| 1 | Network Rack CKT A | 7 | 20 A | 1 | 0.56... | | | 0.56... | | | 1 | 20 A | 7 | Network Rack CKT B | 2 |
| 3 | PLC CKT A | 7 | 20 A | 1 | | 0.56... | | | 0.13... | | 1 | 20 A | 7 | LIGHTING - ELECTRICAL ROOM B-100 | 4 |
| 5 | PLC CKT B | 7 | 20 A | 1 | | | 0.56... | | | 0.72... | 1 | 20 A | 7 | Receptacle (ELECTRIC ROOM) | 6 |
| 7 | SITE LIGHTING | 7 | 20 A | 1 | 0.36... | | | 0.10... | | | 1 | 20 A | 7 | FIT-1050 | 8 |
| 9 | Lighting (PUMP ROOM/LOWER LEVEL) | 7 | 20 A | 1 | | 0.07... | | | 0.93... | | 1 | 20 A | 7 | LIGHTING (MOTOR ROOM) | 10 |
| 11 | Lighting (SCREENS ROOM) | 7 | 20 A | 1 | | | 1.36... | | | 0.00... | 1 | 20 A | | Spare | 12 |
| 13 | Spare | | 20 A | 1 | 0.00... | | | 0.00... | | | 1 | 20 A | | Spare | 14 |
| 15 | Spare | | 20 A | 1 | | 0.00... | | | 0.00... | | 1 | 20 A | | Spare | 16 |
| 17 | Spare | | 20 A | 1 | | | 0.00... | | | 0.00... | 1 | 20 A | | Spare | 18 |
| 19 | Spare | | 20 A | 1 | 0.00... | | | 0.00... | | | 1 | 20 A | | Spare | 20 |
| 21 | Spare | | 20 A | 1 | | 0.00... | | | 0.00... | | 1 | 20 A | | Spare | 22 |
| 23 | Spare | | 20 A | 1 | | | 0.00... | | | 0.00... | 1 | 20 A | | Spare | 24 |
| 25 | Spare | | 20 A | 1 | 0.00... | | | 0.00... | | | 1 | 20 A | | Spare | 26 |
| 27 | Spare | | 20 A | 1 | | 0.00... | | | 0.00... | | 1 | 20 A | | Spare | 28 |
| 29 | Spare | | 20 A | 1 | | | 0.00... | | | 0.00... | 1 | 20 A | | Spare | 30 |
| 31 | Spare | | 20 A | 1 | 0.00... | | | 0.00... | | | 1 | 20 A | | Spare | 32 |
| 33 | Spare | | 20 A | 1 | | 0.00... | | | 0.00... | | 1 | 20 A | | Spare | 34 |
| 35 | Spare | | 20 A | 1 | | | 0.00... | | | 0.00... | 1 | 20 A | | Spare | 36 |
| 37 | Spare | | 20 A | 1 | 0.00... | | | 0.00... | | | 1 | 20 A | | Spare | 38 |
| 39 | Spare | | 20 A | 1 | | 0.00... | | | 0.00... | | 1 | 20 A | | Spare | 40 |
| 41 | Spare | | 20 A | 1 | | | 0.00... | | | 0.00... | 1 | 20 A | | Spare | 42 |
| | | | | **Total Load:** | 1538 VA | | 1644 VA | | 2567 VA | | | | | | |
| | | | | **Total Amps:** | 13 A | | 14 A | | 22 A | | | | | | |

| Panel Totals | |
|---|---|
| **Total Conn. Load:** | 5735 VA |
| **Total Est. Demand:** | 6341 VA |
| **Total Conn.:** | 16 A |
| **Total Est. Demand:** | 18 A |

**Notes:**
1. PROVIDE LOCKING HARDWARE
2. 5 ma GROUND FAULT INTERRUPTER (GFI) CIRCUIT BREAKER
3. 30 ma GFI CIRCUIT BREAKER FOR EQUIPMENT PROTECTION ONLY (HEAT TRACE)
4. PROVIDE LOCKING HARDWARE & PAINT BREAKER HANDLE RED (FACP)
5. BRANCH CIRCUIT WIRING: 3/4"C., 3#12 & 1#12G
6. BRANCH CIRCUIT WIRING: 3/4"C., 3#10 & 1#12G
7. BRANCH CIRCUIT WIRING: 3/4"C., 2#12 & 1#12G
8.

© 2019 CDM SMITH ALL RIGHTS RESERVED.
REUSE OF DOCUMENTS: THEESE DOCUMENTS AND DESIGNS PROVIDED BY PROFESSIONAL SERVICE, INCORPORATED HEREIN, ARE THE PROPERTY OF CDM SMITH AND ARE NOT TO BE USER, IN WHOLE OR PART, FOR ANY OTHER PROJECT WITHOUT THE WRITTEN AUTHORIZATION OF CDM SMITH.

| REV. NO. | DATE | DRWN | CHKD | REMARKS |
|---|---|---|---|---|
| | | | | |

DESIGNED BY: O. CRUZ
DRAWN BY: R. RUCK
SHEET CHK'D BY:
CROSS CHK'D BY:
APPROVED BY: S. PERRY
DATE: FEBRUARY 2020

CDM Smith
4651 Salisbury Road, Suite 420
Jacksonville, FL 32256
Tel: (904) 731-7109
FL COA No. EB-0000020

JEA

WILSON BLVD. (180-45) AND 118th ST. (180-47)
MASTER PUMP STATION IMPROVEMENTS

118TH ST MASTER PUMP STATION
PANELBOARD SCHEDULES

DATE:
SPENCER J. PERRY JR
PE NO. 62587

PROJECT NO. 6103-234169
FILE NAME: EWZ001PS

SHEET NO.
E-34

60% SUBMITTAL - NOT FOR CONSTRUCTION

# LIGHTING FIXTURE SCHEDULE

| TYPE | WATT | DESCRIPTION | MFR (OR APPROVED EQUAL) |
|---|---|---|---|
| A | 80 | LED AREA LIGHT; TRADITIONAL ARM MOUNTED; ROUND POLE ADAPTER; 9206 NOMINAL LUMENS; 4,000K CCT; 70 CRI; DIE CAST ALUMINUM HOUSING; TYPE III OPTICAL DISTRIBUTION; STANDARD 700mA LED DRIVER; OPTICS FIELD REPLACEABLE; ONE–PIECE SILICONE GASKET; SURGE PROTECTION; SUITABLE FOR AMBIENT TEMPERATURES FROM –40°C TO 25°C; POLYESTER POWDER COAT GRAY FINISH; PASSIVE INFRARED (PIR) MOTION SENSOR AVAILABLE WITH AN OPTIONAL PASSIVE INFRARED (PIR) MOTION SENSOR CAPABLE OF DETECTING MOTION 360° AROUND THE LUMINAIRE. WHEN NO MOTION IS DETECTED FOR THE SPECIFIED TIME, THE MOTION RESPONSE SYSTEM REDUCES THE WATTAGE TO FACTORY PRESET LEVEL, REDUCING THE LIGHT LEVEL ACCORDINGLY. WHEN MOTION IS DETECTED BY THE PIR SENSOR, THE LUMINAIRE RETURNS TO FULL WATTAGE AND FULL LIGHT OUTPUT; UNIVERSAL VOLTAGE (120–277V); UL 1598, 8750 WET LOCATION LISTED; 5 YEAR WARRANTY | BEACON:<br>VIPER S SERIES<br>PART #:<br>VPS–36L–80–4K7–3–UNV–A–GYS–SCP/40F–BC<br>(SEE NOTES 1, 2 & 4) |
| B | 44.4 | LED 4' LENGTH LOW BAY FIXTURE. 6000 NOMINAL LUMENS; STANDARD EFFICIENCY; 4000K CCT; 80 CRI; COLD ROLLED STEEL FULL BODY HOUSING AND OPTICAL ASSEMBLY; DIFFUSE ACRYLIC LENS; ACESS PLATE ON THE BACK OF CHANNEL FOR ACCESS TO THE WIRING COMPARTMENT; HIGH–GLOSS BAKED WHITE ENAMEL FINISH. FIVE–STAGE IRON PHOSPHATE PRETREATMENT; HIGH–OUTPUT LEDS INTEGRATED ON A TWO–LAYER CIRCUIT BOARD; ELECTRONIC LED DRIVER; 0–10V DIMMING; DESIGNED TO WITHSTAND A MAXIMUM LINE SURGE OF 2.5KV AT 0.75KA; PENDANT MOUNTED; MULTIVOLT (120–277V); UL LISTED FOR DAMP LOCATION; 5 YEAR WARRANTY | LITHONIA LIGHTING:<br>PART #:<br>UFIT L48 6000LM SEF MVOLT GZ10 40K 80CRI WH |
| C | 55 | PENDANT MOUNTED LED LIGHT FIXTURE; 6400 NOMINAL LUMENS; 5000K CCT; 70 CRI; COPPER–FREE, CAST ALUMINUM HOUSING; TEMPERED GLASS LENS; 1/2" HUB; CAPTIVE STAINLESS STEEL FASTENERS AND INSERTS; TYPE V WIDE 120°; POLYESTER POWDER COAT GRAY FINISH; 50°C AMBIENT TEMPERATURE RATING; 120,000 HOUR L70 RATED LIFETIME PROJECTION; HAZARDOUS LOCATION UL844 CLASS I, DIV2; NEMA 4X, IP66, UL 1598 AND 1598A LISTED; MULTIVOLT (120–277V); FIVE–YEAR WARRANTY | LDPI INDUSTRIAL LIGHTING:<br>LE401 HAZARDOUS LOCATION SERIES:<br>PART #:<br>LE401–P5–V1–F3–W–PG |
| D | 40 | PENDANT MOUNTED LED LIGHT FIXTURE; 5000 NOMINAL LUMENS; 5000K CCT; 70 CRI; COPPER–FREE, CAST ALUMINUM HOUSING; TEMPERED GLASS LENS; 1/2" HUB; CAPTIVE STAINLESS STEEL FASTENERS AND INSERTS; TYPE V WIDE 93°; POLYESTER POWDER COAT GRAY FINISH; 50°C AMBIENT TEMPERATURE RATING; 120,000 HOUR L70 RATED LIFETIME PROJECTION; NEMA 4X, IP66, UL 1598 AND 1598A LISTED; MULTIVOLT (120–277V); FIVE–YEAR WARRANTY | LDPI INDUSTRIAL LIGHTING:<br>LE302 HIGH BAY/LOW BAY SERIES:<br>PART #:<br>LE302–L1–V1–5–F3–W–PG |
| E | 30 | LED EMERGENCY SCONCE; WALL MOUNTED FULL CUTOFF FIXTURE; SINGLE PIECE DIE–CAST ALUMINUM HOUSING AND DOOR FRAME; MEMORY RETENTIVE GASKET SEALS; STAINLESS STEEL HARDWARE; ACRYLIC DIFFUSER LENS; 3000 INITIAL LUMENS, 4000K, TYPE 4 FORWARD THROW LIGHT DISTRIBUTION; POLYESTER POWDERCOAT DARK BRONZE FINISH; LED THERMAL MANAGEMENT; UNIVERSAL VOLTAGE (120–277V); CSA CERTIFIED TO US STANDARDS; WET LOCATION; PHOTOCELL; INTEGRAL EMERGENCY BATTERY PACK; 5 YEAR WARRANTY | LITHONIA LIGHTING:<br>WST LED SERIES<br>PART #:<br>WST LED P2 40K VF MVOLT PE E7WH E7WC DDBXD |
| F | 72 | LED SCONCE; WALL MOUNTED FULL CUTOFF FIXTURE; SINGLE PIECE DIE–CAST ALUMINUM HOUSING AND DOOR FRAME; MEMORY RETENTIVE GASKET SEALS; STAINLESS STEEL HARDWARE; ACRYLIC DIFFUSER LENS; 6000 INITIAL LUMENS, 4000K, TYPE 4 FORWARD THROW LIGHT DISTRIBUTION; POLYESTER POWDERCOAT DARK BRONZE FINISH; LED THERMAL MANAGEMENT; UNIVERSAL VOLTAGE (120–277V); CSA CERTIFIED TO US STANDARDS; WET LOCATION; PHOTOCELL; 5 YEAR WARRANTY | LITHONIA LIGHTING:<br>WST LED SERIES<br>PART #:<br>WST LED P3 40K VF MVOLT PE DDBXD |
| G | 42 | 2'X2' LED FIXTURE, 4800 NOMINAL LUMEN OUTPUT, 80 CRI, 4000K, ONE PIECE DIE–FORMED 22 GA. COLD ROLLED STEEL HOUSING; INTEGRAL T–BAR GRID CLIPS, #12 PATTERN ACRYLIC LENS; LONG–LIFE LED; HIGH EFFIENCY DRIVER; PLUG–IN CONNECTORS OH LED BOARDS; 0–10V DIMMING DRIVER, UNIVERSAL VOLTAGE (120–277V), CSA LISTED TO US STANDARDS; 5 YEAR WARRANTY | LITHONIA LIGHTING:<br>2GTL SERIES<br>PART #:<br>2GTL 2 48L GZ10 LP840 |
| H | 55 | PENDANT MOUNTED LED LIGHT FIXTURE; 6400 NOMINAL LUMENS; 5000K CCT; 70 CRI; COPPER–FREE, CAST ALUMINUM HOUSING; TEMPERED GLASS LENS; 1/2" HUB; CAPTIVE STAINLESS STEEL FASTENERS AND INSERTS; TYPE V WIDE 120°; POLYESTER POWDER COAT GRAY FINISH; 50°C AMBIENT TEMPERATURE RATING; 120,000 HOUR L70 RATED LIFETIME PROJECTION; HAZARDOUS LOCATION UL844 CLASS I, DIV2; NEMA 4X, IP66, UL 1598 AND 1598A LISTED; MULTIVOLT (120–277V); FIVE–YEAR WARRANTY | LDPI INDUSTRIAL LIGHTING:<br>LE401 HAZARDOUS LOCATION SERIES<br>PART #:<br>LE401–P8–V1–F3–W–PG |
| EX | 3.8 | EXIT SIGN W/DIE CAST ALUMINUM HOUSING, WHITE BODY, BRUSHED ALUMINUM FACE, RED LED LAMPS, RED POLYCARBONATE LENS W/PRISMATIC DIFFUSER, SEALED NICKEL CADMIUM BATTERY, FULLY AUTOMATIC SOLID STATE CHARGER, FLAT OR OPENING MOUNTED AS REQUIRED, 120V, 12V DC | PHILIPS CHLORIDE: 55 LINE SERIES |
| EM | 15 | EMERGENCY LIGHTING UNIT, NEMA 4X RATED FIBERGLASS HOUSING WITH INDUSTRIAL GRAY FINISH, INPUT VOLTAGE 120/277 VAC, SOLID STATE BATTERY CHARGER, 12 VDC OPERATION, 90 MINUTE CAPACITY, 2–12 WATT HALOGEN SEALED BEAM LAMPS, EXTERNAL TEST SWITCH AND LED "READY" LIGHT, NICKEL CADMIUM BATTERY, UL 924 WET LOCATION LISTED, FULL 3 YEAR WARRANTY | PHILIPS CHLORIDE: VNX SERIES |
| EXX | 3 | LED EXIT SIGN FOR USE IN HAZARDOUS ENVIRONMENTS WHERE EXPLOSIVES MAY BE PRESENT; FOR USE WITH AC AND/OR EMERGENCY POWER; LED LIGHT SOURCE; MAINTENANCE–FREE 3 WATT LED SOURCE WITH A 25 YEAR LIFE EXPECTANCY; RED LETTERING ON ACRYLIC EDGE LIT PANEL; SINGLE OR DOUBLE FACE (REFER TO DRAWINGS); SOLID–STATE ELECTRONIC CIRCUITRY; 120/277 VAC 60HZ DUAL VOLTAGE INPUT; 3–HOUR SUSTAINED EMERGENCY OPERATION WITH SEALED NICKEL–CADAMIUM BATTERY BACKUP PROVIDING FULL LIGHT OUTPUT; COPPER–FREE CAST ALUMINUM ENCLOSURE WITH BAKED–ON EPOXY POWDER COAT FINISH; UL844; CLASS 1, DIVISION 1, GROUP C & D; CLASS 2, DIVISION 1, GROUPS E, F & G; NEMA 4X, IP66; UL 1598A MARINE OUTSIDE; UL 1598 – WET LOCATION; 5–YEAR LIMITED WARRANTY | HOLOPHANE: HDX SERIES |
| EMX | 7.5 | LED EMERGENCY ILLUMINATION FOR USE IN HAZARDOUS ENVIRONMENTS; HOUSING AND LAMP–HEADS ARE MADE OF COPPER–FREE (LESS THAN 0.4%) ALUMINUM WITH A BAKED ON ELECTRO–STATICALLY APPLIED EPOXY; HOUSING CONTAINS 7 EACH ¾" DRILLED AND TAPPED HOLES FOR THREADED CONDUIT; QUICK ACCESS TO INTERNAL WIRING AND CIRCUITRY; INTEGRAL REMOTE TEST STATION (PUSH–TO–TEST AND AC INDICATOR); THE LIGHTING FIXTURES CAN BE DIRECT PENDANT, REMOTE PENDANT, WALL OR CEILING MOUNTED; 2 EACH 30VDC, 10 WATT LED LAMP–HEADS; UNIVERSAL VOLTAGE 120–277V; FULLY AUTOMATIC SOLID–STATE CHARGER; LOW VOLTAGE DISCONNECT; LONG–LIFE NICKEL CADMIUM BATTERY; PROVIDES POWER UP TO 90 MINUTES; INTEGRAL AC–ON INDICATOR AND PUSH–TO–TEST STATION; FRONT COVER INCLUDES AUTOMATIC SAFETY DISCONNECT OF BATTERY POWER WHEN REMOVED; 15 MINUTE TIME DELAY WILL HOLD LAMPS ON FOR APPROX. 15 MINUTES AFTER AC POWER IS RESTORED; LED'S RATED FOR 100,000 HOURS OR 10 YEARS; UL924 EMERGENCY LISTED; UL844 HAZARDOUS LOCATION LISTED; CLASS 1, DIVISION 1, GROUP C & D; CLASS 2, DIVISION 1, GROUPS E, F & G; NEMA 4X, IP66; UL 1598 – WET LOCATION; 5–YEAR LIMITED WARRANTY | DUAL–LITE: HLEBS SERIES |

NOTE:

1. PROVIDE A 20'–0" HIGH, ROUND TAPERED ALUMINUM POLE. POLE SHALL HAVE A NATURAL ALUMINUM FINISH AND MEET WIND LOADS AND GUST FACTOR FOR RELATED PROJECT LOCATION. POLE SHALL BE MOUNTED TO A STANDARD LIGHTING BASE PER DETAIL L1 ON SHEET ED–1. SUITABLE ANCHOR BOLTS, BASE COVER, GROUND LUG, AND VIBRATION PAD FURNISHED WITH POLE. POLE SHALL BE MANUFACTURED BY HAPCO OR APPROVED EQUAL.

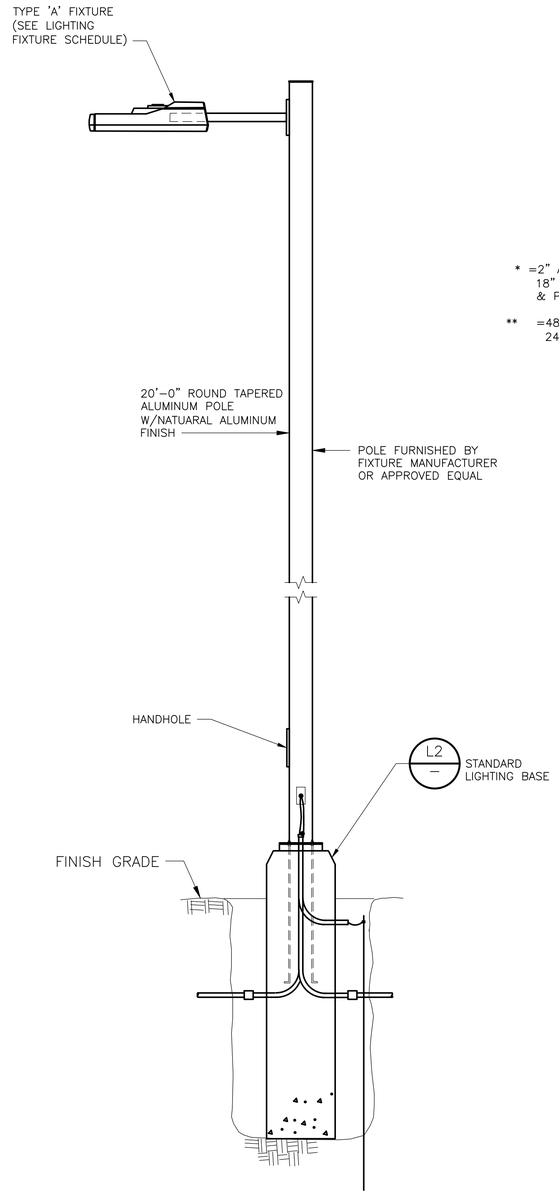


POLE MOUNTED LUMINAIRE
DETAIL L1
NTS

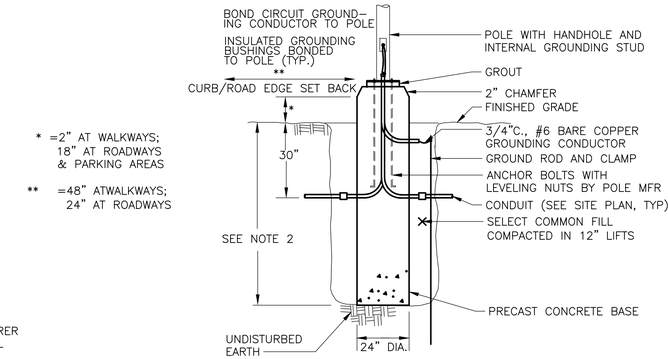


* =2" AT WALKWAYS; 18" AT ROADWAYS & PARKING AREAS

** =48" ATWALKWAYS; 24" AT ROADWAYS

NOTES:

1. LIGHT POLE FOUNDATION SHALL BE A PRECAST CONCRETE FOUNDATION DESIGNED BY A FLORIDA REGISTERED PROFESSIONAL ENGINEER ENGAGED AT THE EXPENSE OF THE CONTRACTOR. DESIGN SPEED SHALL BE IN ACCORDANCE WITH ASCE 7–10 FOR THE PROJECT SPECIFIC SITE. CONTRACTOR SHALL CONFIRM SOIL CONDITIONS WITH A FLORIDA REGISTERED PROFESSIONAL GEOTECHNICAL ENGINEER. DESIGN SHALL BE SIGNED & SEALED BY A REGISTERED PROFESSIONAL ENGINEER, REGISTERED IN THE STATE OF FLORIDA.
2. EMBEDMENT DEPTH AS REQUIRED PER DELEGATE ENGINEER. MIN. EMBEDMENT IN CLAYEY SOILS 6'–6", MIN EMBEDMENT IN SANDY SOILS 4'–6".
3. REFER TO SPECIFICATIONS FOR MATERIALS.

STANDARD LIGHTING BASE
DETAIL L2
NTS

DATE:
SPENCER J. PERRY JR
PE NO. 62587

| REV. NO. | DATE | DRWN | CHKD | REMARKS |
|---|---|---|---|---|

DESIGNED BY: O. CRUZ
DRAWN BY: R. CARTER
SHEET CHK'D BY: X
CROSS CHK'D BY: X
APPROVED BY: S. PERRY
DATE: FEBRUARY 2020

CDM Smith
4651 Salisbury Road, Suite 420
Jacksonville, FL 32256
Tel: (904) 731-7109
FL COA No. EB-0000020

JEA

WILSON BLVD. (180-45) AND 118th ST. (180-47)
MASTER PUMP STATION IMPROVEMENTS

LIGHTING FIXTURE SCHEDULE

PROJECT NO. 6103–234169
FILE NAME: E035NFSH.DWG

SHEET NO.
E-35

60% SUBMITTAL - NOT FOR CONSTRUCTION

XREFs: [CDMS_2234] Images: []
Last saved by: RUCKRM Time: 2/14/2020 4:43:02 PM
pw:\\cdmsmith-azo2-pw.bentley.com:PW_XM1\6103\234169 JEA PDB\04 Design Services NM_60%\09 Electrical\10 CADD\E035NFSH.dwg
©2020 CDM SMITH ALL RIGHTS RESERVED.
REUSE OF DOCUMENTS: THESE DOCUMENTS AND DESIGNS PROVIDED BY PROFESSIONAL SERVICE, INCORPORATED HEREIN, ARE THE PROPERTY OF CDM SMITH AND ARE NOT TO BE USED, IN WHOLE OR PART, FOR ANY OTHER PROJECT WITHOUT THE WRITTEN AUTHORIZATION OF CDM SMITH.

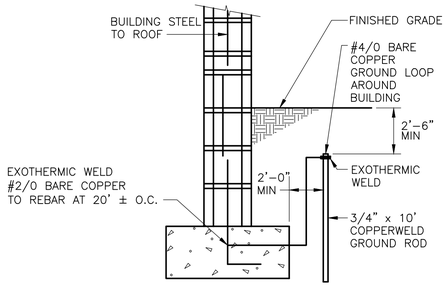


BULIDING STRUCTURE BONDING

DETAIL A

NTS

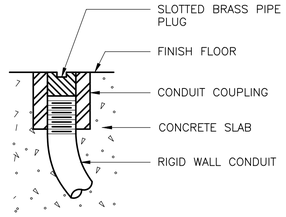


CONDUIT TERMINATION STUB OUT

DETAIL B

NTS

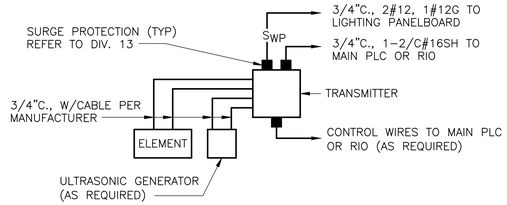


TYPICAL TRANSMITTER

DETAIL C

NTS

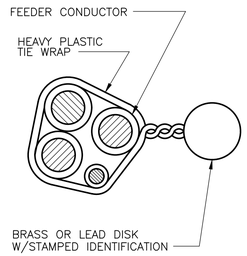


U.G. CABLE TAG

DETAIL D

NTS
E-ELECTRICAL
T-TELEPHONE
C-CONTROL

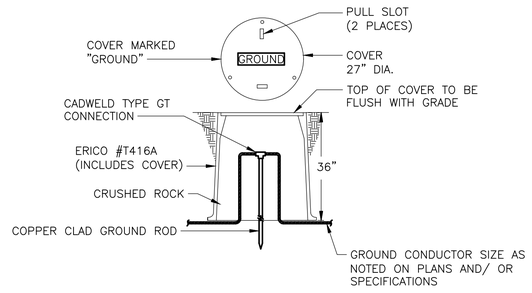


NOTE:

1. TO IMPROVE SYSTEM RESISTANCE, ERICO GEM MAY BE USED AS A BACKFILL MATERIAL IN AN AUGERED HOLE.

GROUND ROD TEST WELL STATION

DETAIL E

NTS

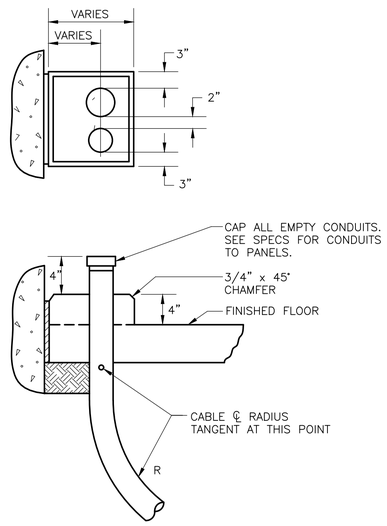


TYPICAL CONDUIT THROUGH SLAB

DETAIL F

NTS

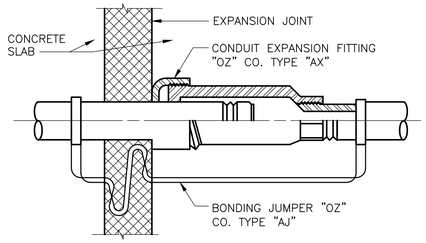


EXPANSION FITTING

DETAIL G

NTS

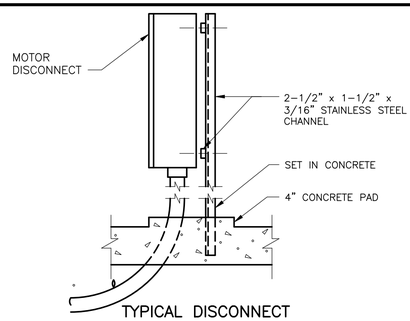


TYPICAL DISCONNECT

DETAIL H

NTS

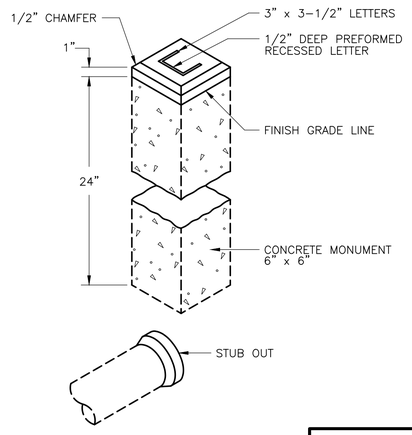


CONDUIT STUB MONUMENT

DETAIL J

NTS

DATE:
SPENCER J. PERRY JR
PE NO. 62587

| REV. NO. | DATE | DRWN | CHKD | REMARKS |
|---|---|---|---|---|
| | | | | |

DESIGNED BY: O. CRUZ
DRAWN BY: R. RUCK
SHEET CHK'D BY: X
CROSS CHK'D BY: X
APPROVED BY: S. PERRY
DATE: FEBRUARY 2020

CDM Smith
4651 Salisbury Road, Suite 420
Jacksonville, FL 32256
Tel: (904) 731-7109
FL COA No. EB-0000020

JEA

WILSON BLVD. (180-45) AND 118th ST. (180-47)
MASTER PUMP STATION IMPROVEMENTS

ELECTRICAL DETAILS I

PROJECT NO. 6103-234169
FILE NAME: ED01NFDT.DWG

SHEET NO.
ED-1

60% SUBMITTAL - NOT FOR CONSTRUCTION

XREFs: [CDMS_2234] Images: []
Last saved by: HUNTERJS Time: 1/10/2020 5:27:32 PM
pw:\\pw.cdmsmith.com:PW_XM1\6103\234169 JEA PDB\04 Design Services NM_60%\09 Electrical\10 CADD\ED01NFDT.dwg
©2020 CDM SMITH ALL RIGHTS RESERVED.
REUSE OF DOCUMENTS: THESE DOCUMENTS AND DESIGNS PROVIDED BY PROFESSIONAL SERVICE, INCORPORATED HEREIN, ARE THE PROPERTY OF CDM SMITH AND ARE NOT TO BE USED, IN WHOLE OR PART, FOR ANY OTHER PROJECT WITHOUT THE WRITTEN AUTHORIZATION OF CDM SMITH.

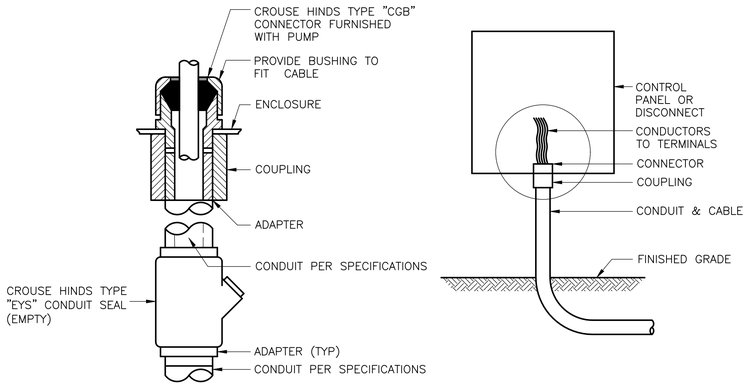


WATER–TIGHT CONNECTION

DETAIL K

NTS

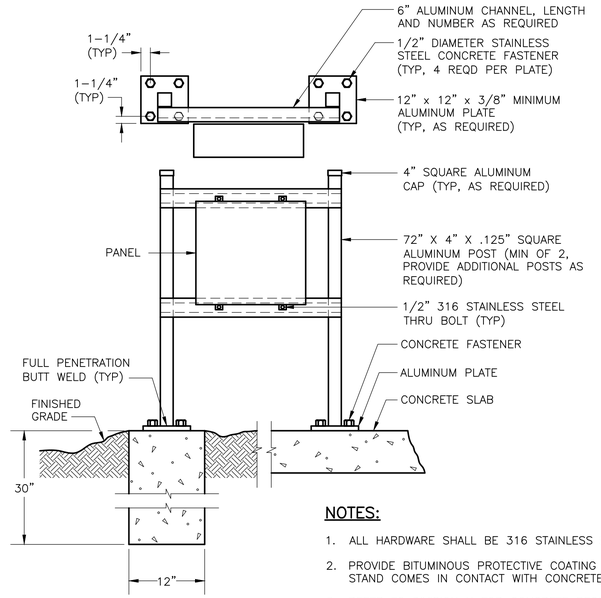


NOTES:

1. ALL HARDWARE SHALL BE 316 STAINLESS STEEL.
2. PROVIDE BITUMINOUS PROTECTIVE COATING WHERE STAND COMES IN CONTACT WITH CONCRETE.
3. REFER TO DIVISION X FOR CONCRETE REQUIREMENTS.

PANEL MOUNTING

DETAIL L

NTS

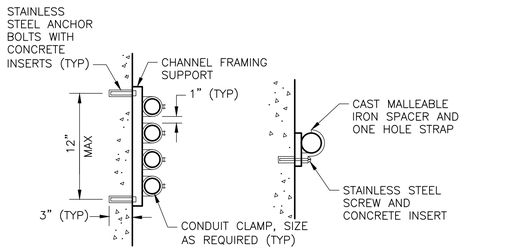


WALL MOUNTED CEILING OR WALL MOUNTED

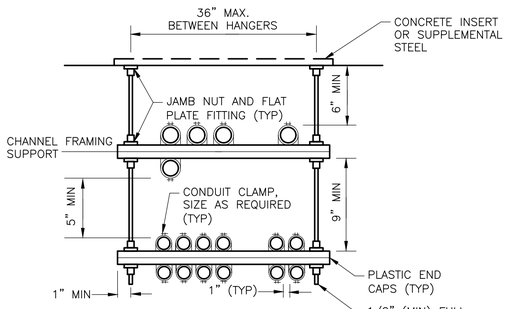


TRAPEZE MOUNTED

CONDUIT MOUNTING

DETAIL M

NTS

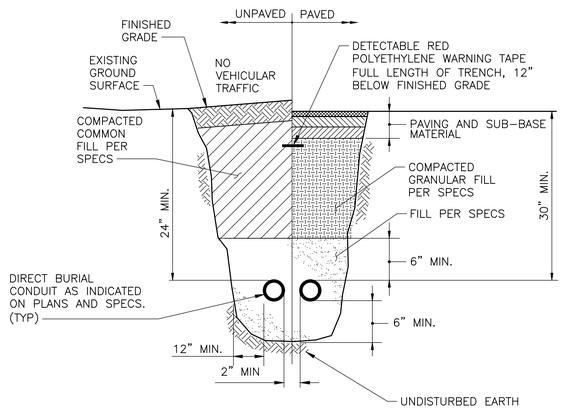


TYPICAL DIRECT BURIED CONDUIT INSTALLATION

DETAIL N

NTS

DATE:
SPENCER J. PERRY JR
PE NO. 62587

| REV. NO. | DATE | DRWN | CHKD | REMARKS |
|---|---|---|---|---|
| | | | | |

DESIGNED BY: O. CRUZ
DRAWN BY: R. RUCK
SHEET CHK'D BY: X
CROSS CHK'D BY: X
APPROVED BY: S. PERRY
DATE: FEBRUARY 2020

CDM Smith
4651 Salisbury Road, Suite 420
Jacksonville, FL 32256
Tel: (904) 731-7109
FL COA No. EB-0000020

JEA

WILSON BLVD. (180-45) AND 118th ST. (180-47)
MASTER PUMP STATION IMPROVEMENTS

ELECTRICAL DETAILS II

PROJECT NO. 6103–234169
FILE NAME: ED02NFDT.DWG

SHEET NO.
ED-2

60% SUBMITTAL - NOT FOR CONSTRUCTION

XREFs: [CDMS_2234] Images: []
Last saved by: HUNTERJS Time: 1/10/2020 5:27:16 PM
pw:\\pw.cdmsmith.com:PW_XM\6103\234169 JEA PDB\04 Design Services NM_60%\09 Electrical\10 CADD\ED02NFDT.dwg
©2020 CDM SMITH ALL RIGHTS RESERVED.
REUSE OF DOCUMENTS: THESE DOCUMENTS AND DESIGNS PROVIDED BY PROFESSIONAL SERVICE, INCORPORATED HEREIN, ARE THE PROPERTY OF CDM SMITH AND ARE NOT TO BE USED, IN WHOLE OR PART, FOR ANY OTHER PROJECT WITHOUT THE WRITTEN AUTHORIZATION OF CDM SMITH.

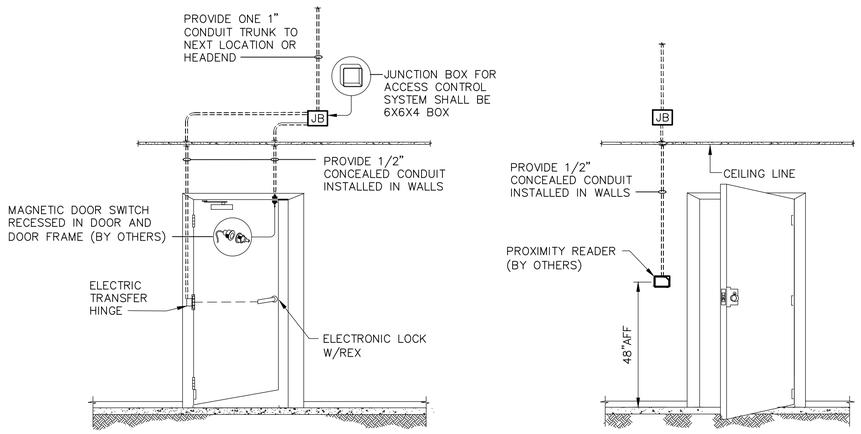


SINGLE DOOR – CARD IN – ELECTRONIC LOCK

DETAIL AA
NTS –

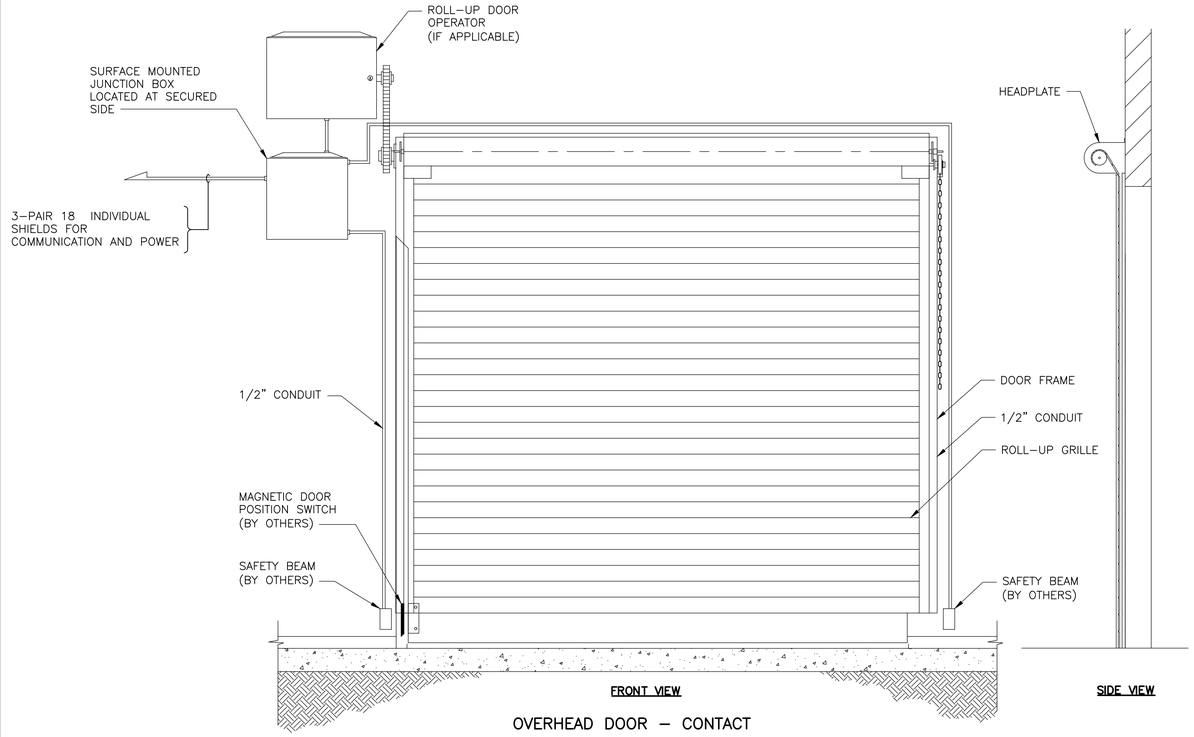


OVERHEAD DOOR – CONTACT

DETAIL CC
NTS –

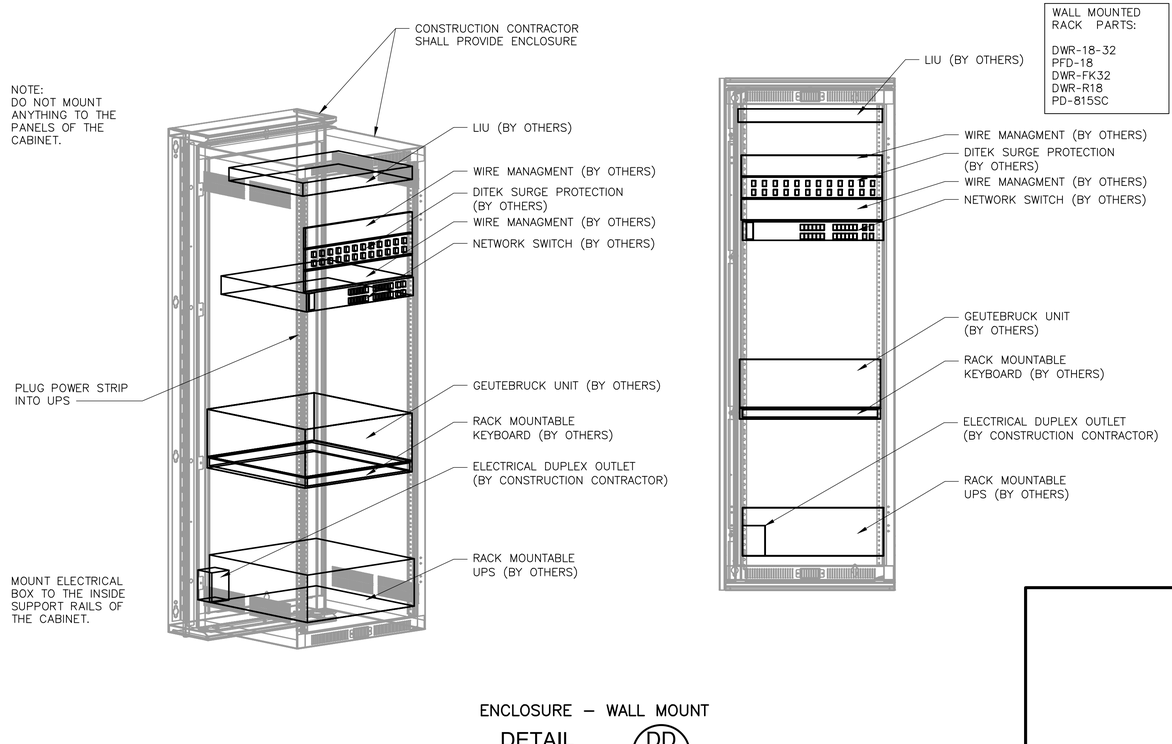


WALL MOUNTED RACK PARTS:

DWR-18-32
PFD-18
DWR-FK32
DWR-R18
PD-815SC

ENCLOSURE – WALL MOUNT

DETAIL DD
NTS –

DATE:
SPENCER J. PERRY JR
PE NO. 62587

| REV. NO. | DATE | DRWN | CHKD | REMARKS |
|---|---|---|---|---|
| | | | | |

DESIGNED BY: O. CRUZ
DRAWN BY: R. RUCK
SHEET CHK'D BY: X
CROSS CHK'D BY: X
APPROVED BY: S. PERRY
DATE: FEBRUARY 2020

CDM Smith
4651 Salisbury Road, Suite 420
Jacksonville, FL 32256
Tel: (904) 731-7109
FL COA No. EB-0000020

JEA

WILSON BLVD. (180-45) AND 118th ST. (180-47)
MASTER PUMP STATION IMPROVEMENTS

SECURITY DETAILS

PROJECT NO. 6103-234169
FILE NAME: ED03NFDT.DWG

SHEET NO.
ED-3

60% SUBMITTAL - NOT FOR CONSTRUCTION

XREFs: [CDMS_2234] Images: []
Last saved by: HUNTERJS Time: 1/3/2020 1:33:11 PM
pw:\\pw.cdmsmith.com:PW_XM1\6103\234169 JEA PDB\04 Design Services NM_60%\09 Electrical\10 CADD\ED03NFDT.dwg
©2020 CDM SMITH ALL RIGHTS RESERVED.
REUSE OF DOCUMENTS: THESE DOCUMENTS AND DESIGNS PROVIDED BY PROFESSIONAL SERVICE, INCORPORATED HEREIN, ARE THE PROPERTY OF CDM SMITH AND ARE NOT TO BE USED, IN WHOLE OR PART, FOR ANY OTHER PROJECT WITHOUT THE WRITTEN AUTHORIZATION OF CDM SMITH.

# GENERAL INSTRUMENT OR FUNCTION SYMBOLS

| SHARED DISPLAY/ SHARED CONTROL | | | | |
|---|---|---|---|---|
| PRIMARY CHOICE | SECONDARY CHOICE | COMPUTER SOFTWARE | DISCRETE | LOCATION AND ACCESSIBILITY |
|  |  |  |  | FIELD MOUNTED AND NORMALLY OPERATOR ACCESSIBLE |
|  |  |  |  | PRIMARY CONTROL PANEL MOUNTED AND NORMALLY OPERATOR ACCESSIBLE |
|  |  |  |  | PRIMARY CONTROL PANEL MOUNTED AND NOT NORMALLY OPERATOR ACCESSIBLE |
|  |  |  |  | SECONDARY CONTROL PANEL MOUNTED AND NORMALLY OPERATOR ACCESSIBLE |
|  |  |  |  | SECONDARY CONTROL PANEL MOUNTED AND NOT NORMALLY OPERATOR ACCESSIBLE |


INSTRUMENTS SHARING COMMON HOUSING


PILOT LIGHT

## MISCELLANEOUS SYMBOLS


MOTOR


INDICATES INTERLOCK OR LOGIC IN A MOTOR CONTROL CENTER


INDICATES GENERAL OR MISCELLANEOUS HARDWIRED INTERLOCK


MOTOR STARTER


SILICONE CONTROL RECTIFIER


VARIABLE FREQUENCY DRIVE


PURGE OR FLUSHING DEVICE

## TYPICAL TAG NUMBERS & DESIGNATION

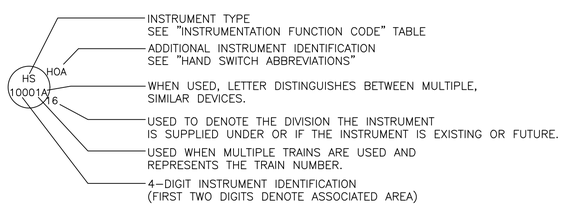


## HAND SWITCH ABBREVIATIONS

AO = AUTO/OFF
AM = AUTO/MANUAL
CM = COMPUTER/MANUAL
CL = COMPUTER/LOCAL
E-STOP = EMERGENCY STOP
FR = FORWARD/REVERSE
FOR = FORWARD/OFF/REVERSE
FS = FAST SLOW
FOS = FAST/OFF/SLOW
HOA = HAND/OFF/AUTO
LLS = LEAD/LAG/STANDBY
LOC = LOCAL/OFF/COMPUTER
LOR = LOCAL/OFF/REMOTE
LOS = LOCKOUT/STOP
LA = LOCAL/AUTO
LR = LOCAL/REMOTE
OC = OPEN/CLOSE
OCA = OPEN/CLOSE/AUTO
OO = ON/OFF
OOA = ON/OFF/AUTO
OSC = OPEN/STOP/CLOSE
RSL = RAISE/STOP/LOWER
SS = START/STOP
SOR = START/OFF/RESET

# INSTRUMENTATION FUNCTION CODE

| | FIRST LETTERS | | SUCCEEDING LETTERS | | |
|---|---|---|---|---|---|
| | COLUMN 1 | COLUMN 2 | COLUMN 3 | COLUMN 4 | COLUMN 5 |
| | MEASURED/INITIATING VARIABLE | VARIABLE MODIFIER | READOUT/PASSIVE FUNCTION | OUTPUT/ACTIVE FUNCTION | FUNCTION MODIFIER |
| A | ANALYSIS | | ALARM | | |
| B | BURNER, COMBUSTION | | USER'S CHOICE | USER'S CHOICE | USER'S CHOICE |
| C | USER'S CHOICE | | | CONTROL | CLOSED |
| D | USER'S CHOICE | DIFFERENCE, DIFFERENTIAL | | | DEVIATION |
| E | VOLTAGE | | SENSOR, PRIMARY ELEMENT | | |
| F | FLOW, FLOW RATE | RATIO | | | |
| G | USER'S CHOICE | | GLASS, GAUGE, VIEWING DEVICE | | |
| H | HAND | | | | HIGH |
| I | CURRENT | | INDICATE | | |
| J | POWER | | SCAN | | |
| K | TIME, SCHEDULE | TIME RATE OF CHANGE | | CONTROL STATION | |
| L | LEVEL | | LIGHT | | LOW |
| M | MOISTURE | | | | MIDDLE, INTERMEDIATE |
| N | USER'S CHOICE | | USER'S CHOICE | USER'S CHOICE | USER'S CHOICE |
| O | USER'S CHOICE | | ORIFICE, RESTRICTION | | OPEN |
| P | PRESSURE | | POINT (TEST CONNECTION) | | |
| Q | QUANTITY | INTEGRATE, TOTALIZE | INTEGRATE, TOTALIZE | | |
| R | RADIATION | | RECORD | | RUN |
| S | SPEED, FREQUENCY | SAFETY | | SWITCH | STOP |
| T | TEMPERATURE | | | TRANSMIT | |
| U | MULTIVARIABLE | | MULTIFUNCTION | MULTIFUNCTION | |
| V | VIBRATION, MECHANICAL, ANALYSIS | | | VALVE, DAMPER, LOUVER | |
| W | WEIGHT, FORCE | | WELL, PROBE | | |
| X | UNCLASSIFIED (1) | X-AXIS | ACCESSORY DEVICES, UNCLASSIFIED (1) | UNCLASSIFIED (1) | UNCLASSIFIED (1) |
| Y | EVENT, STATE, PRESENCE | Y-AXIS | | AUXILIARY DEVICES | |
| Z | POSITION, DIMENSION | Z-AXIS, SAFETY INSTRUMENT SYSTEM | | DRIVER, ACTUATOR, UNCLASSIFIED, FINAL CONTROL ELEMENT | |

TABLE NOTES:
(1) WHEN USED SYMBOL OR SIGNAL LINE IS ANNOTATED.

## INSTRUMENT LINE SYMBOLS

ELECTRICAL SIGNAL
TELEPHONE SIGNAL
ELECTROMAGNETIC OR SONIC SIGNAL (GUIDED)
ELECTROMAGNETIC OR SONIC SIGNAL (UNGUIDED)
PNEUMATIC SIGNAL
CAPILLARY TUBE
HYDRAULIC SUPPLY
VENDOR SUPPLIED CABLE
COMMUNICATION LINK – COPPER (HARDWIRED)
COMMUNICATION LINK – FIBER OPTICS

## ELECTRICAL / AIR SOURCES

UPS – – – ▶ UPS POWERED ELECTRICAL SOURCE
ES – – – ▶ ELECTRICAL SOURCE
IA ——▶ INSTRUMENT AIR SOURCE

# I/O SIGNALS

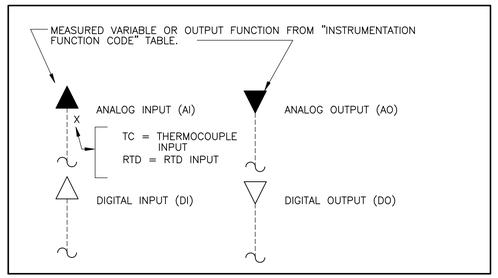


# GENERAL NOTES

1. THIS LEGEND APPLIES TO P&IDS ONLY AND MAY DIFFER FROM LEGENDS FOR OTHER SHEETS.

2. IN GENERAL THIS LEGEND SHEET AND THE P&IDS ARE BASED ON THE INTERNATIONAL SOCIETY OF AUTOMATION (ISA) STANDARDS AND RECOMMENDED PRACTICES FOR INSTRUMENTATION AND CONTROL. SOME MODIFICATIONS, ADDITIONS AND ALTERATIONS HAVE BEEN MADE AS REQUIRED TO ACCOMMODATE PROJECT REQUIREMENTS.

3. SOME PROCESS ITEMS SUCH AS EQUIPMENT ISOLATION VALVES, BYPASS LINES, ETC., WHICH ARE NOT CRITICAL FOR AN UNDERSTANDING OF THE INSTRUMENTATION FUNCTIONS ARE NOT SHOWN ON THE P&IDS.

4. SEE ELECTRICAL AND MECHANICAL SHEETS AND SPECIFICATIONS FOR ADDITIONAL CONTROL AND INTERLOCK REQUIREMENTS.

5. LIGHTER WEIGHT LINES, SHOWN AS ——— , INDICATE EQUIPMENT, INSTRUMENTS OR PIPING THAT ARE *EXISTING*. WEIGHTED LINES, SHOWN AS_____ OR HEAVIER _____ , INDICATE EQUIPMENT, INSTRUMENTS OR PIPING THAT ARE NEW. DASHED WEIGHTED LINES, SHOWN AS _ _ _ _ , INDICATED EQUIPMENT, INSTRUMENTS OR PIPING THAT ARE GROUPED AS A PACKAGE.

6. REFER TO SHEET I-2 FOR ADDITIONAL NOTES.

# PRIMARY ELEMENTS


MAGNETIC FLOW METER


TURBINE OR PROPELLER FLOW METER

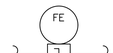
AVERAGING PITOT TUBE

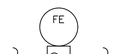
ULTRASONIC FLOW METER

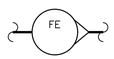
ROTAMETER

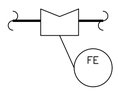
WEIR

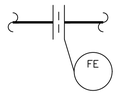
ORIFICE PLATE

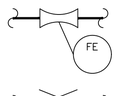
VENTURI TUBE

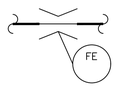
FLUME



GENERAL INSERTION FLOW METER


THERMAL MASS FLOW METER


FLOAT SWITCH LEVEL SENSOR


ULTRASONIC LEVEL SENSOR


RADAR LEVEL SENSOR


CAPACITANCE LEVEL SENSOR


PRESSURE GAUGE


DIFFERENTIAL PRESSURE GAUGE


TEMPERATURE GAUGE



GENERAL ANALYZER

# GENERAL ABBREVIATIONS

| | |
|---|---|
| AI | ANALOG IN |
| AO | ANALOG OUT |
| CPU | CENTRAL PROCESSOR UNIT |
| DI | DIGITAL OR DISCRETE INPUT |
| DO | DIGITAL OUTPUT |
| FC | FAIL CLOSED |
| FO | FAIL OPEN OR FIBER OPTIC |
| HMI | HUMAN MACHINE INTERFACE |
| MCC | MOTOR CONTROL CENTER |
| NC | NORMALLY CLOSED |
| NPW | NON-POTABLE WATER |
| NO | NORMALLY OPEN |
| PLC | PROGRAMMABLE LOGIC CONTROLLER |
| PW | PLANT WATER |
| RIO | REMOTE INPUT/OUTPUT |
| UPS | UNINTERRUPTIBLE POWER SUPPLY |
| VFD | VARIABLE FREQUENCY DRIVE |

| REV. NO. | DATE | DRWN | CHKD | REMARKS |
|---|---|---|---|---|

DESIGNED BY: W. WHITMORE
DRAWN BY: A. CARTER
SHEET CHK'D BY: W. WHITMORE
CROSS CHK'D BY: D. UBERT
APPROVED BY: W. WHITMORE
DATE: JANUARY 2020

CDM Smith
4651 Salisbury Road, Suite 420
Jacksonville, FL 32256
Tel: (904) 731-7109
FL COA No. EB-0000020

JEA

WILSON BLVD. (180-45) AND 118th ST. (180-47)
MASTER PUMP STATION IMPROVEMENTS

INSTRUMENTATION LEGEND
(SHEET 1 OF 2)

PROJECT NO. 6103-234169
FILE NAME: I001SYMB.DWG
SHEET NO.
I-1

60% SUBMITTAL - NOT FOR CONSTRUCTION

THESE DOCUMENTS AND DESIGNS PROVIDED BY PROFESSIONAL SERVICE, INCORPORATED HEREIN, ARE THE PROPERTY OF CDM SMITH AND ARE NOT TO BE USED, IN WHOLE OR PART, FOR ANY OTHER PROJECT WITHOUT THE WRITTEN AUTHORIZATION OF CDM SMITH.
© 2020 CDM SMITH ALL RIGHTS RESERVED.
REUSE OF DOCUMENTS:

XREFs: [CDMS_2234] Images: []
Last saved by: CHARTYRW Time: 2/12/2020 3:54:15 PM
C:\Users\chartyrw\AppData\Local\Autodesk\AutoCAD Plant 3D\CollaborationCache\6103_234169\PID DWG\I001SYMB.dwg

## TYPICAL PIPE TAG NUMBERS & DESIGNATION

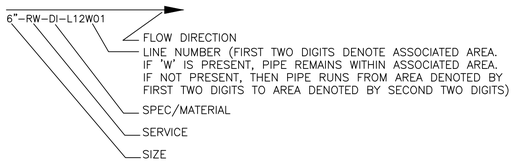


## PIPE LINE SYMBOLS

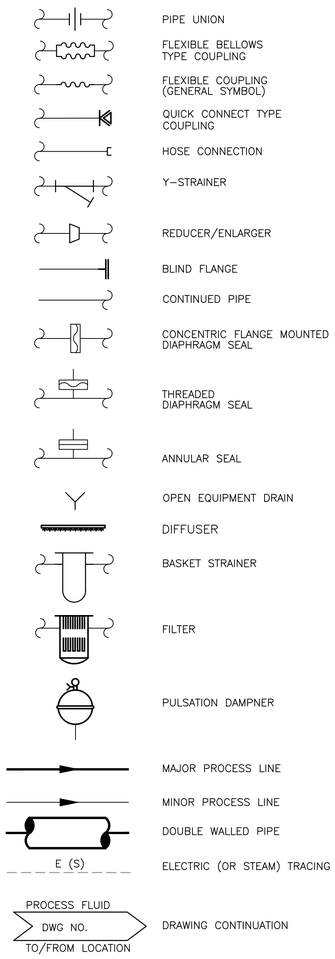


## VALVE SYMBOLS

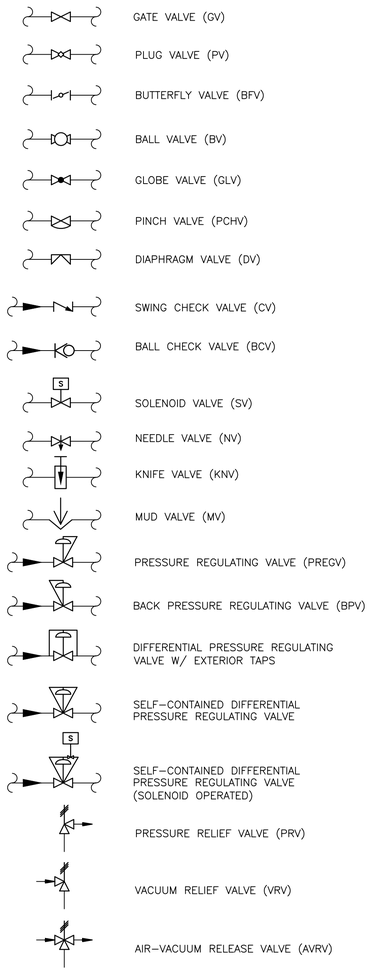


## VALVE ACTUATORS

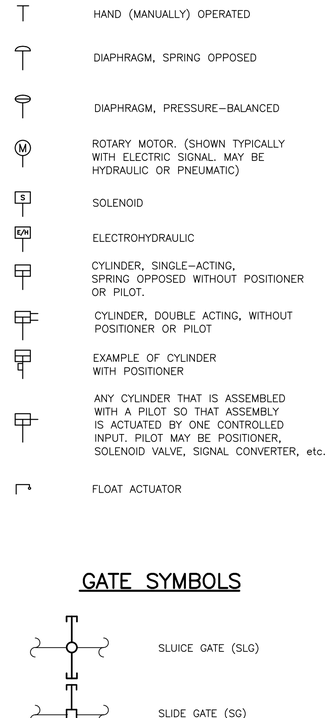


## GATE SYMBOLS

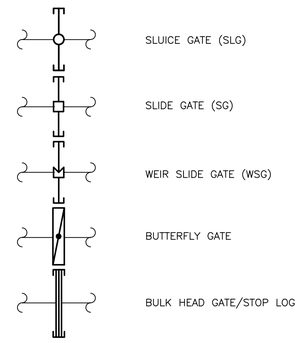


## TYPICAL EQUIPMENT TAG NUMBERS & DESIGNATION

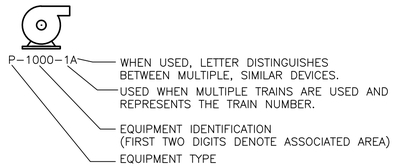


## PROCESS EQUIPMENT

PARTIAL LIST
ADDITIONAL SYMBOLS MAY BE SHOWN ON THE FLOW DIAGRAMS

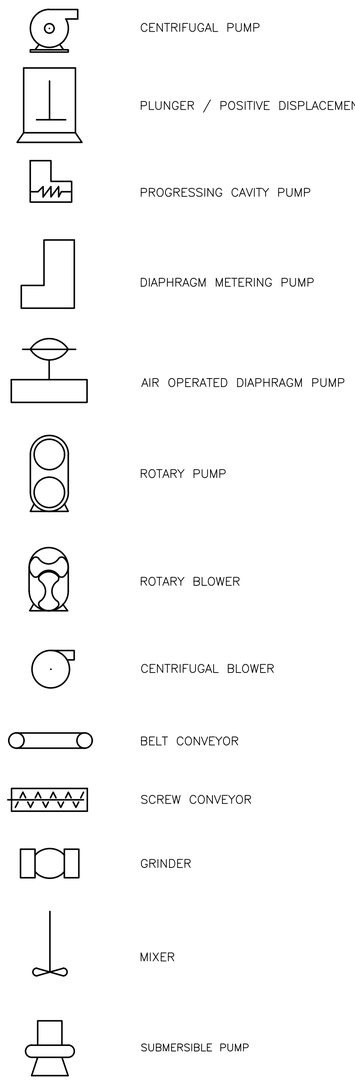


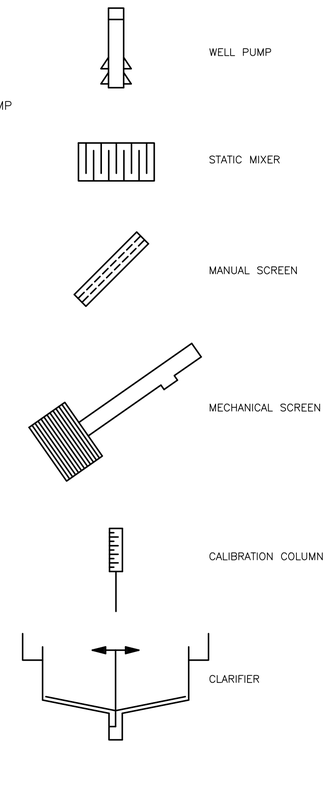


## GENERAL NOTES

1. REFER TO SHEET I–1 FOR ADDITIONAL NOTES

| REV. NO. | DATE | DRWN | CHKD | REMARKS |
|---|---|---|---|---|
| | | | | |

DESIGNED BY: W. WHITMORE
DRAWN BY: A. CARTER
SHEET CHK'D BY: W. WHITMORE
CROSS CHK'D BY: D. UBERT
APPROVED BY: W. WHITMORE
DATE: JANUARY 2020


CDM Smith
4651 Salisbury Road, Suite 420
Jacksonville, FL 32256
Tel: (904) 731-7109
FL COA No. EB-0000020


JEA

WILSON BLVD. (180-45) AND 118th ST. (180-47)
MASTER PUMP STATION IMPROVEMENTS

INSTRUMENTATION LEGEND
(SHEET 2 OF 2)

PROJECT NO. 6103–234169
FILE NAME: I002SYMB.DWG
SHEET NO. I-2

60% SUBMITTAL - NOT FOR CONSTRUCTION


XREFs: [CDMS_2234] Images: []
Last saved by: CHARITYRW Time: 12/18/2019 6:58:01 PM
C:\Users\charityrw\AppData\Local\Autodesk\AutoCAD Plant 3D\CollaborationCache\6103_234169\PID DWG\I002SYMB.dwg
2020 CDM SMITH ALL RIGHTS RESERVED.
REUSE OF DOCUMENTS: THESE DOCUMENTS AND DESIGNS PROVIDED BY PROFESSIONAL SERVICE, INCORPORATED HEREIN, ARE THE PROPERTY OF CDM SMITH AND ARE NOT TO BE USED, IN WHOLE OR PART, FOR ANY OTHER PROJECT WITHOUT THE WRITTEN AUTHORIZATION OF CDM SMITH.

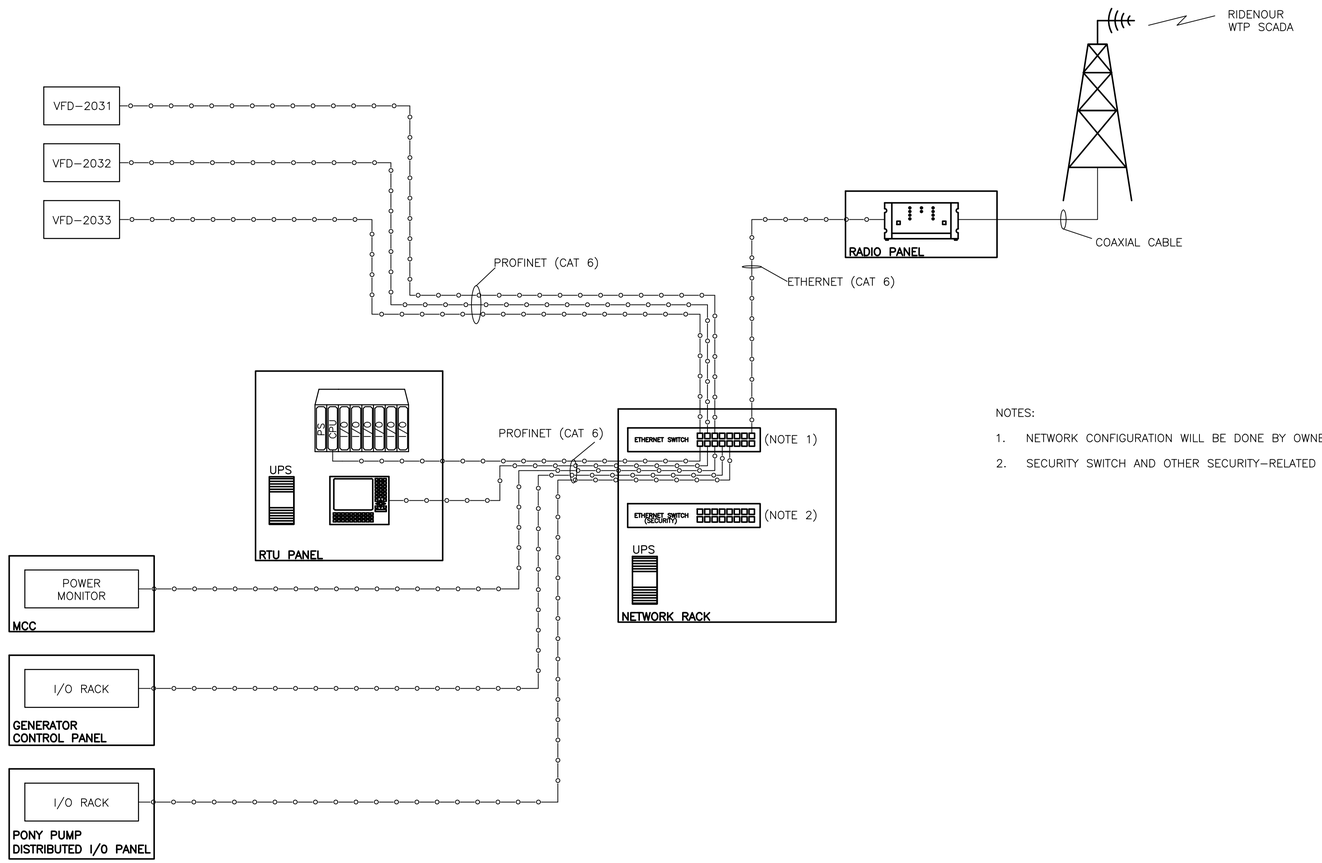


NOTES:

1. NETWORK CONFIGURATION WILL BE DONE BY OWNER IN CONJUNCTION WITH PROGRAMMING SERVICES. REFER TO SPECIFICATIONS SECTION 406100.
2. SECURITY SWITCH AND OTHER SECURITY-RELATED EQUIPMENT WILL BE FURNISHED AND INSTALLED BY OWNER.

| REV. NO. | DATE | DRWN | CHKD | REMARKS |
|---|---|---|---|---|
| | | | | |

DESIGNED BY: W. WHITMORE
DRAWN BY: J. LOWE
SHEET CHK'D BY: W. WHITMORE
CROSS CHK'D BY: D. UBERT
APPROVED BY: W. WHITMORE
DATE: JANUARY 2020

CDM Smith
4651 Salisbury Road, Suite 420
Jacksonville, FL 32256
Tel: (904) 731-7109
FL COA No. EB-0000020

JEA

WILSON BLVD. (180-45) AND 118th ST. (180-47)
MASTER PUMP STATION IMPROVEMENTS

CONTROL BLOCK DIAGRAM
WILSON BLVD.

PROJECT NO. 6103-234169
FILE NAME: I003PIDT.DWG

SHEET NO.
I-3

60% SUBMITTAL - NOT FOR CONSTRUCTION

XREFs: [CDMS_2234] Images: []
Last saved by: CHARITYRW Time: 2/19/2020 2:45:54 PM
C:\Users\charityrw\AppData\Local\Autodesk\AutoCAD Plant 3D\CollaborationCache\6103_234169\PID DWG\I003PIDT.dwg
© 2020 CDM SMITH ALL RIGHTS RESERVED.
REUSE OF DOCUMENTS: THESE DOCUMENTS AND DESIGNS PROVIDED BY PROFESSIONAL SERVICE, INCORPORATED HEREIN, ARE THE PROPERTY OF CDM SMITH AND ARE NOT TO BE USED, IN WHOLE OR PART, FOR ANY OTHER PROJECT WITHOUT THE WRITTEN AUTHORIZATION OF CDM SMITH.

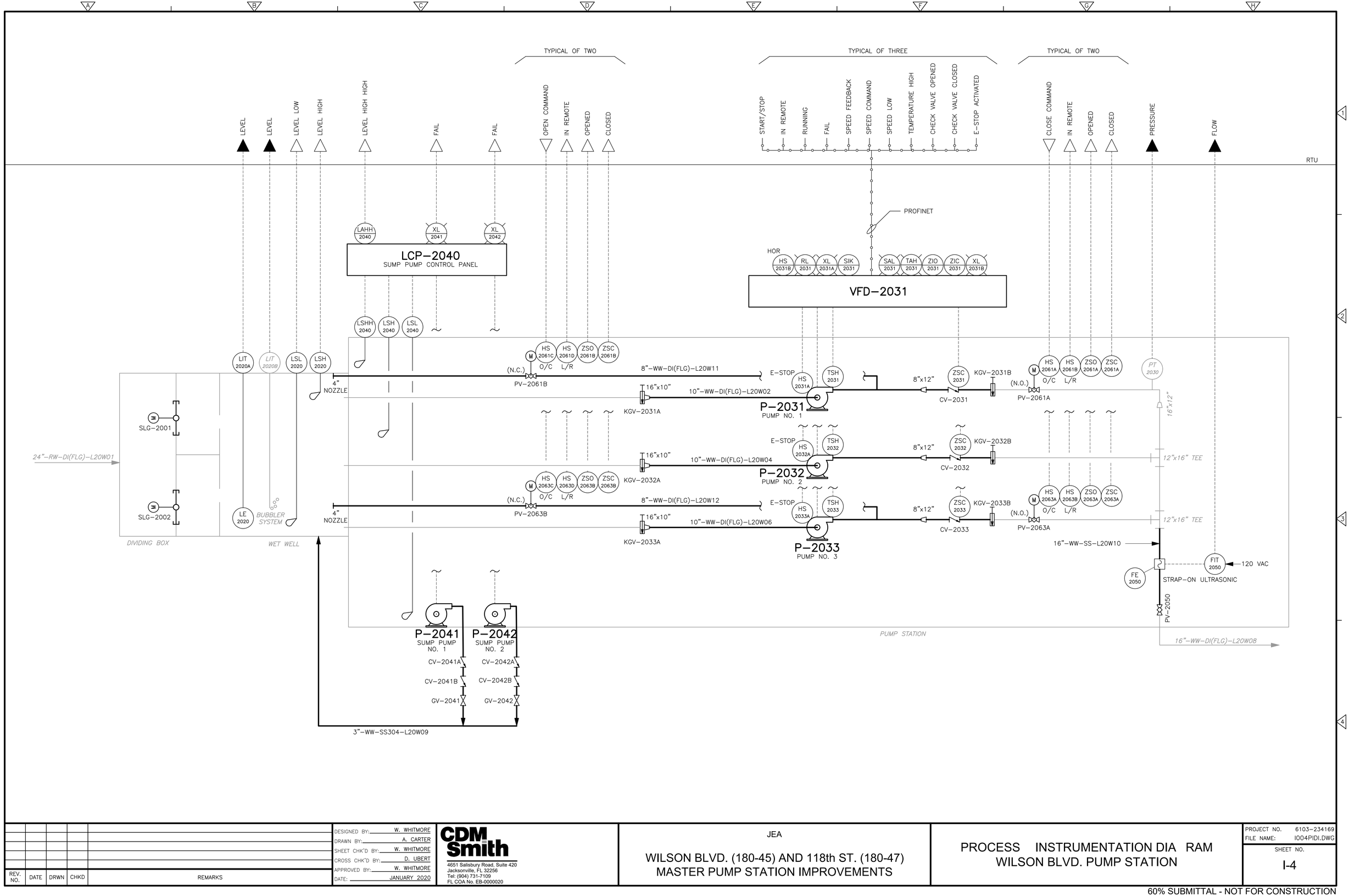


XREFs: [CDMS_2234] Images: []
Last saved by: CHARITYRW Time: 2/13/2020 5:33:14 PM
C:\Users\charityrw\AppData\Local\Autodesk\AutoCAD Plant 3D\CollaborationCache\6103_234169\PID DWG\I004PID.dwg
© 2020 CDM SMITH ALL RIGHTS RESERVED.
REUSE OF DOCUMENTS: THESE DOCUMENTS AND DESIGNS PROVIDED BY PROFESSIONAL SERVICE, INCORPORATED HEREIN, ARE THE PROPERTY OF CDM SMITH AND ARE NOT TO BE USED, IN WHOLE OR PART, FOR ANY OTHER PROJECT WITHOUT THE WRITTEN AUTHORIZATION OF CDM SMITH.

| REV. NO. | DATE | DRWN | CHKD | REMARKS |
|---|---|---|---|---|
| | | | | |

DESIGNED BY: W. WHITMORE
DRAWN BY: A. CARTER
SHEET CHK'D BY: W. WHITMORE
CROSS CHK'D BY: D. UBERT
APPROVED BY: W. WHITMORE
DATE: JANUARY 2020

CDM Smith
4651 Salisbury Road, Suite 420
Jacksonville, FL 32256
Tel: (904) 731-7109
FL COA No. EB-0000020

JEA

WILSON BLVD. (180-45) AND 118th ST. (180-47)
MASTER PUMP STATION IMPROVEMENTS

# PROCESS INSTRUMENTATION DIA RAM
WILSON BLVD. PUMP STATION

PROJECT NO. 6103-234169
FILE NAME: I004PIDI.DWG
SHEET NO. I-4

60% SUBMITTAL - NOT FOR CONSTRUCTION

XREFs: [CDMS_2234] Images: []
Last saved by: CHARITYRW Time: 2/12/2020 4:05:13 PM
C:\Users\charityrw\AppData\Local\Autodesk\AutoCAD Plant 3D\CollaborationCache\6103_234169\PID DWG\I005PIDI.dwg
© 2020 CDM SMITH ALL RIGHTS RESERVED.
REUSE OF DOCUMENTS: THESE DOCUMENTS AND DESIGNS PROVIDED BY PROFESSIONAL SERVICE, INCORPORATED HEREIN, ARE THE PROPERTY OF CDM SMITH AND ARE NOT TO BE USED, IN WHOLE OR PART, FOR ANY OTHER PROJECT WITHOUT THE WRITTEN AUTHORIZATION OF CDM SMITH.

A B C D E F G H

ON UTILITY
ON GENERATOR
MAIN–M1A CLOSED
MAIN–M1A OPENED
TIE T–1 CLOSED
TIE T–1 OPENED
TIE T–2 CLOSED
TIE T–2 OPENED
MAIN–M1B CLOSED
MAIN–M1B OPENED
GENERATOR BATTERY TROUBLE
GENERATOR NOT IN AUTO
GENERATOR RUNNING
GENERATOR LOW COOLANT
GENERATOR TROUBLE ALARM
LEVEL
INTERSTITAL LEAK ALARM
LOW LEVEL ALARM
HIGH LEVEL ALARM
UPS BATTERY OK
UPS ON BATTERY
UPS BATTERY OK
UPS ON BATTERY
ENGINE RUNNING
ENGINE IN AUTO
COMMON ALARM
LOW COOLANT TEMPERATURE
LOW COOLANT LEVEL
HIGH COOLANT TEMPERATURE
LOW OIL PRESSURE
LOW OIL LEVEL
LOW BATTERY ALARM
LOW BATTERY WARNING
BATTERY CHARGER FAIL
PUMP REMOTE START
PUMP REMOTE ALARM ACKNOWLEDGE
FUEL TANK LEVEL

RTU

PROFINET

PROFINET

UPS–2235
UNINTERRUPTIBLE POWER SUPPLY

ATS–2200
AUTOMATIC TRANSFER SWITCH

MCC–2200
MOTOR CONTROL CENTER

GEN–2210
GENERATOR

LLDP–2220
GENERATOR FUEL TANK LEAK/LEVEL DETECTION PANEL

UPS–2230
UNINTERRUPTIBLE POWER SUPPLY
NETWORK RACK

LCP–2240
PONY PUMP DISTRIBUTED I/O PANEL

1 2 3 4

| REV. NO. | DATE | DRWN | CHKD | REMARKS |
|---|---|---|---|---|
| | | | | |

DESIGNED BY: W. WHITMORE
DRAWN BY: A. CARTER
SHEET CHK'D BY: W. WHITMORE
CROSS CHK'D BY: D. UBERT
APPROVED BY: W. WHITMORE
DATE: JANUARY 2020

CDM Smith
4651 Salisbury Road, Suite 420
Jacksonville, FL 32256
Tel: (904) 731-7109
FL COA No. EB-0000020

JEA

WILSON BLVD. (180-45) AND 118th ST. (180-47)
MASTER PUMP STATION IMPROVEMENTS

# PROCESS INSTRUMENTATION DIA RAM
WILSON BLVD. ELECTRICAL E UIPMENT

PROJECT NO. 6103–234169
FILE NAME: I005PIDI.DWG

SHEET NO.
I-5

60% SUBMITTAL - NOT FOR CONSTRUCTION

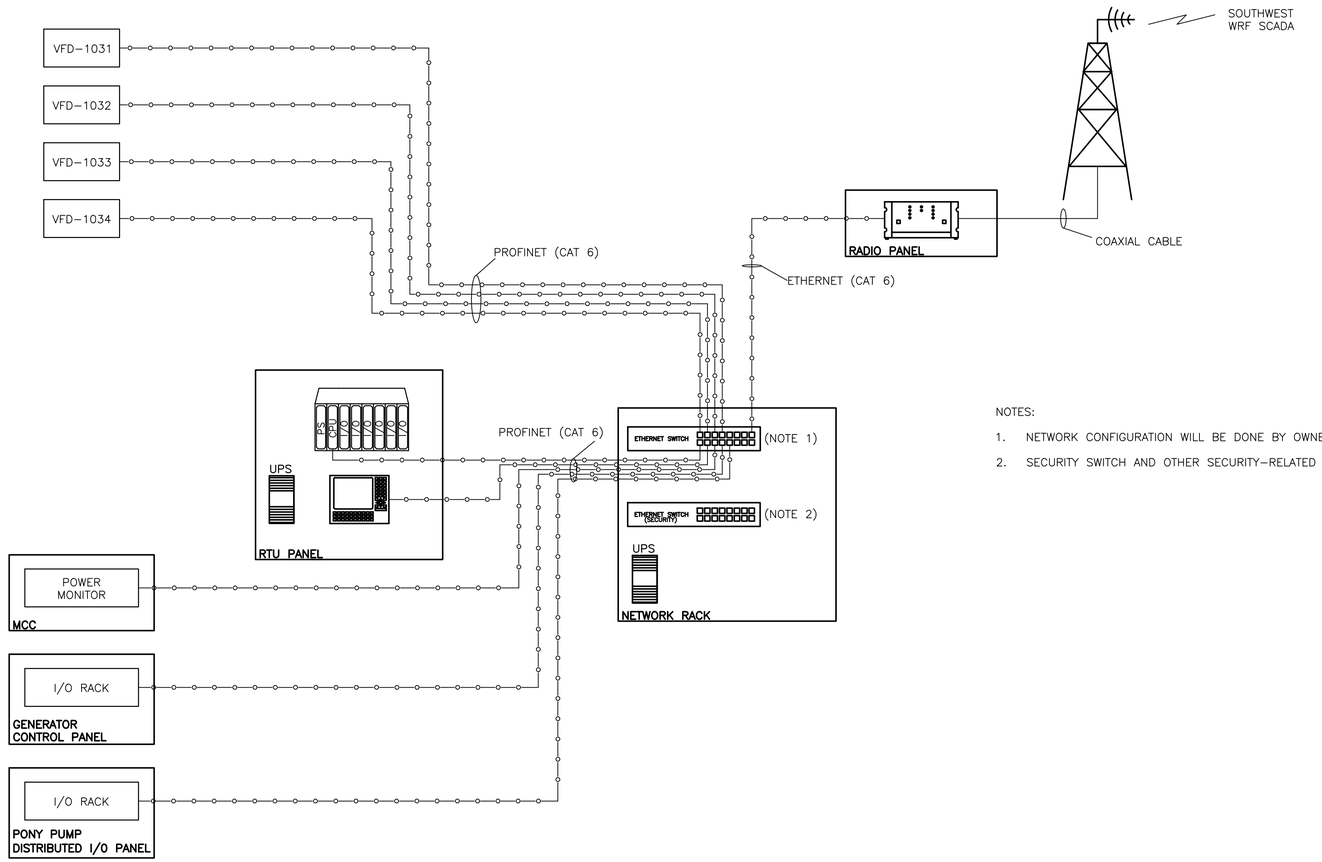


NOTES:

1. NETWORK CONFIGURATION WILL BE DONE BY OWNER IN CONJUNCTION WITH PROGRAMMING SERVICES. REFER TO SPECIFICATIONS SECTION 406100.
2. SECURITY SWITCH AND OTHER SECURITY–RELATED EQUIPMENT WILL BE FURNISHED AND INSTALLED BY OWNER.

| REV. NO. | DATE | DRWN | CHKD | REMARKS |
|---|---|---|---|---|
| | | | | |

DESIGNED BY: W. WHITMORE
DRAWN BY: J. LOWE
SHEET CHK'D BY: W. WHITMORE
CROSS CHK'D BY: D. UBERT
APPROVED BY: W. WHITMORE
DATE: JANUARY 2020

CDM Smith
4651 Salisbury Road, Suite 420
Jacksonville, FL 32256
Tel: (904) 731-7109
FL COA No. EB-0000020

JEA

WILSON BLVD. (180-45) AND 118th ST. (180-47)
MASTER PUMP STATION IMPROVEMENTS

CONTROL BLOCK DIAGRAM
118TH STREET

PROJECT NO. 6103–234169
FILE NAME: I006PIDT.DWG

SHEET NO.
I-6

60% SUBMITTAL - NOT FOR CONSTRUCTION

XREFs: [CDMS_2234] Images: []
Last saved by: CHARITYRW Time: 2/19/2020 2:49:13 PM
C:\Users\charityrw\AppData\Local\Autodesk\AutoCAD Plant 3D\CollaborationCache\6103_234169\PID DWG\I006PIDT.dwg
© 2020 CDM SMITH ALL RIGHTS RESERVED.
REUSE OF DOCUMENTS: THESE DOCUMENTS AND DESIGNS PROVIDED BY PROFESSIONAL SERVICE, INCORPORATED HEREIN, ARE THE PROPERTY OF CDM SMITH AND ARE NOT TO BE USED, IN WHOLE OR PART, FOR ANY OTHER PROJECT WITHOUT THE WRITTEN AUTHORIZATION OF CDM SMITH.

XREFs: [CDMS_2234] Images: []
Last saved by: LOWEJB Time: 1/30/2020 1:54:02 PM
C:\Users\lowejb\AppData\Local\Autodesk\AutoCAD Plant 3D\CollaborationCache\6103_234169\PID DWG\I007PIDI.dwg
© 2020 CDM SMITH ALL RIGHTS RESERVED.
REUSE OF DOCUMENTS: THESE DOCUMENTS AND DESIGNS PROVIDED BY PROFESSIONAL SERVICE, INCORPORATED HEREIN, ARE THE PROPERTY OF CDM SMITH AND ARE NOT TO BE USED, IN WHOLE OR PART, FOR ANY OTHER PROJECT WITHOUT THE WRITTEN AUTHORIZATION OF CDM SMITH.

TYPICAL OF TWO

TYPICAL OF FOUR

LEVEL
LEVEL
LEVEL LOW
LEVEL HIGH
LEVEL
LEVEL
LEVEL LOW
LEVEL HIGH
LEVEL HIGH HIGH
FAIL
FAIL
OPEN COMMAND
IN REMOTE
OPENED
CLOSED
START/STOP
IN REMOTE
RUNNING
FAIL
SPEED FEEDBACK
SPEED COMMAND
SPEED LOW
TEMPERATURE HIGH
CHECK VALVE OPENED
CHECK VALVE CLOSED
E-STOP ACTIVATED
PRESSURE
FLOW

RTU

PROFINET

HOR

LAHH 1040 | XL 1041 | XL 1042

**LCP–1040**
SUMP PUMP CONTROL PANEL

HS 1031B | RL 1031 | XL 1031A | SIK 1031 | SAL 1031 | TAH 1031 | ZIO 1031 | ZIC 1031 | XL 1031B

**VFD–1031**

LSHH 1040 | LSH 1040 | LSL 1040

LIT 1021A | *LIT 1021B* | LSL 1021 | LSH 1021

**BS–1011**
MANUAL BARSCREEN

48"x48" SLG–1001

SLG–1021

SLG–1010

LE 1021 | *BUBBLER SYSTEM*

54"–RW–RCP–L10W01

*BS–1012*
*MANUAL BARSCREEN*

48"x48" SLG–1002

*DIVIDING BOX*

WET WELL 1

SLG–1022

SLG–1023

LIT 1022A | *LIT 1022B* | LSL 1022 | LSH 1022

LE 1022 | *BUBBLER SYSTEM*

WET WELL 2

8"–WW–DI(FLG)–L10W12

4" NOZZLE

24"x16" 16"–WW–DI(FLG)–L10W02

KGV–1031

HS 1061A | HS 1061B | ZSO 1061 | ZSC 1061

(N.C.) O/C L/R

PV–1061

E–STOP

HS 1031A | TSH 1031

12"x8" 12"x20"

ZSC 1031

CV–1031

20"–WW–DI(FLG)–L10W03 20"x30"

PV–1031

36"x30"

**P–1031**
PUMP NO. 1

24"x16" 16"–WW–DI(FLG)–L10W04

KGV–1032

E–STOP

HS 1032A | TSH 1032

12"x20"

ZSC 1032

CV–1032

20"–WW–DI(FLG)–L10W05 20"x30"

PV–1032

30"x36" TEE

**P–1032**
PUMP NO. 2

42"x36"

24"x16" 16"–WW–DI(FLG)–L10W06

KGV–1033

E–STOP

HS 1033A | TSH 1033

12"x20"

ZSC 1033

CV–1033

20"–WW–DI(FLG)–L10W07 20"x30"

PV–1033

30"x42" TEE

**P–1033**
PUMP NO. 3

HS 1064A | HS 1064B | ZSO 1064 | ZSC 1064

(N.C.) O/C L/R

PV–1064

8"–WW–DI(FLG)–L10W13

4" NOZZLE

24"x16" 16"–WW–DI(FLG)–L10W08

KGV–1034

E–STOP

HS 1034A | TSH 1034

12"x8" 12"x20"

ZSC 1034

CV–1034

20"–WW–DI(FLG)–L10W09 20"x30"

PV–1034

30"x42" TEE

**P–1034**
PUMP NO. 4

PT 1030

FE 1050 | FIT 1050

120 VAC

STRAP–ON ULTRASONIC

RSW–GV–1050

42"–WW–DI(FLG)–L10W10

I–4
FOUL AIR TO ODOR CONTROL SYSYTEM

*PUMP STATION*

**P–1041**
SUMP PUMP NO. 1

CV–1041A

CV–1041B

GV–1041

**P–1042**
SUMP PUMP NO. 2

CV–1042A

CV–1042B

GV–1042

3"–WW–SS304–L10W11

| REV. NO. | DATE | DRWN | CHKD | REMARKS |
|---|---|---|---|---|

DESIGNED BY: W. WHITMORE
DRAWN BY: A. CARTER
SHEET CHK'D BY: W. WHITMORE
CROSS CHK'D BY: D. UBERT
APPROVED BY: W. WHITMORE
DATE: JANUARY 2020

CDM Smith
4651 Salisbury Road, Suite 420
Jacksonville, FL 32256
Tel: (904) 731-7109
FL COA No. EB-0000020

JEA

WILSON BLVD. (180-45) AND 118th ST. (180-47)
MASTER PUMP STATION IMPROVEMENTS

PROCESS & INSTRUMENTATION DIAGRAM
118TH STREET PUMP STATION

PROJECT NO. 6103–234169
FILE NAME: I007PIDI.DWG

SHEET NO.
I-7

60% SUBMITTAL - NOT FOR CONSTRUCTION

THESE DRAWINGS AND SPECIFICATIONS ARE THE PROPERTY OF CDM SMITH AND ARE NOT TO BE USED, IN WHOLE OR PART, FOR ANY OTHER PROJECT WITHOUT THE WRITTEN AUTHORIZATION OF CDM SMITH.

XREFs: [CDMS_2234] Images: []
Last saved by: CHARITYFW Time: 2/12/2020 4:11:05 PM
C:\Users\charityfw\AppData\Local\Autodesk\AutoCAD Plant 3D\CollaborationCache\6103_234169\PID DWG\I008PIDI.dwg

©2020 CDM SMITH ALL RIGHTS RESERVED.
REUSE OF DOCUMENTS: THESE DOCUMENTS AND DESIGNS PROVIDED BY PROFESSIONAL SERVICE, INCORPORATED HEREIN, ARE THE PROPERTY OF CDM SMITH.

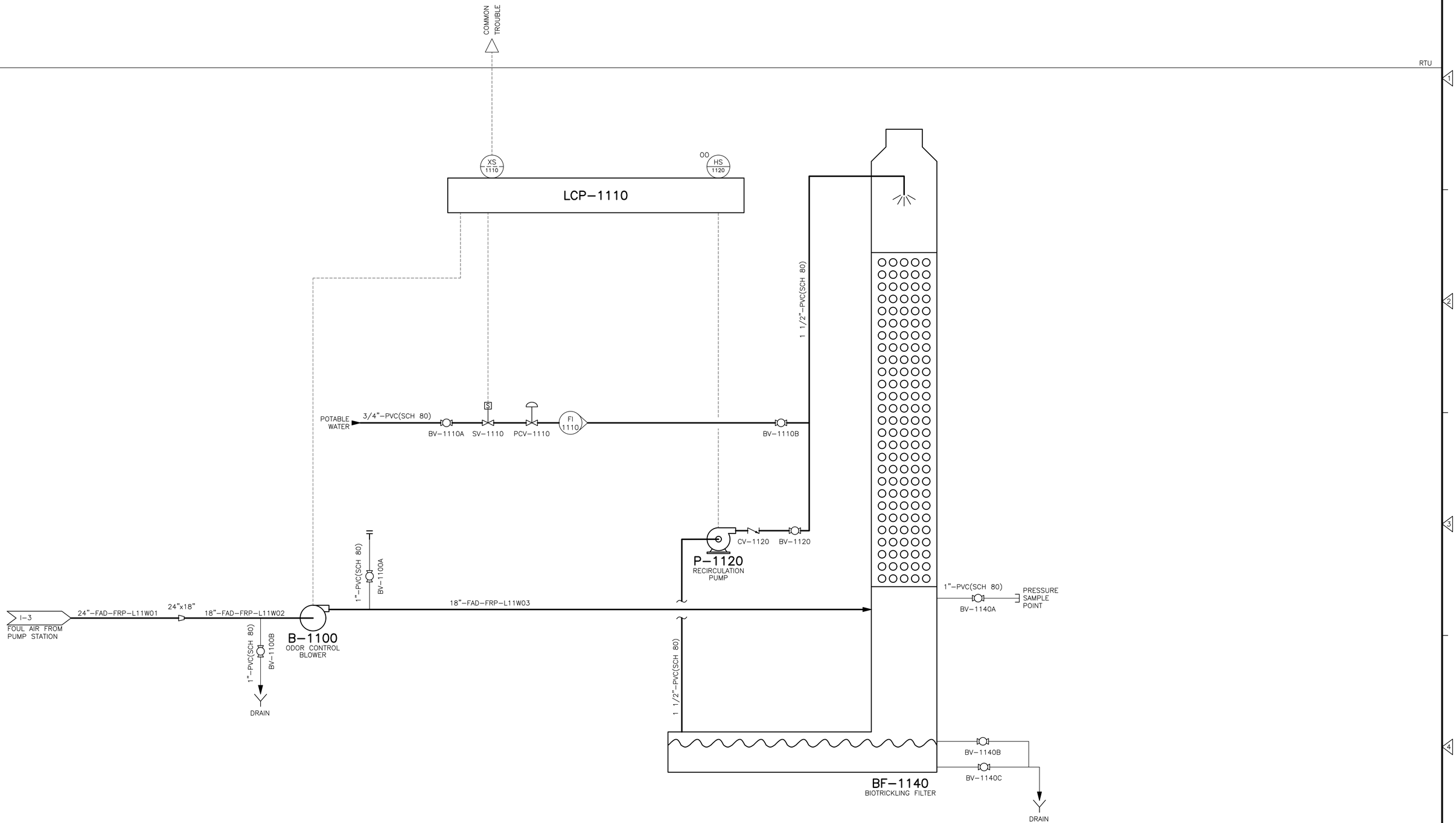


| REV. NO. | DATE | DRWN | CHKD | REMARKS |
|---|---|---|---|---|

DESIGNED BY: W. WHITMORE
DRAWN BY: A. CARTER
SHEET CHK'D BY: W. WHITMORE
CROSS CHK'D BY: D. UBERT
APPROVED BY: W. WHITMORE
DATE: JANUARY 2020

CDM Smith
4651 Salisbury Road, Suite 420
Jacksonville, FL 32256
Tel: (904) 731-7109
FL COA No. EB-0000020

JEA

WILSON BLVD. (180-45) AND 118th ST. (180-47)
MASTER PUMP STATION IMPROVEMENTS

# PROCESS INSTRUMENTATION DIA RAM
# 118TH STREET ODOR CONTROL SYSTEM

PROJECT NO. 6103–234169
FILE NAME: I008PIDI.DWG
SHEET NO. I-8

60% SUBMITTAL - NOT FOR CONSTRUCTION

XREFs: [CDMS_2234] Images: []
Last saved by: CHARITYRW Time: 2/12/2020 4:11:54 PM
C:\Users\charityrw\AppData\Local\Autodesk\AutoCAD Plant 3D\CollaborationCache\6103_234169\PID DWG\I009PIDI.dwg
© 2020 CDM SMITH ALL RIGHTS RESERVED.
REUSE OF DOCUMENTS: THESE DOCUMENTS AND DESIGNS PROVIDED BY PROFESSIONAL SERVICE, INCORPORATED HEREIN, ARE THE PROPERTY OF CDM SMITH AND ARE NOT TO BE USED, IN WHOLE OR PART, FOR ANY OTHER PROJECT WITHOUT THE WRITTEN AUTHORIZATION OF CDM SMITH.

ON UTILITY

ON GENERATOR

GENERATOR BATTERY TROUBLE
GENERATOR NOT IN AUTO
GENERATOR RUNNING
GENERATOR LOW COOLANT
GENERATOR TROUBLE ALARM

LEVEL
INTERSTITAL LEAK ALARM
LOW LEVEL ALARM
HIGH LEVEL ALARM

UPS BATTERY OK
UPS ON BATTERY

UPS BATTERY OK
UPS ON BATTERY

UPS–1235
UNINTERRUPTIBLE POWER SUPPLY

ENGINE RUNNING
ENGINE IN AUTO
COMMON ALARM
LOW COOLANT TEMPERATURE
LOW COOLANT LEVEL
HIGH COOLANT TEMPERATURE
LOW OIL PRESSURE
LOW OIL LEVEL
LOW BATTERY ALARM
LOW BATTERY WARNING
BATTERY CHARGER FAIL
PUMP REMOTE START
PUMP REMOTE ALARM ACKNOWLEDGE
FUEL TANK LEVEL

RTU

PROFINET

PROFINET

MCC–1200
MOTOR CONTROL CENTER

GEN–1210
GENERATOR

LLDP–1220
GENERATOR FUEL TANK LEAK/LEVEL DETECTION PANEL

UPS–1230
UNINTERRUPTIBLE POWER SUPPLY
NETWORK RACK

LCP–1240
PONY PUMP DISTRIBUTED I/O PANEL

| REV. NO. | DATE | DRWN | CHKD | REMARKS |
|---|---|---|---|---|
| | | | | |

DESIGNED BY: W. WHITMORE
DRAWN BY: A. CARTER
SHEET CHK'D BY: W. WHITMORE
CROSS CHK'D BY: D. UBERT
APPROVED BY: W. WHITMORE
DATE: JANUARY 2020

CDM Smith
4651 Salisbury Road, Suite 420
Jacksonville, FL 32256
Tel: (904) 731-7109
FL COA No. EB-0000020

JEA

WILSON BLVD. (180-45) AND 118th ST. (180-47)
MASTER PUMP STATION IMPROVEMENTS

PROCESS INSTRUMENTATION DIA RAM
118TH STREET ELECTRICAL E UIPMENT

PROJECT NO. 6103–234169
FILE NAME: I009PIDI.DWG

SHEET NO.
I-9

60% SUBMITTAL - NOT FOR CONSTRUCTION

© 2020 CDM SMITH. ALL RIGHTS RESERVED.
REUSE OF DOCUMENTS: THESE DOCUMENTS AND DESIGNS PROVIDED BY PROFESSIONAL SERVICE, INCORPORATED HEREIN, ARE THE PROPERTY OF CDM SMITH AND ARE NOT TO BE USED, IN WHOLE OR PART, FOR ANY OTHER PROJECT WITHOUT THE WRITTEN AUTHORIZATION OF CDM SMITH.

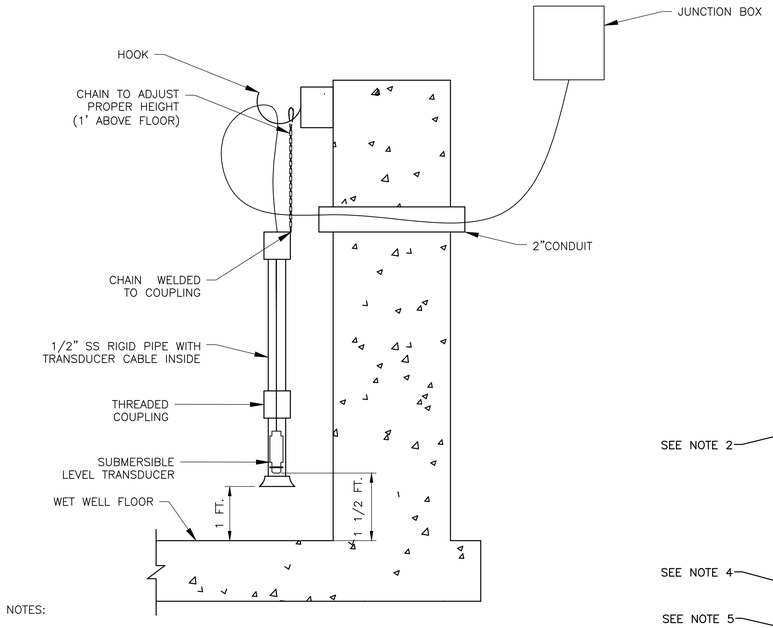


NOTES:

1. PROVIDE 15" X 15" MINIMUM TERMINATION PANEL. PROVIDE J-HOOK INSIDE PANEL TO COIL EXTRA CABLE. PROVIDE TERMINATION BLOCKS. ALL CABLES AND WIRES SHALL BE LABELED.

**SUBMERSIBLE LEVEL SENSOR**

DETAIL A
NTS

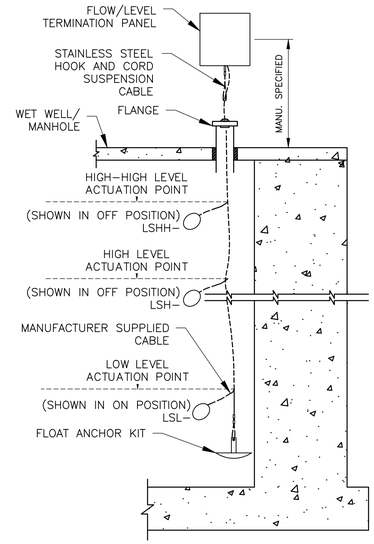


NOTES:

1. PROVIDE 15" X 15" MINIMUM SIZED FLOAT TERMINATION PANEL. PROVIDE J-HOOK INSIDE PANEL TO COIL EXTRA CABLE. PROVIDE TERMINATION BLOCKS. ALL CABLES AND WIRES SHALL BE LABELED.

**FLOAT SWITCH (CABLE SUSPENSION)**

DETAIL B
NTS

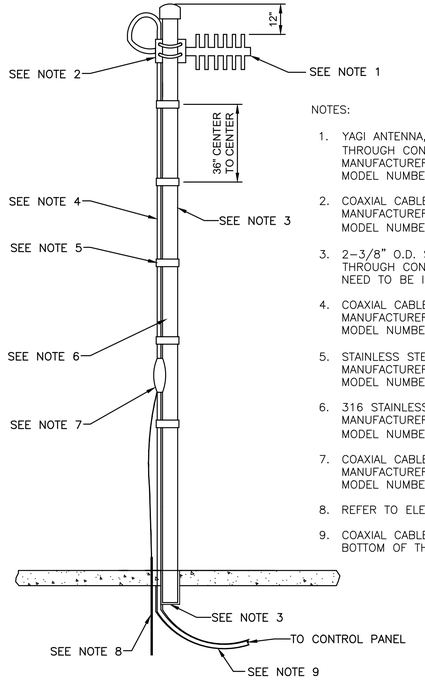


NOTES:

1. YAGI ANTENNA, COMES WITH MOUNTING HARDWARE (MAST SHALL BE SLEEVED THROUGH CONCRETE TO ALLOW ROTATION). DO NOT USE WOOD POLE MOUNT.
   MANUFACTURER: SCALA
   MODEL NUMBER: TY-900
2. COAXIAL CABLE CONNECTOR
   MANUFACTURER: WIRELESS SOLUTIONS
   MODEL NUMBER: NM50V-1/2
3. 2-3/8" O.D. SCHEDULE 40 ALUMINUM 20' POLE. POLE SHALL BE SLEEVED THROUGH CONCRETE TO ALLOW FOR ROTATION. ALUMINUM AND CONCRETE NEED TO BE ISOLATED TO PREVENT CORROSION.
4. COAXIAL CABLE SHALL BE ONE CONTINUOUS PIECE
   MANUFACTURER: ANDREW
   MODEL NUMBER: LDF4-50A
5. STAINLESS STEEL STRAPS 3' O/C
   MANUFACTURER: WIRELESS SOLUTIONS
   MODEL NUMBER: RM-A300
6. 316 STAINLESS STEEL U-BOLTS
   MANUFACTURER: ANY DOMESTIC BRAND
   MODEL NUMBER: N/A
7. COAXIAL CABLE GROUNDING KIT
   MANUFACTURER: TESSCO
   MODEL NUMBER: 41669
8. REFER TO ELECTRICAL FOR GROUNDING DETAILS.
9. COAXIAL CABLE SHALL BE RUN INTO AN UNDERGROUND CONDUIT AT THE BOTTOM OF THE POLE.

**FLOAT SWITCH (CABLE SUSPENSION)**

DETAIL C
NTS

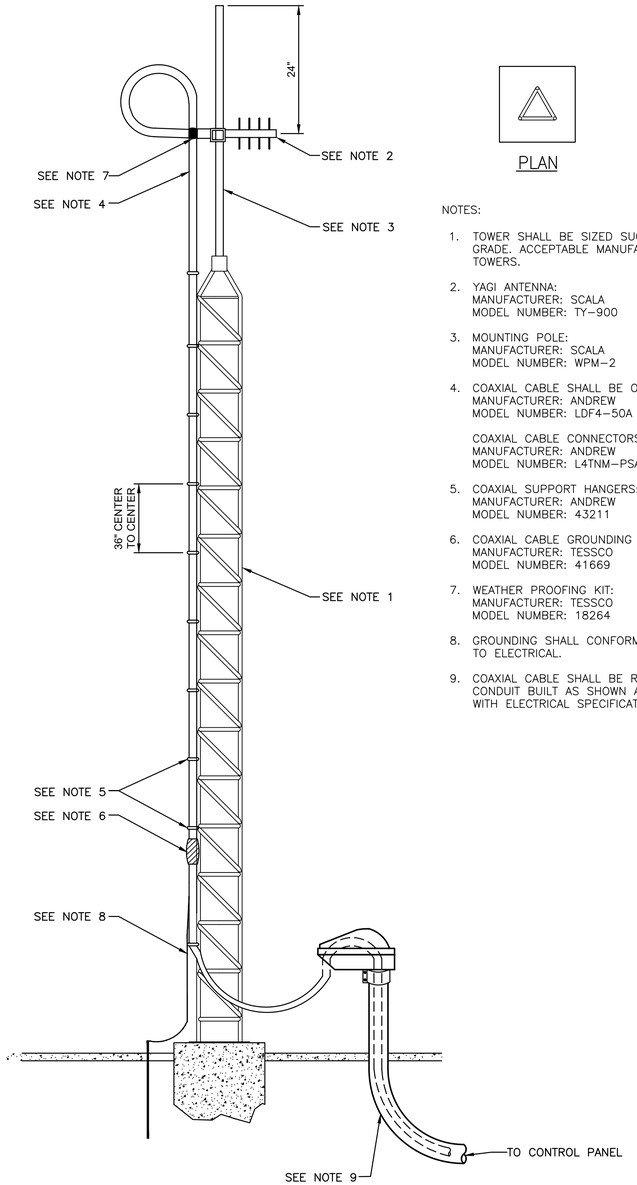


PLAN

NOTES:

1. TOWER SHALL BE SIZED SUCH THAT THE ANTENNA IS MOUNTED 20' ABOVE GRADE. ACCEPTABLE MANUFACTURERS OF TOWERS ARE ROHN OR UNIVERSAL TOWERS.
2. YAGI ANTENNA:
   MANUFACTURER: SCALA
   MODEL NUMBER: TY-900
3. MOUNTING POLE:
   MANUFACTURER: SCALA
   MODEL NUMBER: WPM-2
4. COAXIAL CABLE SHALL BE ONE CONTINUOUS PIECE
   MANUFACTURER: ANDREW
   MODEL NUMBER: LDF4-50A

   COAXIAL CABLE CONNECTORS:
   MANUFACTURER: ANDREW
   MODEL NUMBER: L4TNM-PSA
5. COAXIAL SUPPORT HANGERS:
   MANUFACTURER: ANDREW
   MODEL NUMBER: 43211
6. COAXIAL CABLE GROUNDING KIT:
   MANUFACTURER: TESSCO
   MODEL NUMBER: 41669
7. WEATHER PROOFING KIT:
   MANUFACTURER: TESSCO
   MODEL NUMBER: 18264
8. GROUNDING SHALL CONFORM TO THE REQUIREMENTS OF NFPA 780. REFER TO ELECTRICAL.
9. COAXIAL CABLE SHALL BE RUN INTO A WEATHERHEAD AND UNDERGROUND CONDUIT BUILT AS SHOWN AND SEALED AGAINST MOISTURE IN CONFORMANCE WITH ELECTRICAL SPECIFICATIONS.

**SCADA INSTALLATION DETAIL**
**(FOR POLE HEIGHTS 20 FEET AND ABOVE – NOT TO SCALE)**

DETAIL D
NTS

| REV. NO. | DATE | DRWN | CHKD | REMARKS |
|---|---|---|---|---|
| | | | | |

DESIGNED BY: W. WHITMORE
DRAWN BY: R. CHARITY
SHEET CHK'D BY: W. WHITMORE
CROSS CHK'D BY: D. UBERT
APPROVED BY: W. WHITMORE
DATE: JANUARY 2020

CDM Smith
4651 Salisbury Road, Suite 420
Jacksonville, FL 32256
Tel: (904) 731-7109
FL COA No. EB-0000020

JEA

WILSON BLVD. (180-45) AND 118th ST. (180-47)
MASTER PUMP STATION IMPROVEMENTS

INSTRUMENT INSTALLATION DETAILS

PROJECT NO. 6103-234169
FILE NAME: I01OPIDT.DWG
SHEET NO.
I-10

60% SUBMITTAL - NOT FOR CONSTRUCTION

NOTES:

1. PROTECT CONNECTION WITH COAX SEALING TAPE.
2. YAGI ANTENNA AND POLE ASSEMBLY SHALL BE 20 FEET NOMINAL HEIGHT.
3. BOND ANTENNA POLE TO BUILDING GROUND SYSTEM PER NEC
4. GROUND WIRE TYPE (10 AWG OR LARGER)
5. HELIAX RF CABLE GROUNDING KIT
6. INTAKE PLENUM WALL
7. PROVIDE SUPERFLEX COAXIAL CABLE FOR FINAL CONNECTION
8. 316 SS WALL MOUNT CLAMPS W/ 316 SS HARDWARE CELWAVE PD10064 OR EQUIV. MINUMUM 24" SPACING BETWEEN WALL MOUNTS, FOR A TOTAL OF 3 CONNECTIONS.
9. SECURE CABLE TO MAST PIPE WITH 316 SS CLAMPS. MAXIMUM 3 FT. BETWEEN CLAMPS.
10. TO GE MDS SD9 RADIO LOCATED IN MASTER PUMP STATION RTU CONTROL PANEL
11. PROVIDE ENOUGH BENDING SPACE TO ALLOW FLEXING OF HELIAX CABLE
12. 4" MAXIMUM PER MANUFACTURER REQUIREMENT.
13. YAGI ANTENNA
14. TOWER GROUNDING SYSTEM. 10 FOOT COPPER CLAD MINIMUM.
15. LIGHTNING ROD (UP TO 5 FT.)
16. PIPE CAP
17. STANDARD ANTENNA PIPE MOUNTS, VERTICAL POLARIZED
18. 2" MIN SCHEDULE 40 ALUMINUM PIPE
19. 316 SS PLATE TO MATCH SIZE AND THICKNESS OF ASSEMBLY PLATE (SEE NOTE 8) WITH (4) 1/2" DIAMETER 316SS ANCHOR BOLTS WITH MATCHING HARDWARE.
20. GROUND CLAMP FOR PIPE
21. DRIP LOOP
22. ANCHORAGE SYSTEM SHALL BE INSTALLED AT GROUTED CELL LOCATION. COORDINATE WITH STRUCTURAL DRAWINGS.

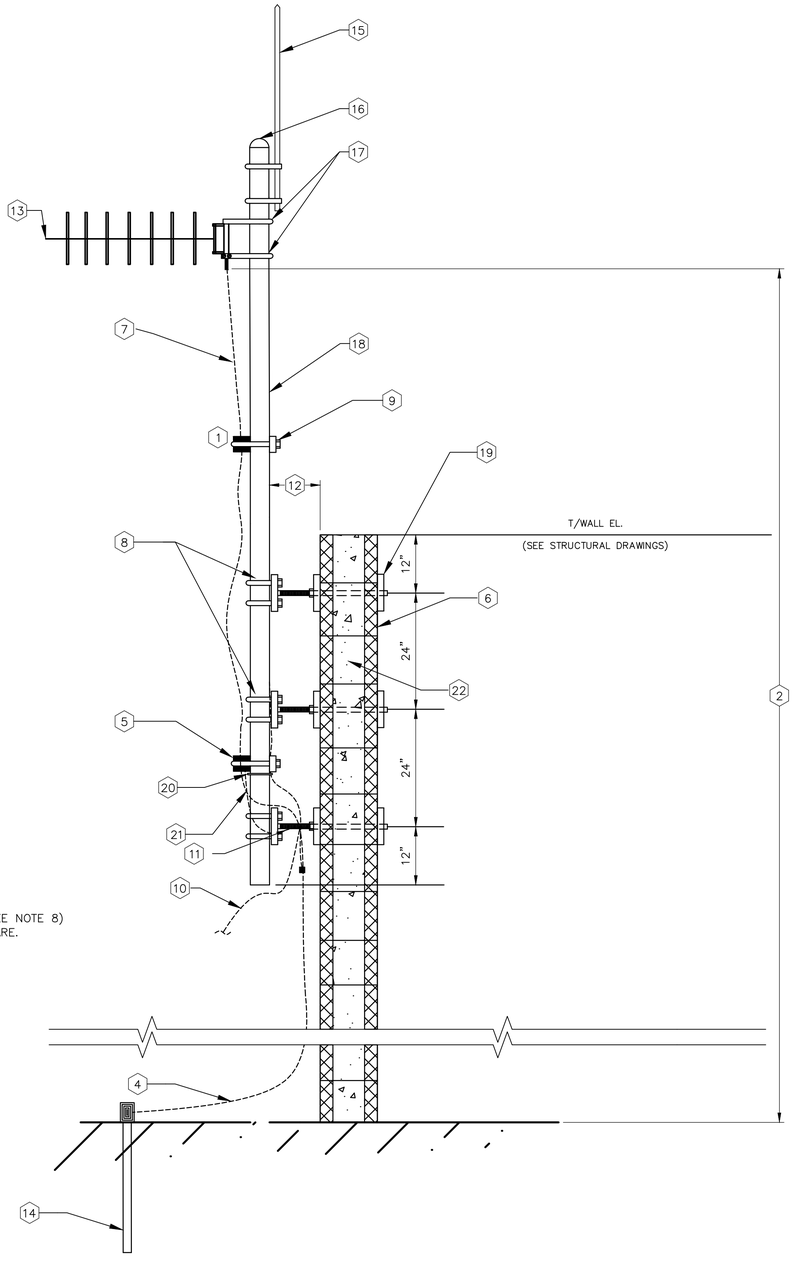


**POLE MOUNTBUILDING MOUNTED YAGI ANTENNA DETAILED ANTENNA**

DETAIL E
NTS –

© 2020 CDM SMITH ALL RIGHTS RESERVED.
REUSE OF DOCUMENTS: THESE DOCUMENTS AND DESIGNS PROVIDED BY PROFESSIONAL SERVICE, INCORPORATED HEREIN, ARE THE PROPERTY OF CDM SMITH AND ARE NOT TO BE USED, IN WHOLE OR PART, FOR ANY OTHER PROJECT WITHOUT THE WRITTEN AUTHORIZATION OF CDM SMITH.

| REV. NO. | DATE | DRWN | CHKD | REMARKS |
|---|---|---|---|---|
| | | | | |

DESIGNED BY: W. WHITMORE
DRAWN BY: R. CHARITY
SHEET CHK'D BY: W. WHITMORE
CROSS CHK'D BY: D. UBERT
APPROVED BY: W. WHITMORE
DATE: JANUARY 2020

CDM Smith
4651 Salisbury Road, Suite 420
Jacksonville, FL 32256
Tel: (904) 731-7109
FL COA No. EB-0000020

JEA

WILSON BLVD. (180-45) AND 118th ST. (180-47)
MASTER PUMP STATION IMPROVEMENTS

INSTRUMENT INSTALLATION DETAILS
(SHEET 2 OF 2)

PROJECT NO. 6103-234169
FILE NAME: I011PIDT.DWG
SHEET NO.
I-11

60% SUBMITTAL - NOT FOR CONSTRUCTION