CITY OF JACKSONVILLE NOTES

GENERAL

All construction shall be performed in accordance with the approved plans and comply with all standard city policies and practices. City approval is contingent upon any required state or federal permit approvals such as those from the Department of Environmental Protection or the St. Johns River Water Management District (SJRWMD).

UTILITY WORK

Plan approval through Development Services does not include utilities. Proposed water, sewer or electric construction must be approved separately through the respective utility company. In most cases, this will be:

JEA
JEA Tower - 4th Floor
21 W. Church Street
Jacksonville, FL 32202
http://www.jea.com/business/services/devandbuild/developers.asp

WORK WITHIN THE RIGHT-OF-WAY

CITY: Except for new subdivision infrastructure construction, all work performed within a City of Jacksonville right-of-way or easement requires a Right-of-way Permit. The contractor performing the proposed work must have a current Right-of-way Bond on file with Development Services. Right-of-way Permit applications are processed at:

Development Services Customer Service Counter
Edward Ball Building, 2nd Floor
214 N. Hogan St.
Jacksonville, FL 32202
(904) 255-8572
http://row.jaxdev.info/

STATE: All work performed within a state right-of-way requires a permit from the Florida Department of Transportation (FDOT). It is the developer's responsibility to obtain required FDOT permits or maintenance-of-traffic approvals for work within FDOT right-of-ways. The FDOT regional office can be contacted at (904) 360-5200 Any changes to the approved plans needed for FDOT approval must be submitted to Development Services as revisions.

Adjacent State Roads: _____

RAILROAD: Railroad companies may require special approvals or permits to work within their right-of-ways. It is the developer's responsibility to obtain permission from any railroad right-of-way owner before performing any work within their right-of-way.

STORMWATER

Annual reports in compliance with the SJRWMD stormwater permits are required from the maintenance entity of all stormwater management facilities. Send copies of the reports to:

Engineering and Construction Management
Edward Ball Building, 10th Floor
214 N. Hogan St.
Jacksonville, FL 32202
http://www.coj.net/Departments/Public+Works/Engineering+and+Construction+Management/

The owner of any project one (1) acre or larger is required to provide a Notice of Intent (NOI) in accordance with criteria set forth in the city's NPDES permit within 48 hours of beginning construction. Send NOI and NOI fee to:

Florida Department of Environmental Protection
NPDES Stormwater Notices Center, Mail Station #2510
2600 Blair Stone Road
Tallahassee, Florida 32399-2400
(866) 336-6312
http://www.dep.state.fl.us/water/stormwater/npdes/

The contractor shall contact the Environmental Quality Division, Erosion and Sedimentation Control Section (ESC) to provide verification that applicable stormwater permits have been obtained and to schedule a pre-construction ESC site inspection:

Environmental Quality Division
407 North Laura Street, Third Floor
Jacksonville, FL, 32202
(904) 255-7222

FIRE MARSHALL

Plan review and approval does not relieve the contractor of complying with all applicable State Fire Codes.

Underground mains and hydrants shall be installed, completed, and in service prior to construction work.

Underground contractor shall submit to the Fire Marshall for approval complete specs for all underground pipe and fittings relating to fire protection PRIOR to installation and inspection. Contractor shall include manufacturer's name and pipe ID along with contractor's state license number.

LANDSCAPE

A Site Work Permit is required for this project.

☐ Tree Fund payment is due: _____ inches at $_____ = $_____

☐ Article 25 funds are due: _____ inches at $_____ = $_____

TRAFFIC ENGINEERING

TRAFFIC SIGNS

Metro Name	_____	$55.00	ea.	_____
Standard	_____	$55.00	ea.	_____
Stop/Yield	_____	$55.00	ea.	_____
Design	_____	$55.00		_____
Installation	_____	$55.00	/hr.	_____
		TOTAL		_____

☐ Streetlights Required

NOTE: Traffic sign costs change from time to time. If the costs change after plan approval but prior to payment for installation, the developer must pay the for the signs at the current costs. The above total assumes the subdivision will be platted as one phase. If the development is platted as separate phases, design and installation will be calculated separately for each phase.

No lane closures allowed from 7 a.m. till 9 a.m. and from 4 p.m. till 6 p.m.

CONSTRUCTION DRAWINGS FOR

BOULEVARD FORCE MAIN AND WATER MAIN REPLACEMENT

FROM 7TH STREET WEST TO 16TH STREET WEST

JEA PROJ NO.-FM: 8005479
JEA PROJ NO.-WM: 8004918

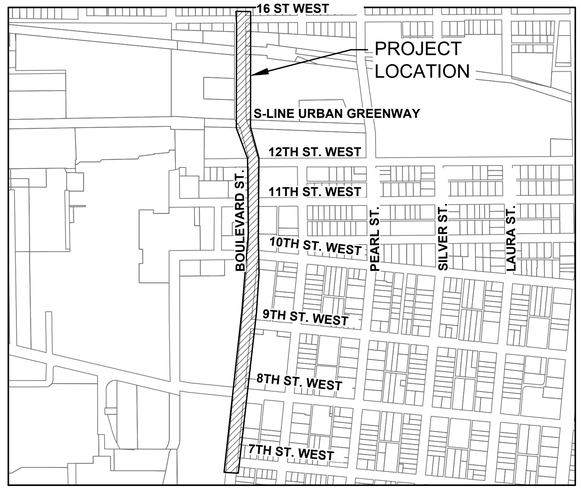

VICINITY MAP

NOT TO SCALE

PREPARED BY:

JonesEdmunds
CERTIFICATE OF AUTHORIZATION #1841
730 NE WALDO ROAD, GAINESVILLE, FLORIDA 32641 / (352) 377-5821
8657 BAYPINE ROAD SUITE 300, JACKSONVILLE, FL 32256 / (904) 744-5401

JONES EDMUNDS PROJECT NO: 09302-055-01

JEA Building Community sm

IFB BID NO.: RPB
BID DUE DATE: M D, 2019 (Tuesday)
TIME OF RECEIPT: 12:00 PM
TIME OF OPENING: 2:00 PM
BID PLACE: 21 W. CHURCH ST.
TOWER LOBBY, SUITE 103
JACKSONVILLE, FL 32202

PLAN APPROVAL

_____ Date _____ Development Services Division (Chief)

_____ Date _____ Review Group (Reviewer)

Plan approval is valid for five years after the initial approval date. Revisions made after the initial approval date do not extend this five-year time frame.

PLAN APPROVAL IS SUBJECT TO THE FOLLOWING NOTES AND CONDITIONS:

GENERAL PROJECT INFORMATION

GENERAL	
City Development Number	4161.296
Concurrency Application Number	
Property Appraiser Number (RE #)	
Zoning Designation	
PUD Ordinance Number	
FIRM – Community – Panel	
Flood Zones (Show in Plans)	
Base Flood Elev. (Show in Plans)	
Vertical Datum Used for Project	NAVD 88
JEA Availability Number	FM 2019-3995, WM 2019-3996
SUBDIVISION	
PSD Number	
City or Private Inspection	
Public or Private Roads	
Subdivision ("911") Disk Provided?	
NON-SUBDIVISION	
North American Industry Classification System (NAICS)	
Impervious Area (Sq. Ft.)	

BID DOCUMENTS
MARCH 30, 2020

JonesEdmunds
CERTIFICATE OF AUTHORIZATION #1841
730 NE WALDO ROAD, GAINESVILLE, FLORIDA 32641 / (352) 377-5821
8657 BAYPINE ROAD SUITE 300, JACKSONVILLE, FL 32256 / (904) 744-5401

NO.	BY	DATE	REVISIONS
6.			
5.			
4.			
3.			
2.			
1.			

BID DATE: M D, 2019 (Tuesday)

DESIGNER: KFRASER
DRAWN BY: RWADE
DATE: MARCH 30, 2020
CHECKED BY: HBRIDGES
DATE: MARCH 30, 2020

DESIGN ENGINEER
KENNETH A. FRASER, PE
FLORIDA REGISTRATION NO.
57452

JEA Building Community sm

BOULEVARD FORCE MAIN AND WATER MAIN REPLACEMENT
COVER SHEET

PROJ TITLE: BOULEVARD FORCE MAIN AND WATER MAIN REPLACEMENT

JEA PROJ NO.:

IFB BID NO.: RPB

PROJ. NO. 09302-055-01
DATE: MARCH 30, 2020
SCALE: NONE

NO. SHEETS 35
SHEET NO. 1
DRAWING NO. G1

Xrefs Attached= XR055-G-TB [Y:\09302-JEA\Projects\055-01 BOULEVARD FM & WM REPLACEMENT\CAD\Dwgs\Xref\general\XR055-G-TB.dwg]
XR055-C-Survey [Y:\09302-JEA\Projects\055-01 BOULEVARD FM & WM REPLACEMENT\CAD\Dwgs\Xref\civil\XR055-C-Survey.dwg]
XR055-C-PARCELS [Y:\09302-jea\Projects\055-01 boulevard fm & wm replacement\CAD\Dwgs\Xref\civil\XR055-C-PARCELS.dwg]
Y:\09302-jea\Projects\055-01 boulevard fm & wm replacement\CAD\Dwgs\General\0930205501-G01.dwg Current Layout Tab = G1 Fri Mar 27, 2020 - 15:53

NOT APPLICABLE	APPLICABLE	

SURVEY AND LOCATE DATA:

NOT APPLICABLE	APPLICABLE	
☒	☐	1. ALL ELEVATIONS ARE BASED ON U.S.C.&G.S. DATUM AND SHOWN IN FEET.
☐	☒	2. ELEVATIONS ARE BASED ON N.A.V.D. 1988.
☐	☒	3. LOCATION OF EXISTING UTILITIES OBTAINED BY SOFT DIG LOCATES WHERE SHOWN ON PLANS, OR INCLUDED WITH BID SPECS.
☐	☒	4. EXISTING WATER AND SEWER LINES ARE SHOWN AS PER FIELD LOCATES AND SUBDIVISION AS-BUILT PLANS.
☒	☐	5. UNDERGROUND UTILITIES WERE LOCATED UTILIZING GROUND PENETRATING RADAR (GPR) AND A DIGITAL LOCATOR. CONTRACTOR SHALL BE AWARE THAT IN SOME CASES UTILITIES HAVE BEEN LOCATED, AND SURVEY HAS BEEN COMPLETED ONLY ON ONE SIDE OF THE ROAD.
☐	☒	6. ALL PIPE LENGTHS SHOWN ON PLAN AND PROFILES ARE FROM CENTER TO CENTER OF MANHOLES, CATCH BASINS, INLETS ETC. OR ALONG THE CENTER LINE OF FORCE MAINS AND WATER MAINS.
☒	☐	7. INVERT ELEVATIONS SHOWN ON DRAWINGS REFER TO THE CENTERLINE OF MANHOLES, UNLESS OTHERWISE INDICATED.
☐	☒	8. THE LOCATION OF ALL EXISTING SEWER AND WATER SERVICE LINES MAY NOT BE INDICATED ON THESE PLANS. THE LOCATION OF NEW SERVICES SHALL BE VERIFIED IN THE FIELD.
☐	☒	9. SEE DRAWING NO. G4 FOR SURVEY NOTES.

PERMIT REQUIREMENTS (NOT ALL INCLUSIVE):

NOT APPLICABLE	APPLICABLE	
☐	☒	1. CONTRACTOR TO OBTAIN ALL REQUIRED RIGHT-OF-WAY PERMITS.
☐	☒	2. CONTRACTOR SHALL NOT OPEN CUT STREETS IN THE PROJECT AREA UNLESS SPECIFICALLY SHOWN ON PLANS
☐	☒	3. THE CONTRACTOR IS RESPONSIBLE FOR OBTAINING A CONSUMPTIVE USE PERMIT (C.U.P.) THROUGH THE ST. JOHNS WATER MANAGEMENT DISTRICT SHOULD DEWATERING ACTIVITIES BE REQUIRED.
☐	☒	4. THE DEPARTMENT OF TRANSPORTATION, RAILROAD COMPANIES AND C.O.J. ARE TO BE NOTIFIED IN ADVANCE OF CONSTRUCTION PER THEIR RESPECTIVE PERMIT CONDITIONS.
☐	☒	5. ALL WORK SHALL BE IN ACCORDANCE WITH BID DOCUMENTS, JEA WATER AND SEWER STANDARDS, DETAILS AND MATERIALS MANUAL, REV. 4/01. AND CITY OF JACKSONVILLE STANDARD SPECIFICATIONS AND DETAILS AND ALL APPLICABLE STATE AND LOCAL REGULATIONS.
☐	☒	6. IF SOLVENT CONTAMINATION IS FOUND IN THE PIPE TRENCH, WORK SHALL BE STOPPED AND THE PROPER AUTHORITIES NOTIFIED. WITH APPROVAL OF THE PERMITTING AGENCY, DUCTILE IRON PIPE, FITTINGS AND SOLVENT RESISTANT GASKET MATERIAL SHALL BE USED IN THE CONTAMINATED AREA. THE DUCTILE IRON PIPE SHALL EXTEND AT LEAST 100 FEET BEYOND ANY SOLVENT NOTED.
☐	☒	7. THE CONTRACTOR SHALL NOTIFY APPLICABLE UTILITY CONTACT PERSONNEL NOT LESS THAN ONE WEEK PRIOR TO CONSTRUCTION OF FACILITIES IN THEIR RESPECTIVE AREAS.
☐	☒	8. TREE PROTECTION SHALL BE IN ACCORDANCE WITH JACKSONVILLE ORDINANCE CODE 656 AND/OR AS DETAILED ON SPECIFIC PLAN SHEETS. NO TRIMMING OF OVERHANGING TREE LIMBS WILL BE ALLOWED. USE SMALLER EQUIPMENT IF NECESSARY.
☐	☒	9. THE CONTRACTOR SHALL LOCATE THE DRAINAGE INLET STRUCTURES IN THE PROJECT AREA AND ERECT SEDIMENTATION CONTROL DEVICES AS NECESSARY PER THE CITY OF JACKSONVILLE STORMWATER POLLUTION PREVENTION PLAN.
☐	☒	10. CONTRACTOR TO COORDINATE WORK WITH OTHER UTILITIES DURING CONSTRUCTION.

EXISTING UTILITY PROTECTION:

1. IN ORDER TO REDUCE THE DISRUPTION AND COST OF UTILITY DAMAGES OCCURRING IN THE DUVAL COUNTY RIGHT-OF-WAY AND EASEMENTS, THE CONTRACTOR SHALL PREVENT DAMAGES TO EXISTING UTILITIES CAUSED BY HIS WORK THROUGH FIELD VERIFICATION OF THE LOCATION OF THE EXISTING UTILITIES. IN THE CASE OF OPEN EXCAVATION, VERIFICATION MAY BE PERFORMED DURING THE CONTRACTORS WORK. IN THE CASE OF DIRECTIONAL DRILLING, VERIFICATION SHALL TAKE PLACE PRIOR TO MOBILIZATION OF THE DRILLING EQUIPMENT.
2. THE CONTRACTOR SHALL VERIFY THE LOCATION OF EXISTING UTILITIES AS NEEDED TO AVOID CONTACT. EXISTING UTILITIES SHALL BE EXPOSED USING DETECTION EQUIPMENT OR OTHER ACCEPTABLE MEANS. SUCH METHODS MAY INCLUDE BUT SHALL NOT BE LIMITED TO "SOFT DIG" EQUIPMENT AND GROUND PENETRATING RADAR (GPR). THE EXCAVATOR SHALL BE HELD LIABLE FOR DAMAGES CAUSED TO THE CITY'S/JEA'S INFRASTRUCTURE AND THE EXISTING FACILITIES OF OTHER UTILITY COMPANIES.
3. IT SHALL BE THE SOLE RESPONSIBILITY OF THE CONTRACTOR TO LOCATE AND AVOID ALL UTILITIES, OTHER STRUCTURES AND OBSTRUCTIONS BOTH ABOVE AND BELOW GROUND SURFACE. ALL DAMAGE RESULTING FROM THE CONTRACTOR'S FAILURE TO COMPLY WITH THIS REQUIREMENT SHALL BE REPAIRED AT THE CONTRACTOR'S EXPENSE.

FIRE HYDRANTS:

1. DELIVER REMOVED EXISTING FIRE HYDRANTS TO JEA PEARL STREET

RESTORATION NOTES:

1. THE CONTRACTOR SHALL EMPLOY A LAND SURVEYOR, REGISTERED IN THE STATE OF FLORIDA, TO REFERENCE AND RESTORE PROPERTY CORNERS AND LANDMARKS WHICH MAY BE DISTURBED BY CONSTRUCTION, KNOWN CORNER LOCATIONS ARE AVAILABLE FROM THE CITY OF JACKSONVILLE ENGINEERING DIVISION.
2. THE CONTRACTOR SHALL RESTORE/REPLACE ALL CULVERTS, HEADWALLS AND STORM DRAIN INLETS REMOVED OR DISTURBED BY THE CONSTRUCTION OPERATION.
3. TRAFFIC SIGNS AND PAVEMENT MARKINGS SHALL BE RESTORED TO THEIR PRE-CONSTRUCTION CONDITION IN ACCORDANCE WITH CITY OF JACKSONVILLE/FDOT STANDARD SPECIFICATIONS.
4. SIDEWALKS, DRIVEWAYS AND CURBING DAMAGED OR REMOVED DURING CONSTRUCTION SHALL BE REPLACED IN ACCORDANCE WITH JACKSONVILLE STANDARD SPECIFICATIONS. SIDEWALKS REMOVED AND REPLACED IN CURB AND GUTTER AREAS AT INTERSECTIONS SHALL HAVE HANDICAP RAMPS INSTALLED. DRIVEWAYS AND SIDEWALKS SHALL BE SAWCUT ALONG THE RIGHT-OF-WAY LINE OR NEAREST JOINT AND REMOVED AND REPLACED TO THE EDGE OF STREET.
5. GRASS SOD SHALL BE FURNISHED AND PLACED IN THE AREAS DISTURBED OR DAMAGED BY THE CONSTRUCTION OPERATION.
6. ALL PAVEMENT REPAIR SHALL BE IN ACCORDANCE WITH THE CITY OF JACKSONVILLE/FDOT STANDARD DETAILS AND SPECIFICATIONS LATEST EDITION.
7. UNLESS OTHERWISE NOTED, REMOVE AND REPLACE EXISTING PAVEMENT AS PER C.O.J. CASE X (10) PAVEMENT REPLACEMENT DETAIL.
8. CONTRACTOR MUST MAINTAIN AND PRESERVE NEWLY GRADED AREAS AND REPAIR AREAS WHERE SETTLING AND EROSION HAVE OCCURRED.

UTILITY CONTACTS:

A. AMERICAN TELEPHONE & TELEGRAPH CO. — 904-353-2229
B. BELLSOUTH TELEPHONE CO. ~ GARRETT RIGBY - PM NORTH DISTRICT — 904-519-2544
C. BELLSOUTH TELEPHONE CO. ~ LARRY KEELS - PM SOUTH DISTRICT — 904-519-2529
D. CITY OF JACKSONVILLE PUBLIC WORKS DEPT. — 904-630-1665
E. CITY OF JACKSONVILLE STREETS AND DRAINAGE DEPT. — 904-630-1341
F. CITY OF JACKSONVILLE TRAFFIC ENGINEERING DEPT. — 904-387-8863
G. FLORIDA DEPT. OF TRANSPORTATION — 904-381-8778
H. JEA - COLLECTION & DISTRIBUTION — 904-665-8491
I. JEA - GENERAL INFORMATION — 904-665-6000
J. JEA - PROJECT OUTREACH — 904-665-7500
K. JEA - POWER OUTAGES — 904-665-0300
L. JEA - SEWER PROBLEMS — 904-665-4802
M. JEA - WATER PROBLEMS — 904-665-4801
N. JEA - WATER & SEWER LOCATES — 904-665-7613
O. COMCAST — 904-380-6423
P. MOBILE ONE — 904-733-9533
Q. TECO/PEOPLES GAS ~ JOHN CUNNINGHAM ~ ENGINEERING SUPERVISOR — 904-739-1211
R. SUNSHINE ONE CALL — 800-432-4770

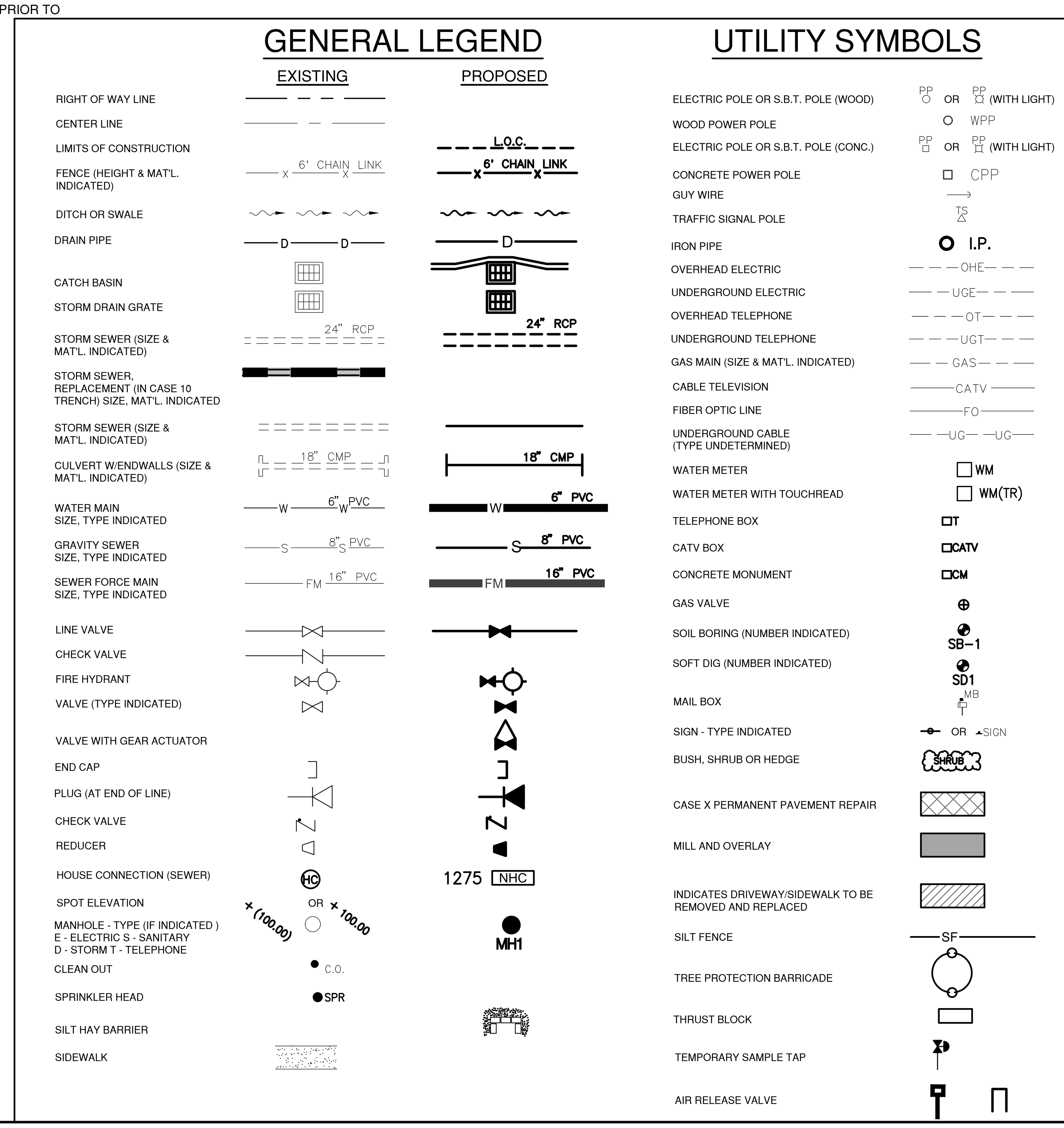

INSTALLATION NOTES:

NOT APPLICABLE	APPLICABLE	
☒	☐	1. CONTRACTOR TO REHABILITATE ALL MANHOLES ON PIPE BURST SEWERS VIA COATING/LINING PER JEA SPECIFICATION 446-2, UNLESS OTHERWISE NOTED ON THE PLANS.
☒	☐	2. CONTRACTOR TO RENEW, REHABILITATE, REPLACE OR REINSTALL AS APPLICABLE ALL SERVICE LATERALS TO R.O.W. LINE.
☒	☐	3. CONTRACTOR TO INSTALL SEWER SERVICE PIPING A MINIMUM OF 60 INCHES BELOW GRADE. WHERE NEW SANITARY SEWER MAIN IS LESS THAN 5 FEET DEEP, THE SEWER SERVICE PIPE SHALL BE INSTALLED AS DEEP AS POSSIBLE.
☐	☒	4. WHEN THE DISTANCE BETWEEN A POWER POLE AND THE TRENCH IS LESS THAN THE TRENCH DEPTH, THE CONTRACTOR SHALL BE RESPONSIBLE FOR COORDINATING WITH JEA ELECTRICAL PERSONNEL TO SECURE POWER POLES. THE CONTACTS FOR JEA ARE AS FOLLOWS: NORTHSIDE~EAST of US-1 MIKE CORBITT @ 665-7991 (mobile 662-0635) NORTHSIDE~WEST of US-1 ANDY YEAGER @ 665-7998 (mobile 662-0622) NORTHSIDE~BACKUP ALAN AINSLEY @ 665-7303 (mobile 662-6557) SOUTHSIDE~SOUTH of BEACH BLVD. TOM KERNS @ 665-6847 (mobile 860-1687) SOUTHSIDE~NORTH of BEACH BLVD. DERYL BASFORD @ 665-6855 (mobile 662-0616) SOUTHSIDE~BACKUP EDDIE GALES @ 665-6855 (mobile 662-0616) A MINIMUM OF TWO (2) WORKING DAYS NOTICE IS REQUIRED FOR AN OUTSIDE MEETING WITH JEA ELECTRICAL TO DISCUSS THE REQUIRED WORK. ADDITIONAL TIME WILL BE REQUIRED BY JEA ELECTRICAL FOR ANY REQUIRED WORK TO BE ACCOMPLISHED.
☒	☐	5. ALL NEW STORM DRAIN PIPE JOINTS SHALL BE WRAPPED WITH FILTER FABRIC.
☐	☒	6. THE DESIGN FOR THE PROJECT IS BASED UPON THE "OPEN-CUT" METHOD OF CONSTRUCTION. IF USING ALTERNATIVE MEANS OR METHODS, THE CONTRACTOR SHALL FOLLOW ALL APPLICABLE STANDARDS FOR THAT MEANS OR METHOD.
☐	☒	7. THE CONTRACTOR SHALL MINIMIZE SERVICE INTERRUPTIONS AT SERVICE CONNECTIONS. THE MEANS AND METHODS SHALL BE LEFT TO THE DISCRETION OF THE CONTRACTOR, SUBJECT TO THE REQUIREMENTS OF THE CONTRACT SPECIFICATIONS. NO EXISTING ACTIVE SERVICE SHALL BE LEFT INTERRUPTED AT THE END OF THE WORK DAY.
☐	☒	8. CONTRACTOR SHALL PROVIDE ADDITIONAL CORPORATION STOPS FOR FILLING AND DRAINING PURPOSES DURING CONSTRUCTION AS NEEDED. CORPORATION STOPS ARE TO BE PLUGGED AND LEFT IN PLACE. INDICATE CORPORATION STOP LOCATIONS ON RECORD DRAWINGS (AS-BUILTS).
☐	☒	9. WATER AND SEWER SERVICES SHALL BE TRANSFERRED TO THE NEW MAIN UPON COMPLETION AND F.D.E.P./J.E.A. CERTIFICATION, AND PRIOR TO THE EXISTING MAINS BEING ABANDONED.
☐	☒	10. IF EXISTING VALVES ARE IN UNPAVED AREAS AND ARE TO BE TAKEN OUT OF SERVICE, THEY SHALL BE CLOSED AND THE VALVE BOX AND COVER SHALL BE REMOVED. IF THE VALVES ARE UNDER PAVED AREAS, THEY SHALL BE CLOSED, THE VALVE BOX GROUT FILLED AND THE COVER REMOVED.
☐	☒	11. CONTRACTOR SHALL REPLACE EXISTING WATER METER BOXES WHEN DEEMED NECESSARY BY THE JEA INSPECTOR.
☐	☒	12. CONTRACTOR TO PROVIDE ADDITIONAL DEPTH OF BURY VIA PIPE JOINT DEFLECTION TO ACCOMMODATE VALVE SELECTION PER JEA STANDARDS.
☐	☒	13. WATER METERS MAY REQUIRE RELOCATION FOR CONSTRUCTION, CONTRACTOR SHALL CONTACT JEA METER DEPARTMENT AND RELOCATE WATER METERS AS NECESSARY.
☐	☒	14. PRIOR TO COMMENCING ANY EXCAVATION OR GRADING, THE CONTRACTOR SHALL OBTAIN ALL GEOTECHNICAL AND TOPOGRAPHIC SURVEY DATA AND LOCATIONS OF ABOVE GROUND AND UNDERGROUND UTILITIES. SHOULD THE CONTRACTOR DISCOVER ANY INACCURACIES, ERRORS OR OMISSIONS IN THE SURVEY DATA, HE SHALL IMMEDIATELY NOTIFY THE DESIGN ENGINEER IN ORDER THAT PROPER ADJUSTMENTS CAN BE ANTICIPATED AND ORDERED.
☐	☒	15. SHEET PILING WILL BE REQUIRED ON ALL EXCAVATIONS DEEPER THAN 16 FEET.
☒	☐	16. ZERO JOINT DEFLECTION WILL BE ALLOWED ON 20" OR LARGER PVC PRESSURE PIPE. THE MAXIMUM JOINT DEFLECTION SHALL BE LIMITED TO 60% OF THE PIPE MANUFACTURER'S RECOMMENDATION ON ALL 20" AND LARGER DUCTILE IRON PRESSURE PIPE. THE CONTRACTOR SHALL PROPERLY INSPECT THE INSTALLATION OF ALL PIPE JOINTS TO ENSURE THESE JOINT DEFLECTION LIMITS ARE NOT EXCEEDED.
☐	☒	17. CONTRACTOR SHALL FOLLOW JEA STANDARDS AND ALL APPLICABLE REGULATORY AGENCY REQUIREMENTS IF ANY ASBESTOS CEMENT PIPE IS IMPACTED DURING CONSTRUCTION.
☐	☒	18. WORKDAY DURATION: THE CONTRACTOR SHALL PERFORM WORK ALL DAY ON WEEKENDS. WEEKEND WORK WILL BEGIN AT 6:00 PM ON FRIDAY AND STOP AT 6:00 AM ON MONDAY. PER CITY OF JACKSONVILLE/HOSPITAL, THE CONTRACTOR WILL VERIFY AND ADHERE TO NOISE ORDINANCE REQUIREMENTS DURING CONSTRUCTION.
☐	☒	19. CONTRACTOR WILL INSTALL CROSSINGS IN ACCORDANCE TO JEA PLATES W-32/34. IN THE EVENT FIELD CONDITIONS PREVENT A FULL LENGTH OF PIPE AT THE CROSSING, ONE CONTINUOUS PIECE OF PIPE CENTERED AT THE CROSSING WILL BE UTILIZED.
☐	☒	20. CONTRACTOR WILL REMOVE, STORE, AND REINSTALL IN THE ORIGINAL LOCATION ALL GRANITE CURB SECTIONS THAT WILL BE IMPACTED BY CONSTRUCTION.

ABBREVIATIONS:

AC	ASBESTOS CEMENT
A.G.	ALLEY GRATE
ARV	AIR RELEASE VALVE
B/L	BASE LINE
B.M.	BENCH MARK
BC	BOTTOM OF CURVE
CLDI	CEMENT LINED DUCTILE IRON
C.B.	CATCH BASIN
C.I.	CAST IRON
C/L	CENTER LINE
C.E.P.	CITY ELECTRIC POLE
CONC.	CONCRETE
CONST.	CONSTRUCTION
C.M.P.	CORRUGATED METAL PIPE
C.M.P.A.	CORRUGATED METAL PIPE ARCH
CULV.	CULVERT
C&G	CURB & GUTTER
C	CUT
D.B.I.	DITCH BOTTOM INVERT
D.W. OR DR	DRIVEWAY
D.I.	DUCTILE IRON
E.O.P.	EDGE OF PAVEMENT
ELEV.	ELEVATION
ERCP	ELLIPTICAL REINFORCED CONC. PIPE
EXP. JT.	EXPANSION JOINT
F	FILL
F.H.	FIRE HYDRANT
F/L	FLOW LINE
FM	FORCE MAIN
FRP	FIBERGLASS REINFORCED PIPE
GALV./GLV	GALVANIZED
G	GAS LINE
G.V.	GAS VALVE
HDPE	HIGH DENSITY POLYETHYLENE PIPE
H.W.	HEAD WALL
H.C.	HIGH CURB
INT.	INTERSECTION
INV.	INVERT
I.P.	IRON PIPE
J.W.W.	JACKSONVILLE WATER WORKS
LT.	LEFT
MB	MAIL BOX
M.H.	MANHOLE
MJ	MECHANICAL JOINT
N.T.S.	NOT TO SCALE
O.E.	OVERHEAD ELECTRIC
O.T.	OVERHEAD TELEPHONE
PC350	PRESSURE CLASS 350
P.R.M.	PERMANENT REFERENCE MONUMENT
P.V.C.	POLYVINYL CHLORIDE
r	RADIUS
R	RATE
R.C.P.	REINFORCED CONCRETE PIPE
RS	RAW SEWAGE
RT	RIGHT
R/W	RIGHT OF WAY
R.D.	ROOF DRAIN
S/W	SIDE WALK
SAN	SANITARY SEWER
S.B.T.	SOUTHERN BELL TELEPHONE
STA	STATION
TC	TOP OF CURVE
U.G.E.	UNDERGROUND ELECTRIC
U.G.T.	UNDERGROUND TELEPHONE
U.S.C. & G.S.	UNITED STATES COASTAL & GEODETIC SURVEY
V.C.	VITRIFIED CLAY
WM	WATER METER
W.V.	WATER VALVE
WLP	WOOD LIGHT POLE
WPP	WOOD POWER POLE
WTP	WOOD TELEPHONE POLE

JonesEdmunds
CERTIFICATE OF AUTHORIZATION #1841
730 NE WALDO ROAD, GAINESVILLE, FLORIDA 32641 / (352) 377-5821
8657 BAYPINE ROAD SUITE 300, JACKSONVILLE, FL 32256 / (904) 744-5401

NO.	BY	DATE	REVISIONS
6.			
5.			
4.			
3.			
2.			
1.			

DESIGN ENGINEER: KENNETH A. FRASER, PE
FLORIDA REGISTRATION NO. 57452

DESIGNER:	KFRASER
DRAWN BY:	RWADE
DATE:	MARCH 30, 2020
CHECKED BY:	HBRIDGES
DATE:	MARCH 30, 2020

JEA Building Community

BOULEVARD FORCE MAIN AND WATER MAIN REPLACEMENT
NOTES, LEGENDS, ABBREVIATIONS

PROJ. NO. 09302-055-01
DATE: MARCH 30, 2020
SCALE: NONE
NO. SHEETS 35
SHEET NO. 2
DRAWING NO. G2

Y:\09302-jea\Projects\055-01 boulevard fm & wm replacement\CAD\Dwgs\General\0930205501-G02.dwg Current Layout Tab = G2 Fri Mar 27, 2020 - 15:54
xrefs Attached= XR055-G-TB [\\tpapanU1\panclients\09302-JEA\Projects\055-01 BOULEVARD FM & WM REPLACEMENT\CAD\Dwgs\xref\general\XR055-G-TB.dwg]

INDEX OF DRAWINGS

Sheet No.	Drawing No.	Title
1	G1	COVER SHEET
2	G2	NOTES, LEGENDS, ABBREVIATIONS
3	G3	DRAWING INDEX AND PROJECT LAYOUT
4	G4	SURVEYOR NOTES AND TEST HOLE DATA
5	C1	PLAN AND PROFILE
6	C2	PLAN AND PROFILE
7	C3	PLAN AND PROFILE
8	C4	PLAN AND PROFILE
9	C5	PLAN AND PROFILE
10	C6	PLAN AND PROFILE
11	C7	PLAN AND PROFILE
12	C8	PLAN AND PROFILE
13	D1	STORMWATER POLLUTION PREVENTION DETAILS
14	D2	STORMWATER POLLUTION PREVENTION DETAILS
15	D3	STORMWATER POLLUTION PREVENTION DETAILS
16	D4	JEA STANDARD DETAILS
17	D5	JEA STANDARD DETAILS
18	D6	JEA STANDARD DETAILS
19	D7	JEA STANDARD DETAILS
20	D8	JEA STANDARD DETAILS
21	D9	JEA STANDARD DETAILS
22	D10	JEA STANDARD DETAILS
23	D11	JEA STANDARD DETAILS
24	TTC-1	TTC NOTES AND LEGEND
25	TTC-2	TEMPORARY TRAFFIC CONTROL PLAN
26	TTC-3	TEMPORARY TRAFFIC CONTROL PLAN
27	TTC-4	TEMPORARY TRAFFIC CONTROL PLAN
28	TTC-5	TEMPORARY TRAFFIC CONTROL PLAN
29	TTC-6	TEMPORARY TRAFFIC CONTROL PLAN
30	TTC-7	TEMPORARY TRAFFIC CONTROL PLAN
31	TTC-8	TTC DETAILS-FDOT INDEX 102-605
32	TTC-9	TTC DETAILS-FDOT INDEX 102-616
33	TTC-10	TTC DETAILS-FDOT INDEX 102-621
34	TTC-11	TTC DETAILS-FDOT INDEX 102-660
35	TTC-12	TTC DETAILS- MUTCD 6H-27

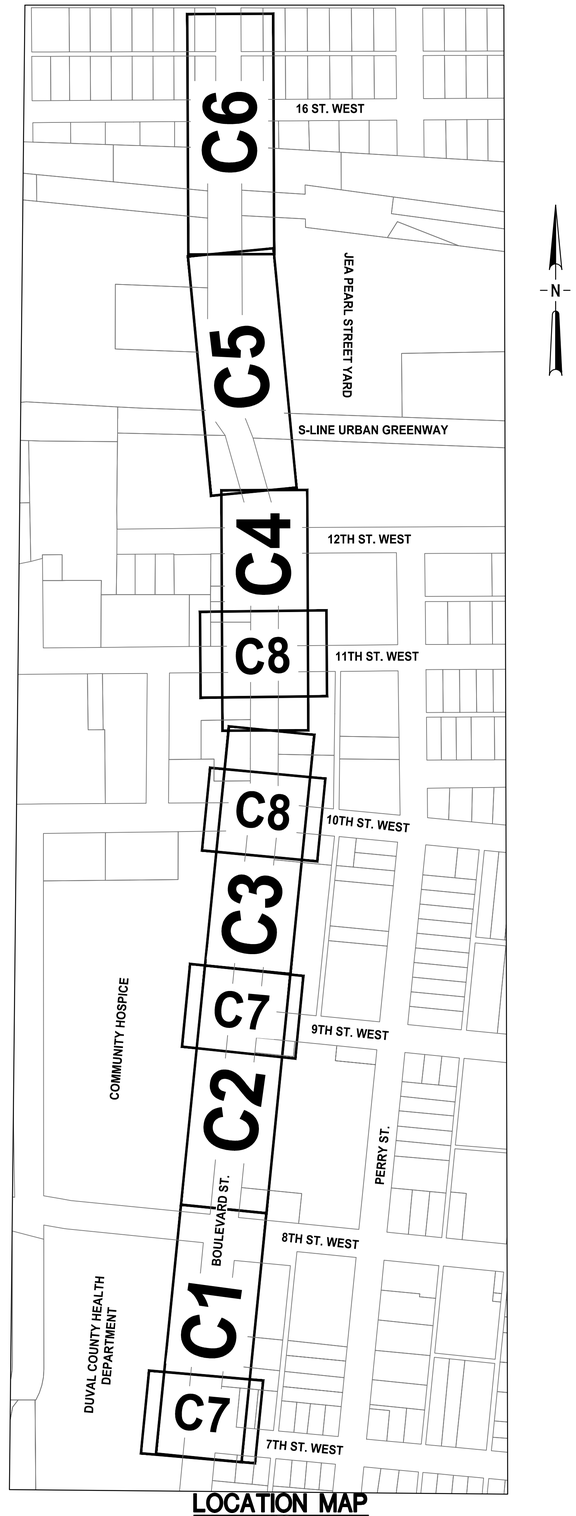

LOCATION MAP
NTS

JonesEdmunds
CERTIFICATE OF AUTHORIZATION #1841
730 NE WALDO ROAD, GAINESVILLE, FLORIDA 32641 / (352) 377-5821
8657 BAYPINE ROAD SUITE 300, JACKSONVILLE, FL 32256 / (904) 744-5401

NO.	BY	DATE	REVISIONS
6.			
5.			
4.			
3.			
2.			
1.			

DESIGN ENGINEER
KENNETH A. FRASER, PE
FLORIDA REGISTRATION NO.
57452

DESIGNER: KFRASER
DRAWN BY: RWADE
DATE: MARCH 30, 2020
CHECKED BY: HBRIDGES
DATE: MARCH 30, 2020

JEA Building Community

BOULEVARD FORCE MAIN AND
WATER MAIN REPLACEMENT
DRAWING INDEX AND PROJECT LAYOUT

PROJ. NO. 09302-055-01
DATE: MARCH 30, 2020
SCALE: NOTED

NO. SHEETS 35
SHEET NO. 3
DRAWING NO. G3

XR055-C-DESIGN [Y:\09302-JEA\Projects\055-01 BOULEVARD FM & WM REPLACEMENT\CAD\Dwgs\Xref\civil\XR055-C-DESIGN.dwg]
XR055-C-KEYMAP [Y:\09302-JEA\Projects\055-01 BOULEVARD FM & WM REPLACEMENT\CAD\Dwgs\Xref\civil\XR055-C-KEYMAP.dwg]
XR055-C-Survey [Y:\09302-JEA\Projects\055-01 BOULEVARD FM & WM REPLACEMENT\CAD\Dwgs\Xref\civil\XR055-C-Survey.dwg]
XR055-C-PARCELS [..\Xref\civil\XR055-C-PARCELS.dwg]
Y:\09302-jea\Projects\055-01 boulevard fm & wm replacement\CAD\Dwgs\General\0930205501-G03.dwg Current Layout Tab = G3 Fri Mar 27, 2020 - 15:54

LEGEND

ID	IDENTIFICATION
IPF	IRON PIPE FOUND
NDS	NAIL & DISK SET
NDF	NAIL & DISK FOUND
XCF	X–CUT FOUND
IRF	IRON ROD FOUND
LB	LICENSED BUSINESS
ORB	OFFICIAL RECORDS BOOK
PG(S)	PAGE (S)
RE	REAL ESTATE NUMBER NUMBER
BFP	BACK FLOW PREVENTER
INV	INVERT
ELEV	ELEVATION
VC	VITRIFIED CLAY
PVC	POLYVINYL CHLORIDE
RCP	REINFORCED CONCRETE PIPE
CIP	CAST IRON PIPE
TCP	TERRA COTTA PIPE
NAVD	NORTH AMERICAN VERTICAL DATUM
TBM	TEMPORARY BENCHMARK
FPB	FIBER OPTIC PULL BOX
EPB	ELECTRIC PULL BOX
ESB	ELECTRIC SPLICE BOX
FOC	FIBER OPTIC CABLE
FOM	FIBER OPTIC MARKER
TEM	TELEPHONE MARKER
TPB	TELEPHONE PULL BOX
CLF	CHAIN LINK FENCE
DLPB	DATA LINE PULL BOX
MH	MANHOLE
SPAL	SEGO PALM
ARV	AIR RELEASE VALVE
CATV	CABLE TELEVISION
BFP	BACK FLOW PREVENTER
TSSB	TRAFFIC SIGNAL SERVICE BOX
SS	UNDERGROUND SANITARY SEWER LINE
TS	UNDERGROUND TRAFFIC SIGNAL LINE
FRP	FIBERGLASS REINFORCED PIPE
CAB	CABBAGE

W	WATERLINE
UGE	UNDERGROUND ELECTRIC LINE
GAS	UNDERGROUND GAS LINE
OHU	OVERHEAD UTILITY
UGT	UNDERGROUND TELEPHONE LINE
ST	UNDERGROUND STORM DRAIN LINE
FM	UNDERGROUND FORCEMAIN
STA	STATION
OFF	OFFSET
TEL	TELEPHONE
CONC	CONCRETE
WMH	WATER MANHOLE
SMH	SANITARY MANHOLE
DMH	DRAINAGE MANHOLE
TMH	TELEPHONE MANHOLE
EMH	ELECTRIC MANHOLE
	SIGN
WV	WATER VALVE
GV	GAS VALVE
	GUY ANCHOR
	DRAINAGE MANHOLE
	SANITARY MANHOLE
	TELEPHONE MANHOLE
	ELECTRIC MANHOLE
WM	WATER METER
	FIRE HYDRANT
MW	MONITORING WELL
CLP	CONCRETE POWER POLE
MLP	METAL LIGHT POLE
CPP	CONCRETE POWER POLE
WPP	METAL LIGHT POLE
WPP/L	METAL LIGHT POLE

SURVEYOR'S NOTES:

1. THIS IS NOT A BOUNDARY SURVEY.
2. ALL OF THE IMPROVEMENTS AS SHOWN HEREON WERE LOCATED BY THIS SURVEY.
3. UNDERGROUND UTILITIES, INCLUDING, BUT NOT LIMITED TO, WATER LINES, SEWER LINES, DRAINAGE LINES, ELECTRIC LINES, CABLE TELEVISION AND TELEPHONE LINES WERE LOCATED BY THIS SURVEY, AS MARKED BY F.R. ALEMAN; VISIBLE ABOVEGROUND APPURTENANCES WERE LOCATED AS DELINEATED ON THIS SURVEY.
4. OWNERSHIP OF FENCES, IF ANY, IS UNDETERMINED.
5. THIS IS A COPYRIGHTED DOCUMENT; NO PORTION OF IT MAY BE REPRODUCED, WHOLLY OR IN PART, WITHOUT THE EXPRESSED WRITTEN PERMISSION OF R.E. HOLLAND & ASSOCIATES, INC.
6. THE FIELD WORK OF THIS SURVEY WAS COMPLETED ON 4–17–19.
7. THIS SURVEY MAP DOES NOT REFLECT OR DETERMINE OWNERSHIP.
8. THE RELATIVE LINEAR DISTANCE ACCURACY FOR THIS SURVEY EXCEEDS 1:10,000.
9. ALL MEASUREMENTS ARE IN U.S. STANDARD FEET AND WERE MADE WITH A THEODOLITE AND ELECTRONIC DISTANCE MEASURING DEVICE AND/OR STEEL TAPE.
10. THIS SURVEY IS CERTIFIED ONLY TO THE NAMED PARTIES HEREON AND MAY NOT BE TRANSFERRED TO ANY THIRD PARTIES OR SUCCESSORS IN TITLE, AND SAID SURVEY IS FURTHER CERTIFIED AS BEING CORRECT AS OF THE LAST DATE OF FIELD SURVEY.
11. ALL PROPERTY LINES SHOWN HEREON ARE FOR GRAPHICAL PURPOSES ONLY, NO BOUNDARY SURVEYING SERVICES PROVIDED.
12. ANY INFORMATION SHOWN ON THIS SURVEY AS "INFORMATION SUPPLIED BY CLIENT" OR "INFORMATION AS SUPPLIED BY OTHERS" IS NOT WARRANTED BY THE UNDERSIGNING SURVEYOR, AND THE FIRM AND THE UNDERSIGNED SURVEYOR ASSUMES NO LIABILITY, EXPRESSED OR IMPLIED, FOR THE CORRECTNESS OR ACCURACY OF THE SUPPLIED DATA.
13. COORDINATES SHOWN HEREON ARE IN US SURVEY FEET AND ARE REFERENCED TO THE FLORIDA STATE PLANE COORDINATE SYSTEM, EAST ZONE, NORTH AMERICAN DATUM OF 1983, 2011 ADJUSTMENT, AS DERIVED FROM THE TRIMBLE VIRTUAL REFERENCE STATION NETWORK.
14. REFERENCE BENCHMARK: CITY OF JACKSONVILLE BENCHMARK: X–CUT ON CONCRETE, 4.2'W OF BACK OF WALK ON MAIN STREET, & 0.7'N OF BACK OF WALK ON 16TH STREET EAST. 44.8'E OF C/L OF MAIN & 34'N OF C/L OF 16TH ST E. ELEVATION 20.595 NAVD 88.

TEST HOLE DATA TABLE

Test Hole No.	NORTHING	EASTING	Station	Offset	GR ELEV	TOP PIPE ELEV	PIPE MATERIAL
TH 1	2185981.56	447597.43	11+14.05	63.96' R	15.82	12.62	8"CI WATER
TH 2	2186011.08	447601.37	11+43.82	64.71' R	15.32	12.82	4"CI WATER
TH 3	2185999.36	447528.05	11+24.30	6.93' L	15.63	13.09	8"CI WATER
TH 4	2185975.00	447510.42	10+98.38	21.86' L	14.77	11.62	8"CI WATER
TH 5	2186081.21	447536.41	12+06.64	7.00' L	15.82	12.90	8"CI WATER
TH 6	2186080.64	447523.71	12+04.83	19.58' L	15.74	11.66	3-2"PLASTIC DUCT SYS/TELE/FOC
TH 7	2186081.13	447521.87	12+05.14	21.46' L	15.92	12.74	8"CI WATER
TH 8	2186082.34	447510.51	12+05.24	32.89' L	14.60	11.50	4-5", 1-2" PLASTIC DUCT SYS/ELEC
TH 9	2186388.29	447562.91	15+14.84	10.56' L	16.33	13.95	8"CI WATER
TH 10	2186607.90	447618.72	17+39.10	16.39' R	17.03	13.99	1.5"GALV GAS
TH 11	2186659.80	447623.92	17+91.27	16.46' R	16.91	13.42	24"RCP STORM
TH 12	2186702.23	447627.49	18+33.84	15.84' R	17.15	13.59	6"CI WATER
TH 13	2186731.52	447630.49	18+63.28	15.94' R	17.14	11.84	12"TERRA COTTA SANITARY
TH 14	2186773.22	447634.28	19+05.15	15.61' R	17.35	14.75	1.5"GALV TELE
TH 15	2186816.82	447636.44	19+48.76	13.47' R	17.44	15.15	4-4"PLASTIC DUCT SYS/ELEC
TH 16	2186889.97	447644.25	20+22.32	14.05' R	17.72	14.88	16"DI WATER
TH 16A	2186890.69	447644.28	20+23.04	14.01' R	17.72	14.52	4"PLASTIC FOC
TH 17	2186892.55	447644.55	20+24.92	14.09' R	17.73	14.93	8"CI WATER
TH 18	2186953.18	447652.92	20+86.07	16.45' R	17.81	15.71	18"CI STORM
TH 19	2186959.83	447651.05	20+92.51	13.94' R	17.94	14.45	10"CI WATER
TH 20	2186975.59	447653.23	21+08.41	14.56' R	17.98	12.68	6"CI SANITARY
TH 21	2186980.44	447653.15	21+13.23	14.00' R	17.97	14.62	2"STEEL GAS
TH 22	2186984.47	447657.55	21+17.67	17.98' R	17.80	15.20	15"CI STORM
TH 23	2187100.60	447664.94	22+33.96	13.91' R	17.47	15.46	2-4"PLASTIC TELE
TH 24	2187102.07	447665.04	22+35.43	13.87' R	17.47	17.17	24"x36"ROUGH POUR FOC
TH 25	2187260.95	447658.10	23+92.86	8.67' L	17.18	14.26	10"CI WATER
TH 26	2187409.26	447695.75	25+44.15	14.20' R	16.65	13.00	2"PLASTIC FOC
TH 26A	2187408.21	447696.99	25+43.24	15.53' R	16.64	12.65	6"CI UNKNOWN
TH 27	2187446.65	447689.12	25+80.72	3.92' R	16.84	9.63	6"PLASTIC SANITARY
TH 28	2187440.74	447707.28	25+76.62	22.57' R	16.79	7.49	2"PLASTIC FOC
TH 29	2187443.31	447712.31	25+79.67	27.32' R	16.82	14.19	2"PLASTIC TELE FOC
TH 30	2187455.80	447723.74	25+89.35	37.81' R	16.69	13.29	8"CI WATER
TH 31	2187471.01	447696.34	26+04.67	10.48' R	16.68	12.67	6"STEEL SANITARY
TH 32	2187501.66	447697.83	26+35.32	12.09' R	16.70	14.66	4"ACP TELE FOC
TH 33	2187501.40	447674.48	26+35.16	11.26' L	16.55	14.16	4"RCP TELE FOC
TH 34	2187469.05	447675.01	26+02.80	10.86' L	16.59	12.91	10"STEEL WATER
TH 35	2187459.17	447669.11	25+92.95	16.80' L	16.57	10.07	6"TERRA COTTA SANITARY
TH 35A	2187460.38	447666.89	25+94.17	19.03' L	16.51	13.71	4"STEEL UNKNOWN
TH 36	2187437.66	447663.45	25+69.24	20.74' L	16.56	11.71	2-4"PLASTIC FOC
TH 37	2187437.90	447658.03	25+68.95	26.15' L	16.49	14.69	6"STEEL GAS
TH 38	2187437.63	447652.85	25+68.17	31.28' L	16.35	12.44	14"STEEL FM
TH 39	2187437.70	447650.42	25+68.00	33.71' L	16.31	13.89	4"PLASTIC FOC
TH 40	2187438.03	447649.75	25+68.26	34.41' L	16.31	13.92	4"PLASTIC FOC
TH 41	2187435.20	447625.27	25+63.03	58.49' L	15.99	14.98	2"GALV WATER
TH 42	2187442.33	447668.88	25+74.42	15.79' L	16.68	12.11	6"TERRA COTTA SANITARY
TH 43	2187804.24	447707.02	29+37.86	22.60' R	16.70	11.40	2"PLASTIC FOC
TH 44	2187806.32	447710.59	29+39.92	26.17' R	16.68	13.99	8"CI WATER
TH 45	2187806.33	447730.70	29+39.85	46.28' R	16.45	14.15	8"CI WATER
TH 46	2187818.28	447703.27	29+51.91	18.90' R	16.59	11.05	30"PLASTIC CHILL WATER
TH 47	2187822.47	447703.33	29+56.11	18.99' R	16.58	11.08	30"PLASTIC CHILL WATER
TH 48	2187838.87	447675.94	29+72.62	8.33' L	16.78	13.93	10"CI WATER
TH 49	2187825.11	447673.53	29+58.87	10.80' L	16.29	10.99	6"PLASTIC SANITARY
TH 50	2187813.81	447665.72	29+47.61	18.66' L	16.29	10.69	4"PVC TELE FOC
TH 51	2187814.07	447659.98	29+47.89	24.40' L	16.20	14.71	4"STEEL GAS
TH 52	2187813.68	447653.86	29+47.53	30.52' L	16.04	12.18	14"CI FM
TH 53	2187804.99	447635.38	29+38.92	49.03' L	16.08	13.13	6"PVC WATER
TH 53A	2187807.50	447635.35	29+41.43	49.06' L	15.94	11.96	6"CI UNKNOWN
TH 54	2187800.75	447675.87	29+34.50	8.56' L	16.62	13.47	10"CI WATER
TH 55	2187798.51	447674.32	29+32.27	10.13' L	16.62	10.52	6"PLASTIC SANITARY
TH 56	2188076.43	447699.31	32+10.07	16.07' R	19.18	16.65	6"PVC WATER
TH 57	2188082.97	447699.18	32+16.62	15.96' R	19.22	16.65	2"PLASTIC FOC
TH 58	2188111.42	447694.14	32+45.08	11.05' R	19.42	16.90	6"STEEL GAS
TH 59	2188114.24	447694.13	32+47.91	11.05' R	19.42	13.17	6"PVC ELEC
TH 60	2188362.21	447619.90	35+06.30	8.77' R	23.01	16.11	42"RCP STORM
TH 61	2188398.55	447614.56	35+42.71	3.93' R	23.26	15.06	6"PLASTIC SANITARY
TH 62	2188447.81	447614.53	35+91.96	4.59' R	23.14	17.09	8"STEEL ELEC
TH 63	2188469.28	447611.62	36+13.47	1.98' R	23.19	18.89	10"PVC WATER
TH 64	2188475.85	447612.04	36+20.04	2.49' R	23.17	20.67	15"RCP STORM
TH 65	2188508.05	447612.12	36+52.23	3.01' R	23.18	20.42	4"STEEL TELE
TH 66	2188651.15	447614.12	37+95.29	7.00' R	23.26	18.34	8"WRAP-STEEL ELEC
TH 67	2188733.15	447612.53	38+77.31	6.55' R	23.56	18.63	8"WRAP-STEEL ELEC
TH 68	2188817.35	447611.20	39+61.52	6.39' R	23.77	18.72	8"WRAP-STEEL ELEC
TH 69	2189055.53	447609.24	41+99.70	7.73' R	19.93	14.63	8"WRAP-STEEL ELEC
TH 70	2189074.63	447613.13	42+18.75	11.89' R	19.48	17.61	6"CI UNKNOWN
TH 71	2189051.58	447613.20	41+95.70	11.64' R	19.85	18.60	6"CI UNKNOWN
TH 72	2189073.66	447607.29	42+17.85	6.03' R	19.70	11.65	12"TERRA COTTA SANITARY
TH 73	2189081.32	447625.11	42+25.27	23.96' R	19.08	6.41	2"PLASTIC FOC
TH 74	2189082.62	447626.58	42+26.55	25.45' R	19.07	17.88	18"RCP STORM
TH 75	2189059.58	447607.83	42+03.77	6.38' R	19.94	16.09	14"CI FM

JonesEdmunds
CERTIFICATE OF AUTHORIZATION #1841
730 NE WALDO ROAD, GAINESVILLE, FLORIDA 32641 / (352) 377-5821
8057 BAYMAN ROAD SUITE 200 | JACKSONVILLE, FL 32256 / (904) 745-4501

NO.	BY	DATE	REVISIONS
6.			
5.			
4.			
3.			
2.			
1.			

DESIGN ENGINEER
KENNETH A. FRASER, PE
FLORIDA REGISTRATION NO.
57452

DESIGNED:	KFRASER
DRAWN BY:	RWADE
DATE:	MARCH 30, 2020
CHECKED BY:	HBRIDGES
DATE:	MARCH 30, 2020

JEA Building Community sm

BOULEVARD FORCE MAIN AND WATER MAIN REPLACEMENT
SURVEYOR NOTES AND TEST HOLE DATA

PROJ. NO.	09302-055-01
DATE:	MARCH 30, 2020
SCALE:	NOTED

NO. SHEETS 15 | SHEET NO. 4 | DRAWING NO. G4

XR055–C–DESIGN [Y:\09302–JEA\Projects\055–01 BOULEVARD FM & WM REPLACEMENT\CAD\Dwgs\Xref\civil\XR055–C–DESIGN.dwg]
XR055–C–KEYMAP [Y:\09302–JEA\Projects\055–01 BOULEVARD FM & WM REPLACEMENT\CAD\Dwgs\Xref\civil\XR055–C–KEYMAP.dwg]
XR055–C–Survey [Y:\09302–JEA\Projects\055–01 BOULEVARD FM & WM REPLACEMENT\CAD\Dwgs\Xref\civil\XR055–C–Survey.dwg]
XR055–C–PARCELS [..\Xref\civil\XR055–C–PARCELS.dwg]
Y:\09302–jea\Projects\055–01 boulevard fm & wm replacement\CAD\Dwgs\General\09302055G1–G04.dwg Current Layout Tab = G3 Fri Mar 27, 2020 – 15:54

FURNISH & INSTALL
1-8" TAPPING SLEEVE
1-8" TAPPING VALVE
1-8" LINE STOP VALVE
2-8" DI MJ CAPS
8 LF OF 8" PC350 CLDI WM
STA: 10+96.7
OFFSET: 22.1' L

TEMPORARY SAMPLE TAP #1 PER PLATE W-25

EXISTING 8" CI WM
WATER MH TOP ELEV:15.51

EXISTING PUMP STATION (LS #N368)

PROPOSED 40' X 48' EASEMENT

FURNISH & INSTALL
1-12"X8" DI MJ TEE
34 LF 12" PC350 CLDI WM
5 LF 8" PC350 CLDI WM
STA: 11+23.7
OFFSET: 11.5' L

95 LF OF 16" DR-25 PVC FM

2" SHORT-SIDE WATER SERVICE (TYP.)

PRIOR TO CONSTRUCTION, CONTRACTOR VERIFY TOP ELEVATION OF FM

FURNISH & INSTALL
1-16" DI MJ 45° BEND
1-CONNECTION TO EXISTING 14" CL FM
1-16" GATE VALVE
1-16"X14" DI MJ REDUCER
1-14" DI MJ SOLID SLEEVE
1-14" DI MJ PLUG
10 LF OF 14" DR-25 PVC FM
36 SY OF CASE X TYPE 1 TEMPORARY PAVEMENT REPAIR
STA: 12+22.4
OFFSET: 80.0' L

ABANDON 345 LF OF EXISTING 14" CI FM BY GROUT FILLING

ABANDON 70 LF OF EXISTING 6" VCP SANITARY DRAIN FOR BY GROUT FILLING

PROPOSED 20' X 82' EASEMENT

RE 070781 0500
CITY OF JACKSONVILLE
JOHN N. MCPHERSON PARK
515 6TH ST. W

REMOVE EXISTING ARV VAULT, ARV TO BE RETURNED TO JEA

ABANDON 16 LF OF EXISTING 2" GSP ARV PIPING BY PLUGGING

ABANDON 428 LF OF EXISTING 12" CI WM BY GROUT FILLING

387 LF OF 12" PC350 CLDI WM

REMOVE EXISTING FIRE HYDRANT

FURNISH & INSTALL
1-12"X6" DI MJ TEE
1-6" GATE VALVE
17 LF 6" PC350 CLDI WM
1-6" DI MJ 90° BEND
1-FIRE HYDRANT (W-13)
STA: 15+23.0
OFFSET: 9.2' L

TEMPORARY SAMPLE TAP #4 PER PLATE W-25

FURNISH & INSTALL
1-12" DI MJ 90° BEND
1-12" GATE VALVE
10 LF 12" PC350 CLDI WM
STA: 15+32.5
OFFSET: 9.5' L

EXISTING 12" CI WM

REMOVE EXISTING CAP AND CONNECT TO WM

FURNISH & INSTALL
1-12"X8" DI MJ TEE
6 LF 8" PC350 CLDI WM
1-12" GATE VALVE
1-12" DI MJ PLUG
STA: 10+96.7
OFFSET: 11.5' L

REMOVE & REPLACE 10 LF OF CITY STANDARD CONCRETE CURB & GUTTER (TYP OF 8 LOCATIONS)

REMOVE & REPLACE 6 SY OF CONCRETE SIDEWALK (TYP OF 2 LOCATIONS)

FURNISH & INSTALL
2-12" DI MJ 45° BEND (VERTICAL)
8 LF OF 12" PC350 CLDI WM
STA: 11+03.7
OFFSET: 11.4' L

FURNISH & INSTALL
2-12" DI MJ 45° BEND (VERTICAL)
8 LF OF 12" PC350 CLDI WM
1-12" GATE VALVE
STA: 11+32.1
OFFSET: 11.5' L

FURNISH & INSTALL
2-16" DI MJ 45° BEND (VERTICAL)
4 LF 16" DR-25 PVC FM
STA: 12+36.7
OFFSET: 8.2' R

FURNISH & INSTALL
2-16" DI MJ 45° BEND
8 LF 16" DR-25 PVC FM
STA: 12+24.8
OFFSET: 6.4' R

2" LONG-SIDE WATER SERVICE (TYP.)

ABANDON 417 LF OF EXISTING 8" CI WM BY GROUT FILLING

FURNISH & INSTALL
841 SY OF CASE III/IV PAVEMENT REPAIR

295 LF OF 16" DR-25 PVC FM

2" AIR RELEASE VALVE

FURNISH & INSTALL
2-16" DI MJ 45° BEND
15 LF 16" DR-25 PVC FM
STA: 15+23.0
OFFSET: 8.9' R

REMOVE EXISTING CAP AND CONNECT TO FM

UTILITY IMPROVEMENTS WITHIN 8TH STREET TO BE CONSTRUCTED AS PART OF JEA PROJECT NO. 8004914. FINAL PLANS DATED 8/9/2019

SEE SHEET C7 FOR 7TH STREET CONNECTION DETAILS

EXISTING 8" CI WM

EXISTING 4" CI WM

TEMPORARY SAMPLE TAPS #2 AND #3 PER PLATE W-25

RE 071530 0000
BARONI L. RIVERS
ORB 8248 PG. 589

RE 071532 0000
CARPON IV LLC
ORB 15855, PG. 58
1721 BOULEVARD ST.

RE 071535 0010
FIRST COAST ENERGY
ORB 8581, PG. 2316
430 8TH ST. W

BOULEVARD STREET

7TH STREET W.

8TH STREET W.

MATCH LINE STA. 16+60 - SEE DRAWING C2

GRAPHIC SCALE
0 10 20 40
SCALE IN FEET
1"=20' HORZ

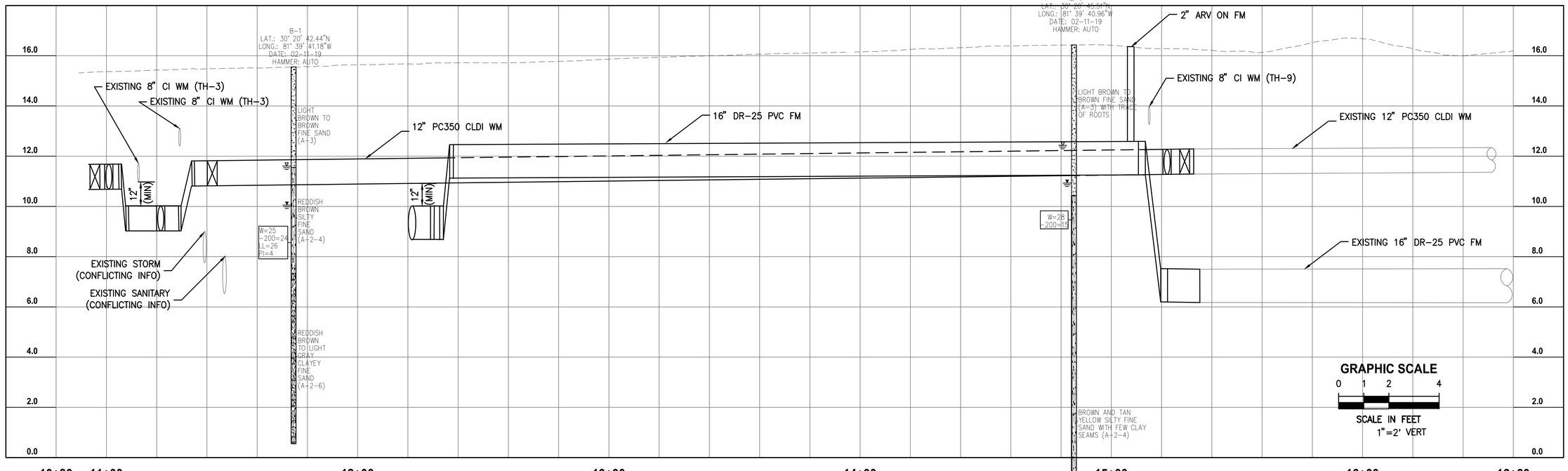

JonesEdmunds
CERTIFICATE OF AUTHORIZATION #1841
739 NE WALDO ROAD, GAINESVILLE, FL 32641 / (352) 377-5821
8657 BAYPINE ROAD SUITE 300, JACKSONVILLE, FL 32256 / (904) 744-5401

NO.	BY	DATE	REVISIONS
6.			
5.			
4.			
3.			
2.			
1.			

DESIGN ENGINEER: KENNETH A. FRASER, PE
FLORIDA REGISTRATION NO. 57452

DESIGNED:	KFRASER	
DRAWN BY:	RWADE	
DATE:	MARCH 30, 2020	
CHECKED BY:	HBRIDGES	
DATE:	MARCH 30, 2020	

JEA Building Community sm

BOULEVARD FORCE MAIN AND WATER MAIN REPLACEMENT
PLAN AND PROFILE

NO. SHEETS	35	
SHEET NO.	5	
DRAWING NO.	C1	
PROJ. NO.	09302-055-01	
DATE:	MARCH 30, 2020	
SCALE:	1"=20'H 1"=2'V	

Xrefs Attached= XR055-G-TBPP [\\Tpapan01\panclients\09302-JEA\Projects\055-01 BOULEVARD FM & WM REPLACEMENT\CAD\Dwgs\Xref\general\XR055-G-TBPP.dwg]
XR055-C-DESIGN [Y:\09302-JEA\Projects\055-01 BOULEVARD FM & WM REPLACEMENT\CAD\Dwgs\Xref\civil\XR055-C-DESIGN.dwg]
XR055-C-KEYMAP [Y:\09302-JEA\Projects\055-01 BOULEVARD FM & WM REPLACEMENT\CAD\Dwgs\Xref\civil\XR055-C-KEYMAP.dwg]
XR055-C-Survey [Y:\09302-JEA\Projects\055-01 BOULEVARD FM & WM REPLACEMENT\CAD\Dwgs\Xref\civil\XR055-C-Survey.dwg]
XR055-C-Profile [Y:\09302-JEA\Projects\055-01 BOULEVARD FM & WM REPLACEMENT\CAD\Dwgs\Xref\civil\XR055-C-Profile.dwg]
XR055-C-HATCH [..\Xref\civil\XR055-C-HATCH.dwg]
Y:\09302-jea\Projects\055-01 boulevard fm & wm replacement\CAD\Dwgs\Civil\0930205501-C01.dwg Current Layout Tab = C1 Fri Mar 27, 2020 - 15:55

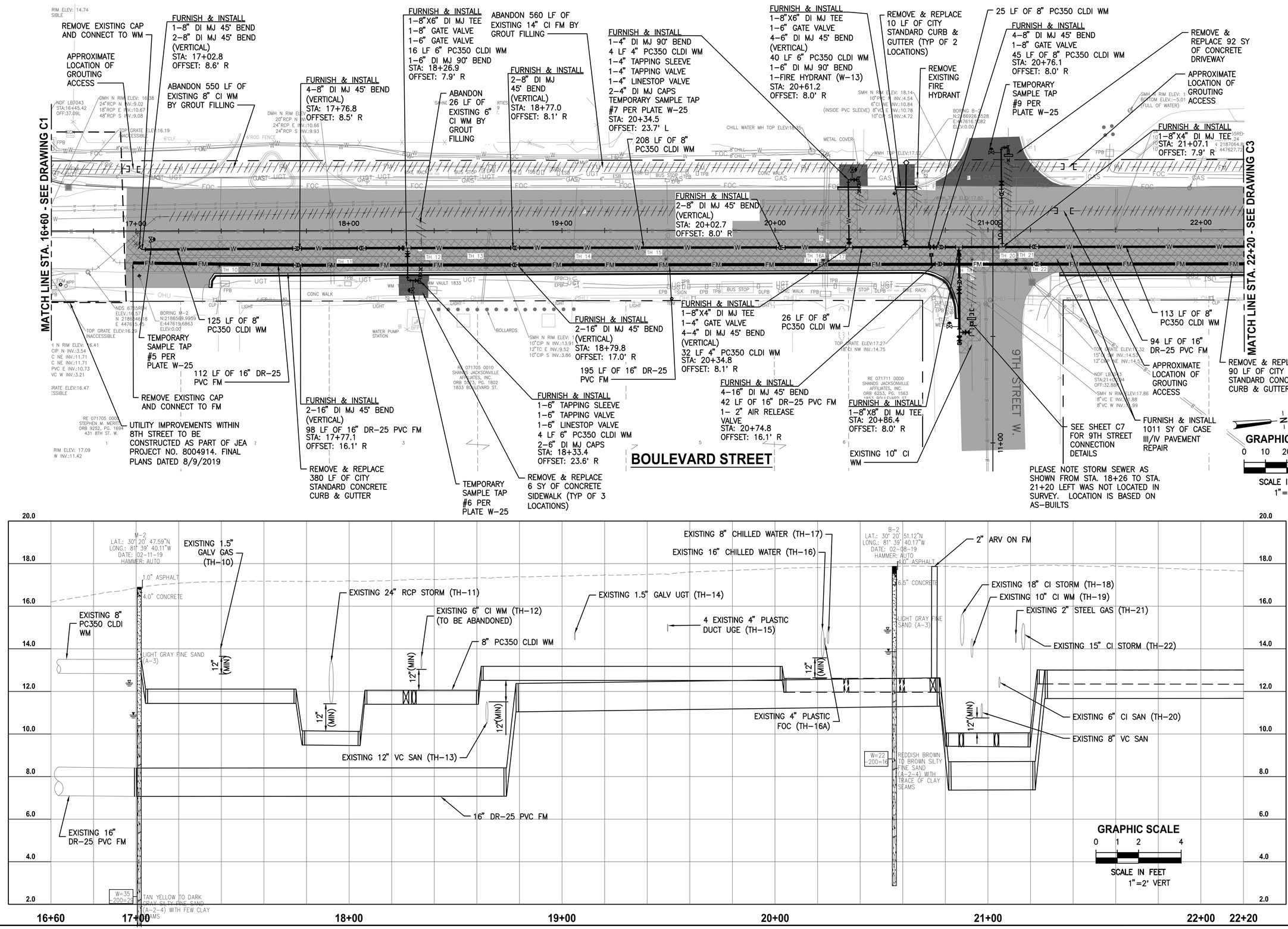

JonesEdmunds
CERTIFICATE OF AUTHORIZATION #1841
239 NE WALDO ROAD GAINESVILLE, FL 32641 / (352) 377-5821
8657 BAYPINE ROAD SUITE 300, JACKSONVILLE, FL 32256 / (904) 744-5401

NO.	BY	DATE	REVISIONS
6.			
5.			
4.			
3.			
2.			
1.			

DESIGNER: KFRASER
DRAWN BY: RWADE
DATE: MARCH 30, 2020
CHECKED BY: HBRIDGES
DATE: MARCH 30, 2020

DESIGN ENGINEER: KENNETH A. FRASER, PE
FLORIDA REGISTRATION NO. 57452

JEA Building Community sm

BOULEVARD FORCE MAIN AND WATER MAIN REPLACEMENT PLAN AND PROFILE

PROJ. NO. 09302-055-01
DATE: MARCH 30, 2020
SCALE: 1"=20'H 1"=2'V

NO. SHEETS 35
SHEET NO. 6
DRAWING NO. C2

Xrefs Attached= XR055-C-TBPP [Y:\09302-JEA\Projects\055-01 BOULEVARD FM & WM REPLACEMENT\CAD\Dwgs\Xref\general\XR055-C-TBPP.dwg] XR055-C-DESIGN [Y:\09302-JEA\Projects\055-01 BOULEVARD FM & WM REPLACEMENT\CAD\Dwgs\Xref\civil\XR055-C-DESIGN.dwg] XR055-C-KEYMAP [Y:\09302-JEA\Projects\055-01 BOULEVARD FM & WM REPLACEMENT\CAD\Dwgs\Xref\civil\XR055-C-KEYMAP.dwg] XR055-C-Survey [Y:\09302-JEA\Projects\055-01 BOULEVARD FM & WM REPLACEMENT\CAD\Dwgs\Xref\civil\XR055-C-Survey.dwg] XR055-C-Profile [Y:\09302-JEA\Projects\055-01 BOULEVARD FM & WM REPLACEMENT\CAD\Dwgs\Xref\civil\XR055-C-Profile.dwg] XR055-C-HATCH [..\Xref\civil\XR055-C-HATCH.dwg]
Y:\09302-jea\Projects\055-01 boulevard fm & wm replacement\CAD\Dwgs\Civil\093020501-C02.dwg Current Layout Tab = C2 Fri Mar 27, 2020 - 15:55

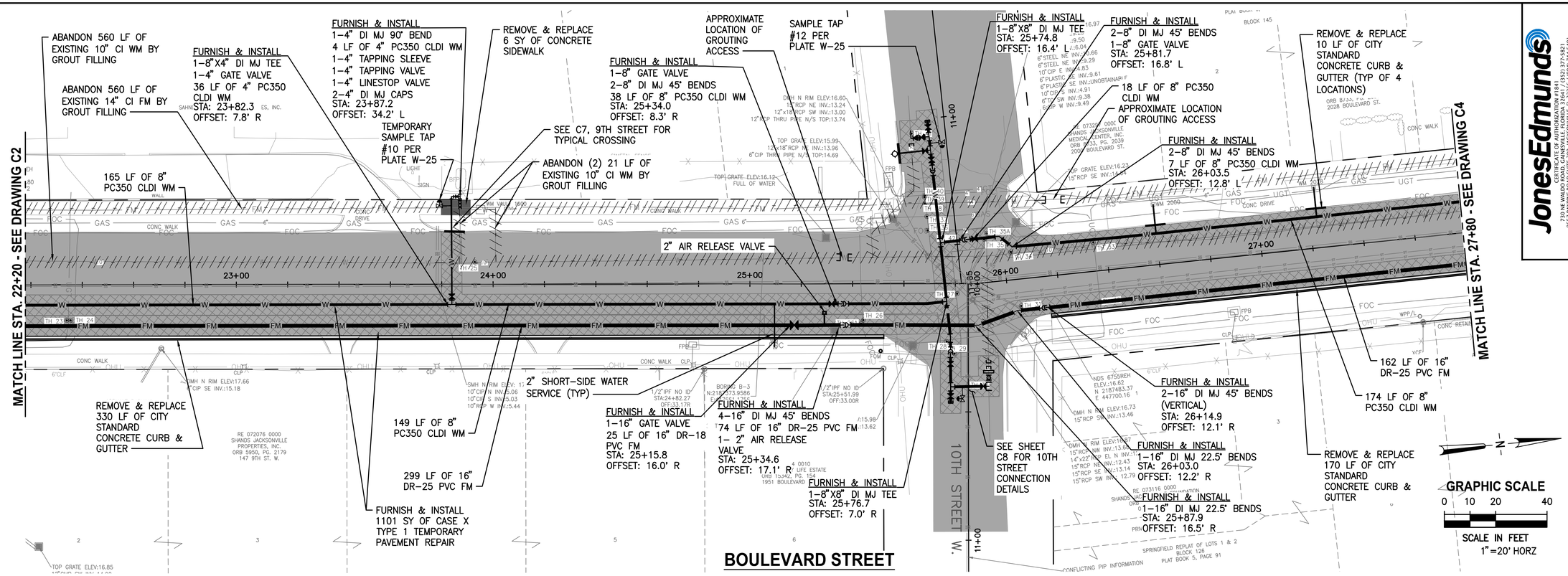

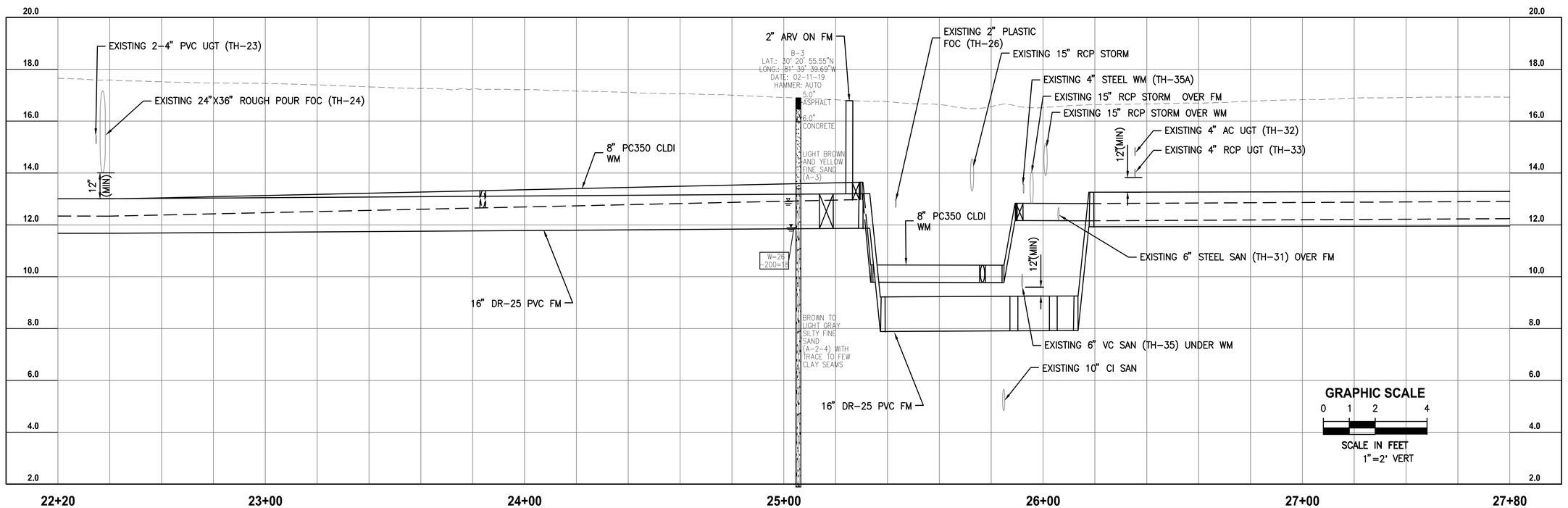

JonesEdmunds
CERTIFICATE OF AUTHORIZATION #1841
239 NE WALDO ROAD, GAINESVILLE, FL 32641 / (352) 377-5821
8657 BAYPINE ROAD SUITE 300, JACKSONVILLE, FL 32256 / (904) 744-5401

NO.	BY	DATE	REVISIONS
6.			
5.			
4.			
3.			
2.			
1.			

DESIGNER: KFRASER
DRAWN BY: RWADE
DATE: MARCH 30, 2020
CHECKED BY: HBRIDGES
DATE: MARCH 30, 2020

DESIGN ENGINEER
KENNETH A. FRASER, PE
FLORIDA REGISTRATION NO. 57452

JEA Building Community sm

BOULEVARD FORCE MAIN AND WATER MAIN REPLACEMENT PLAN AND PROFILE

PROJ. NO. 09302-055-01
DATE: MARCH 30, 2020
SCALE: 1"=20'H 1"=2'V

NO. SHEETS 35
SHEET NO. 7
DRAWING NO. C3

Xrefs Attached= XR055-G-TBPP [Y:\09302-JEA\Projects\055-01 BOULEVARD FM & WM REPLACEMENT\CAD\Dwgs\Xref\general\XR055-G-TBPP.dwg]
XR055-C-DESIGN [Y:\09302-JEA\Projects\055-01 BOULEVARD FM & WM REPLACEMENT\CAD\Dwgs\Xref\civil\XR055-C-DESIGN.dwg]
XR055-C-KEYMAP [Y:\09302-JEA\Projects\055-01 BOULEVARD FM & WM REPLACEMENT\CAD\Dwgs\Xref\civil\XR055-C-KEYMAP.dwg]
XR055-C-Survey [Y:\09302-JEA\Projects\055-01 BOULEVARD FM & WM REPLACEMENT\CAD\Dwgs\Xref\civil\XR055-C-Survey.dwg]
XR055-C-Profile [Y:\09302-JEA\Projects\055-01 BOULEVARD FM & WM REPLACEMENT\CAD\Dwgs\Xref\civil\XR055-C-Profile.dwg]
XR055-C-HATCH [..\Xref\civil\XR055-C-HATCH.dwg]
Y:\09302-jea\Projects\055-01 boulevard fm & wm replacement\CAD\Dwgs\Civil\09302055501-C03.dwg Current Layout Tab = C3 Fri Mar 27, 2020 - 15:55

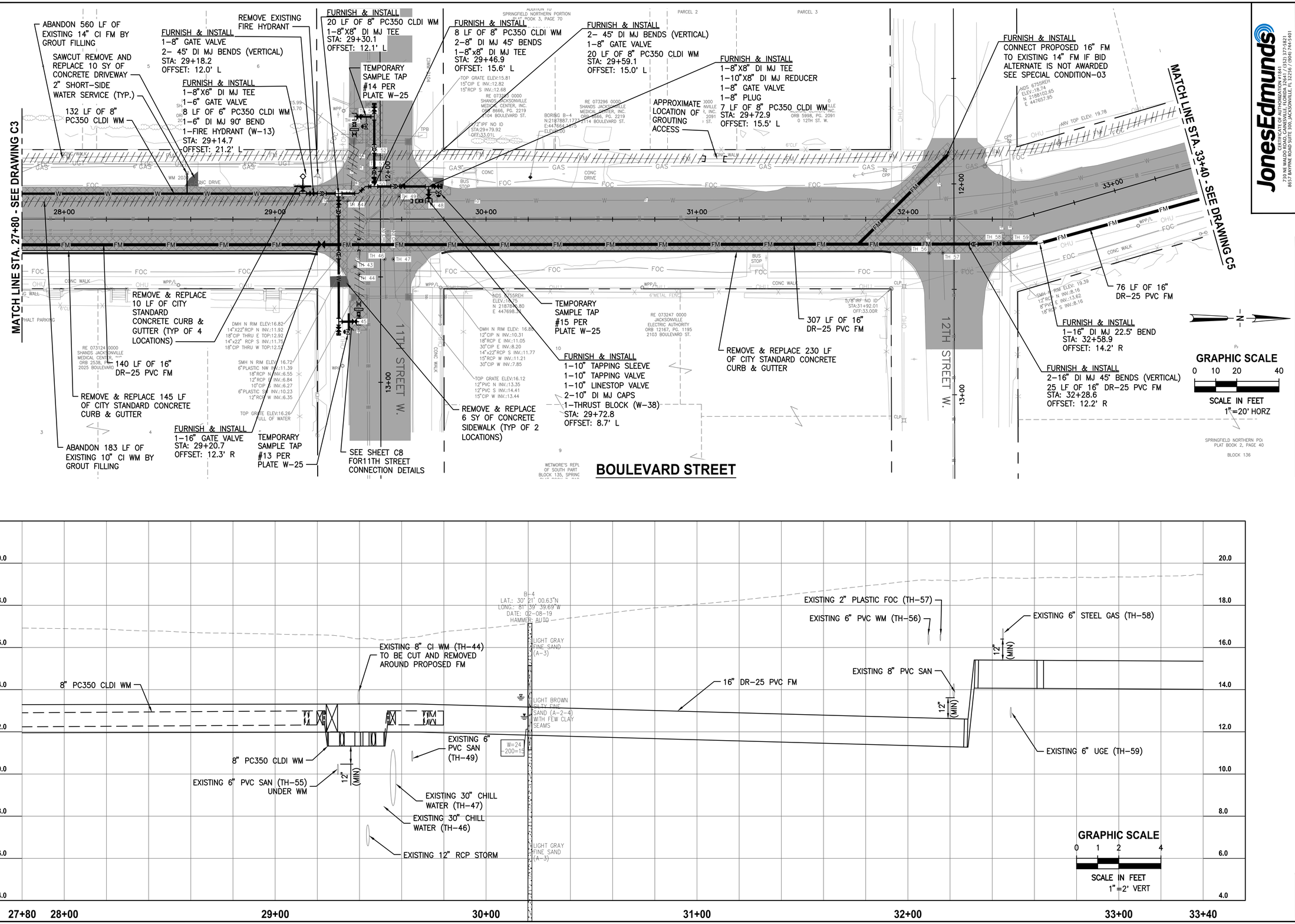

JonesEdmunds
CERTIFICATE OF AUTHORIZATION #1841
239 NE WALDO ROAD SUITE 100, GAINESVILLE, FL 32641 / (352) 377-5821
8657 BAYPINE ROAD SUITE 300, JACKSONVILLE, FL 32256 / (904) 744-5401

NO.	BY	DATE	REVISIONS
6.			
5.			
4.			
3.			
2.			
1.			

DESIGN ENGINEER: KENNETH A. FRASER, PE
FLORIDA REGISTRATION NO. 57452

DESIGNED:	KFRASER
DRAWN BY:	RWADE
DATE:	MARCH 30, 2020
CHECKED BY:	HBRIDGES
DATE:	MARCH 30, 2020

JEA Building Community sm

BOULEVARD FORCE MAIN AND WATER MAIN REPLACEMENT
PLAN AND PROFILE

PROJ. NO.	09302-055-01
DATE:	MARCH 30, 2020
SCALE:	1"=20'H 1"=2'V

NO. SHEETS	35
SHEET NO.	8
DRAWING NO.	C4

Xrefs Attached= XR055-G-TBPP [\\Trapan01\panclients\09302-JEA\Projects\055-01 BOULEVARD FM & WM REPLACEMENT\CAD\Dwgs\Xref\general\XR055-G-TBPP.dwg]
XR055-C-DESIGN [Y:\09302-JEA\Projects\055-01 BOULEVARD FM & WM REPLACEMENT\CAD\Dwgs\Xref\civil\XR055-C-DESIGN.dwg]
XR055-C-KEYMAP [Y:\09302-JEA\Projects\055-01 BOULEVARD FM & WM REPLACEMENT\CAD\Dwgs\Xref\civil\XR055-C-KEYMAP.dwg]
XR055-C-Survey [Y:\09302-JEA\Projects\055-01 BOULEVARD FM & WM REPLACEMENT\CAD\Dwgs\Xref\civil\XR055-C-Survey.dwg]
XR055-C-Profile [Y:\09302-JEA\Projects\055-01 BOULEVARD FM & WM REPLACEMENT\CAD\Dwgs\Xref\civil\XR055-C-Profile.dwg]
XR055-C-HATCH [Y:\09302-jea\Projects\055-01 boulevard fm & wm replacement\CAD\Dwgs\Xref\civil\XR055-C-HATCH.dwg]
Y:\09302-jea\Projects\055-01 boulevard fm & wm replacement\CAD\Dwgs\Civil\0930205501-C04.dwg Current Layout Tab = C4 Mon Mar 30, 2020 - 16:53

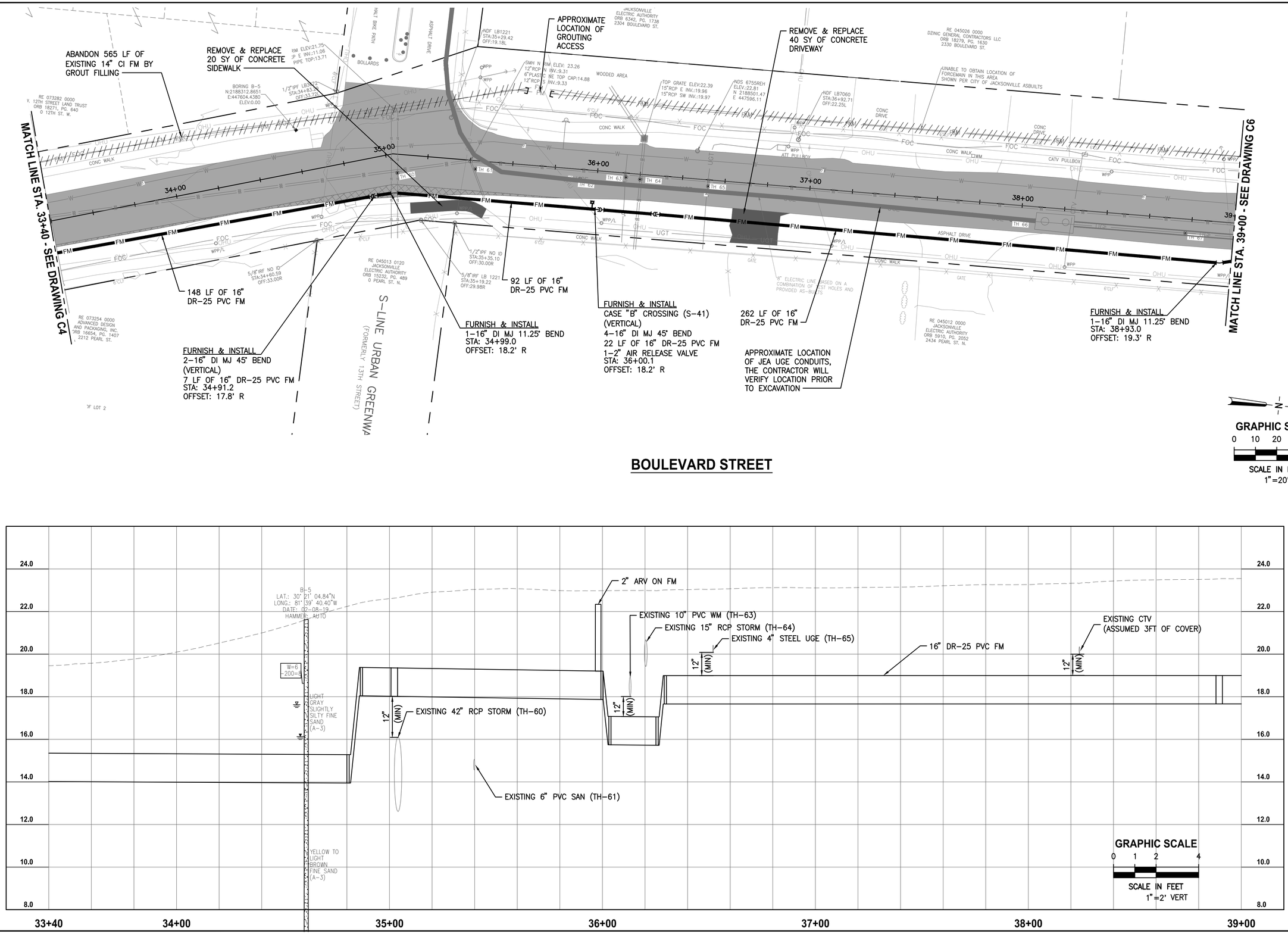

JonesEdmunds
CERTIFICATE OF AUTHORIZATION #1841
CERTIFICATE OF AUTHORIZATION #1841
239 NE WALDO ROAD, GAINESVILLE, FL 32641 / (352) 377-5821
8657 BAYPINE ROAD SUITE 300, JACKSONVILLE, FL 32256 / (904) 744-5401

NO.	BY	DATE	REVISIONS
6.			
5.			
4.			
3.			
2.			
1.			

DESIGNER: KFRASER
DRAWN BY: RWADE
DATE: MARCH 30, 2020
CHECKED BY: HBRIDGES
DATE: MARCH 30, 2020

DESIGN ENGINEER
KENNETH A. FRASER, PE
FLORIDA REGISTRATION NO.
57452

JEA
Building Community sm

BOULEVARD FORCE MAIN AND WATER MAIN REPLACEMENT
PLAN AND PROFILE

NO. SHEETS 35
SHEET NO. 9
DRAWING NO. C5

PROJ. NO. 09302-055-01
DATE: MARCH 30, 2020
SCALE: 1"=20'H 1"=2'V

Xrefs Attached= XR055-G-TBPP [\\Trapan01\panclients\09302-JEA\Projects\055-01 BOULEVARD FM & WM REPLACEMENT\CAD\Dwgs\Xref\general\XR055-G-TBPP.dwg]
XR055-C-DESIGN [Y:\09302-JEA\Projects\055-01 BOULEVARD FM & WM REPLACEMENT\CAD\Dwgs\Xref\civil\XR055-C-DESIGN.dwg]
XR055-C-KEYMAP [Y:\09302-JEA\Projects\055-01 BOULEVARD FM & WM REPLACEMENT\CAD\Dwgs\Xref\civil\XR055-C-KEYMAP.dwg]
XR055-C-Survey [Y:\09302-JEA\Projects\055-01 BOULEVARD FM & WM REPLACEMENT\CAD\Dwgs\Xref\civil\XR055-C-Survey.dwg]
XR055-C-Profile [Y:\09302-JEA\Projects\055-01 BOULEVARD FM & WM REPLACEMENT\CAD\Dwgs\Xref\civil\XR055-C-Profile.dwg]
XR055-C-HATCH [..\Xref\civil\XR055-C-HATCH.dwg]
Y:\09302-jea\Projects\055-01 boulevard fm & wm replacement\CAD\Dwgs\Civil\09302055501-C05.dwg Current Layout Tab = C5 Fri Mar 27, 2020 - 15:56

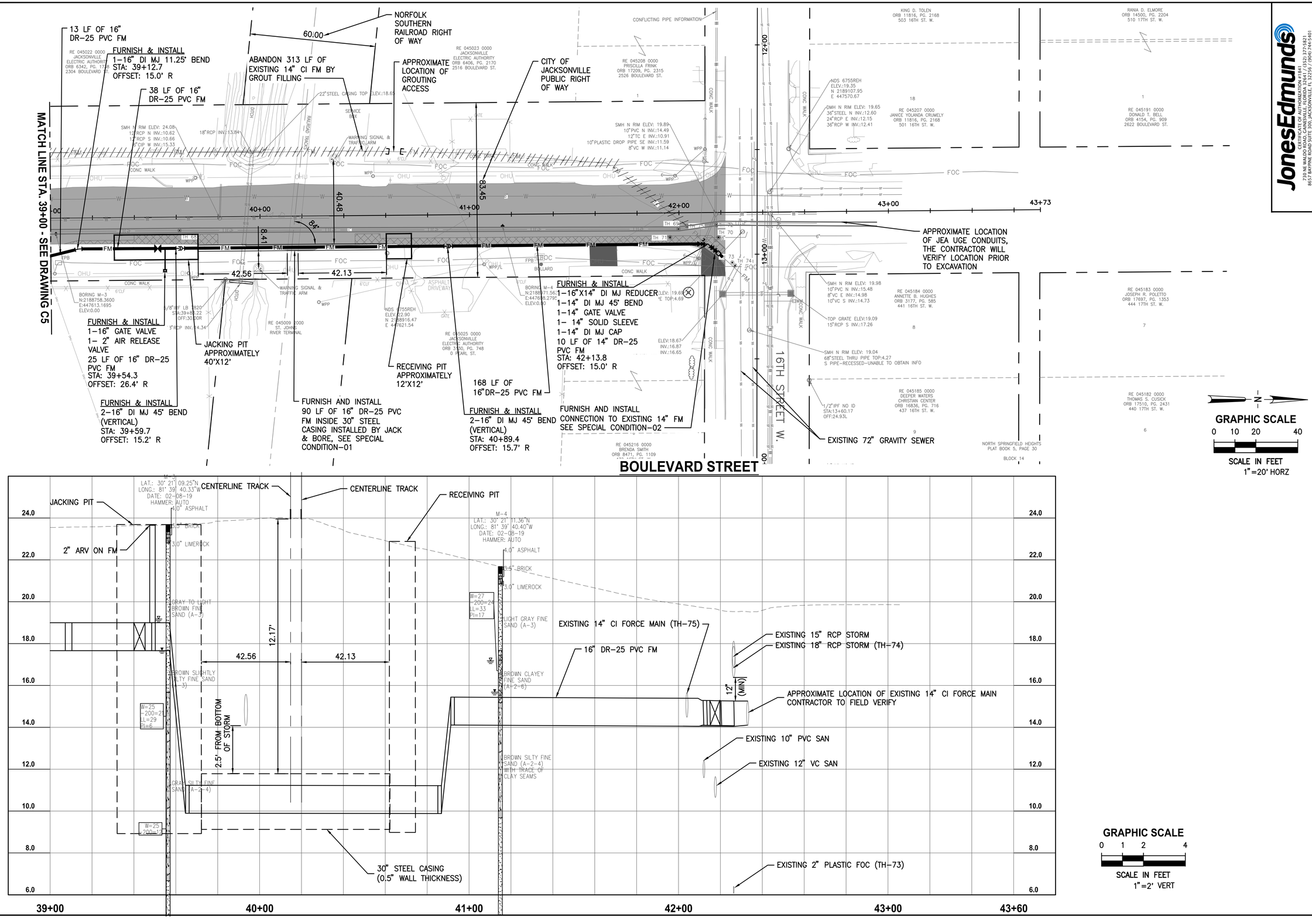

JonesEdmunds
CERTIFICATE OF AUTHORIZATION #1841
739 NE WALDO ROAD, GAINESVILLE, FL 32641 / (352) 377-5821
8657 BAYPINE ROAD SUITE 300, JACKSONVILLE, FL 32256 / (904) 744-5401

NO.	BY	DATE	REVISIONS
6.			
5.			
4.			
3.			
2.			
1.			

DESIGN ENGINEER: KENNETH A. FRASER, PE
FLORIDA REGISTRATION NO. 57452

DESIGNED: KFRASER
DRAWN BY: RWADE
DATE: MARCH 30, 2020
CHECKED BY: HBRIDGES
DATE: MARCH 30, 2020

JEA Building Community sm

BOULEVARD FORCE MAIN AND WATER MAIN REPLACEMENT
PLAN AND PROFILE

PROJ. NO. 09302-055-01
DATE: MARCH 30, 2020
SCALE: 1"=20'H 1"=2'V

NO. SHEETS 35
SHEET NO. 10
DRAWING NO. C6

Xrefs Attached= XR055-G-TBPP [Y:\09302-jea\Projects\055-01 boulevard fm & wm replacement\CAD\Dwgs\Civil\0930205501-C06.dwg Current Layout Tab = C6 Thu Apr 02, 2020 - 14:34]
XR055-C-DESIGN [Y:\09302-JEA\Projects\055-01 BOULEVARD FM & WM REPLACEMENT\CAD\Dwgs\Xref\civil\XR055-C-DESIGN.dwg]
XR055-C-KEYMAP [Y:\09302-JEA\Projects\055-01 BOULEVARD FM & WM REPLACEMENT\CAD\Dwgs\Xref\civil\XR055-C-KEYMAP.dwg]
XR055-C-Survey [Y:\09302-JEA\Projects\055-01 BOULEVARD FM & WM REPLACEMENT\CAD\Dwgs\Xref\civil\XR055-C-Survey.dwg]
XR055-C-Profile [Y:\09302-JEA\Projects\055-01 BOULEVARD FM & WM REPLACEMENT\CAD\Dwgs\Xref\civil\XR055-C-Profile.dwg]
XR055-C-HATCH [Y:\09302-jea\Projects\055-01 boulevard fm & wm replacement\CAD\Dwgs\Xref\civil\XR055-C-HATCH.dwg]
Y:\09302-jea\Projects\055-01 boulevard fm & wm replacement\CAD\Dwgs\Civil\0930205501-C06.dwg

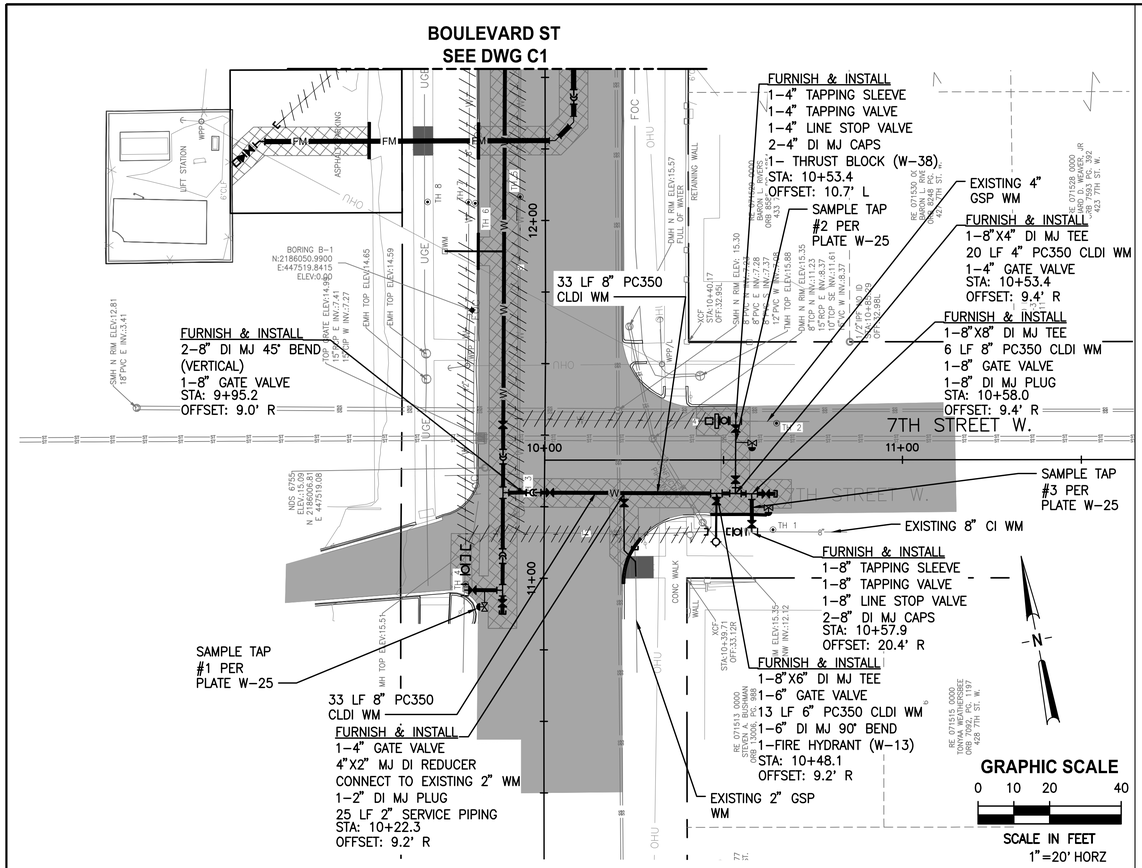

7TH STREET

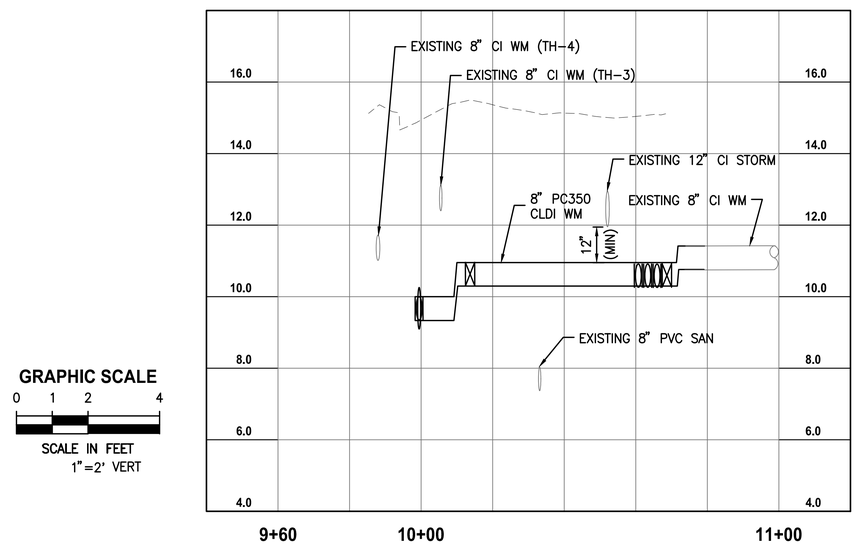

GRAPHIC SCALE
0 1 2 4
SCALE IN FEET
1"=2' VERT

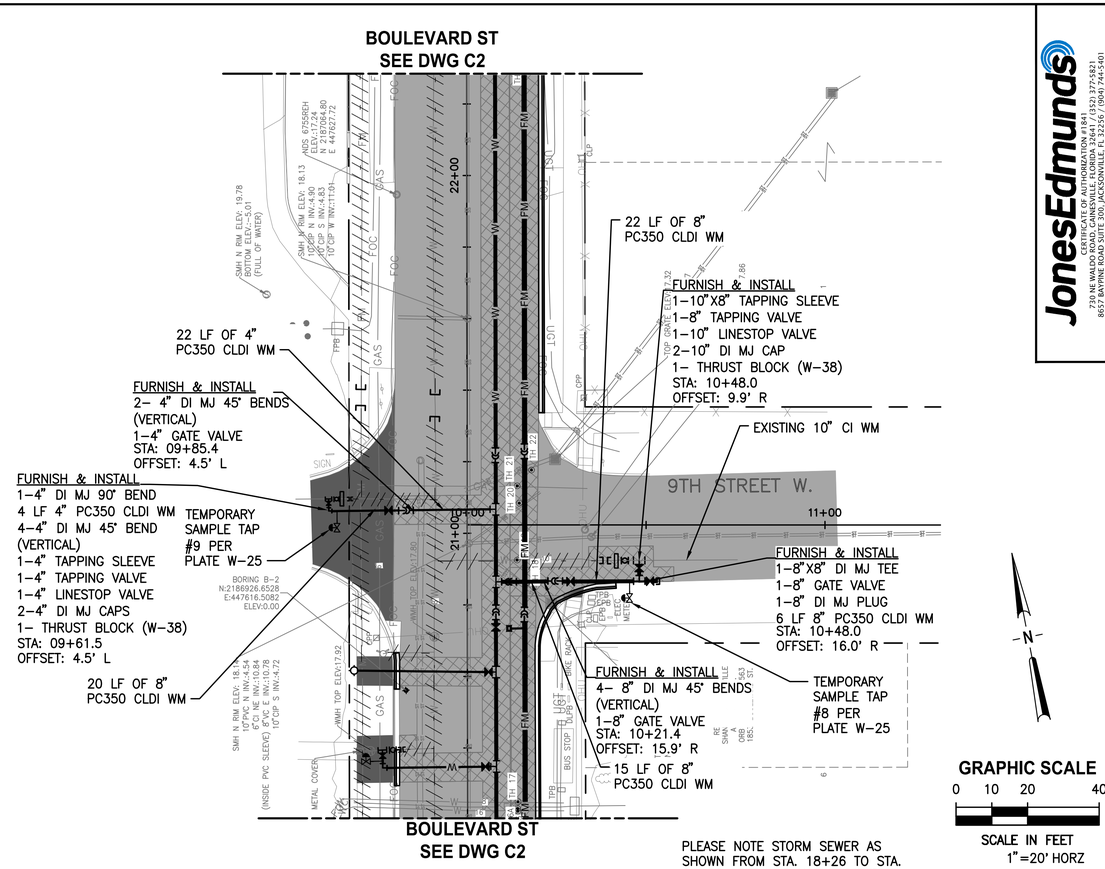

PLEASE NOTE STORM SEWER AS SHOWN FROM STA. 18+26 TO STA. 21+20 LEFT WAS NOT LOCATED IN SURVEY. LOCATION IS BASED ON AS–BUILTS

9TH STREET

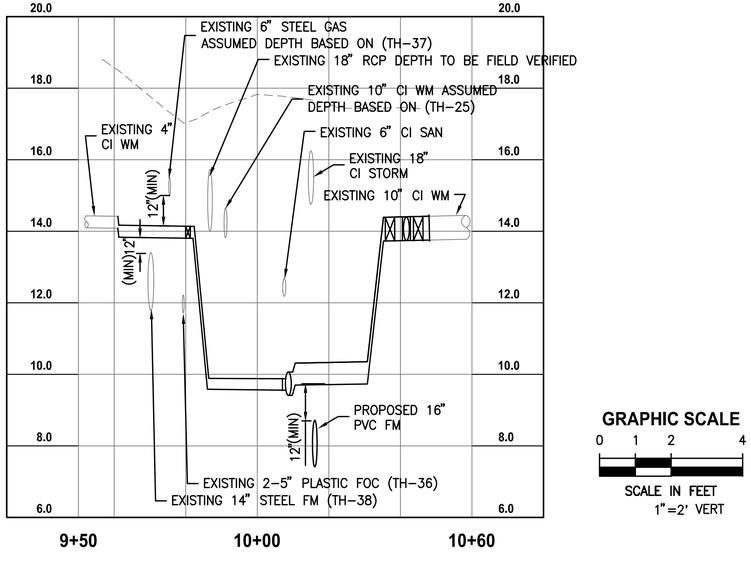

GRAPHIC SCALE
0 1 2 4
SCALE IN FEET
1"=2' VERT

JonesEdmunds
CERTIFICATE OF AUTHORIZATION #1841
(800) 749-1422 / (352) 377-5821
8657 BAYPINE ROAD SUITE 300, JACKSONVILLE, FL 32256 / (904) 744-5401

NO.	BY	DATE	REVISIONS
6.			
5.			
4.			
3.			
2.			
1.			

DESIGNER: KFRASER
DRAWN BY: RWADE
DATE: MARCH 30, 2020
CHECKED BY: HBRIDGES
DATE: MARCH 30, 2020

DESIGN ENGINEER
KENNETH A. FRASER, PE
FLORIDA REGISTRATION NO.
57452

JEA
Building Community sm

BOULEVARD FORCE MAIN AND WATER MAIN REPLACEMENT PLAN AND PROFILE

PROJ. NO. 09302-055-01
DATE: MARCH 30, 2020
SCALE: 1"-20'H 1"-2'V

NO. SHEETS 35
SHEET NO. 11
DRAWING NO. C7

Xrefs Attached= XR055-C-TBPP [Y:\09302-jea\Projects\055-01 boulevard fm & wm replacement\CAD\Dwgs\Civil\0930205501-C07.dwg Current Layout Tab = C1 Fri Mar 27, 2020 - 15:57
XR055-C-DESIGN [Y:\09302-JEA\Projects\055-01 BOULEVARD FM & WM REPLACEMENT\CAD\Dwgs\Xref\civil\XR055-C-DESIGN.dwg]
XR055-C-KEYMAP [Y:\09302-JEA\Projects\055-01 BOULEVARD FM & WM REPLACEMENT\CAD\Dwgs\Xref\civil\XR055-C-KEYMAP.dwg]
XR055-C-Survey [Y:\09302-JEA\Projects\055-01 BOULEVARD FM & WM REPLACEMENT\CAD\Dwgs\Xref\civil\XR055-C-Survey.dwg]
XR055-C-Profile [Y:\09302-JEA\Projects\055-01 BOULEVARD FM & WM REPLACEMENT\CAD\Dwgs\Xref\civil\XR055-C-Profile.dwg]
XR055-C-HATCH [..\Xref\civil\XR055-C-HATCH.dwg]
Y:\09302-jea\Projects\055-01 boulevard fm & wm replacement\CAD\Dwgs\Civil\0930205501-C07.dwg
XRefs Attached= XR055-C-TBPP [T:\Tapan01\panclients\09302-JEA\Projects\055-01 BOULEVARD FM & WM REPLACEMENT\CAD\Dwgs\Xref\general\XR055-C-TBPP.dwg]

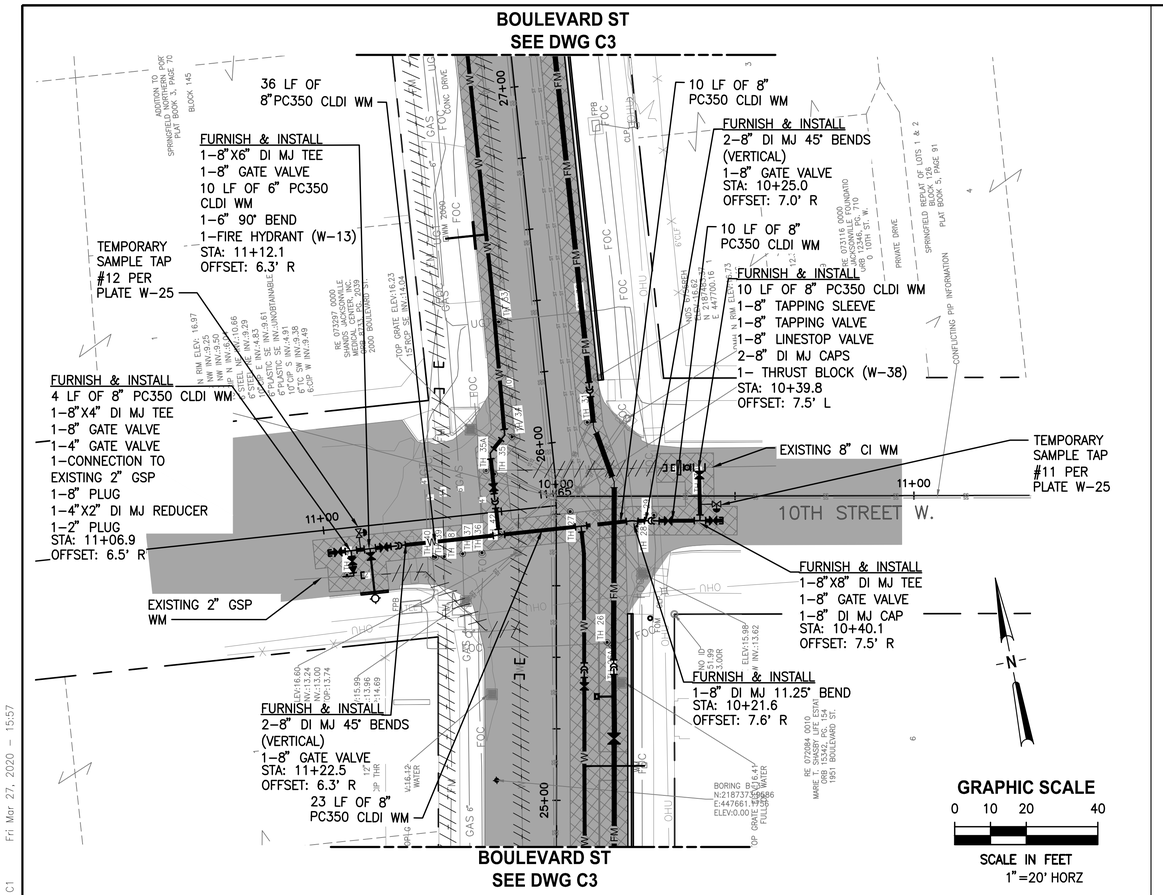

10TH STREET

GRAPHIC SCALE
0 1 2 4
SCALE IN FEET
1"=2' VERT

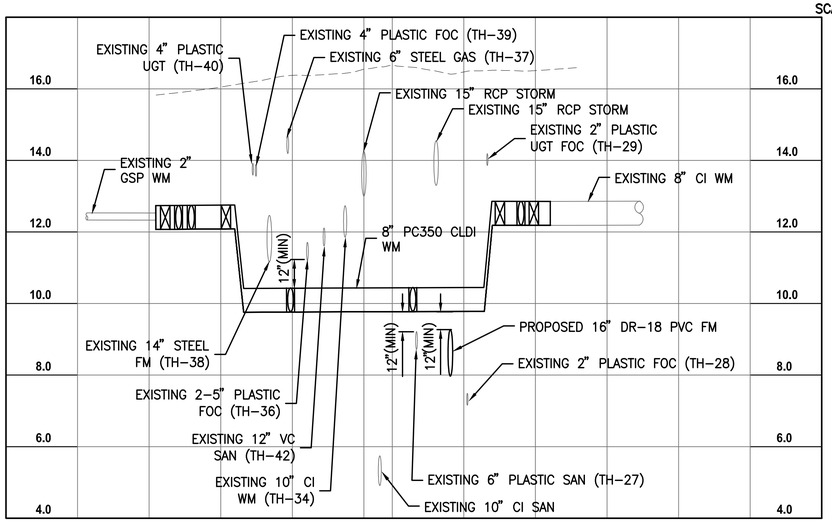

11TH STREET

GRAPHIC SCALE
0 1 2 4
SCALE IN FEET
1"=2' VERT

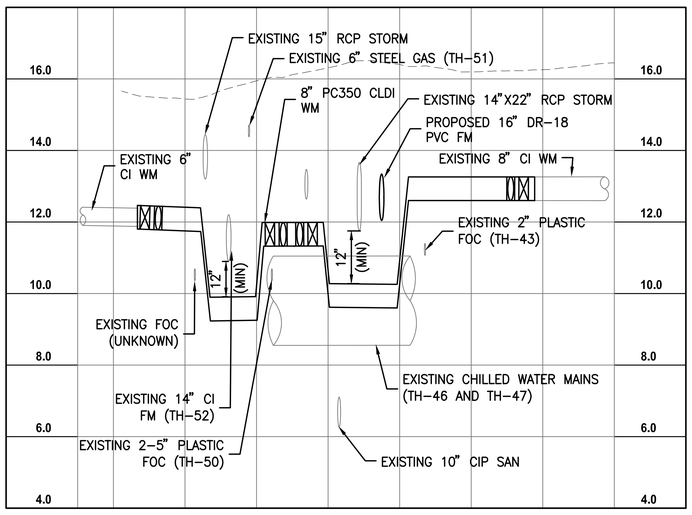

JonesEdmunds
CERTIFICATE OF AUTHORIZATION #1841
239 NE WALDO ROAD, GAINESVILLE, FL 32641 / (352) 377-5821
8657 BAYPINE ROAD SUITE 300, JACKSONVILLE, FL 32256 / (904) 744-5401

NO.	BY	DATE	REVISIONS
6.			
5.			
4.			
3.			
2.			
1.			

DESIGNER: KFRASER
DRAWN BY: RWADE
DATE: MARCH 30, 2020
CHECKED BY: HBRIDGES
DATE: MARCH 30, 2020

DESIGN ENGINEER
KENNETH A. FRASER, PE
FLORIDA REGISTRATION NO.
57452

JEA Building Community sm

BOULEVARD FORCE MAIN AND WATER MAIN REPLACEMENT
PLAN AND PROFILE

PROJ. NO. 09302-055-01
DATE: MARCH 30, 2020
SCALE: 1"-20'H 1"-2'V

NO. SHEETS 35
SHEET NO. 12
DRAWING NO. C8

Xrefs Attached= XR055-G-TBPP [Y:\09302-JEA\Projects\055-01 BOULEVARD FM & WM REPLACEMENT\CAD\Dwgs\Xref\general\XR055-G-TBPP.dwg]
XR055-C-DESIGN [Y:\09302-JEA\Projects\055-01 BOULEVARD FM & WM REPLACEMENT\CAD\Dwgs\Xref\civil\XR055-C-DESIGN.dwg]
XR055-C-KEYMAP [Y:\09302-JEA\Projects\055-01 BOULEVARD FM & WM REPLACEMENT\CAD\Dwgs\Xref\civil\XR055-C-KEYMAP.dwg]
XR055-C-Survey [Y:\09302-JEA\Projects\055-01 BOULEVARD FM & WM REPLACEMENT\CAD\Dwgs\Xref\civil\XR055-C-Survey.dwg]
XR055-C-Profile [Y:\09302-JEA\Projects\055-01 BOULEVARD FM & WM REPLACEMENT\CAD\Dwgs\Xref\civil\XR055-C-Profile.dwg]
XR055-C-HATCH [...\Xref\civil\XR055-C-HATCH.dwg]
Y:\09302-jea\Projects\055-01 boulevard frm & wm replacement\CAD\Dwgs\Civil\09302055501-C08.dwg Fri Mar 27, 2020 - 15:57 Current Layout Tab = C1

EROSION AND SEDIMENT CONTROL NOTES

1. THE CONTRACTOR IS RESPONSIBLE FOR REMOVING SILT FROM SITE IF NOT REUSABLE ON-SITE AND ASSURING PLAN ALIGNMENT AND GRADE IN ALL DITCHES AND SWALES AT COMPLETION OF CONSTRUCTION.
2. THE SITE CONTRACTOR IS RESPONSIBLE FOR REMOVING THE TEMPORARY EROSION AND SEDIMENT CONTROL DEVICES AFTER COMPLETION OF CONSTRUCTION AND ONLY WHEN AREAS HAVE BEEN STABILIZED.
3. ADDITIONAL PROTECTION – ON-SITE PROTECTION IN ADDITION TO THE ABOVE MUST BE PROVIDED THAT WILL NOT PERMIT SILT TO LEAVE THE PROJECT CONFINES DUE TO UNSEEN CONDITIONS OR ACCIDENTS.
4. CONTRACTOR SHALL INSURE THAT ALL DRAINAGE STRUCTURES, PIPES, ETC. ARE CLEANED OUT AND WORKING PROPERLY AT TIME OF ACCEPTANCE.
5. WIRE MESH SHALL BE LAID OVER THE DROP INLET SO THAT THE WIRE EXTENDS A MINIMUM OF 1 FOOT BEYOND EACH SIDE OF THE INLET STRUCTURE. HARDWARE CLOTH OR COMPARABLE WIRE MESH WITH 1/2-INCH OPENINGS SHALL BE USED. IF MORE THAN ONE STRIP OF MESH IS NECESSARY, THE STRIPS SHALL BE OVERLAPPED.
6. FDOT NO. 1 COARSE AGGREGATE SHALL BE PLACED OVER THE WIRE MESH AS INDICATED IN D-903. THE DEPTH OF STONE SHALL BE AT LEAST 12 INCHES OVER THE ENTIRE INLET OPENING. THE STONE SHALL EXTEND BEYOND THE INLET OPENING AT LEAST 18 INCHES ON ALL SIDES.
7. IF THE STONE FILTER BECOMES CLOGGED WITH SEDIMENT SO THAT IT NO LONGER ADEQUATELY PERFORMS ITS FUNCTION, THE STONES MUST BE PULLED AWAY FROM THE INLET, CLEANED AND REPLACED.
8. BALES SHALL BE EITHER WIRE-BOUND OR STRING-TIED WITH THE BINDINGS ORIENTED AROUND THE SIDES RATHER THAN OVER AND UNDER THE BALES.
9. BALES SHALL BE PLACED LENGTHWISE IN A SINGLE ROW SURROUNDING THE INLET, WITH THE ENDS OF ADJACENT BALES PRESSED TOGETHER.
10. THE FILTER BARRIER SHALL BE ENTRENCHED AND BACKFILLED. A TRENCH SHALL BE EXCAVATED TO A MINIMUM DEPTH OF 8 INCHES. AFTER THE BALES ARE STAKED, THE EXCAVATED SOIL SHALL BE BACKFILLED AND COMPACTED AGAINST THE FILTER BARRIER.
11. EACH BALE SHALL BE SECURELY ANCHORED AND HELD IN PLACE BY AT LEAST TWO STAKES OR REBARS DRIVEN THROUGH THE BALE.
12. LOOSE STRAW SHOULD BE WEDGED BETWEEN BALES TO PREVENT WATER FROM ENTERING BETWEEN BALES.
13. STRAW BALE BARRIERS SHALL BE INSPECTED IMMEDIATELY AFTER EACH RAINFALL AND AT LEAST DAILY DURING PROLONGED RAINFALL.
14. CLOSE ATTENTION SHALL BE PAID TO THE REPAIR OF DAMAGED BALES, END RUNS AND UNDERCUTTING BENEATH BALES.
15. NECESSARY REPAIRS TO BARRIERS OR REPLACEMENT OF BALES SHALL BE ACCOMPLISHED PROMPTLY.
16. ANY SEDIMENT DEPOSITS REMAINING IN PLACE AFTER THE STRAW BALE BARRIER IS NO LONGER REQUIRED SHALL BE DRESSED TO CONFORM TO THE EXISTING GRADE, PREPARED AND SEEDED.
17. SILT FENCES AND FILTER BARRIERS SHALL BE INSPECTED IMMEDIATELY AFTER EACH RAINFALL AND AT LEAST DAILY DURING PROLONGED RAINFALL. ANY REQUIRED REPAIRS SHALL BE MADE IMMEDIATELY.
18. SHOULD THE FABRIC ON A SILT FENCE OR FILTER BARRIER DECOMPOSE OR BECOME INEFFECTIVE PRIOR TO THE END OF THE EXPECTED USABLE LIFE AND THE BARRIER STILL BE NECESSARY, THE FABRIC SHALL BE REPLACED PROMPTLY.
19. SEDIMENT DEPOSITS SHOULD BE REMOVED AFTER EACH STORM EVENT. THEY MUST BE REMOVED WHEN DEPOSITS REACH APPROXIMATELY ONE-THIRD THE HEIGHT OF THE BARRIER.
20. ANY SEDIMENT DEPOSITS REMAINING IN PLACE AFTER THE SILT FENCE OR FILTER BARRIER IS NO LONGER REQUIRED SHALL BE DRESSED TO CONFORM WITH THE EXISTING GRADE, PREPARED AND SEEDED.
21. THE STRUCTURE SHALL BE INSPECTED AFTER EACH RAIN AND REPAIRS MADE AS NEEDED.
22. SEDIMENT SHALL BE REMOVED AND THE TRAP RESTORED TO ITS ORIGINAL DIMENSIONS WHEN THE SEDIMENT HAS ACCUMULATED TO 1/3 THE DESIGN DEPTH OF THE TRAP. REMOVED SEDIMENT SHALL BE DEPOSITED IN A SUITABLE AREA AND IN SUCH A MANNER THAT IT WILL NOT ERODE.
23. THE CONTRACTOR IS RESPONSIBLE FOR FOLLOWING THE BEST EROSION AND SEDIMENT CONTROL PRACTICES AS OUTLINED IN THE PLANS, SPECIFICATIONS AND ST. JOHNS RIVER WATER MANAGEMENT DISTRICT SPECIFICATIONS AND CRITERIA.
24. FOR ADDITIONAL INFORMATION ON SEDIMENT AND EROSION CONTROL REFER TO "THE FLORIDA DEVELOPMENT MANUAL – A GUIDE TO SOUND LAND AND WATER MANAGEMENT" FROM THE STATE OF FLORIDA DEPARTMENT OF ENVIRONMENTAL REGULATION (F.D.E.R.) CHAPTER 6.
25. EROSION AND SEDIMENT CONTROL BARRIERS SHALL BE PLACED ADJACENT TO ALL WETLAND AREAS WHERE THERE IS POTENTIAL FOR DOWNSTREAM WATER QUALITY DEGRADATION. SEE DETAIL SHEET FOR TYPICAL CONSTRUCTION.
26. ALL DISTURBED AREAS SHALL BE GRASSED, FERTILIZED, MULCHED AND MAINTAINED UNTIL A PERMANENT VEGETATIVE COVER IS ESTABLISHED.
27. SOD SHALL BE PLACED IN AREAS WHICH MAY REQUIRE IMMEDIATE EROSION PROTECTION TO ENSURE WATER QUALITY STANDARDS ARE MAINTAINED.
28. ANY DISCHARGE FROM DEWATERING ACTIVITY SHALL BE FILTERED AND CONVEYED TO THE OUTFALL IN A MANNER WHICH PREVENTS EROSION AND TRANSPORTATION OF SUSPENDED SOLIDS TO THE RECEIVING OUTFALL.
29. DEWATERING PUMPS SHALL NOT EXCEED THE CAPACITY OF THAT WHICH REQUIRES A CONSUMPTIVE USE PERMIT FROM THE ST. JOHNS RIVER WATER MANAGEMENT DISTRICT.
30. ALL DISTURBED AREAS TO BE STABILIZED THROUGH COMPACTION, SILT SCREENS, HAY BALES, AND GRASSING. ALL FILL SLOPES 3:1 OR STEEPER TO RECEIVE STAKED SOLID SOD.
31. ALL DEWATERING, EROSION, AND SEDIMENT CONTROL TO REMAIN IN PLACE AFTER COMPLETION OF CONSTRUCTION AND REMOVED ONLY WHEN AREAS HAVE STABILIZED.
32. THIS PLAN INDICATES THE MINIMUM EROSION AND SEDIMENT MEASURES REQUIRED FOR THIS PROJECT. THE CONTRACTOR IS RESPONSIBLE FOR MEETING ALL APPLICABLE RULES, REGULATIONS AND WATER QUALITY GUIDELINES AND MAY NEED TO INSTALL ADDITIONAL CONTROLS.
33. THE CONTRACTOR SHALL BE REQUIRED TO RESPOND TO ALL WATER MANAGEMENT DISTRICT INQUIRIES, RELATIVE TO COMPLIANCE OF SJRWMD FOR EROSION AND SEDIMENTATION CONTROL. THE COST OF THIS COMPLIANCE SHALL BE PART OF THE CONTRACT.

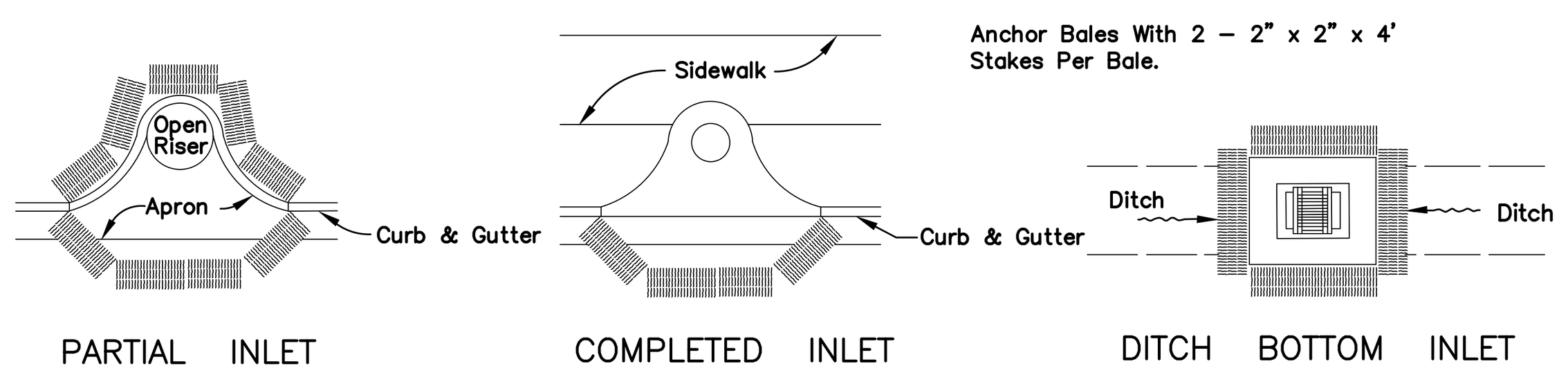

PROTECTION AROUND INLETS OR SIMILAR STRUCTURES

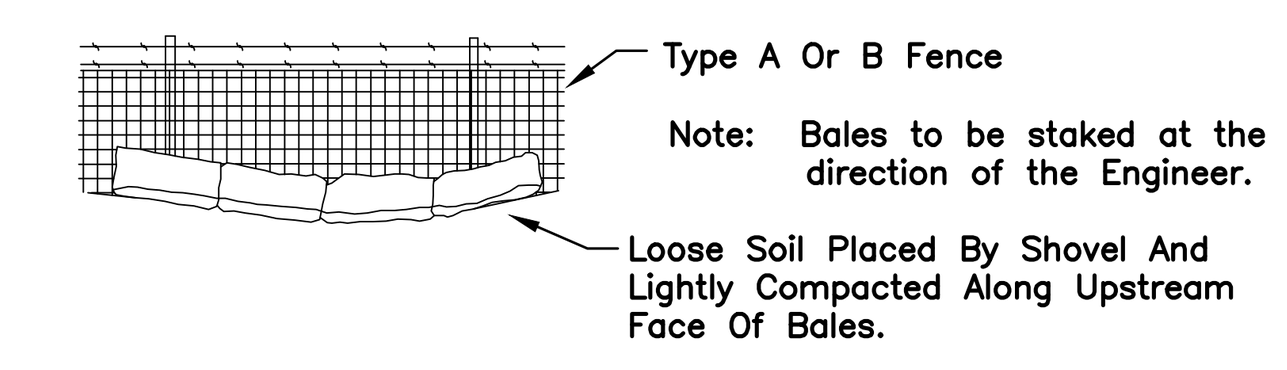

BALES BACKED BY FENCE

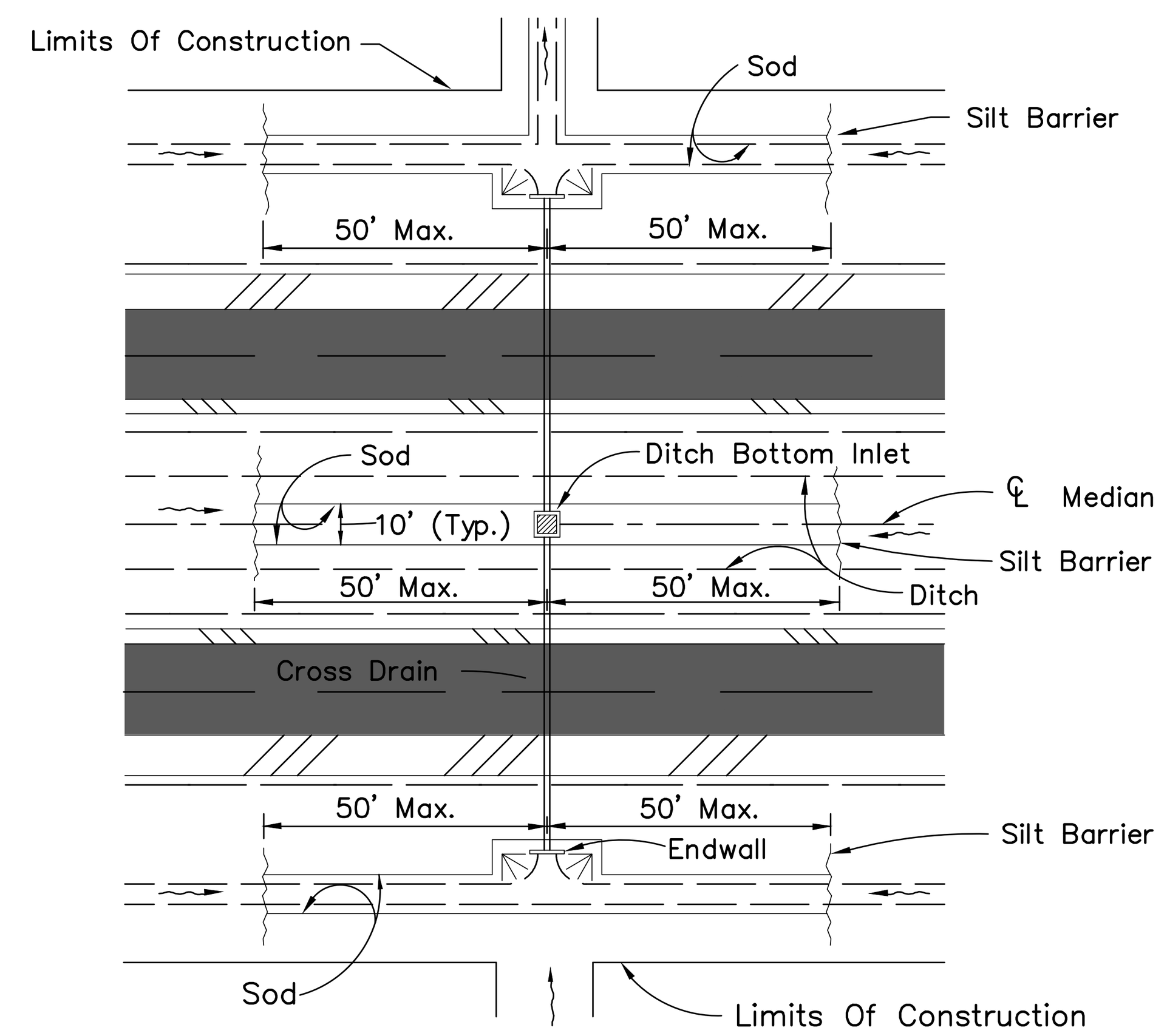

DITCH INSTALLATIONS AT DRAINAGE STRUCTURES

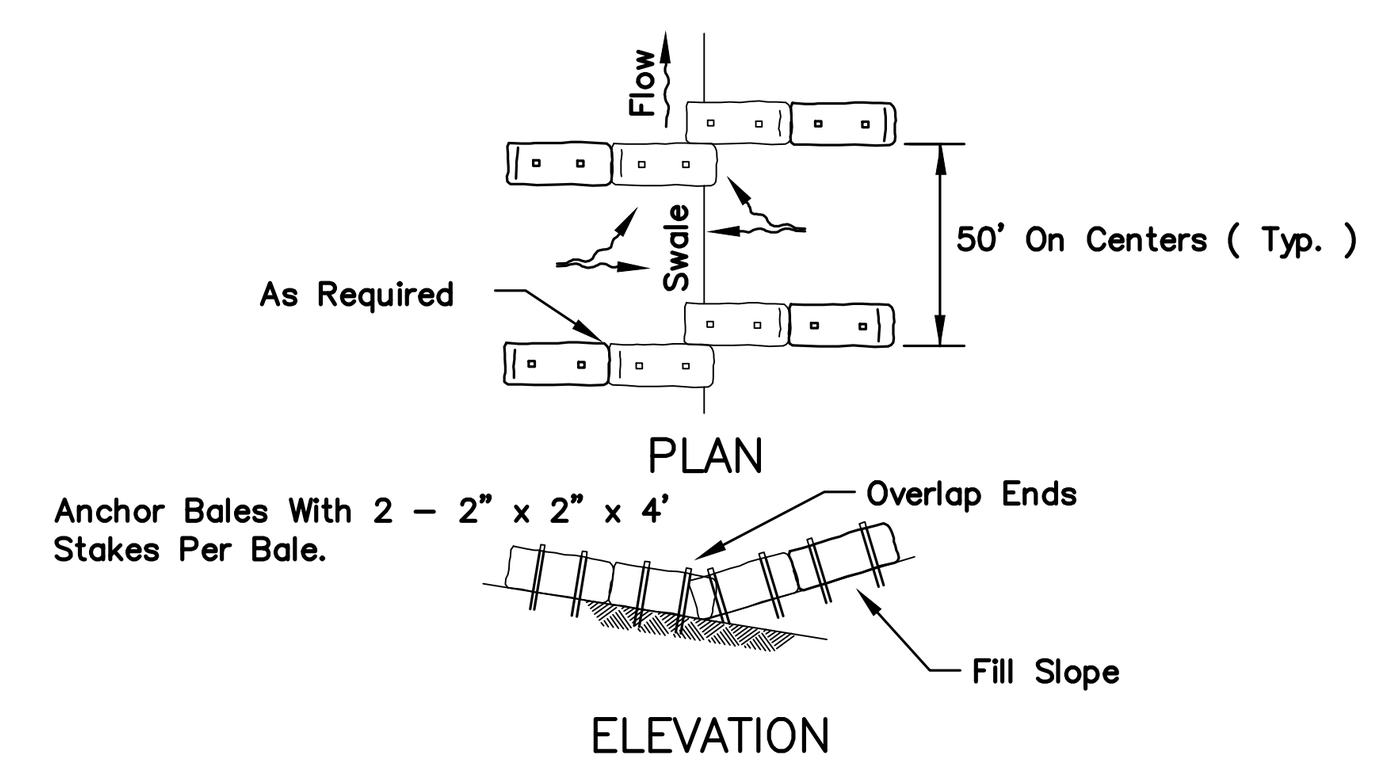

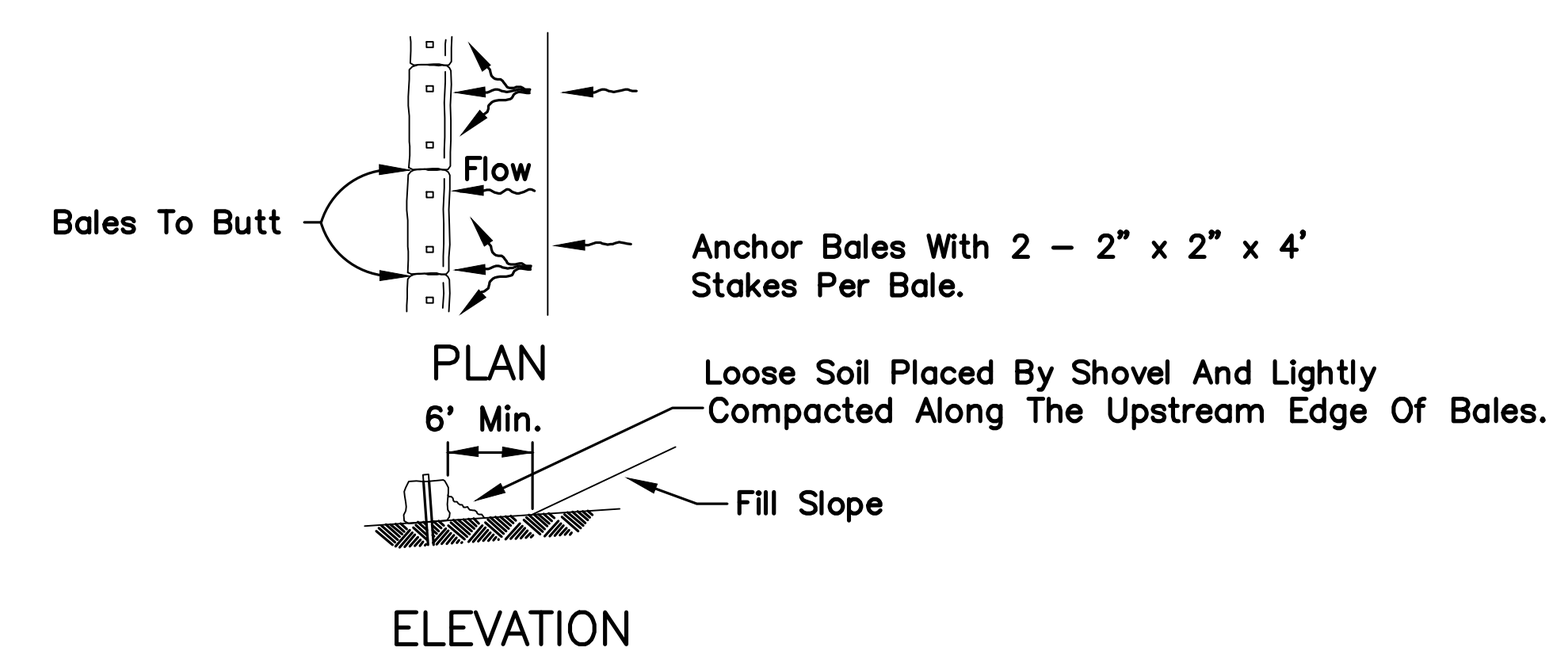

BARRIERS FOR FILL SLOPES

HAY BALE LOCATION

(D–901)
N.T.S.

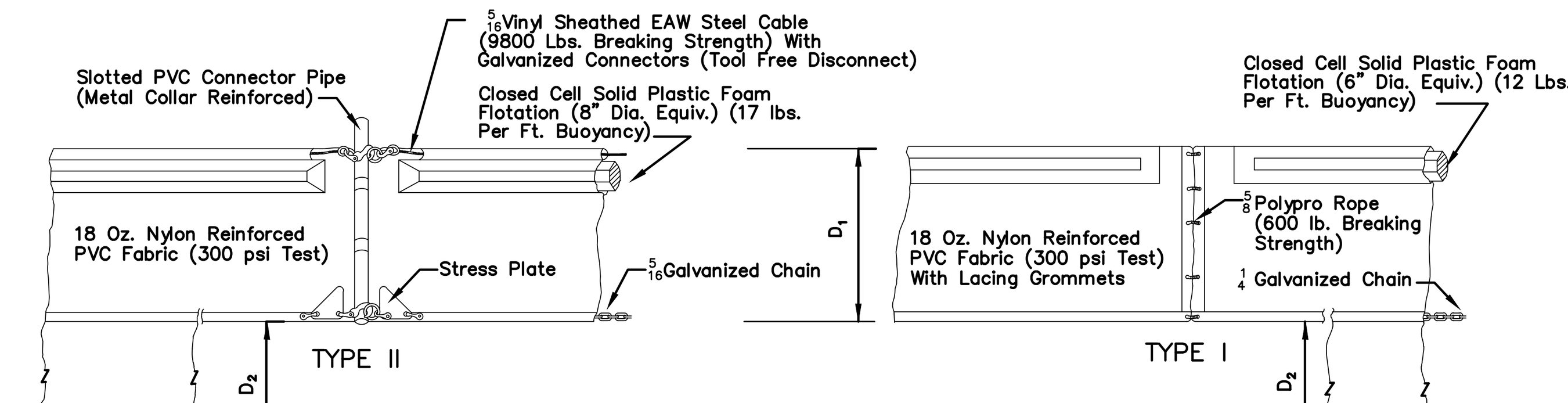

FLOATING TURBIDITY BARRIERS

NOTICE:
COMPONENTS OF TYPES I & TYPE II MAY BE SIMILAR OR IDENTICAL TO PROPRIETARY DESIGNS. ANY INFRINGEMENT ON THE PROPRIETARY RIGHTS OF THE DESIGNER SHALL BE THE SOLE RESPONSIBILITY OF THE USER. SUBSTITUTIONS FOR TYPES I AND II SHALL BE AS APPROVED BY THE ENGINEER.

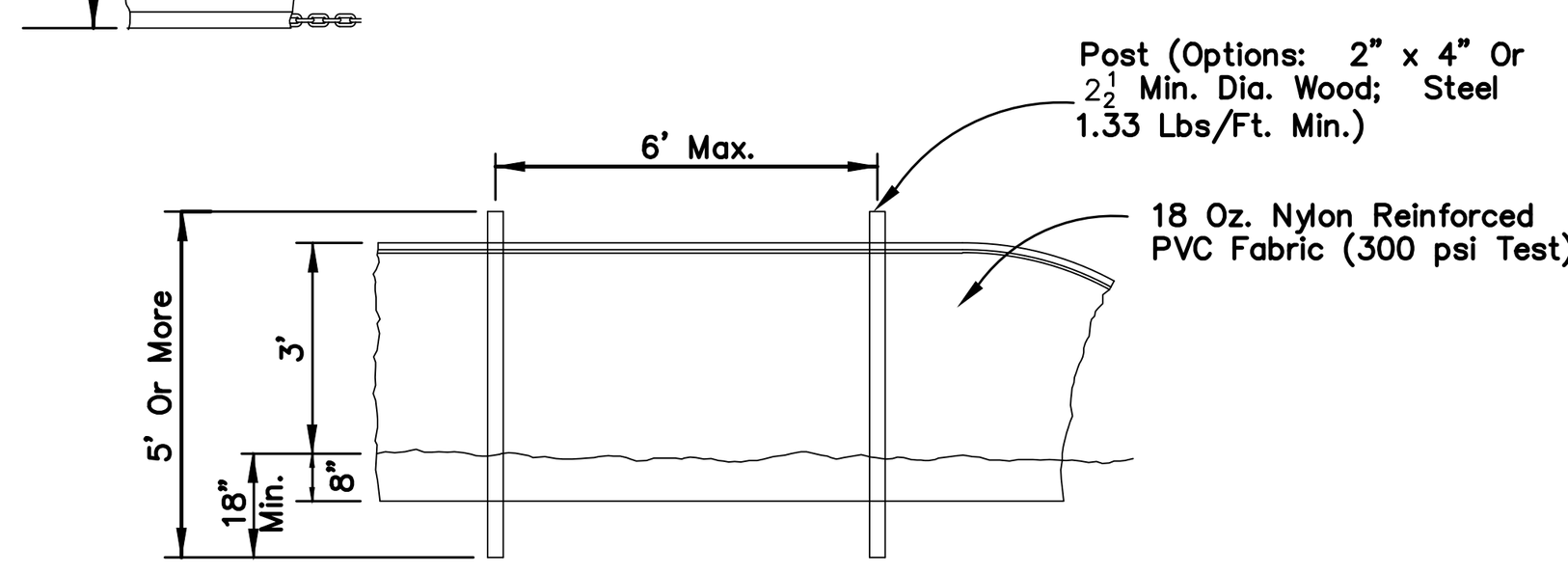

STAKED TURBIDITY BARRIER

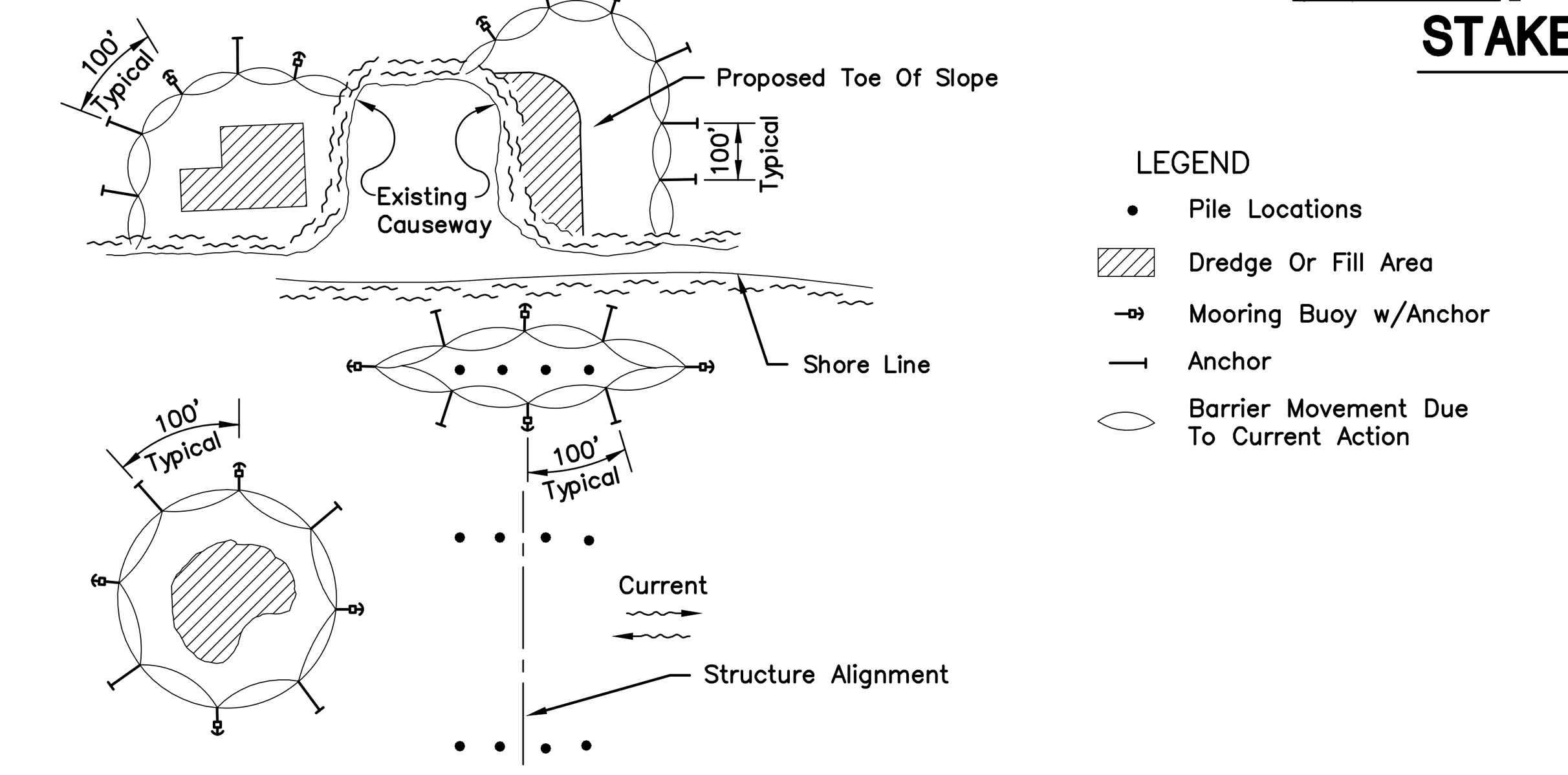

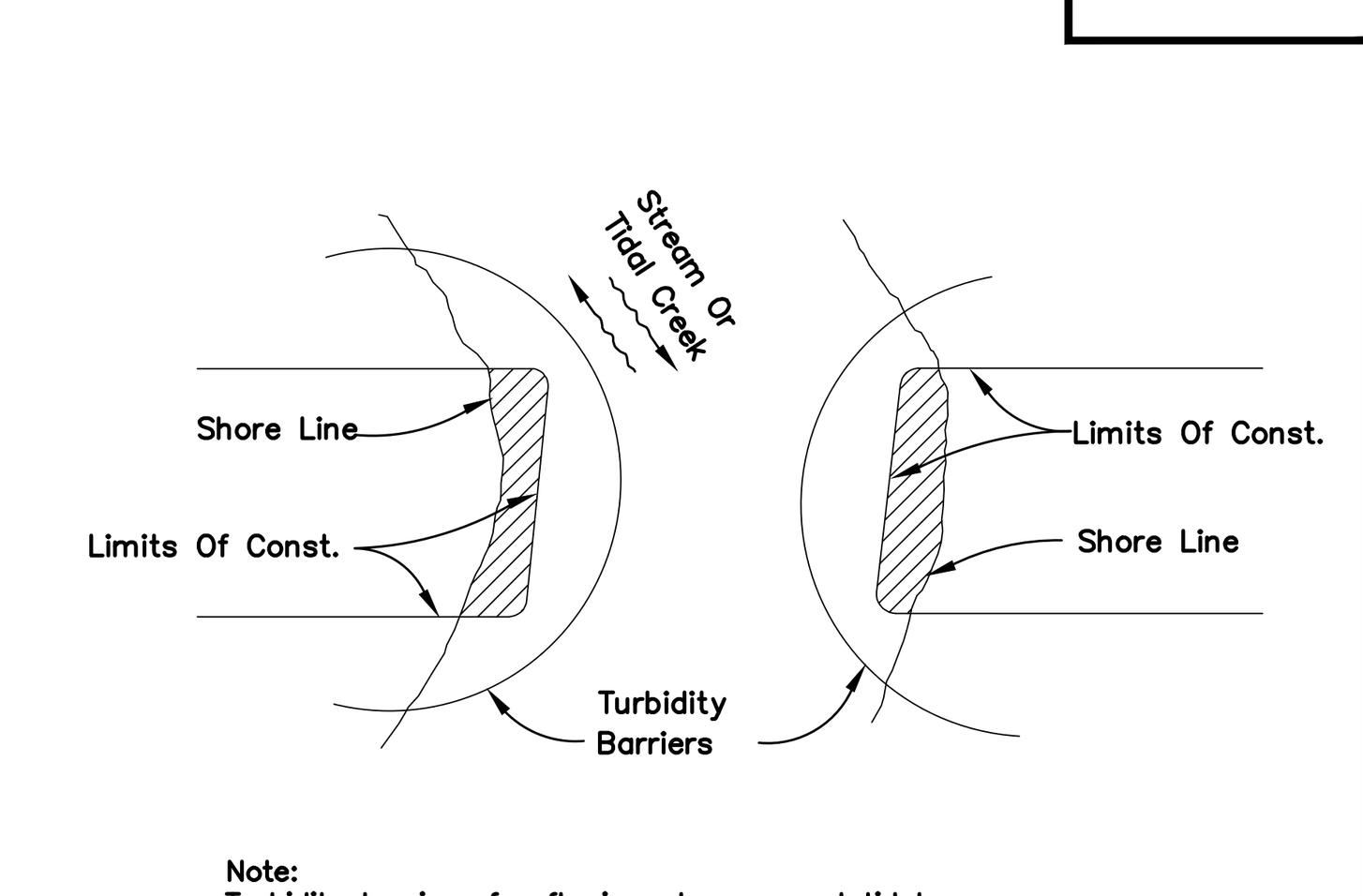

Note:
Turbidity barriers for flowing streams and tidal creeks may be either floating, or staked types or any combinations of types that will suit site conditions and meet erosion control and water quality requirements. The barrier type(s) will be at the Contractors option unless otherwise specified in the plans, however payment will be under the contract lump sum price established in the bid proposal for Erosion & Sediment Control Posts in staked turbidity barriers to be installed in vertical position unless otherwise directed by the Engineer.

NOTES:
1. Turbidity barriers are to be used in all permanent bodies of water regardless of water depth.
2. Number and spacing of anchors dependent on current velocities.
3. Deployment of barrier around pile locations may vary to accommodate construction operations.
4. Navigation may require segmenting barrier during construction operations.
5. For additional information see Section 104 of the FDOT Standard Specifications.

TURBIDITY BARRIER APPLICATIONS

TURBIDITY BARRIERS

(D–907)
N.T.S.

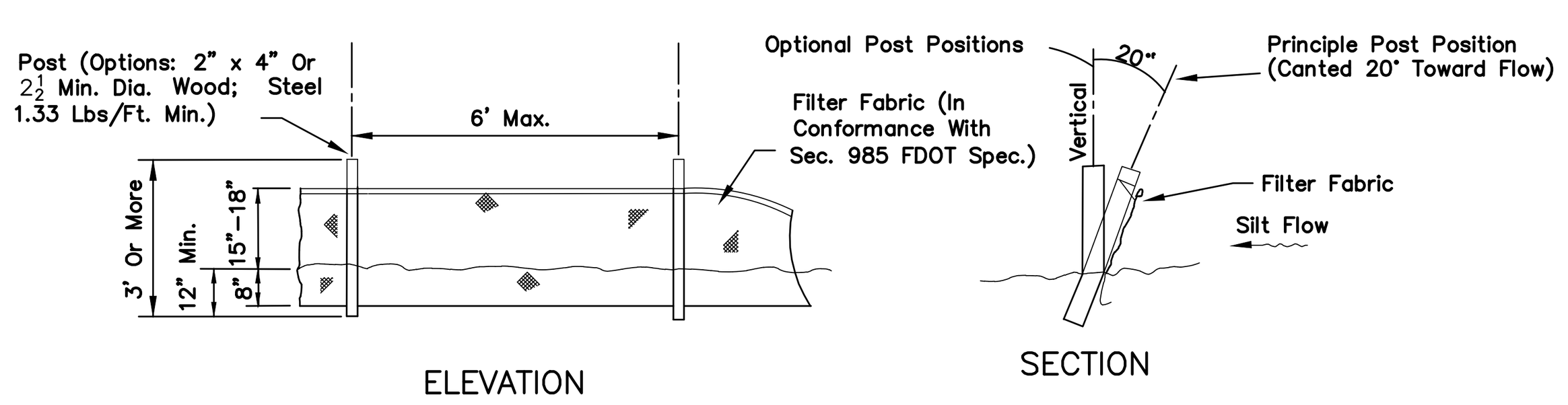

TYPE III SILT FENCE

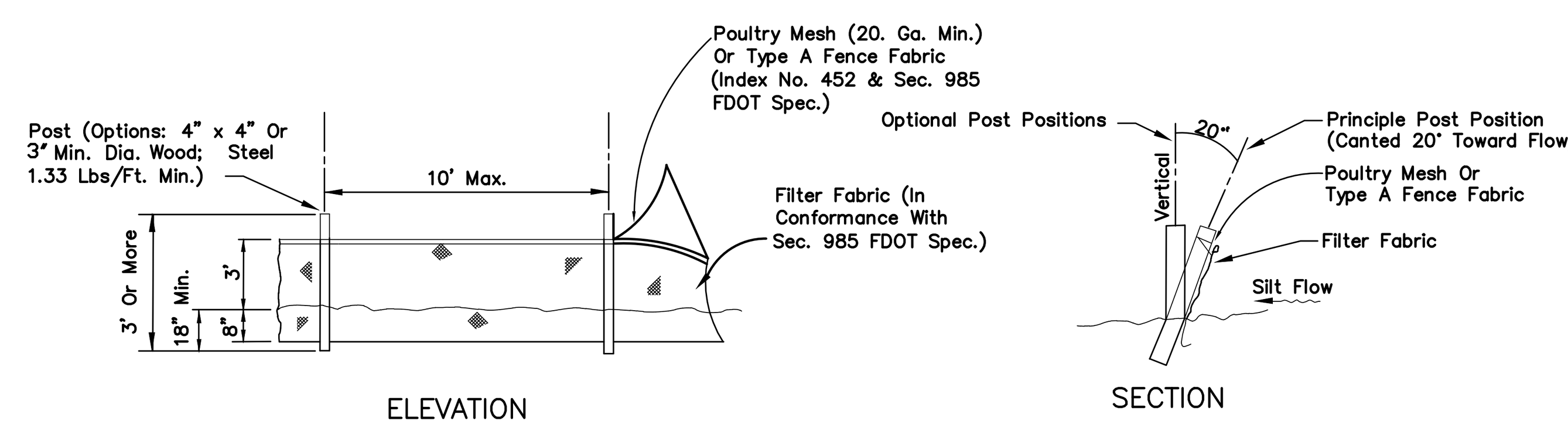

Note: Silt Fence to be paid for under the contract lump sum price for Erosion and Sediment Control.

TYPE IV SILT FENCE

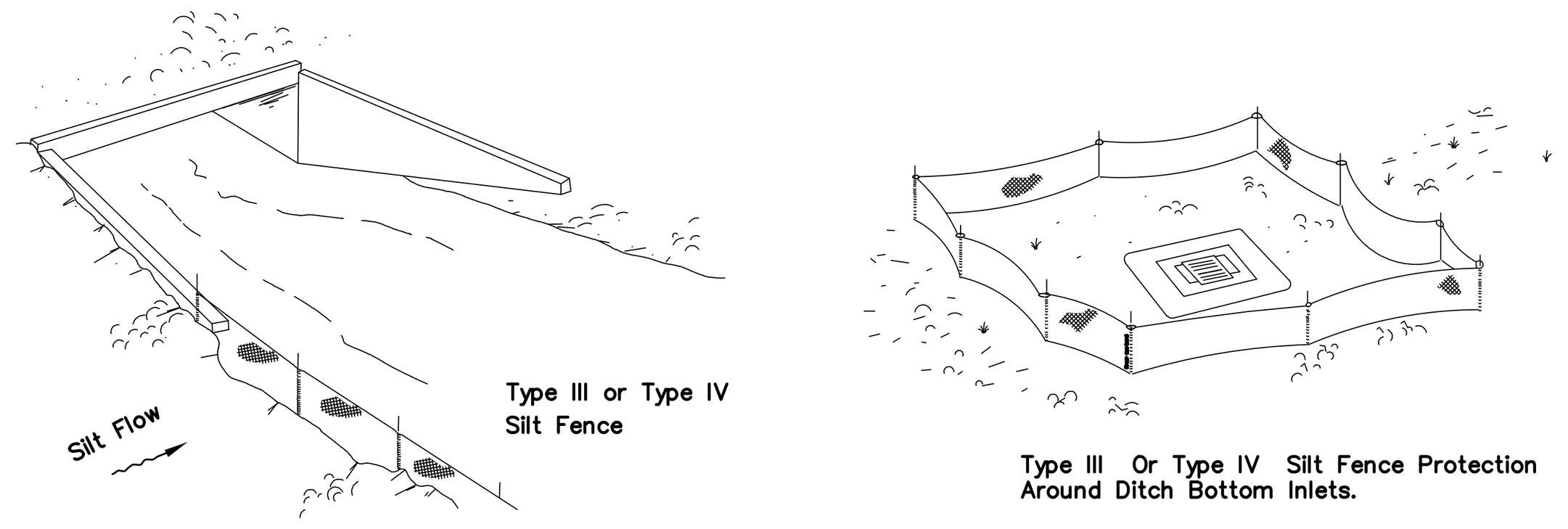

Do not deploy in a manner that silt fences will act as a dam across permanent flowing watercourses. Silt fences are to be used at upland locations and turbidity barriers used at permanent bodies of water.

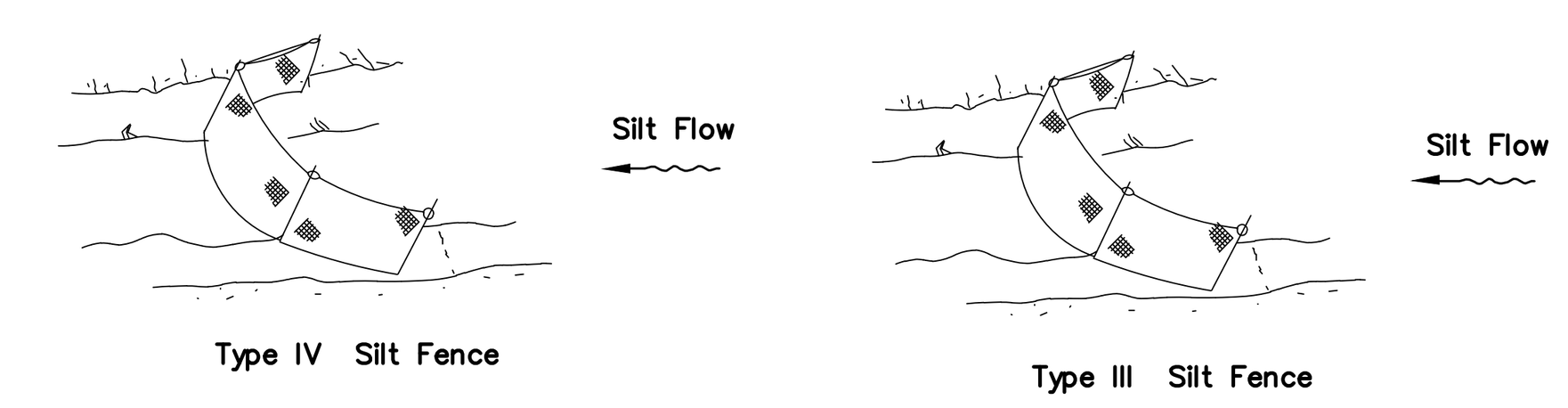

Note: Spacing for Type III & TYPE IV Fence to be in accordance with Chart 1, Sheet 1 of 3, FDOT Index No. 102 and ditch installations at drainage structures Sheet 2 of 3, FDOT Index No. 102.

SILT FENCE APPLICATIONS

SILT FENCE TYPE III & IV

(D–908)
N.T.S.

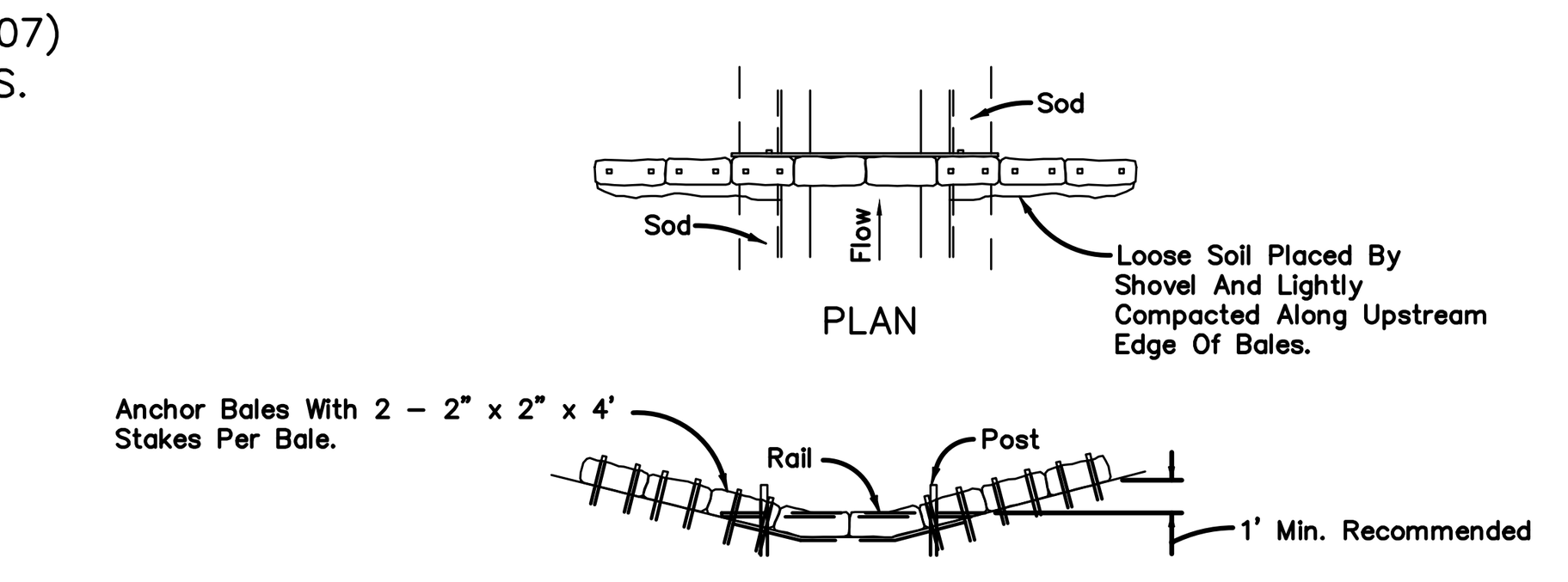

Spacing: Bale barriers for paved ditches should be spaced in accordance with Chart J, Sheet 1 of 3, Index No. 102

BARRIER FOR PAVED DITCH

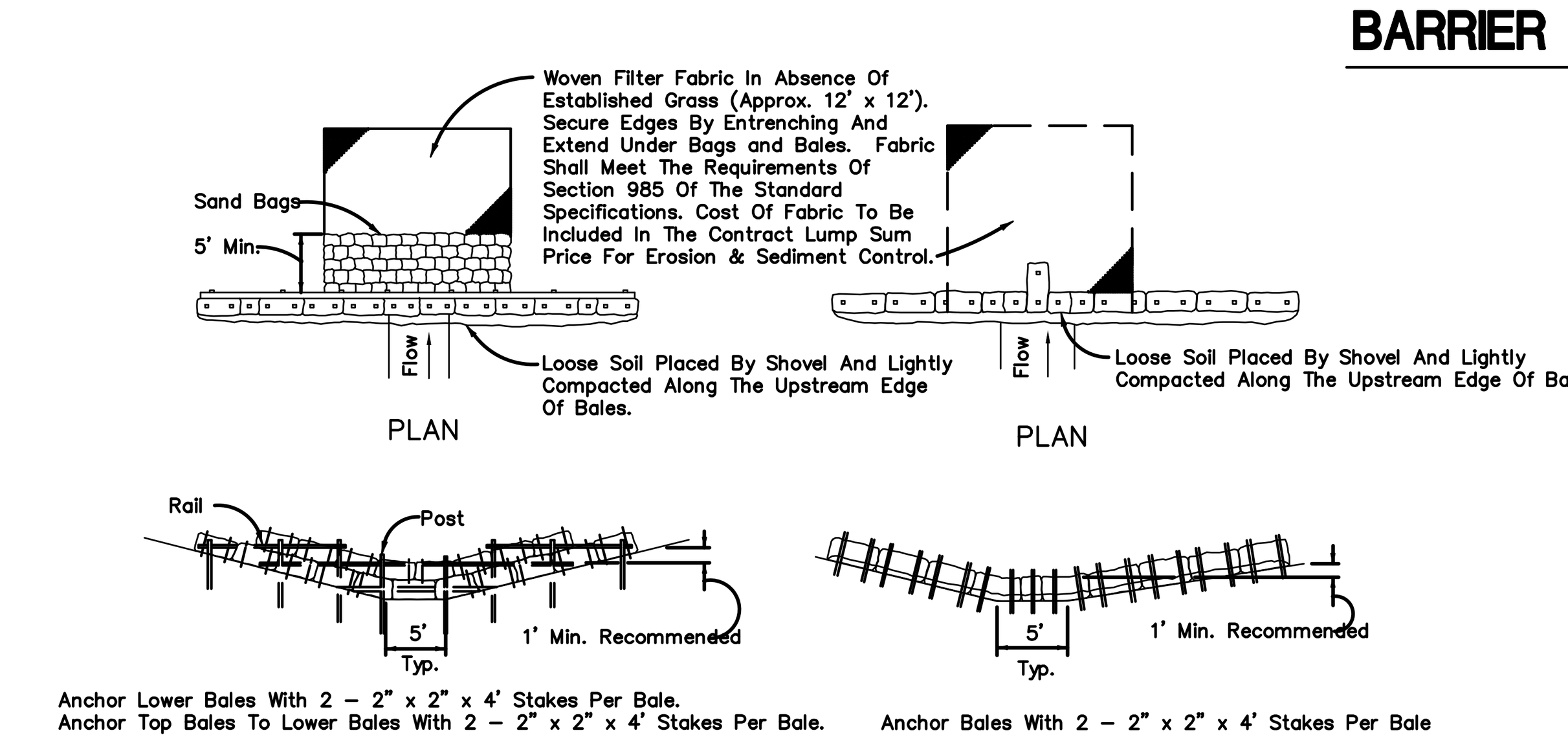

Application and Spacing: The use of Types I & II bale barriers should be limited to the conditions outlined in Chart I, Sheet 1 of 3, Index No. 102

TYPE II | TYPE I

BARRIER FOR UNPAVED DITCHES

HAY BALE BARRIERS TYPE I & II

(D–912)
N.T.S.

NOTE:
WHERE FDOT SPECS AND INDEX ARE REFERENCED, PLEASE REFER TO FDOT ROADWAY & TRAFFIC DESIGN STANDARDS, AND FDOT STANDARD SPECIFICATIONS FOR ROAD & BRIDGE CONSTRUCTION.

JonesEdmunds
CERTIFICATE OF AUTHORIZATION #1841
730 NE WALDO ROAD, GAINESVILLE, FLORIDA 32641 / (352) 377-5821
8657 BAYPINE ROAD SUITE 300, JACKSONVILLE, FL 32256 / (904) 744-5401

NO.	BY	DATE	REVISIONS
6.			
5.			
4.			
3.			
2.			
1.			

DESIGN ENGINEER
KENNETH A. FRASER, PE
FLORIDA REGISTRATION NO. 57452

DESIGNER: KFRASER
DRAWN BY: RWADE
DATE: MARCH 30, 2020
CHECKED BY: HBRIDGES
DATE: MARCH 30, 2020

JEA Building Community

BOULEVARD FORCE MAIN AND WATER MAIN REPLACEMENT
STORMWATER POLLUTION PREVENTION DETAILS

PROJ. NO. 09302-055-01
DATE: MARCH 30, 2020
SCALE: NONE

NO. SHEETS 35
SHEET NO. 13
DRAWING NO. D1

Y:\09302-jea\Projects\055-01 boulevard fm & wm replacement\CAD\Dwgs\Details\0930205501-D01.dwg Current Layout Tab = D1 Fri Mar 27, 2020 – 15:57
xrefs Attached= XR055-G-TB [..\Xref\general\XR055-G-TB.dwg]

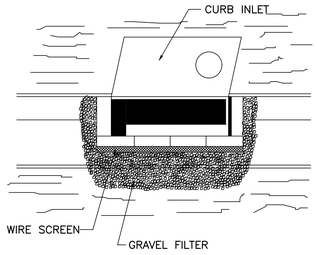

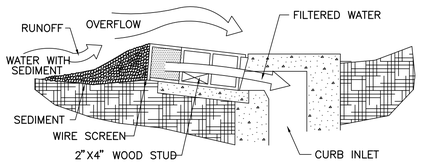

SPECIFIC APPLICATION

THIS METHOD OF INLET PROTECTION IS APPLICABLE AT CURB INLETS WHERE AN OVERFLOW CAPABILITY IS NECESSARY TO PREVENT EXCESSIVE PONDING IN FRONT OF THE STRUCTURE.

BLOCK & GRAVEL CURB INLET SEDIMENT FILTER

(D–902)
N.T.S.

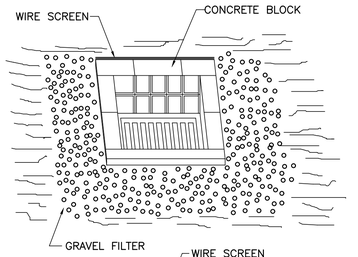

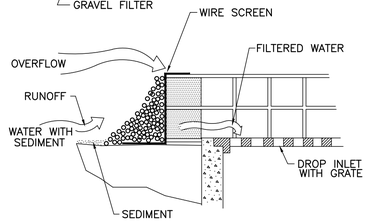

SPECIFIC APPLICATION

THIS METHOD OF INLET PROTECTION IS APPLICABLE WHERE HEAVY FLOWS ARE EXPECTED AND WHERE AN OVERFLOW CAPACITY IS NECESSARY TO PREVENT EXCESSIVE PONDING AROUND THE STRUCTURE.

BLOCK & GRAVEL DROP INLET SEDIMENT FILTER

(D–904)
N.T.S.

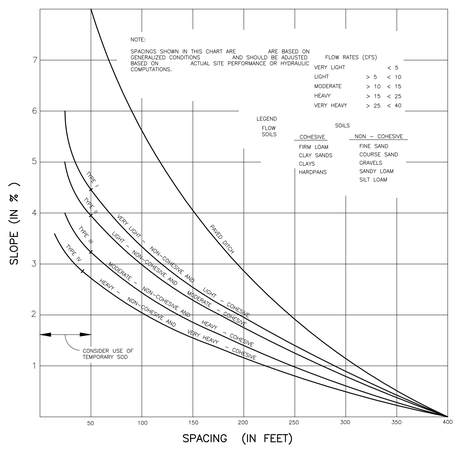

CHART I

RECOMMENDED SPACING FOR TYPE I AND TYPE II HAY BALE BARRIERS, AND TYPE III AND TYPE IV SILT FENCES AND PAVED DITCH HAY BALE BARRIERS

SPACING RECOMMENDATION FOR SILT FENCES & HAY BALES

(D–906)
N.T.S.

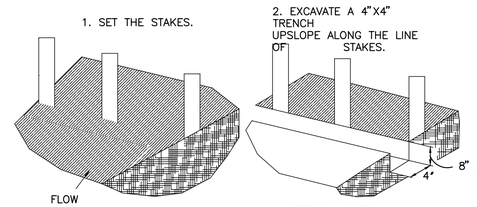

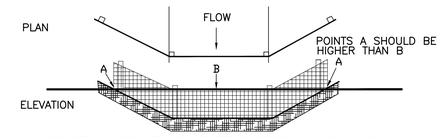

PROPER PLACEMENT OF A FILTER BARRIER IN A DRAINAGE WAY

FILTER BARRIER CONSTRUCTION DETAIL

(D–910)
N.T.S.

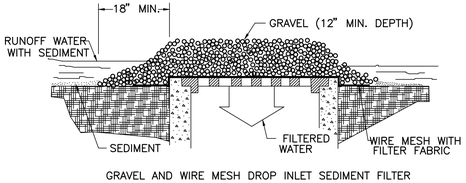

GRAVEL AND WIRE MESH DROP INLET SEDIMENT FILTER

SPECIFIC APPLICATION

THIS METHOD OF INLET PROTECTION IS APPLICABLE WHERE HEAVY CONCEN– TRATED FLOWS ARE EXPECTED, BUT NOT WHERE PONDING AROUND THE STRUCTURE MIGHT CAUSE EXCESSIVE INCONVENIENCE OR DAMAGE TO ADJACENT STRUCTURES AND UNPROTECTED AREAS.

GRAVEL INLET SEDIMENT TRAP

(D–903)
N.T.S.

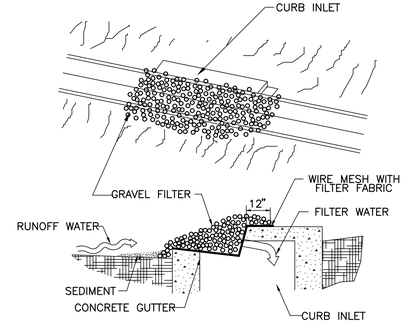

GRAVEL CURB INLET SEDIMENT FILTER

SPECIFIC APPLICATION

THIS METHOD OF INLET PROTECTION IS APPLICABLE AT CURB INLETS WHERE PONDING IN FRONT OF THE STRUCTURE IS NOT LIKELY TO CAUSE INCONVENIENCE OR DAMAGE TO ADJACENT STRUCTURES AND UNPROTECTED AREAS.

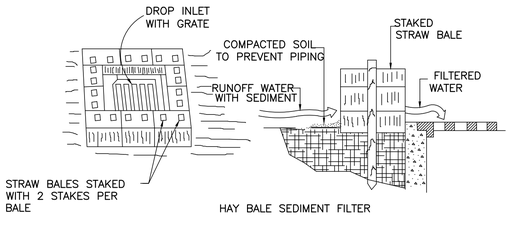

HAY BALE SEDIMENT FILTER

SPECIFIC APPLICATION

THIS METHOD OF INLET PROTECTION IS APPLICABLE WHERE THE INLET DRAINS A RELATIVELY FLAT AREA (SLOPES NO GREATER THAN 5 PERCENT) WHERE SHEET OR OVERLAND FLOWS (NOT EXCEEDING 0.5 cfs) ARE TYPICAL. THE METHOD SHALL NOT APPLY TO INLETS RECEIVING CONCENTRATED FLOWS, SUCH AS IN STREET OR HIGHWAY MEDIANS.

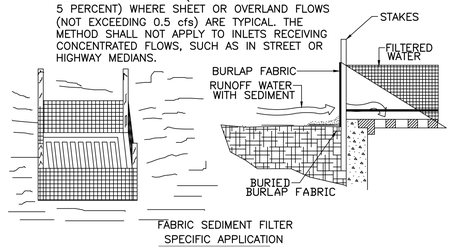

FABRIC SEDIMENT FILTER

SPECIFIC APPLICATION

THIS METHOD OF INLET PROTECTION IS APPLICABLE WHERE THE INLET DRAINS A RELATIVELY FLAT AREA (SLOPES NO GREATER THAN 5 PERCENT) WHERE SHEET OR OVERLAND FLOWS (NOT EXCEEDING 0.5 cfs) ARE TYPICAL. THE METHOD SHALL NOT APPLY TO INLETS RECEIVING CONCENTRATED FLOWS. SUCH AS IN STREET OR HIGHWAY MEDIANS.

DROP INLET SEDIMENT TRAP

(D–905)
N.T.S.

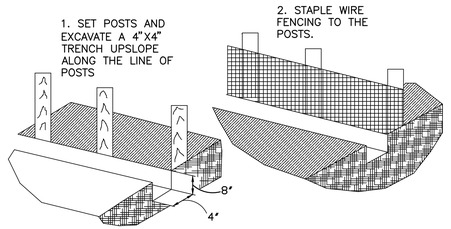

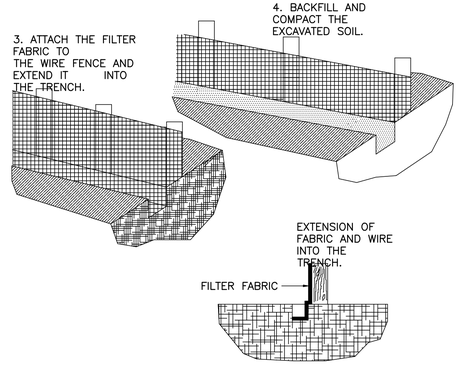

CONSTRUCTION DETAILS FOR SILT FENCES

(D–909)
N.T.S.

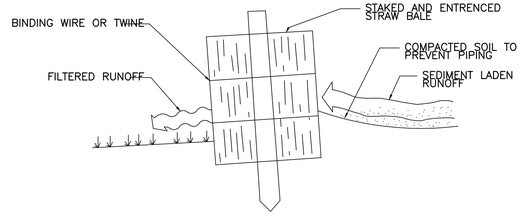

CROSS–SECTION OF A PROPERLY INSTALLED STRAW BALE

STAKED HAY BALE

(D–911)
N.T.S.

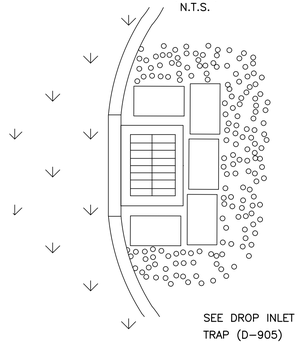

SEE DROP INLET SEDIMENT TRAP (D–905)

ERECT SEDIMENT BARRIERS AT CATCH BASINS

(TYPICAL)
N.T.S.

JonesEdmunds
CERTIFICATE OF AUTHORIZATION #1841
730 NE WALDO ROAD, SUITE 205, GAINESVILLE, FL 32641 / (352) 377-5821
8657 BAYPINE ROAD SUITE 300, JACKSONVILLE, FL 32256 / (904) 744-5401

NO.	BY	DATE	REVISIONS
6.			
5.			
4.			
3.			
2.			
1.			

DESIGN ENGINEER
KENNETH A. FRASER, PE
FLORIDA REGISTRATION NO.
57452

DESIGNED: KFRASER
DRAWN BY: RWADE
DATE: MARCH 30, 2020
CHECKED BY: HBRIDGES
DATE: MARCH 30, 2020

JEA Building Community sm

BOULEVARD FORCE MAIN AND WATER MAIN REPLACEMENT
STORMWATER POLLUTION PREVENTION DETAILS

PROJ. NO. 09302-055-01
DATE: MARCH 30, 2020
SCALE: NONE

NO. SHEETS 35
SHEET NO. 14
DRAWING NO. D2

Y:\09302-jea\Projects\055-01 boulevard (m & wm replacement)\CAD\Dwgs\Details\09302055501-D02.dwg Current Layout Tab = D2 Fri Mar 27, 2020 – 15:58
Xrefs Attached= XHUDD-U-115 [..\Xref\general\XHUDD-U-115.dwg]

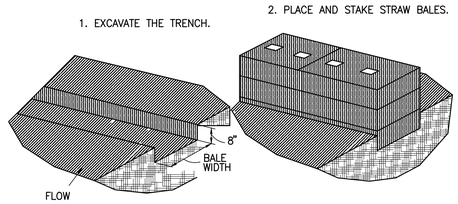

CONSTRUCTION OF A HAY BALE BARRIER

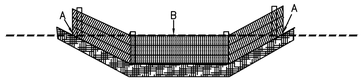

POINTS A SHOULD BE HIGHER THAN POINT B

PROPER PLACEMENT OF HAY BALE BARRIER IN DRAINAGE WAY

HAY BALE BARRIER CONSTRUCTION DETAILS

(D-913)
N.T.S.

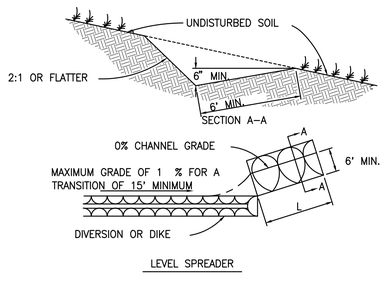

LEVEL SPREADER

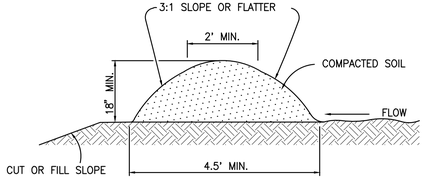

TEMPORARY DIVERSION DIKE

DIVERSION DIKE

(D-914)
N.T.S.

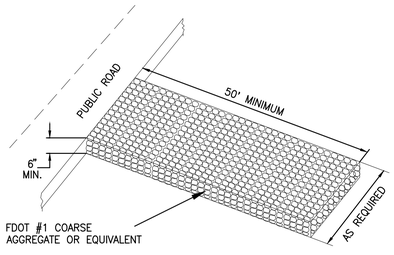

STABILIZED CONSTRUCTION ENTRANCE

N.T.S.

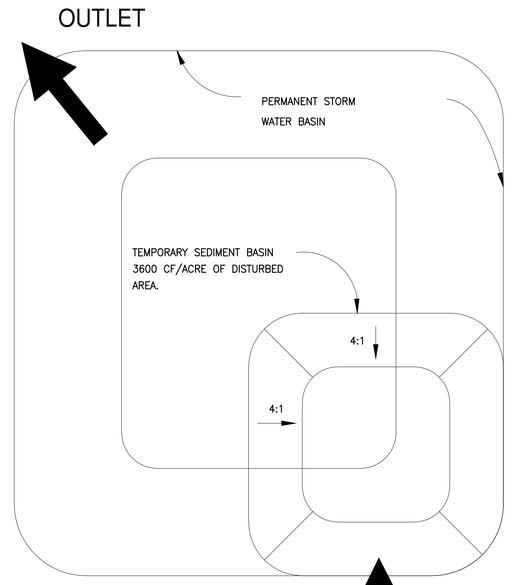

NOTE: THIS REPRESENT THE OPTIMUM LOCATION OF THE TEMPORARY SEDIMENT BASIN. OTHER ON-SITE LOCATIONS MAY ALSO BE APPROPRIATE.

TEMPORARY SEDIMENT BASIN

N.T.S.

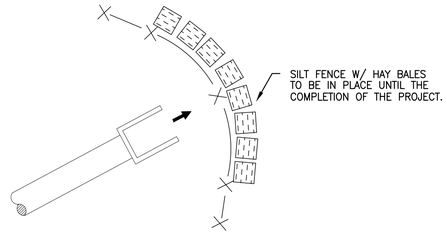

OUTLET PROTECTION

N.T.S.

JonesEdmunds
CERTIFICATE OF AUTHORIZATION #1841
730 NE WALDO ROAD, GAINESVILLE, FLORIDA 32641 / (352) 377-5821
8657 BAYPINE ROAD SUITE 300, JACKSONVILLE, FL 32256 / (904) 744-5401

NO.	BY	DATE	REVISIONS
6.			
5.			
4.			
3.			
2.			
1.			

DESIGN ENGINEER
KENNETH A. FRASER, PE
FLORIDA REGISTRATION NO.
57452

DESIGNER: KFRASER
DRAWN BY: RWADE
DATE: MARCH 30, 2020
CHECKED BY: HBRIDGES
DATE: MARCH 30, 2020

JEA Building Community sm

BOULEVARD FORCE MAIN AND WATER MAIN REPLACEMENT
STORMWATER POLLUTION PREVENTION DETAILS

PROJ. NO. 09302-055-01
DATE: MARCH 30, 2020
SCALE: NONE

NO. SHEETS 35
SHEET NO. 15
DRAWING NO. D3

Y:\09302-jea\Projects\055-01 boulevard frm & wm replacement\CAD\Dwgs\Details\093020550l-D03.dwg Current Layout Tab = D3 Fri Mar 27, 2020 - 15:58
Xrefs Attached= XHUDD-U-118 [..\Xref\general\XHUDD-U-118.dwg]

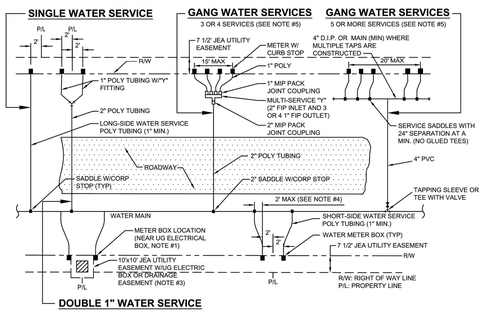

NOTES:

1. THE SKETCHES ABOVE INDICATE TYPICAL WATER SERVICE AND METER BOX LOCATIONS. ACTUAL LOCATIONS OF BOXES MAY VARY SLIGHTLY ACCORDING TO FIELD CONDITIONS ENCOUNTERED. TYPICALLY, THE METER BOX SHALL LOCATED AT THE R/W LINE BUT INSIDE THE 7 1/2' ELECTRIC EASEMENT.
2. UNLESS SPECIFIED OTHERWISE BY THE APPLICABLE COUNTY (NASSAU, CLAY OR ST. JOHNS COUNTY), THE METER BOX SHALL BE LOCATED IN THE JEA 7 1/2' UTILITY EASEMENT, AND TWO FEET INSIDE OF THE PROLONGATION OF ONE OF THE SIDE PROPERTY LINES. IF A CONFLICT EXISTS WITH OTHER UTILITIES, THE METER BOX MAY BE ADJUSTED TO FOUR FEET (MAX.) INSIDE PROPERTY LINES (N-LIEU OF TWO FEET). UNLESS APPROVED OTHERWISE BY JEA, THE METER BOX SHALL BE LOCATED IN NON-TRAFFIC AREAS (NOT IN SIDEWALKS OR DRIVEWAYS). IF THE METER BOX IS APPROVED BY JEA TO BE LOCATED IN DRIVEWAYS OR SIDEWALKS, IT SHALL BE INSTALLED WITH A TRAFFIC RATED METER BOX LID (SEE W-3 AND W-4 FOR ADDITIONAL INFORMATION). IF THE METER BOX IS LOCATED IN A PAVED AREA (TYP.), SET TOP OF BOX AT FINISHED GRADE. IF UNAPPROVED METER BOX IS IDENTIFIED BY JEA, THEN THE CONTRACTOR OR CUSTOMER SHALL BE RESPONSIBLE FOR THE COST OF RELOCATING ANY METER BOX WHICH IS LOCATED IN THE SIDEWALK OR DRIVEWAY OR THE COST TO PROVIDE THE CORRECT METER BOX. JEA SHALL APPROVE ALL DEVIATIONS TO THE ABOVE PRIOR TO CONSTRUCTION.
3. IF DRAINAGE OR OTHER EASEMENT LOCATED BETWEEN LOTS, METER BOXES SHALL BE LOCATED AT THE EASEMENT LINE BUT OUTSIDE THE EASEMENT AREA.
4. FOR SINGLE SERVICES, THE HORIZONTAL DISTANCE (PERPENDICULAR TO THE MAIN/BETWEEN THE SERVICES SADDLE AND THE METER BOX SHALL BE 2 FEET MAXIMUM. FOR DOUBLE 1" SERVICES, THE 2" POLY MAIN SHALL BE LOCATED CENTERED BETWEEN THE TWO METER BOXES. LOCATE WIRE IS REQUIRED ON ALL SERVICES 10' OR GREATER IN LENGTH. IF LOCATE WIRE IS REQUIRED, THE WIRE SHALL RUN FROM THE METER BOX (W/ PIG TAIL) TO THE MAIN (DEAD END SHALL BE TAPED WITH NO CONNECTION TO MAIN WIRE WITH THE LAST 24 INCHES STRIPED OF INSULATION/BARE WIRE AS GROUND). ALL EXCEPTIONS TO THIS REQUIREMENT MUST BE APPROVED BY JEA. THIS WILL ASSIST IN LOCATING EXISTING SERVICE LINES IN THE FUTURE.
5. GANG WATER SERVICES: FOR 3 OR 4 SERVICES IN ONE AREA, A DUCTICLE IRON PIPE (D.I.P.) WATER MAIN EXTENSION W/LOCATE WIRE MAY BE UTILIZED ON EITHER SHORT-SIDE OR LONG SIDE SERVICES WHERE SHOWN ON THE DRAWINGS. LOCATE WIRE SHALL EXTEND FROM ONE METER BOX TO CORP STOP AT WATER MAIN. FOR 5 OR MORE SERVICES IN ONE AREA, A WATER MAIN EXTENSION W/LOCATE WIRE MAY BE UTILIZED ON EITHER SHORT-SIDE OR LONG SIDE SERVICES WHERE SHOWN ON THE DRAWINGS (TAPS STAGGERED AND AT 2 FEET ON CENTER-MIN). FOR WATER SUPPLY HEADERS WHERE 5 OR MORE TAPS ARE CONSTRUCTED, THE HEADER PIPE SHALL BE 4" AT A MINIMUM. EXAMPLE: CONSTRUCT A 4" MAIN PVC CROSSING THE STREET FOR 5 RESIDENTIAL CUSTOMERS, UTILIZING 4" DIP, 4" PIPE, 4"X1" SADDLES AND 1" CORP STOPS (NO GLUED TEE FITTINGS). THE 4" OR LARGER D.I.P. WATER MAIN MUST BE SIZED AND DESIGNED BY THE P.E. ENGINEER.
6. DOUBLE 1" WATER SERVICES IS ALLOWED FOR SHORT SIDE OR LONG SIDE SERVICES AND WHERE SHOWN ON THE DRAWINGS.
7. A 1" IRRIGATION SERVICE MAYBE TAPPED INTO THE (1" MIN) DOMESTIC WATER SERVICE LINE (WHICH SERVES THE SAME CUSTOMER) UTILIZING A 1" BRONZE "Y" FITTING. (IN AREAS WHERE NO RECLAIMED WATER IS AVAILABLE).
8. No 2" AND SMALLER WATER SERVICE TAPS PERMITTED ON WATER MAINS WHICH ARE 20" AND LARGER SIZE.
9. RECLAIMED WATER METER BOXES ON SERVICES SHALL BE CONSTRUCTED SIMILAR TO THE ABOVE AND SHALL BE LOCATED, AT A MIN. OF 10' FROM THE POTABLE WATER SERVICE, AND/OR BOX AND NOT ALLOWED IN CONCRETE OR ASPHALT UNLESS APPROVED OTHERWISE BY JEA.
10. SERVICE SIZE SHALL BE SAME AS THE METER SIZE.

WATER OR RECLAIM SERVICE INSTALLATIONS 2" AND SMALLER METER

January 2019 PLATE W-1

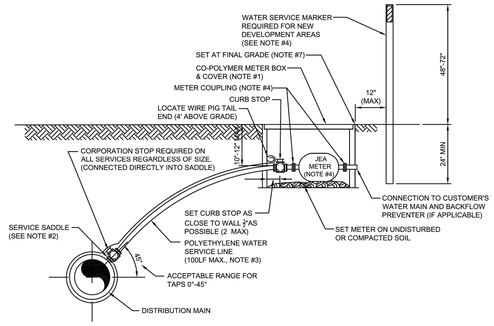

NOTES:

1. SEE PLATE W-1 FOR METER LOCATION REQUIREMENTS.
2. SINGLE BAND SADDLES SHALL BE UTILIZED ON NEW 1" WATER SERVICES WHICH ARE INSTALLED ON A DRY 10" SIZE OR SMALLER WATER MAIN (NEW WATER MAIN CONSTRUCTION). FOR WET TAPS OR WATER MAINS 12" SIZE AND LARGER, A DOUBLE BAND SADDLE IS REQUIRED. BRASS SADDLES MAY BE UTILIZED ON NEW 1 INCH AND SMALLER WATER SERVICES WHICH ARE INSTALLED ON A DRY 10 INCH OR SMALLER PVC WATER MAIN.
3. NO OPEN CUT UNDER ROADWAY PAVING ALLOWED UNLESS THE ROADWAY IS BEING RECONSTRUCTED OR IF DIRECTED OTHERWISE BY J.E.A. CONSTRUCT POLY LINE WITH 24" (MIN.) COVER UNDER ROADWAYS. THE POLY WATER SERVICE LINE SHALL BE SAME SIZE AS THE METER (1" MINIMUM) AND BE INSTALLED PERPENDICULAR TO THE MAIN AND NOT EXCEED 100LF UNLESS APPROVED OTHERWISE BY JEA.
4. INSTALL PVC PLUG IN ALL CURB STOPS IF WATER SERVICE IS "NOT IN USE" (I.E.- IF NO METER IS INSTALLED). WATER SERVICES SERVING VACANT LOTS (SERVICE NOT IN USE), SHALL INCLUDE A "W" CUT INTO THE CURB (CLOSEST TO THE METER BOX), AND PAINTED BLUE (PAINTED PURPLE FOR RECLAIMED WATER). IN ADDITION, FOR NEW DEVELOPMENT AREAS WHERE THE WATER SERVICE IS "NOT IN USE", A LANDSCAPE TIMBER OR 3x3 MIN. P.T. POST (TOP PAINTED BLUE OR PURPLE FOR RECLAIMED WATER). THE REMOVAL OR TRANSFER OF A WATER SERVICE SHALL INCLUDE BRASS METER COUPLINGS (HEX ON BARREL TYPE).
5. NO 2" AND SMALLER WATER SERVICE TAPS PERMITTED ON WATER MAINS WHICH ARE 20" AND LARGER SIZE.
6. THE CONTRACTOR SHALL BE RESPONSIBLE FOR THE REPAIR OR REPLACEMENT OF THE METER OR ELECTRONIC DEVICES IF DAMAGED BY THE CONTRACTOR DURING THE CONSTRUCTION PERIOD.
7. METER BOX AND TOP SHALL BE CLEAR OF ALL DEBRIS TO ALLOW FULL ACCESS TO BOX (i.e. NO DIRT, TRASH OR OTHER DEBRIS PLACED ON TOP OF BOX).
8. LOCATE WIRING REQUIRED ON ALL SERVICES 10' OR GREATER IN LENGTH. SEE PLATE W-44.

WATER SERVICE DETAIL- 2" AND SMALLER METER

JANUARY 2019 PLATE W-2

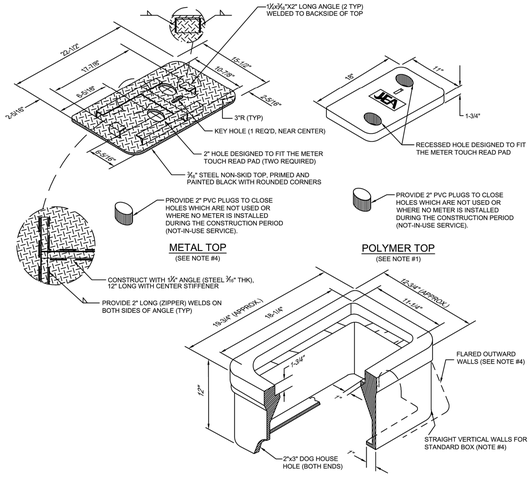

POLYMER BOX

NOTES:

1. THE STANDARD BOX (A-8 (ASTM C857) LOAD RATING WITH STRAIGHT VERTICAL WALLS) & TOP (A-8 (ASTM C857) RATING WITH 2 HOLES) SHALL BE MADE OF POLYMER CONCRETE. (SIMILAR TO OLD BROOKS SERIES 37 BOX). BOX WALLS SHALL BE FIBERGLASS. THE INSIDE LIP OF THE BOX SHALL BE RATED SAME AS THE BOX. THE ONE HOLE LIDS ARE FOR SPECIAL ORDERS ONLY AND REQUIRE JEA'S APPROVAL PRIOR TO USE.
2. ALL SIZES SHOWN ARE IN INCHES AND ARE APPROXIMATE SIZES.
3. POLYMER BOX APPROXIMATE WEIGHT 258#. POLYMER TOP APPROXIMATE WEIGHT 208#. SEE CONSTRUCTION DETAILS W-3A (TWO HOLE) AND W-3B (ONE HOLE) FOR MANUFACTURING DETAILS FOR COVERS.
4. UNLESS APPROVED OTHERWISE IN WRITING BY JEA, ALL METER BOXES SHALL BE LOCATED IN NON-TRAFFIC AREAS (NOT IN THE ROADWAY, DRIVEWAYS OR SIDEWALKS). IF AN EXCEPTION TO THIS RULE IS APPROVED BY JEA, THEN THE FOLLOWING SHALL BE PROVIDED:
   A) UNDER NO CIRCUMSTANCE SHALL A METER BOX BE LOCATED IN A COMMERCIAL TRAFFIC AREA.
   B) IF AN EXCEPTION IS APPROVED IN WRITING THE METER BOX LOCATED IN A SIDEWALK OR RESIDENTIAL DRIVEWAY SHALL INCLUDE A POLYMER BOX WITH FLARED OUTWARD WALLS (NOT STRAIGHT WALLS) AND A POLYMER TOP. BOX AND TOP SHALL COMPLY WITH A-8 (ASTM C857) LOAD RATING.
   C) METAL TOPS MAY BE UTILIZED IF SPECIFICALLY APPROVED BY JEA MANAGER OR JEA METER O&M STAFF.

WATER METER BOX & COVER FOR 1" AND SMALLER METERS

JANUARY 2019 PLATE W-3

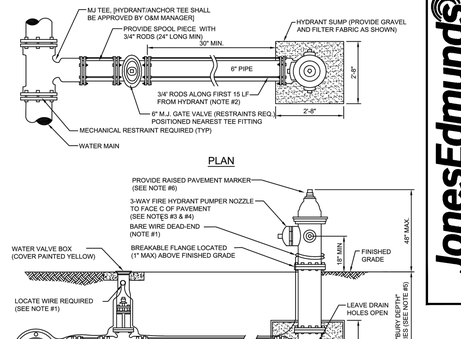

PLAN

SECTION

NOTES:

1. LOCATE WIRE SHALL BE ROUTED FROM THE VALVE TO THE HYDRANT AS SHOWN ABOVE LEAVING ENOUGH SLACK TO REACH 4' ABOVE FINAL GRADE. THE END OF THE WIRE SHALL BE SECURED TO THE PIPE MAIN. SEE SECTION 350, LOCATE WIRE INSTALLATION PARAGRAPH.
2. FIRE HYDRANTS SHALL BE INSTALLED BETWEEN BACK OF CURB AND FACE OF SIDEWALK AND NOT WITHIN SWALE/DITCH AREAS. THE DISTANCE RANGE FROM EDGE OF ADJACENT PAVEMENT, BACK OF CURB AND FACE OF SIDEWALK SHALL BE IN COMPLIANCE WITH LOCAL COUNTY FIRE DEPARTMENT RULES AND AS APPROVED BY JEA AND APPLICABLE PERMITTING AGENCIES. DISTANCE SHALL BE MEASURED TO THE CLOSEST PART OF THE FIRE HYDRANT (I.E. THE PUMPER NOZZLE). THE MAXIMUM DISTANCE (BACK OF CURB) SHALL BE IN COMPLIANCE WITH LOCAL COUNTY FIRE DEPARTMENT RULES AND AS APPROVED BY JEA. FOR OTHER LOCATION LIMITATIONS SEE PLATES W-10 AND W-11. IF PIPING BETWEEN TEE AND HYDRANT IS LONGER THAN 60 LF, AN ADDITIONAL 6" GATE VALVE IS REQUIRED AT THE HYDRANT LOCATION (PROVIDE 30" SEPARATION). ALL PIPING, VALVES AND FITTINGS ALONG THE HYDRANT BRANCH MAIN WHICH IS WITHIN 15 LF OF THE HYDRANT SHALL BE RESTRAINED UTILIZING ONLY TWO 3/4" THREADED END (THDED-END(S) STEEL RODS AND EYE BOLTS (NO JOINT RESTRAINT DEVICES REQUIRED). A SPLIT SERRATED RING WITH RESTRAINT EARS (EBAA 15 PF06 or EQUAL) MAYBE USED IN THIS ASSEMBLY. ALL OTHER JOINTS ALONG THE HYDRANT BRANCH MAIN OUTSIDE OF THE FIRST 15 LF SHALL INCLUDE JOINT RESTRAINTS.
3. OPERATION OF THE FIRE HYDRANT SHALL BE EITHER FULL OPEN POSITION OR TOTALLY CLOSED POSITION. THE HYDRANT SHALL NOT BE UTILIZED TO THROTTLE OUTLET FLOW.
4. PRIOR TO PROJECT FINAL INSPECTION, THE HYDRANT AND ALL ABOVE GROUND PIPING SHALL BE RE-OILED, GREASED AND REPAINTED (RUS- KIL ENAMEL-INTERNATIONAL YELLOW OR EQUAL). PRIVATELY OWNED AND MAINTAINED FIRE HYDRANTS SHALL BE PAINTED RED.
5. FIRE HYDRANTS SHALL BE ORDERED WITH PROPER "BURY DEPTH" TO MEET ACTUAL FIELD CONDITIONS. THIS IS ESPECIALLY IMPORTANT FOR BRANCH LINES WHICH TEE-OFF A 12" OR LARGER WATER MAIN. UNLESS APPROVED OTHERWISE BY JEA, THE INSTALLATION OF (45°) BENDS IS NOT ACCEPTABLE WHEN UTILIZED TO CORRECT AN IMPROPERLY FURNISHED HYDRANT. THE USE OF HYDRANT EXTENSIONS SHOULD BE MINIMIZED.
6. BLUE REFLECTIVE MARKERS SHALL BE INSTALLED IN SUCH A MANNER THAT THE REFLECTIVE FACE OF THE MARKER IS PERPENDICULAR TO A LINE PARALLEL TO THE ROADWAY CENTERLINE. THE BLUE REFLECTIVE MARKERS SHALL BE PLACED IN THE CENTER OF THE TRAVEL LANE, DIRECTLY ACROSS FROM AND ADJACENT TO EACH FIRE HYDRANT.

FIRE HYDRANT INSTALLATION USING MECHANICAL JOINT TEE

JANUARY 2019 PLATE W-13

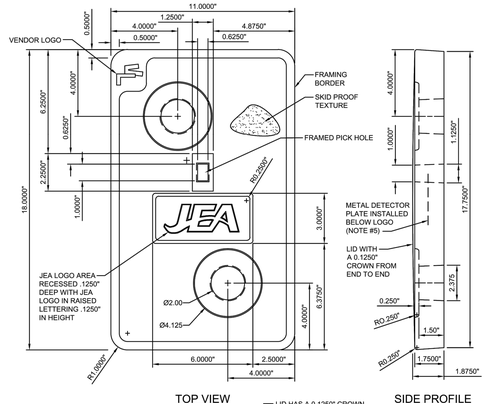

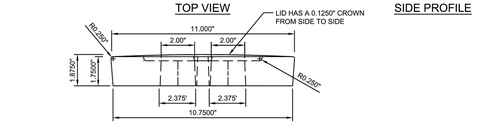

END PROFILE

NOTES:

1. ALL DIMENSIONS ARE IN INCHES.
2. COLOR SHALL BE OFF-WHITE, NON-POROUS, SAND TEXTURED SATIN FINISH.
3. ALL TOPS SHALL MEET A-8 (ASTM C857) LOAD RATING.
4. THE LID SHALL BE CERTIFIED BY CELLNET TECHNOLOGY INC AND SENSUS METERING SYSTEMS TO BE RF COMPATIBLE WITH THE SENSUS MTU.
5. METAL DETECTOR PLATE SHALL BE DETECTABLE BY JEA MAGNETIC LOCATE EQUIPMENT.

WATER METER BOX POLYMER COVER MODEL No. 37 - TWO HOLE

JANUARY 2019 PLATE W-3A

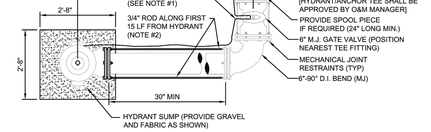

PLAN

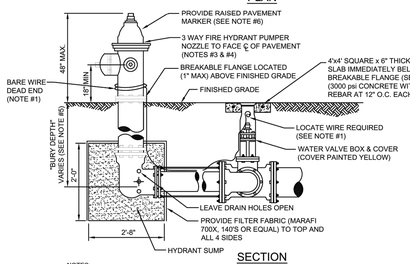

SECTION

NOTES:

1. LOCATE WIRE SHALL BE ROUTED FROM THE VALVE TO THE HYDRANT AS SHOWN ABOVE LEAVING ENOUGH SLACK TO REACH 4' ABOVE FINAL GRADE. THE END OF THE WIRE SHALL BE SECURED TO THE PIPE MAIN. SEE SECTION 350, LOCATE WIRE INSTALLATION PARAGRAPH.
2. FIRE HYDRANTS SHALL BE INSTALLED BETWEEN BACK OF CURB AND FACE OF SIDEWALK. ALL HYDRANTS SHALL BE LOCATED NO LESS THAN THREE (3) FEET FROM THE EDGE OF PAVEMENT OR BACK OF CURB OF THE ADJACENT ROADWAY AND NO LESS THAN THREE (3) FEET FROM ANY PHYSICAL FEATURE WHICH MAY OBSTRUCT ACCESS OR VIEW OF ANY HYDRANT UNLESS OTHERWISE APPROVED BY THE JEA. THE MAXIMUM DISTANCE (BACK OF CURB) SHALL BE IN COMPLIANCE WITH LOCAL COUNTY FIRE DEPARTMENT RULES AND AS APPROVED BY JEA. FOR OTHER LOCATION LIMITATIONS SEE PLATES W-10 AND W-11. IF PIPING BETWEEN TEE AND HYDRANT IS LONGER THAN 60 LF, AN ADDITIONAL 6" GATE VALVE IS REQUIRED AT THE HYDRANT LOCATION (PROVIDE 30" SEPARATION). ALL PIPING, VALVES AND FITTINGS ALONG THE HYDRANT BRANCH MAIN WHICH IS WITHIN 15 LF OF THE HYDRANT SHALL BE RESTRAINED UTILIZING ONLY TWO 3/4" THREADED END (THDED-END(S) STEEL RODS AND EYE BOLTS (NO JOINT RESTRAINT DEVICES REQUIRED). A SPLIT SERRATED RING WITH RESTRAINT EARS (EBAA 15 PF06 or EQUAL) MAYBE USED IN THIS ASSEMBLY. ALL OTHER JOINTS ALONG THE HYDRANT BRANCH MAIN OUTSIDE OF THE FIRST 15 LF SHALL INCLUDE JOINT RESTRAINTS.
3. OPERATION OF THE FIRE HYDRANT SHALL BE EITHER FULL OPEN POSITION OR TOTALLY CLOSED POSITION. THE HYDRANT SHALL NOT BE UTILIZED TO THROTTLE OUTLET FLOW.
4. PRIOR TO PROJECT FINAL INSPECTION, THE HYDRANT AND ALL ABOVE GROUND PIPING SHALL BE RE-OILED, GREASED AND REPAINTED (RUS- KIL ENAMEL-INTERNATIONAL YELLOW OR EQUAL). PRIVATELY OWNED AND MAINTAINED FIRE HYDRANTS SHALL BE PAINTED RED.
5. FIRE HYDRANTS SHALL BE ORDERED WITH PROPER "BURY DEPTH" TO MEET ACTUAL FIELD CONDITIONS. THIS IS ESPECIALLY IMPORTANT FOR BRANCH LINES WHICH TEE-OFF A 12" OR LARGER WATER MAIN. UNLESS APPROVED OTHERWISE BY JEA, THE INSTALLATION OF (45°) BENDS IS NOT ACCEPTABLE WHEN UTILIZED TO CORRECT AN IMPROPERLY FURNISHED HYDRANT. THE USE OF HYDRANT EXTENSIONS SHOULD BE MINIMIZED.
6. BLUE REFLECTIVE MARKERS SHALL BE INSTALLED IN SUCH A MANNER THAT THE REFLECTIVE FACE OF THE MARKER IS PERPENDICULAR TO A LINE PARALLEL TO THE ROADWAY CENTERLINE. THE BLUE REFLECTIVE MARKERS SHALL BE PLACED IN THE CENTER OF THE TRAVEL LANE, DIRECTLY ACROSS FROM AND ADJACENT TO EACH FIRE HYDRANT.

FIRE HYDRANT INSTALLATION LIMITED SPACE

JANUARY 2019 PLATE W-14

HORIZONTAL & VERTICAL SEPARATION REQUIREMENTS

PROPOSED UTILITY

CONFLICTING UTILITY	POTABLE WATER			WASTEWATER GRAVITY AND FORCE MAIN			RECLAIMED WATER			VACUUM SEWERS		
	HORIZ.	VERT.	JOINT SPACING*	HORIZ.	VERT.	JOINT SPACING*	HORIZ.	VERT.	JOINT SPACING*	HORIZ.	VERT.	JOINT SPACING*
POTABLE WATER	3' NOTE 1	12"	3' NOTE 2	6' to 10'	12" NOTE 5	6' NOTE 2	3'	12"	6' NOTE 2	3' to 10'	12"	3' NOTE 2
RECLAIMED WATER	3'	12"	6' NOTE 2	3' NOTE 1	12"	3' NOTE 2	3'	12"	6' NOTE 2	3' NOTE 1	12"	3' NOTE 2
WASTEWATER (GRAVITY AND FORCE MAIN)	6' to 10'	12"	6' NOTE 2	3' NOTE 1	12"	6"	3' NOTE 1	12"	3' NOTE 2	3' NOTE 1	12"	3' NOTE 2
VACUUM SEWERS	3' to 10'	12"	3' NOTE 2	3' NOTE 1	12"	6"	3' NOTE 1	12"	3' NOTE 2	3' NOTE 1	12"	3' NOTE 2
RIGHT OF WAYS	3' NOTE 1	N/A	N/A	3' NOTE 1	N/A	N/A	3' NOTE 1	N/A	N/A	3' NOTE 1	N/A	N/A
PERMANENT STRUCTURES (BUILDINGS, SIGNS, POLES, ETC.)	SEE NOTE 7	N/A	N/A	SEE NOTE 7	N/A	N/A	SEE NOTE 7	N/A	N/A	SEE NOTE 7	N/A	N/A
STORM SEWERS	3' NOTE 1	12"	3' NOTE 2	3' NOTE 1	12"	3' NOTE 2	3' NOTE 1	12"	3' NOTE 2	3' NOTE 1	12"	3' NOTE 2
GAS	3' NOTE 1	12"	3' NOTE 2	3' NOTE 1	12"	3' NOTE 2	3' NOTE 1	12"	3' NOTE 2	3' NOTE 1	12"	3' NOTE 2
TREES	3'-6' NOTE 6	N/A	N/A	3'-6' NOTE 6	N/A	N/A	3'-6' NOTE 6	N/A	N/A	3'-6' NOTE 6	N/A	N/A
ALL OTHER UTILITIES	3' NOTE 1	12"	3' NOTE 2	3' NOTE 1	12"	3' NOTE 2	3' NOTE 1	12"	3' NOTE 2	3' NOTE 1	12"	3' NOTE 2

NOTES:

1. THIS SEPARATION REQUIREMENT IS TO PROVIDE ACCESSIBILITY FOR CONSTRUCTION AND MAINTENANCE. THREE FEET OF HORIZONTAL SEPARATION IS THE MINIMUM FOR PIPES WITH THREE FEET OF COVER. FOR PIPES INSTALLED AT GREATER DEPTH, PROVIDE AN ADDITIONAL FOOT OF SEPARATION FOR EACH ADDITIONAL FOOT OF DEPTH.
2. THE MINIMUM JOINT SPACING REQUIRED FROM CROSSING FROM OTHER UTILITIES WHILE STILL MAINTAINING MINIMUM VERTICAL SEPARATION.
3. DISTANCES GIVEN ARE FROM OUTSIDE OF PIPE TO OUTSIDE OF PIPE.
4. NO WATER PIPE SHALL PASS THROUGH OR COME INTO CONTACT WITH ANY PART OF SANITARY OR STORM WATER MANHOLE OR STRUCTURES.
5. WATER MAIN SHOULD CROSS ABOVE OTHER PIPES WHENEVER POSSIBLE. WHEN WATER MAIN MUST BE BELOW OTHER UTILITY PIPING, THE MINIMUM SEPARATION SHALL BE 12 INCHES.
6. REFER TO POTABLE WATER PIPING- SECTION 350, III.4.11.
7. SEE SECTION 350, III.4.10 FOR MINIMUM SEPARATION REQUIREMENTS FROM PIPE TO STRUCTURES.

SEPARATION REQUIREMENTS FOR WATER, WASTEWATER AND RECLAIMED WATER MAINS

JANUARY 2019 PLATE W-10

WATER MAIN AND NON-WATER MAIN SEPARATION REQUIREMENTS - NOTES

1. IT IS REQUIRED THAT "WATER MAINS" BE INSTALLED, CLEANED, DISINFECTED AND HAVE A SATISFACTORY BACTERIOLOGICAL SURVEY PERFORMED IN ACCORDANCE WITH THE LATEST APPLICABLE AWWA STANDARDS, CHAPTER 62-555, F.A.C. AND LATEST JEA WATER AND SEWER STANDARDS. FOR THE PURPOSE OF THIS SECTION, THE PHRASE "WATER MAINS" SHALL MEAN MAINS, INCLUDING TREATMENT PLANT PROCESS PIPING, CONVEYING EITHER RAW, PARTIALLY TREATED, OR FINISHED DRINKING WATER; FIRE HYDRANT LEADS; AND SERVICE LINES THAT HAVE AN INSIDE DIAMETER OF THREE (3) INCHES OR GREATER. IN ADDITION, THE PHRASE "RECLAIMED WATER" REFERS TO THE WATER REGULATED UNDER PART III OF CHAPTER 62-610, F.A.C.
2. NEW OR RELOCATED, UNDERGROUND WATER MAINS SHALL BE LAID TO PROVIDE A HORIZONTAL DISTANCE OF AT LEAST THREE (3) FEET BETWEEN THE OUTSIDE OF THE WATER MAIN AND THE OUTSIDE OF ANY EXISTING OR PROPOSED STORM SEWER, STORMWATER FORCE MAIN, OR PIPELINE CONVEYING RECLAIMED WATER.
3. NEW OR RELOCATED, UNDERGROUND WATER MAINS SHALL BE LAID TO PROVIDE A HORIZONTAL DISTANCE OF AT LEAST SIX (6) FEET, AND PREFERABLY TEN (10) FEET, BETWEEN THE OUTSIDE OF THE WATER MAIN AND THE OUTSIDE OF ANY EXISTING OR PROPOSED GRAVITY OR PRESSURE-TYPE SANITARY SEWER, WASTEWATER FORCE MAIN, OR PIPELINE CONVEYING RECLAIMED WATER. THE MINIMUM HORIZONTAL SEPARATION DISTANCE BETWEEN WATER MAINS AND GRAVITY-TYPE SANITARY SEWERS MAY BE REDUCED TO THREE (3) FEET WHERE THE BOTTOM OF THE WATER MAIN IS LAID AT LEAST SIX (6) INCHES ABOVE THE TOP OF THE SEWER (SPECIAL CASE).
4. NEW OR RELOCATED, UNDERGROUND WATER MAINS CROSSING ANY EXISTING OR PROPOSED GRAVITY OR VACUUM-TYPE SANITARY SEWER OR STORM SEWER SHALL BE LAID SO THE OUTSIDE OF THE WATER MAIN IS AT LEAST SIX (6) INCHES, AND PREFERABLE TWELVE (12) INCHES, ABOVE OR AT LEAST TWELVE (12) INCHES BELOW THE OUTSI

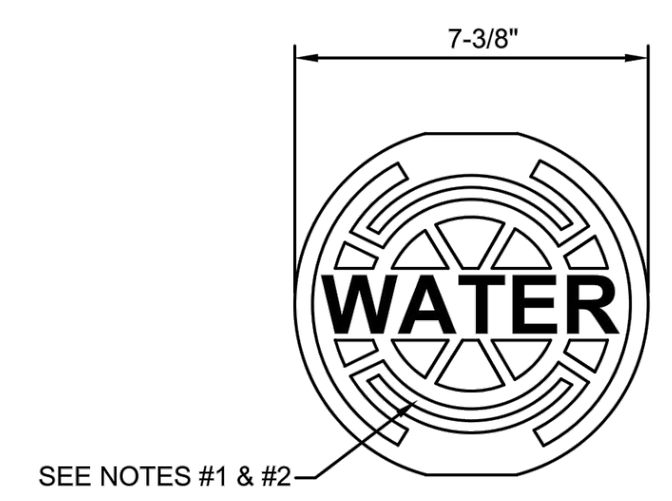

HEAVY DUTY RATING

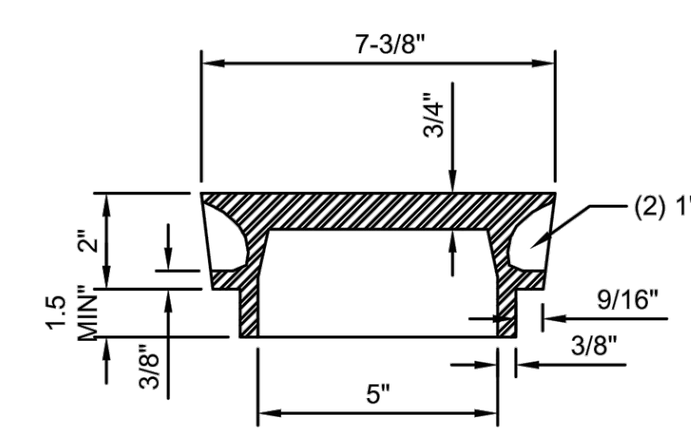

NOTES:

1. PAINT TOP OF THE COVER WITH ENAMEL PAINT (BLUE COLOR) FOR WATER.
2. FOR "REUSE" PAINT TOP PANTONE PURPLE.
3. LID WEIGHT: APPROX. 12 LBS.

WATER SYSTEM VALVE BOX COVER

JANUARY 2019 PLATE W-16

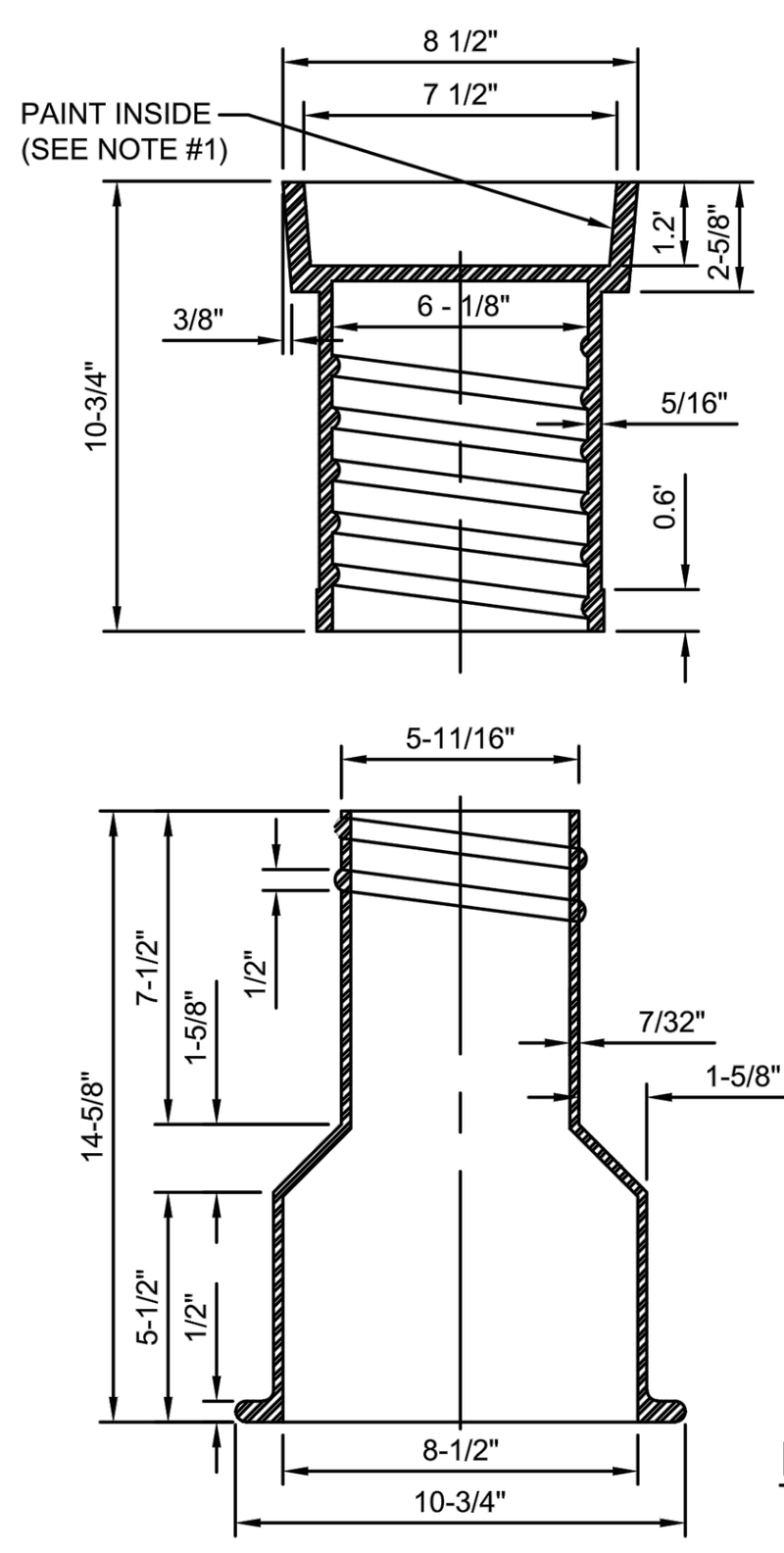

HEAVY DUTY RATING

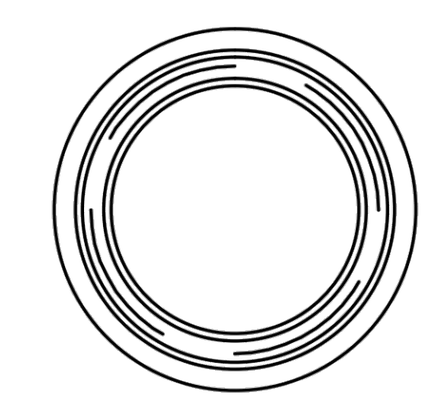

TOP SECTION VIEW
(23 LBS. APPROX.)

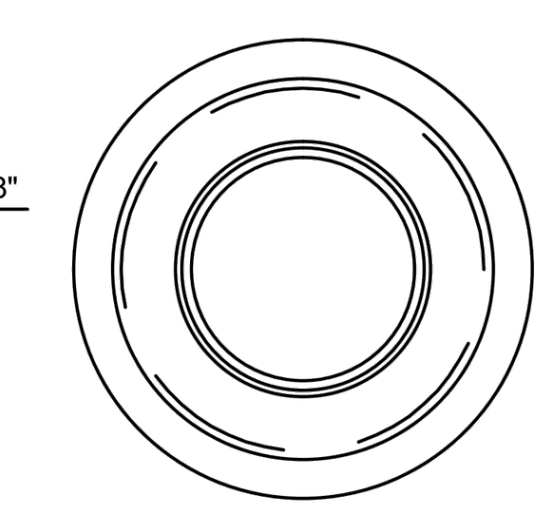

BOTTOM SECTION VIEW
(26 LBS. APPROX.)

NOTES:

1. PAINT THE INSIDE OF THE TOP SECTION OF THE BOX WITH APPLICABLE COLOR (BLUE OR PURPLE)
2. HEAVY DUTY RATING (TOTAL WEIGHT APPROX. 50 LBS.).
3. REFERENCE SECTION 351, PARAGRAPH X.2.

WATER SYSTEM VALVE BOX

JANUARY 2019 PLATE W-17

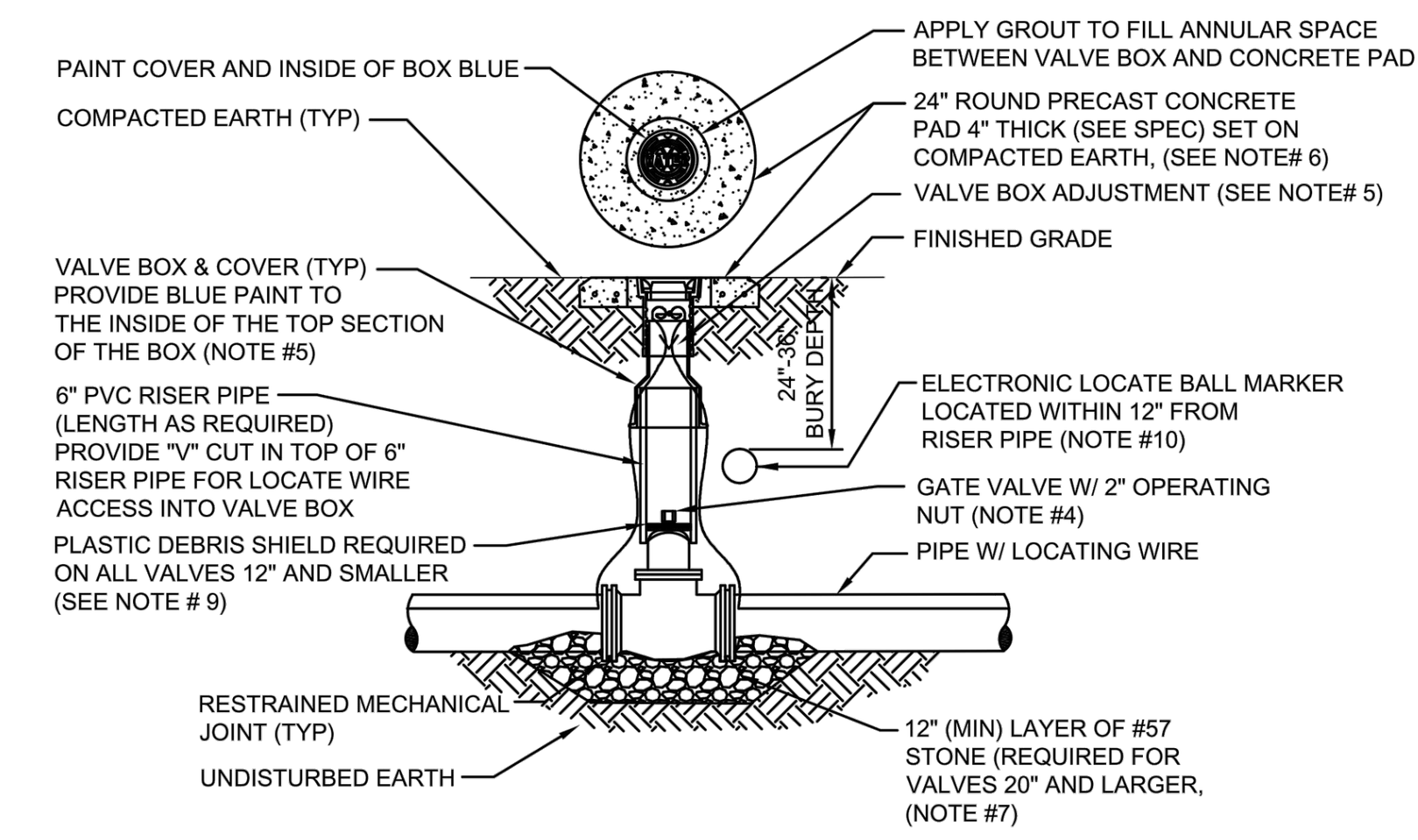

NOTES:

1. FOR UNPAVED LOCATIONS, A PRECAST CONCRETE VALVE PAD SHALL BE PROVIDED AND INSTALLED FLUSH WITH GRADE. CONCRETE PAD IS NOT REQUIRED FOR VALVE LOCATED IN THE ROADWAY, UNLESS SHOWN OR NOTED OTHERWISE.
2. LOCATING WIRE IS REQUIRED ON ALL PRESSURE PIPING (SEE DETAILW-44).
3. A "V" CUT SHALL BE CARVED IN THE CURB CLOSEST/ADJACENT/(ASPHALT IF NO CURB) TO ALL BELOW GRADE VALVES. THE "V" CUT IS TO BE PAINTED BLUE WATER/PURPLE RECLAIMED.
4. IN PAVED AREAS, INSTALL VALVE AT A DEPTH TO ALLOW A 12" MIN. DISTANCE BETWEEN THE VALVE COVER PLATE AND THE TOP OF THE VALVE OPERATING NUT. OUTSIDE OF PAVED AREAS (GRASS), INSTALL VALVE AT A DEPTH TO ALLOW A 6" MINIMUM DISTANCE BETWEEN THE VALVE COVER AND THE TOP OF THE VALVE OPERATING NUT. OPERATING NUT/STEM EXTENSION SHALL BE PROVIDED (WHERE APPLICABLE) SO THAT THE OPERATING NUT WILL BE NO MORE THAN 30 INCHES BELOW FINISHED GRADE.
5. FOR NEW CONSTRUCTION, THE VALVE BOX SHALL BE ADJUSTED TO MIDRANGE TO ALLOW FOR FUTURE BOX ADJUSTMENTS. ROUTE LOCATE WIRES THRU A "V" CUT IN THE TOP OF THE 6" PVC RISER PIPE FOR LOCATE WIRE ACCESS INTO VALVE BOX. THE LOCATE WIRES WITH A 24" LONG PIG-TAIL AT THE TOP SHALL BE CONNECTED TOGETHER WITH A WIRE NUT.
6. BRASS IDENTIFICATION TAG INDICATING "WATER", VALVE SIZE, DIRECTION AND TURNS TO OPEN & VALVE TYPE. PROVIDE A ¼" HOLE IN BRASS TAG AND ATTACH TAG (TWIST WIRE AROUND TAG) TO THE END OF THE LOCATE WIRE. TAGS ARE NOT REQUIRED ON VALVES INSTALLED ON FIRE HYDRANT BRANCH LINES.
7. IN LIEU OF PRECAST CONCRETE PAD, A 6" THICK X 24" (ROUND OR SQUARE) POURED CONCRETE PAD W/2 - #4 REBAR AROUND PERIMETER, MAY BE USED.
8. GRAVEL SHALL BE PROVIDED UNDER ALL VALVES 20" AND LARGER. THE MINIMUM VERTICAL LIMIT OF GRAVEL IS 12" UNDER THE VALVE UP TO ⅓ THE OVERALL HEIGHT OF THE VALVE.
9. FOR VALVES 12 INCH AND SMALLER, PROVIDE A WHITE OR BLACK PLASTIC DEBRIS SHIELD WHICH INSTALLS BELOW THE OPERATING NUT. THIS SHIELD SHALL CENTER THE RISER PIPE BOX OVER THE OPERATING NUT AND MINIMIZE INFILTRATION. SHIELD SHALL BE BY AFC, BOXLOK OR APPROVED EQUAL.
10. ALL VALVES SHALL BE INSTALLED WITH AN ELECTRIC LOCATE MARKER. MARKER SHALL BE 4" DIA. COLOR CODED BALL MARKER (3M-1403XR FOR WATER AND 1408XR FOR RECLAIMED WATER).

WATER VALVE INSTALLATION DETAIL

JANUARY 2019 PLATE W-18

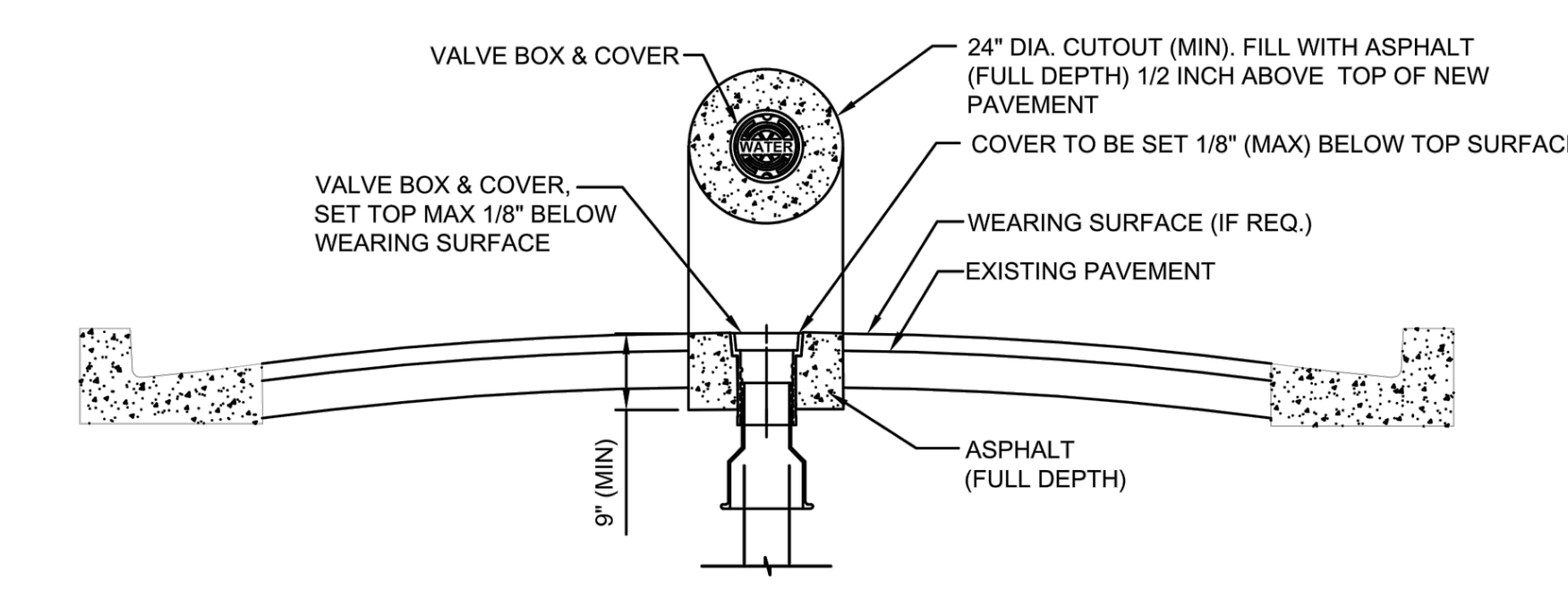

NOTES :

1. PROVIDE FULL DEPTH ASPHALT 1/2 INCH ABOVE TOP OF NEW PAVEMENT LEVEL, TO ALLOW FOR FUTURE ASPHALT MATERIAL COMPACTION. PLACE AND COMPACT ASPHALT IN 2" (MAX) LIFTS.

WATER VALVE JACKET ADJUSTED TO ROADWAY AFTER RE-SURFACING

JANUARY 2019 PLATE W-19

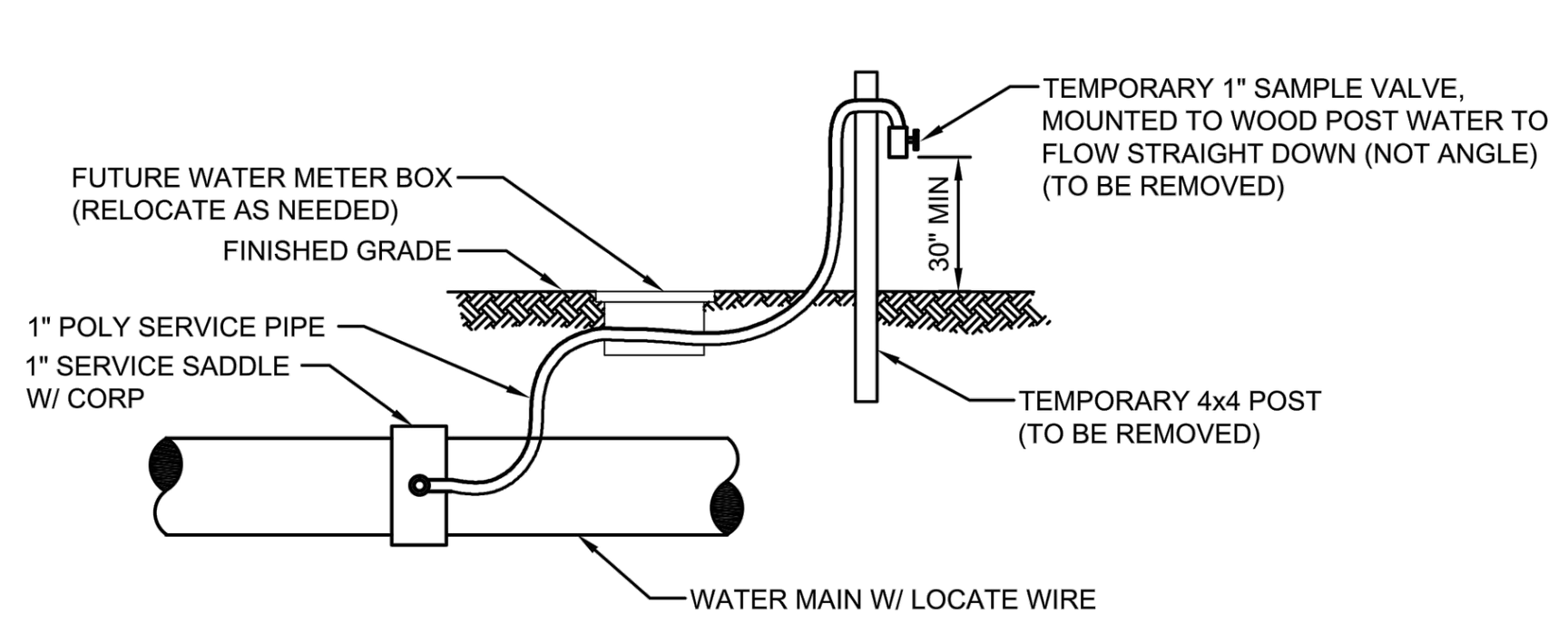

TEMPORARY SAMPLE TAP UTILIZING A NEW 1" WATER SERVICE

NOTES::

1. LOCATION OF SAMPLE POINT BIBB SHALL NOT BE WITHIN THE ROADWAY BUT ROUTED TO THE ROAD SHOULDERS.
2. THE CONTRACTOR SHALL BE RESPONSIBLE FOR THE REMOVAL OF ALL TEMPORARY PIPING & FITTINGS (AS NOTED) AFTER BACTERIOLOGICAL CLEARANCE IS RECEIVED.
3. THE CONTRACTOR SHALL UTILIZE THE ABOVE ALTERNATIVE METHODS FOR CONSTRUCTION OF TEMPORARY SAMPLE POINTS IN ALL AREAS, WHERE POSSIBLE.
4. THE CONTRACTOR SHALL COMPLY WITH ALL JEA RULES AND POLICIES AS OUTLINED BY THE JEA'S ENVIRONMENTAL RESPONSE COORDINATOR (ERC) AND OTHER ASSOCIATED JEA STANDARDS.

TEMPORARY SAMPLE TAP ALTERNATIVE METHOD A

JANUARY 2019 PLATE W-24

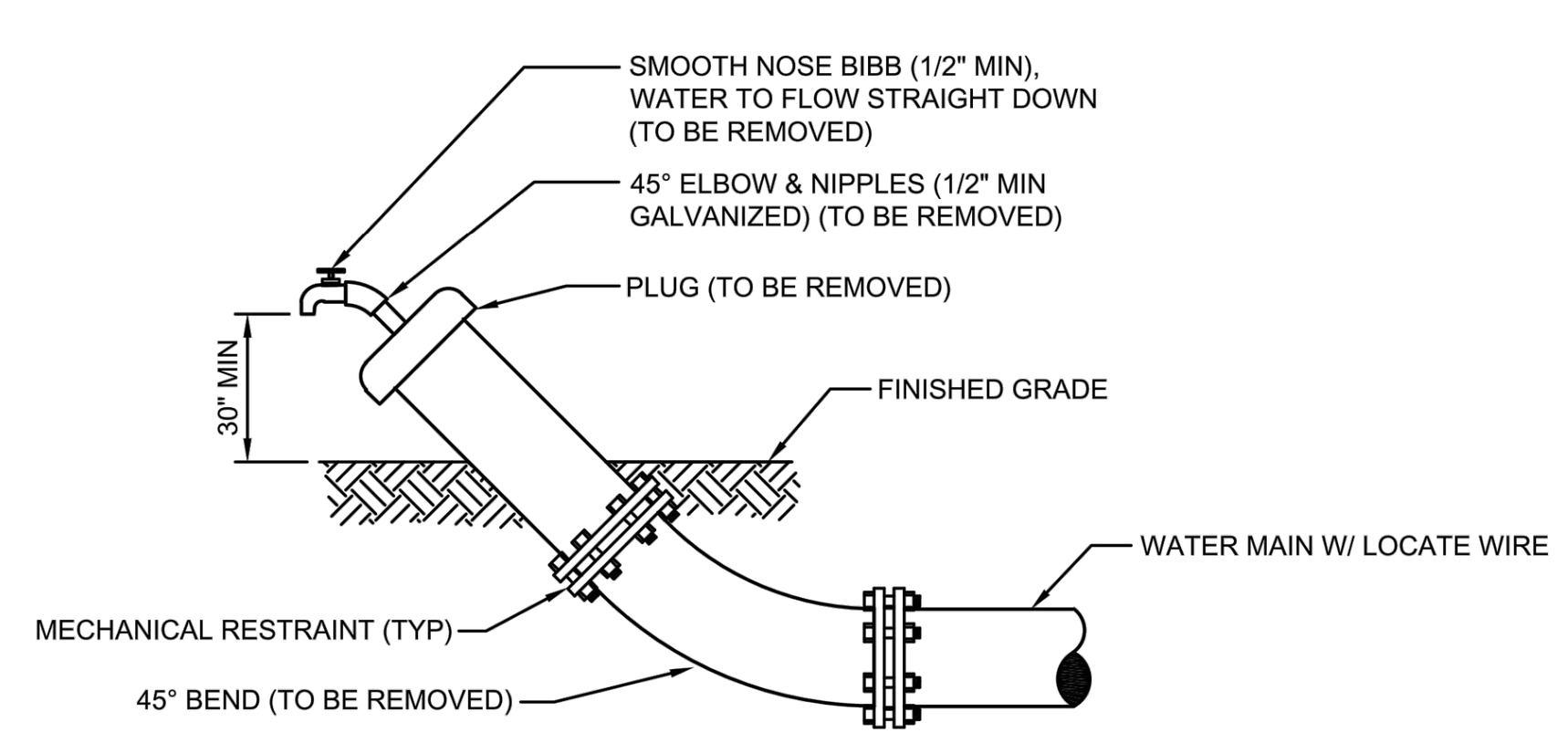

TEMPORARY SAMPLE TAP UTILIZING PLUG AT FLUSHING LOCATION

NOTES::

1. LOCATION OF SAMPLE POINT BIBB SHALL NOT BE WITHIN THE ROADWAY BUT ROUTED TO THE ROAD SHOULDERS.
2. THE CONTRACTOR SHALL BE RESPONSIBLE FOR THE REMOVAL OF ALL TEMPORARY PIPING & FITTINGS (AS NOTED) AFTER BACTERIOLOGICAL CLEARANCE IS RECEIVED.
3. THE CONTRACTOR SHALL UTILIZE THE ABOVE ALTERNATIVE METHODS FOR CONSTRUCTION OF TEMPORARY SAMPLE POINTS IN ALL AREAS, WHERE POSSIBLE.
4. THE CONTRACTOR SHALL COMPLY WITH ALL JEA RULES AND POLICIES AS OUTLINED BY THE JEA'S ENVIRONMENTAL RESPONSE COORDINATOR (ERC) AND OTHER ASSOCIATED JEA STANDARDS.

TEMPORARY SAMPLE TAP ALTERNATIVE METHOD B

JANUARY 2019 PLATE W-24A

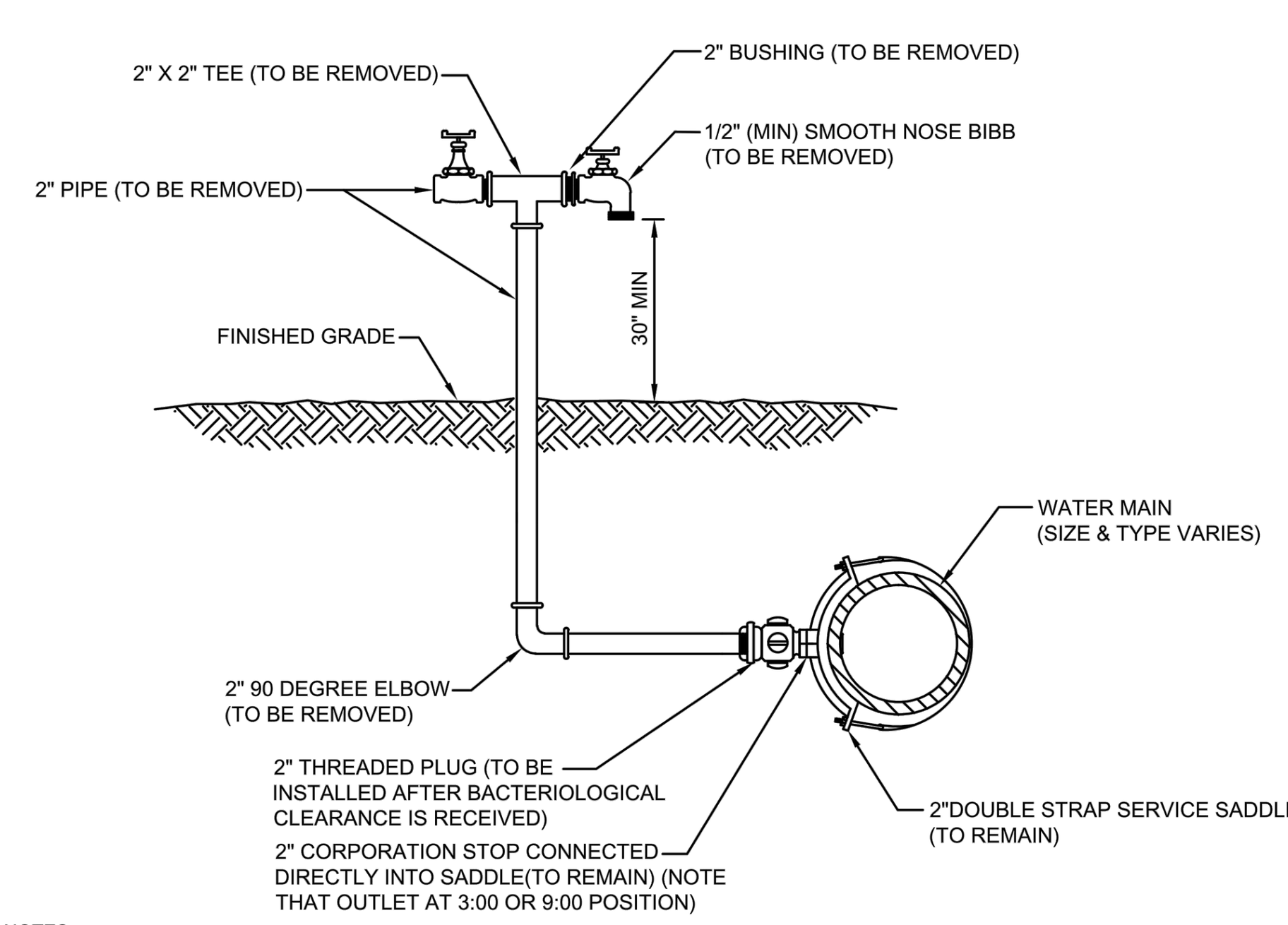

NOTES:

1. LOCATION OF SAMPLE POINT BIBB SHALL NOT BE WITHIN THE ROADWAY BUT ROUTED TO THE ROADWAY SHOULDERS (NON-TRAFFIC AREAS).
2. ALL PIPE & FITTING SHALL BE GALVANIZED MATERIAL OR PVC (S-40).
3. THE CONTRACTOR SHALL BE RESPONSIBLE FOR THE REMOVAL OF ALL TEMPORARY PIPING & FITTING (AS NOTED) AFTER BACTERIOLOGICAL CLEARANCE IS RECEIVED
4. THE CONTRACTOR SHALL COMPLY WITH ALL JEA RULES AND POLICES AS OUTLINED BY THE JEA'S ENVIRONMENTAL RESPONSE COORDINATOR (ERC) AND OTHER ASSOCIATED JEA STANDARDS.

2" TEMPORARY SAMPLE TAP FOR STUB OUT

JANUARY 2019 PLATE W-26

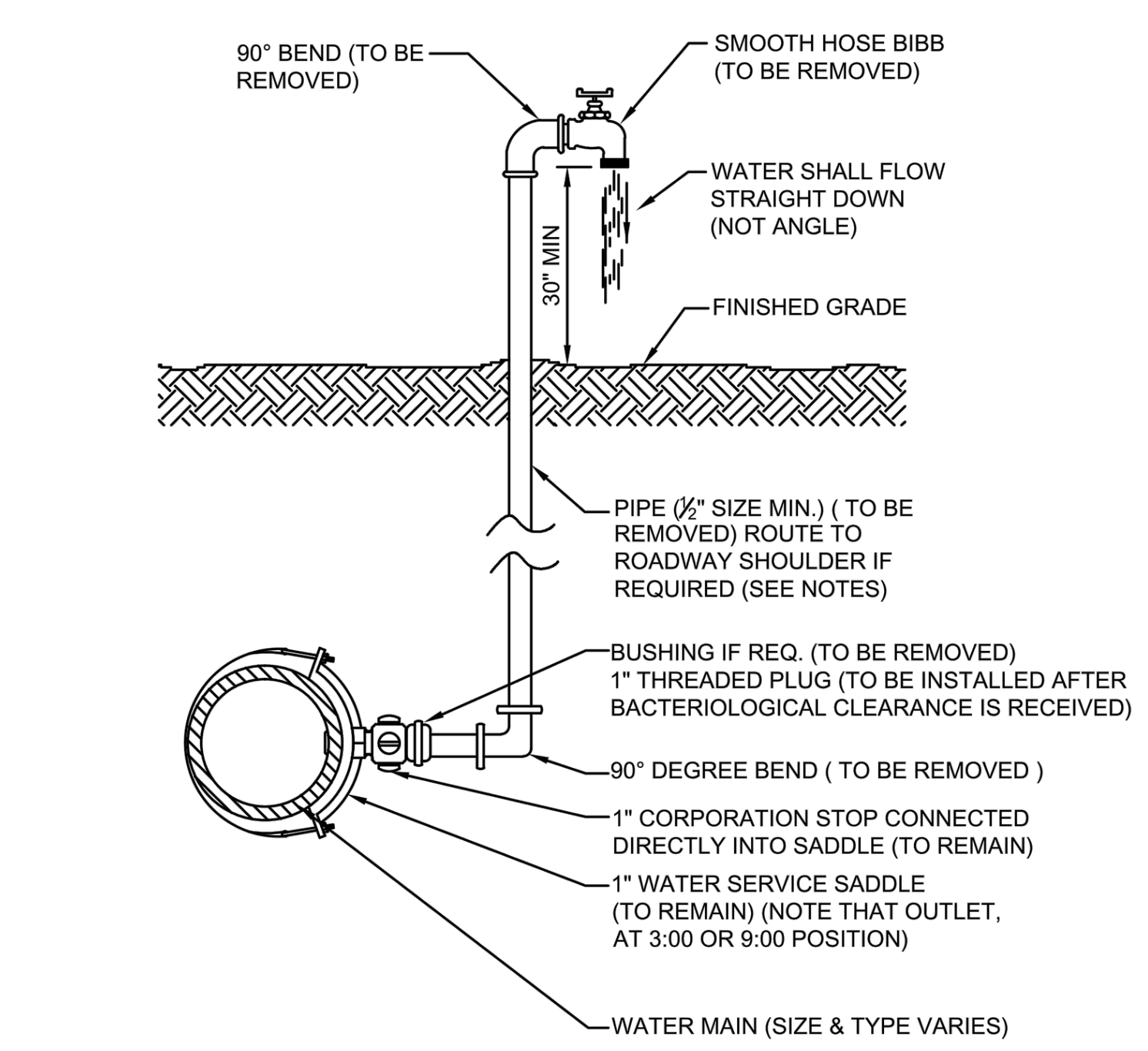

NOTES:

1. LOCATION OF SAMPLE POINT BIBB SHALL NOT BE WITHIN THE ROADWAY BUT ROUTED TO THE ROADWAY SHOULDERS (NON-TRAFFIC AREAS).
2. THE CONTRACTOR SHALL BE RESPONSIBLE FOR THE REMOVAL OF ALL TEMPORARY PIPING & FITTINGS (AS NOTED), AFTER BACTERIOLOGICAL CLEARANCE IS RECEIVED.
3. PIPE AND FITTINGS SHALL BE PVC (SCH. 40) OR GALV. MATERIAL.
4. THE USE OF THE ABOVE CONSTRUCTION FOR A TEMPORARY SAMPLE POINT SHALL BE LIMITED TO AREAS WHERE A SAMPLE TAP BY ALTERNATIVE METHODS (SEE W-24) IS NOT FEASIBLE OR IF DIRECTED OTHERWISE BY JEA.
5. THE CONTRACTOR SHALL COMPLY WITH ALL JEA RULES AND POLICIES AS AS OUTLINED BY JEA'S ENVIRONMENTAL RESPONSE COORDINATOR (ERC) AND OTHER ASSOCIATED JEA STANDARDS.

TEMPORARY SAMPLE TAP

JANUARY 2019 PLATE W-25

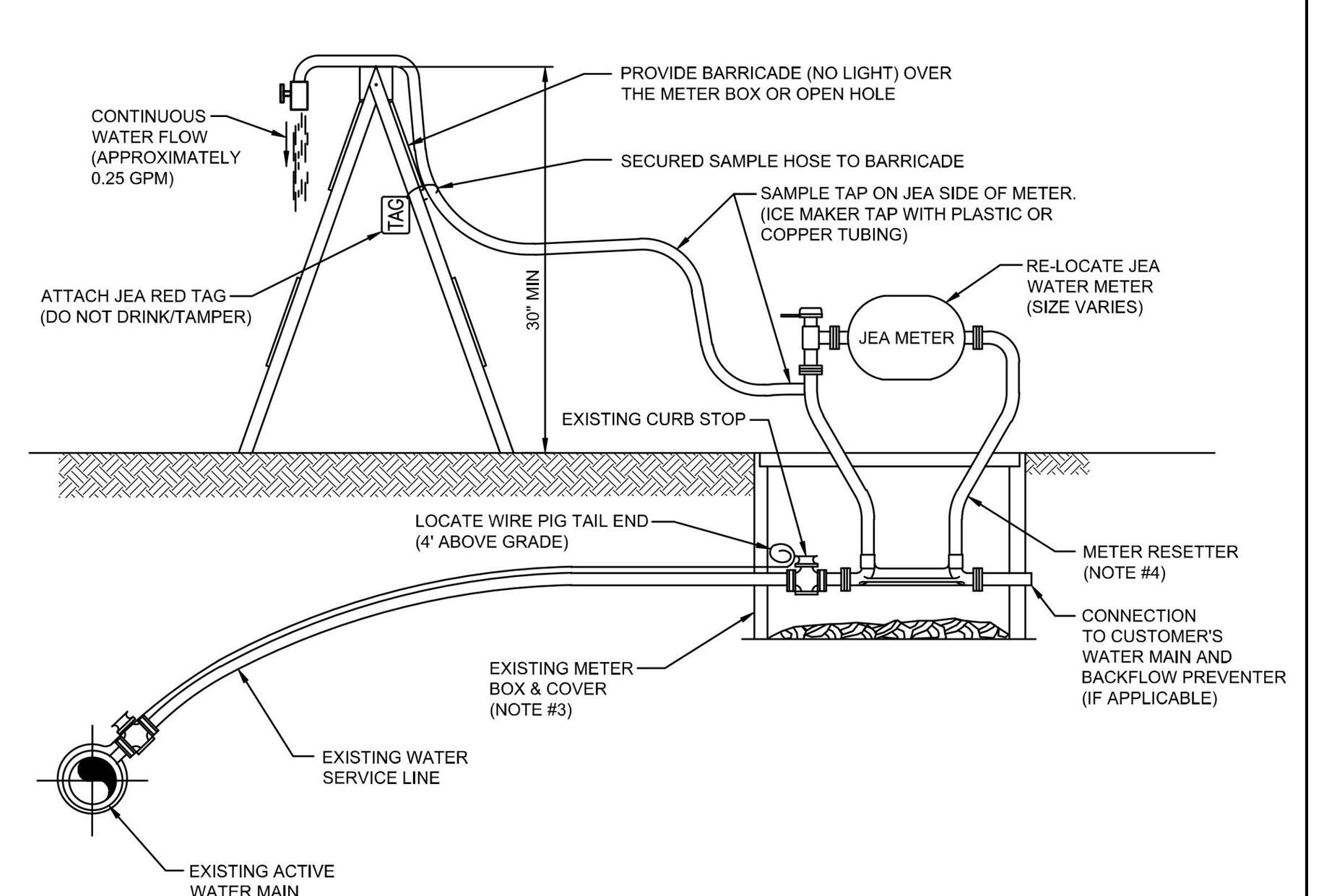

NOTES :

1. THE ABOVE TEMPORARY WATER SAMPLE TAP IS FOR USE ON ACTIVE WATER MAINS. GENERALLY, THIS SAMPLE TAP IS INSTALLED ADJACENT TO EACH WATER MAIN VALVE BEING CLOSED DURING A WATER OUTAGE. WHEN REQUIRED, THE CONTRACTOR SHALL PROVIDE THE ABOVE TEMPORARY SAMPLE TAP AND THEN REMOVE/RESTORE THE WATER METER SERVICE AFTER BACTERIOLOGICAL CLEARANCE.
2. THE CONTRACTOR SHALL COMPLY WITH ALL JEA RULES AND POLICIES AS OUTLINED BY THE JEA'S ENVIRONMENTAL RESPONSE COORDINATOR (ERC) AND OTHER ASSOCIATED JEA STANDARDS. THESE SERVICES SHALL INCLUDE, AT A MINIMUM, ASSISTANCE WITH OUTAGE SIMULATIONS, ASSISTANCE WITH THE PREPARATION OF CUSTOMER NOTIFICATION AND OR BOIL WATER NOTICES, DISTRIBUTION OF CUSTOMER NOTIFICATIONS AND COORDINATION WITH ERC AND THE JEA ON-SITE REPRESENTATIVES.
3. CONTRACTOR SHALL REMOVE METER BOX LID AND SET IT NEXT TO THE BOX. THE CONTRACTOR SHALL REPAIR, AT THE CONTRACTORS EXPENSE, ANY DAMAGE TO THE ELECTRONIC NMR/MTU IF DAMAGED DURING THE ABOVE BACTERIOLOGICAL TEST PERIOD AND REMOVED AFTER BACTERIOLOGICAL CLEARANCE.
4. A METER "RESETTER" SHALL BE INSTALLED AND REMOVED AFTER BACTERIOLOGICAL CLEARANCE AS SHOWN. THE RESETTER SHALL INCLUDE AN ANGLED INVERTED KEY METER VALVE ON THE INLET, METER COUPLINGS, 12-INCH RISE AND SIZED TO FIT THE ACTUAL FIELD METER THREADS. ACCEPTABLE: FORD 40 SERIES, MUELLER H-14118 OR JEA APPROVED EQUAL.

TEMPORARY SAMPLE TAP FOR IN-SERVICE MAINS

JANUARY 2019 PLATE W-27

JonesEdmunds
CERTIFICATE OF AUTHORIZATION #1841
730 NE WALDO ROAD, GAINESVILLE, FLORIDA 32641 / (352) 377-5821
8657 BAYPINE ROAD SUITE 300, JACKSONVILLE, FL 32256 / (904) 744-5401

NO.	BY	DATE	REVISIONS
6.			
5.			
4.			
3.			
2.			
1.			

DESIGN ENGINEER
KENNETH A. FRASER, PE
FLORIDA REGISTRATION NO.
57452

DESIGNER:	KFRASER
DRAWN BY:	RWADE
DATE:	MARCH 30, 2020
CHECKED BY:	HBRIDGES
DATE:	MARCH 30, 2020

JEA sm Building Community sm

BOULEVARD FORCE MAIN AND WATER MAIN REPLACEMENT JEA STANDARD DETAILS

PROJ. NO. 09302-055-01
DATE: MARCH 30, 2020
SCALE: NONE

NO. SHEETS 35
SHEET NO. 17
DRAWING NO. D5

Y:\09302-jea\Projects\055-01 boulevard fm & wm replacement\CAD\Dwgs\Details\0930205501-D05.dwg Current Layout Tab = D5 Fri Mar 27, 2020 - 15:58
Xrefs Attached= XR055-G-18 [..\Xref\general\XR055-G-18.dwg]

xrefs Attached= XR055-G-1B [..\xref\general\XR055-G-1B.dwg]
Y:\09302-jea\Projects\055-01 boulevard fm & wm replacement\CAD\Dwgs\Details\0930205501-D06.dwg   Current Layout Tab = D6   Fri Mar 27, 2020 - 15:58

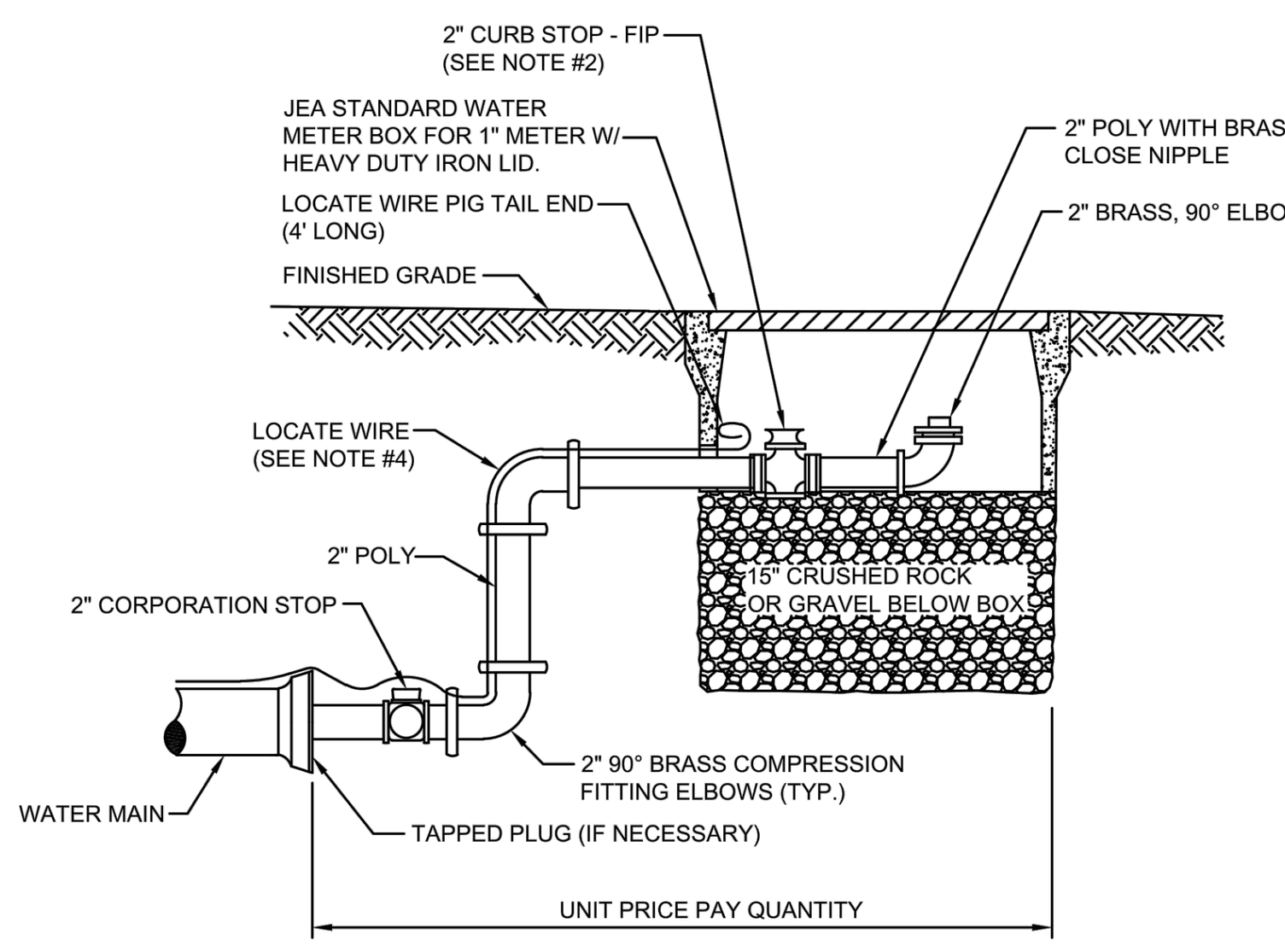

NOTES:

1. PIPE SHALL BE POLYETHYLENE. FITTINGS SHALL BE BRASS.
2. THE 2" CURB STOP SHALL BE ALL BRONZE. FITTINGS SHALL BE BRASS.
3. ANY RECLAIMED WATER VALVE SHALL HAVE RECLAIMED EMBLEM.
4. LOCATE WIRE FOR 10' OR GREATER IN LENGTH.
5. CANNOT BE PLACED UNDER CONCRETE OR PAVEMENT.
6. PLACE 2 FEET PAST LAST WATER MAIN SERVICE CONNECTION.

FLUSHING VALVE BELOW GRADE

JANUARY 2019 PLATE W-28

PVC PIPE RESTRAINT NOTES:

1. THIS SCHEDULE SHALL BE UTILIZED ON ALL WATER, SEWER FORCE MAIN OR RECLAIMED WATER SYSTEMS. ALL FITTINGS SHALL BE RESTRAINED TO LENGTHS INDICATED ON THE ABOVE SCHEDULE, AT A MINIMUM.
2. ASSUMPTIONS: PVC PIPE, SAFETY FACTOR=1.5, TEST PRESSURE=150PSI, SOIL=GM OR SM, TRENCH TYPE 3, DEPTH OF COVER=30 INCHES FOR 20" AND SMALLER PIPE SIZE OR 36 INCHES FOR 24" AND LARGER PIPE SIZE.
3. BENDS AND VALVES: SHALL BE RESTRAINED ON EACH SIDE OF FITTING.
4. VERTICAL OFFSETS: ARE APPROX. 3 FEET COVER ON TOP AND APPROX. 8 FEET COVER ON BOTTOM. PER THE DETAILS, Lu IS THE RESTRAINED LENGTH FOR THE UPPER (TOP) LEVEL. Li IS THE RESTRAINED LENGTH FOR THE LOWER (DEEPER) LEVEL. ASSUME 45 DEGREE BENDS.
5. TEES: TOTAL LENGTH BETWEEN FIRST JOINTS OR RESTRAINED LENGTH ON EITHER SIDE OF TEE (RUN) SHALL BE A TOTAL DISTANCE OF 30 FEET (MIN). SEE SCHEDULE ABOVE FOR RESTRAINT LENGTH ON TEE "BRANCH" LINE.
6. HDPE TO PVC TRANSITIONS: THE PVC PIPE SIDE SHALL BE RESTRAINED 35 FT (MIN).
7. THE INSTALLATION OF BELL HARNESS RESTRAINTS AT PVC JOINTS (DR-18 & 25 PIPE) SHALL BE COMPLETED PER THE MANUFACTURERS RECOMMENDATION, WHICH INCLUDES NOT OVER TIGHTENING THE PARALLEL RODS/NUTS. THESE NUTS SHOULD ONLY BE SNUG TIGHT. THE HOME MARKS ON THE PIPE SHOULD ALWAYS BE VISIBLE AFTER THE RESTRAINT IS INSTALLED. OVERHOMING THE JOINT MAY CAUSE A FAILURE AT THE BELL RESULTING IN A SERVICE OUTAGE.

LENGTH (L) TO BE RESTRAINED (SEE PLATE Nos. 38C & 38D FOR ADDITIONAL DETAILS)

NOMINAL PIPE SIZE (IN.)	HORIZONTAL BENDS 90° BENDS L (FT.)	45° BENDS L (FT.)	22.5° BENDS L (FT.)	11.25° BENDS L (FT.)	VERTICAL OFFSETS 45° BENDS (SEE NOTE 4) UPPER L (FT.)	LOWER L (FT.)	VALVES OR DEAD ENDS L (FT.)
4	21	9	5	3	17	3	47
6	30	13	6	3	23	4	66
8	38	16	8	4	30	6	86
10	45	19	9	5	36	7	103
12	53	22	11	6	43	8	121
14	61	26	13	6	50	9	140
16	66	28	14	7	55	10	154
18	73	30	15	8	60	11	170
20	79	33	16	8	66	12	186
24	79	33	16	8	77	15	185
30	93	39	19	10	97	17	222
36	106	39	21	11	107	20	257
42	117	49	24	12	120	24	289
48	144	53	26	13	133	26	321

REDUCERS SIZE (IN.)	L (FT.)
6x4	34
8x6	36
8x4	62
10x8	35
10x6	63
12x10	36
12x8	64
16x12	66
16x10	92
20x18	35
20x16	66
20x12	117
24x20	56
24x18	80
24x16	101
30x24	78
30x20	121
36x30	78
36x24	141
42x36	75
42x30	140
48x42	75
48x36	139

TEES SEE NOTE 5 RUN SIZE (IN.)	BRANCH SIZE (IN.)	L (FT.)
4	4	F.O.
4	6	10
	4 < LESS	F.O.
8	8	29
	6 < LESS	F.O.
10	10	45
	8	13
	6 < LESS	F.O.
12	12	62
	10	32
	8 < LESS	F.O.
16	16	94
	12	39
	10	5
	10 < LESS	F.O.
20	20	125
	16	76
	12	14
	10 < LESS	F.O.
24	24	124
	20	84
	16	36
	12 < LESS	F.O.
30	30	159
	24	104
	20	60
	16	5
	16 < LESS	F.O.
36	36	192
	30	142
	24	83
	20	33
	16 < LESS	F.O.
42	42	223
	36	178
	30	124
	24	59
	20	5
	16 < LESS	F.O.
48	48	253
	42	209
	36	162
	30	104
	24	34
	20 < LESS	F.O.

F.O. = FITTING ONLY

PVC PIPE RESTRAINT JOINT SCHEDULE

JANUARY 2019 PLATE W-31A

DUCTILE IRON PIPE RESTRAINT NOTES:

1. THIS SCHEDULE SHALL BE UTILIZED ON ALL WATER, SEWER FORCE MAIN OR RECLAIMED WATER SYSTEMS. ALL FITTINGS SHALL BE RESTRAINED TO LENGTHS INDICATED ON THE ABOVE SCHEDULE, AT A MINIMUM.
2. ASSUMPTIONS: DUCTILE IRON PIPE (WITHOUT POLY WRAP), SAFETY FACTOR=1.5, TEST PRESSURE=150PSI, SOIL=GM OR SM, TRENCH TYPE 3, DEPTH OF COVER=30 INCHES FOR 20" AND SMALLER PIPE SIZE OR 36 INCHES FOR 24" AND LARGER PIPE SIZE. FOR D.I.P. W/POLY WRAP, USE RESTRAINT JOINT SCHEDULE FOR PVC PIPE.
3. BENDS AND VALVES: SHALL BE RESTRAINED ON EACH SIDE OF FITTING.
4. VERTICAL OFFSETS: ARE APPROX. 3 FEET COVER ON TOP AND APPROX. 8 FEET COVER ON BOTTOM. PER THE DETAILS, Lu IS THE RESTRAINED LENGTH FOR THE UPPER (TOP) LEVEL. Li IS THE RESTRAINED LENGTH FOR THE LOWER (DEEPER) LEVEL. ASSUME 45 DEGREE BENDS.
5. TEES: TOTAL LENGTH BETWEEN FIRST JOINTS OR RESTRAINED LENGTH ON EITHER SIDE OF TEE (RUN) SHALL BE A TOTAL DISTANCE OF 30 FEET (MIN). SEE SCHEDULE ABOVE FOR RESTRAINT LENGTH ON TEE "BRANCH" LINE.
6. HDPE TO D.I.P. TRANSITIONS: THE D.I.P. PIPE SIDE SHALL BE RESTRAINED 35 FT (MIN).

LENGTH (L) TO BE RESTRAINED (SEE PLATE Nos. 38C & 38D FOR ADDITIONAL DETAILS)

NOMINAL PIPE SIZE (IN.)	HORIZONTAL BENDS 90° BENDS L (FT.)	45° BENDS L (FT.)	22.5° BENDS L (FT.)	11.25° BENDS L (FT.)	VERTICAL OFFSETS 45° BENDS (SEE NOTE 4) UPPER L (FT.)	LOWER L (FT.)	VALVES OR DEAD ENDS L (FT.)
4	17	7	4	2	11	3	30
6	24	15	5	3	15	4	42
8	31	13	6	3	20	5	55
10	36	15	8	4	23	6	65
12	42	18	9	5	27	7	77
14	48	20	10	5	31	7	87
16	53	22	11	6	35	8	97
18	58	24	12	6	39	9	107
20	63	27	13	6	42	10	118
24	63	27	13	7	49	12	118
30	75	31	15	8	59	14	141
36	86	36	17	9	68	17	163
42	95	40	19	10	76	19	183
48	117	43	21	11	84	21	203

REDUCERS SIZE (IN.)	L (FT.)
6x4	22
8x6	23
8x4	39
10x8	22
10x6	40
12x10	23
12x8	41
16x12	42
16x10	58
20x18	22
20x16	42
20x12	74
24x20	36
24x18	51
24x16	64
30x24	50
30x20	77
36x30	50
36x24	89
42x36	48
42x30	89
48x42	48
48x36	88

TEE SEE NOTE 5 RUN SIZE (IN.)	BRANCH SIZE (IN.)	L (FT.)
4	4	F.O.
4	6	6
	4 < LESS	F.O.
8	8	19
	6 < LESS	F.O.
10	10	29
	8	9
	6 < LESS	F.O.
12	12	40
	10	21
	8 < LESS	F.O.
16	16	60
	12	25
	10	3
	8 < LESS	F.O.
20	20	79
	16	48
	12	9
	10 < LESS	F.O.
24	24	79
	20	54
	16	23
	12 < LESS	F.O.
30	30	101
	24	66
	20	38
	16	4
	12 < LESS	F.O.
36	36	122
	30	90
	24	53
	20	21
	16	1
	12 < LESS	F.O.
42	42	141
	36	113
	30	79
	24	38
	20	3
	16	1
	12 < LESS	F.O.
48	48	160
	42	133
	36	103
	30	66
	24	22
	20 < LESS	F.O.

F.O. = FITTING ONLY

DUCTILE IRON PIPE RESTRAINT JOINT SCHEDULE

JANUARY 2019 PLATE W -31B

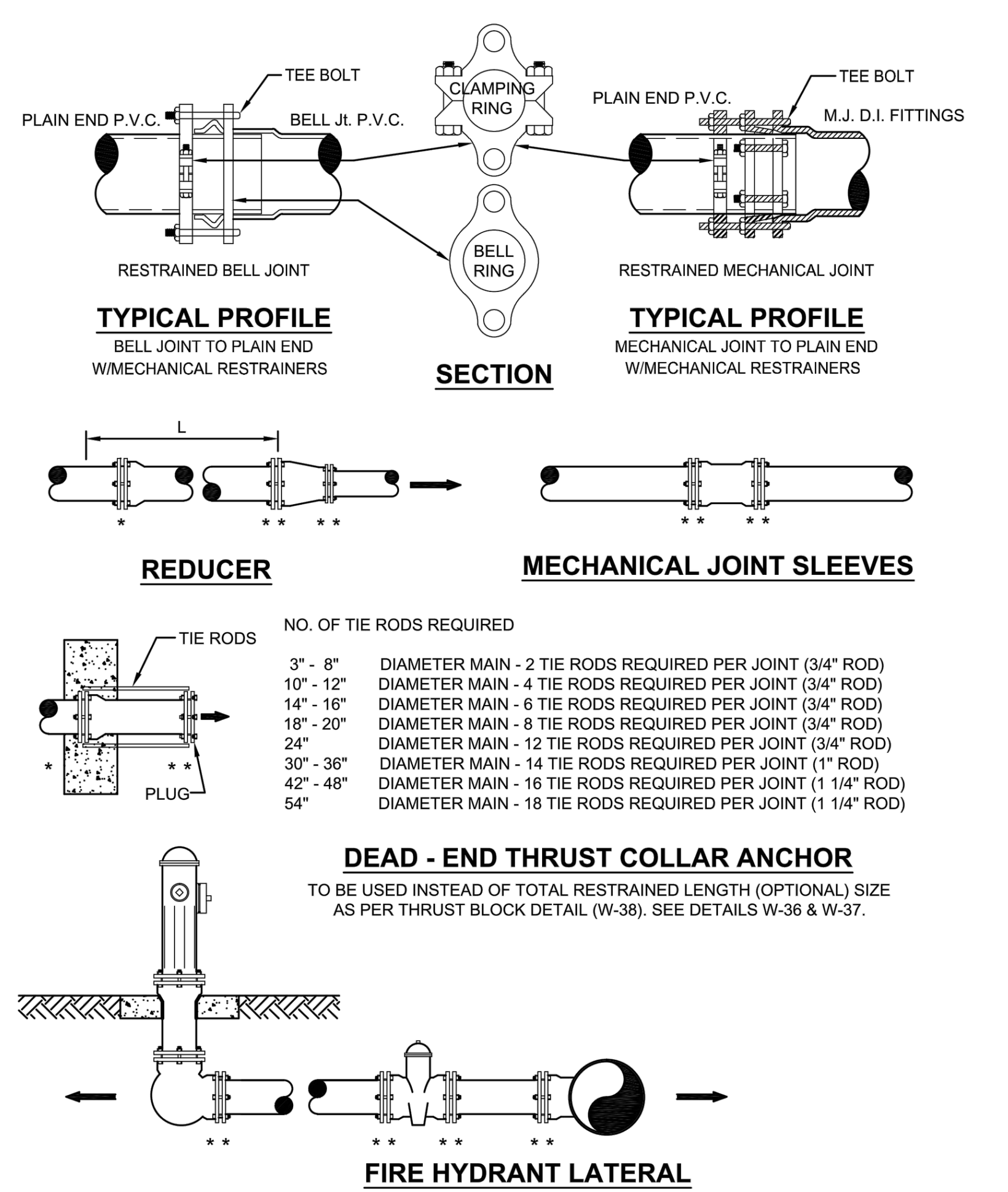

NO. OF TIE RODS REQUIRED

3" - 8"	DIAMETER MAIN - 2 TIE RODS REQUIRED PER JOINT (3/4" ROD)
10" - 12"	DIAMETER MAIN - 4 TIE RODS REQUIRED PER JOINT (3/4" ROD)
14" - 16"	DIAMETER MAIN - 6 TIE RODS REQUIRED PER JOINT (3/4" ROD)
18" - 20"	DIAMETER MAIN - 8 TIE RODS REQUIRED PER JOINT (3/4" ROD)
24"	DIAMETER MAIN - 12 TIE RODS REQUIRED PER JOINT (3/4" ROD)
30" - 36"	DIAMETER MAIN - 14 TIE RODS REQUIRED PER JOINT (1" ROD)
42" - 48"	DIAMETER MAIN - 16 TIE RODS REQUIRED PER JOINT (1 1/4" ROD)
54"	DIAMETER MAIN - 18 TIE RODS REQUIRED PER JOINT (1 1/4" ROD)

DEAD - END THRUST COLLAR ANCHOR

TO BE USED INSTEAD OF TOTAL RESTRAINED LENGTH (OPTIONAL) SIZE AS PER THRUST BLOCK DETAIL (W-38). SEE DETAILS W-36 & W-37.

GENERAL NOTE:

1. PAY ITEM " * " DENOTES A RESTRAINT WHICH IS PAID FOR ON A PER EACH BASIS.
2. PAY ITEM " ** " DENOTES A RESTRAINT WHICH IS INCLUDED IN THE UNIT PRICE BID FOR FITTING OR VALVE.
3. ➡ INDICATES DIRECTION OF THRUST FORCE.

MECHANICAL RESTRAINT DETAILS - I

JANUARY 2019 PLATE W-31C

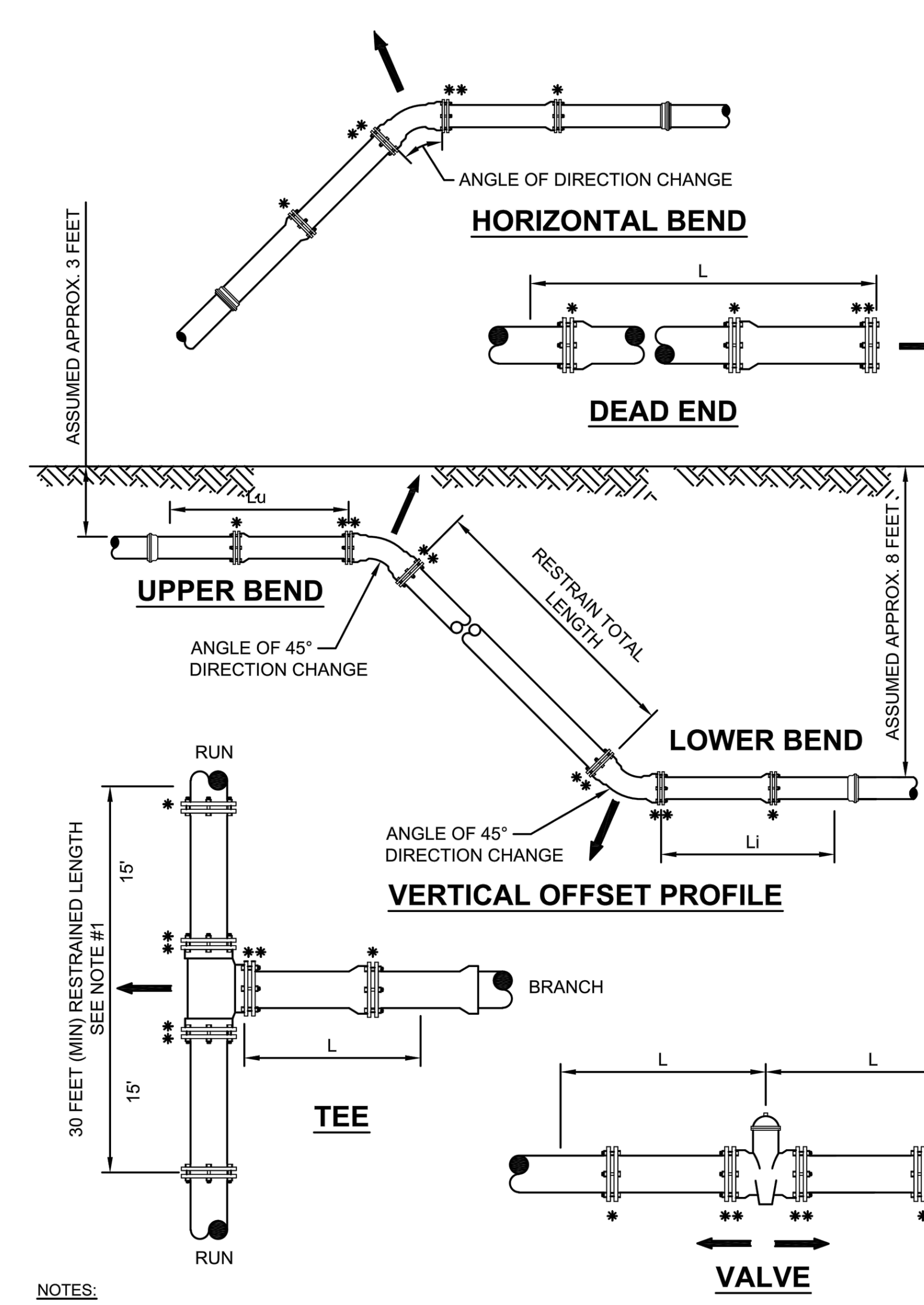

NOTES:

1. TOTAL LENGTH BETWEEN FIRST JOINTS OR RESTRAINED LENGTH ON EITHER SIDE OF TEE (RUN) SHALL BE A TOTAL DISTANCE OF 30 FEET (MIN.).
2. PAY ITEM "*" DENOTES A RESTRAINT WHICH IS PAID FOR ON A PER EACH BASIC.
3. PAY ITEM "**" DENOTES A RESTRAINT WHICH IS INCLUDED IN THE UNIT PRICE BID FOR FITTING OR VALVE.

MECHANICAL RESTRAINT DETAILS - II

JANUARY 2019 PLATE W-31D

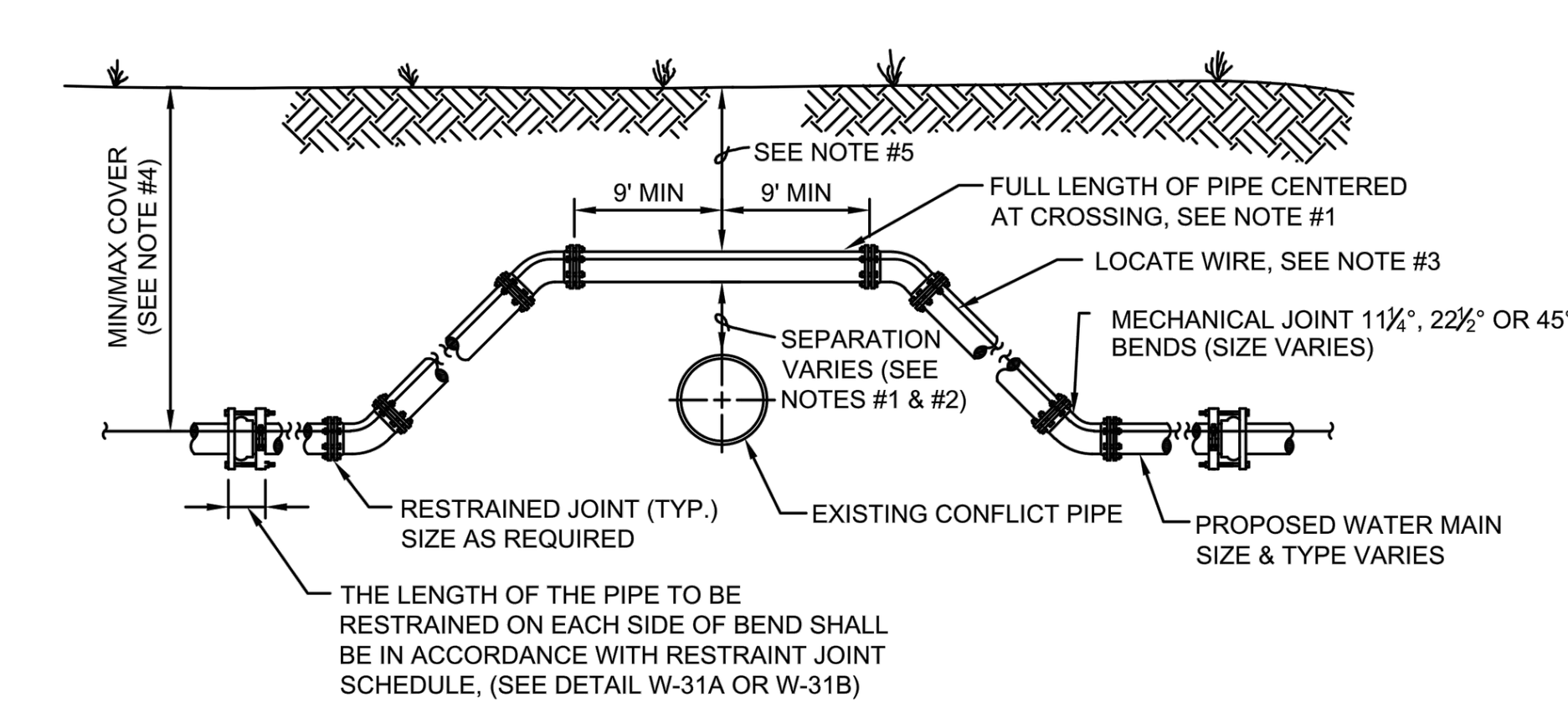

CASE "A" CROSSING

NOTES:

1. THE SOILS BETWEEN THE NEW MAIN AND THE CONFLICT PIPE SHALL BE COMPACTED TO 98% OF THE MAXIMUM DENSITY AS DETERMINED BY THE LABORATORY MODIFIED PROCTOR TEST, ASTM D 1557.
2. FOR MINIMUM VERTICAL SEPARATION REQUIREMENTS SEE DETAIL (W-10 AND W-11).
3. LOCATING WIRE REQUIRED: SEE DETAIL W-44.
4. THE COVER FOR PIPING LESS THAN 24" SIZE SHALL BE 30" (MIN) IN UNPAVED AREAS, 36" (MIN) IN PAVED AREAS AND A MAXIMUM COVER OF 60", UNLESS APPROVED BY JEA. THE COVER FOR PIPING 24" SIZE AND LARGER SHALL BE 36" (MIN) IN PAVED AND UNPAVED AREAS AND A MAXIMUM COVER OF 84", UNLESS APPROVED BY JEA.
5. IF UTILITY CONFLICT IS LOCATED IN A NON-TRAFFIC AREA (NO TRAFFIC LOADS) AND THE NEW PIPE IS D.I.P., THEN THE MINIMUM COVER MAY BE REDUCED TO 24 INCHES (ONLY IN THE AREA OF THE CONFLICT).

ADJUSTMENT OVER EXISTING UTILITIES MECHANICAL RESTRAINTS

JANUARY 2019 PLATE W-32

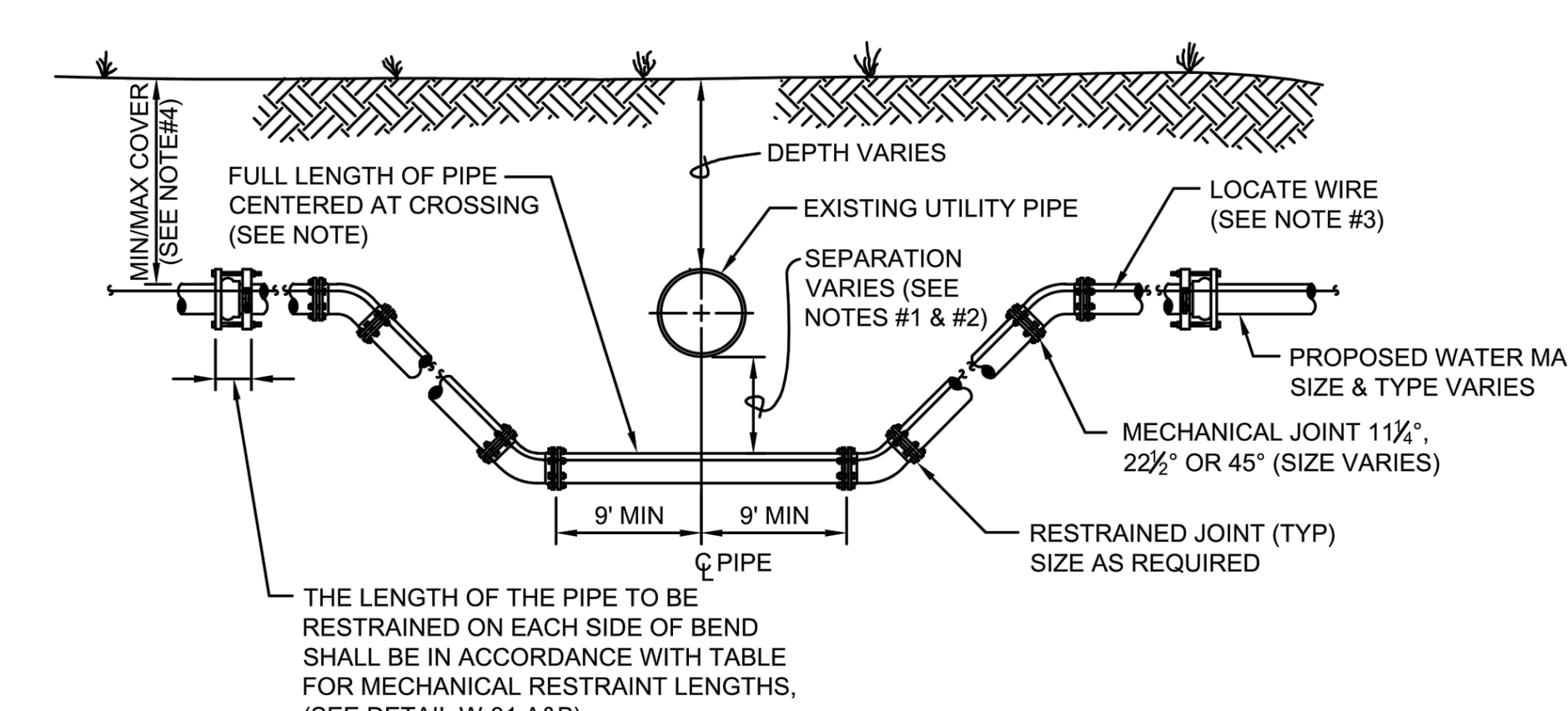

CASE "B" CROSSING

NOTES:

1. THE SOILS BETWEEN THE NEW MAIN AND THE CONFLICT PIPE SHALL BE COMPACTED TO 98% OF THE MAXIMUM DENSITY AS DETERMINED BY THE LABORATORY MODIFIED PROCTOR TEST, ASTM D 1557
2. FOR MINIMUM VERTICAL SEPARATION REQUIREMENTS SEE DETAILS (W-10 AND W-11)
3. LOCATING WIRE REQUIRED: SEE DETAIL W-44.
4. THE COVER FOR PIPING LESS THAN 24" SIZE SHALL BE 30" (MIN) IN UNPAVED AREA, 36" (MIN) IN PAVED AREAS AND A MAXIMUM COVER OF 60", UNLESS APPROVED BY JEA. THE COVER FOR PIPING 24" SIZE AND LARGER SHALL BE 36" (MIN) IN PAVED AND UNPAVED AREAS AND A MAXIMUM COVER OF 84", UNLESS APPROVED BY JEA.

ADJUSTMENT UNDER EXISTING UTILITIES MECHANICAL RESTRAINTS

JANUARY 2019 PLATE W-34

JonesEdmunds
CERTIFICATE OF AUTHORIZATION #1841
730 NE WALDO ROAD, GAINESVILLE, FLORIDA 32641 / (352) 377-5821
8657 BAYPINE ROAD SUITE 300, JACKSONVILLE, FL 32256 / (904) 744-5401

NO.	BY	DATE	REVISIONS
6.			
5.			
4.			
3.			
2.			
1.			

DESIGN ENGINEER
KENNETH A. FRASER, PE
FLORIDA REGISTRATION NO. 57452

DESIGNER: KFRASER
DRAWN BY: RWADE
DATE: MARCH 30, 2020
CHECKED BY: HBRIDGES
DATE: MARCH 30, 2020

JEA Building Community

BOULEVARD FORCE MAIN AND WATER MAIN REPLACEMENT JEA STANDARD DETAILS

PROJ. NO. 09302-055-01
DATE: MARCH 30, 2020
SCALE: NONE

NO. SHEETS 35
SHEET NO. 18
DRAWING NO. D6

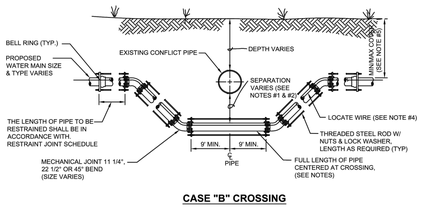

CASE "B" CROSSING

NOTES:

1. IF EXISTING CONFLICT PIPE IS A WATER MAIN, 12-INCHES OF SEPARATION IS REQUIRED. A FULL LENGTH OF PIPE SHALL BE CENTERED OVER EXISTING UTILITY MAIN TO PROVIDE MAXIMUM JOINT SPACING FOR ALL CROSSINGS.
2. FOR OTHER LOCATION LIMITATIONS SEE PLATE W-10 & W-11.
3. NUMBER OF TIE RODS REQUIRED IS AS FOLLOWS:

3" - 8"	DIAMETER MAIN - 2 TIE RODS REQUIRED PER JOINT (3/4" ROD)
10" - 12"	DIAMETER MAIN - 4 TIE RODS REQUIRED PER JOINT (3/4" ROD)
14" - 16"	DIAMETER MAIN - 6 TIE RODS REQUIRED PER JOINT (3/4" ROD)
18" - 20"	DIAMETER MAIN - 8 TIE RODS REQUIRED PER JOINT (3/4" ROD)
24"	DIAMETER MAIN -12 TIE RODS REQUIRED PER JOINT (3/4" ROD)
30" - 36"	DIAMETER MAIN -14 TIE RODS REQUIRED PER JOINT (1" ROD)
42" - 48"	DIAMETER MAIN -16 TIE RODS REQUIRED PER JOINT (1 1/4" ROD)
54"	DIAMETER MAIN -18 TIE RODS REQUIRED PER JOINT (1 1/4" ROD)

4. LOCATING WIRE REQUIRED: SEE PLATE W-44.
5. THE COVER FOR PIPING LESS THAN 24" SIZE SHALL BE 30" (MIN) IN UNPAVED AREAS, 36" (MIN) IN PAVED AREAS AND A MAXIMUM COVER OF 60", UNLESS PRE-APPROVED BY JEA. THE COVER FOR PIPING 24" SIZE AND LARGER SHALL BE 36" (MIN) IN PAVED AND UNPAVED AREAS AND A MAXIMUM COVER OF 84", UNLESS APPROVE BY JEA.
6. THE SOILS BETWEEN THE MAIN AND THE CONFLICT PIPE SHALL BE COMPACTED TO 98% OF THE MAXIMUM DENSITY AS DETERMINED BY THE LABORATORY MODIFIED PROCTOR TEST ASTM D 1557.

ADJUSTMENT UNDER EXISTING UTILITIES TIE RODS

JANUARY 2019 — PLATE W-35

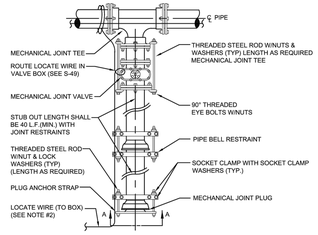

PLAN



SECTION "A-A"

NOTES:

1. IN LIEU OF BELL/ROD RESTRAINTS, MECHANICAL JOINT RESTRAINTS MAY BE USED.
2. LOCATING WIRE REQUIRED, UTILIZING A LOCATE WIRE BOX INSTALLED AT PLUG LOCATION.
3. NUMBER OF TIE RODS REQUIRED IS AS FOLLOWS:

3" - 8"	DIAMETER MAIN - 2 TIE RODS REQUIRED PER JOINT (3/4" ROD)
10" - 12"	DIAMETER MAIN - 4 TIE RODS REQUIRED PER JOINT (3/4" ROD)
14" - 16"	DIAMETER MAIN - 6 TIE RODS REQUIRED PER JOINT (3/4" ROD)
18" - 20"	DIAMETER MAIN - 8 TIE RODS REQUIRED PER JOINT (3/4" ROD)
24"	DIAMETER MAIN -12 TIE RODS REQUIRED PER JOINT (3/4" ROD)
30" - 36"	DIAMETER MAIN -14 TIE RODS REQUIRED PER JOINT (1" ROD)
42" - 48"	DIAMETER MAIN -16 TIE RODS REQUIRED PER JOINT (1 1/4" ROD)
54"	DIAMETER MAIN -18 TIE RODS REQUIRED PER JOINT (1 1/4" ROD)

4. THE LOCATION OF THE DEAD END PLUG SHALL NOT BE UNDER PAVEMENT, IF POSSIBLE. THE STUB OUT SHALL EXTEND BEYOND THE INTERSECTION AREAS OR ROAD CROSSING BY 10 FEET (MIN.) WHERE POSSIBLE.

PLUGGED DEAD END USING MECHANICAL RESTRAINTS

JANUARY 2019 — PLATE W-37

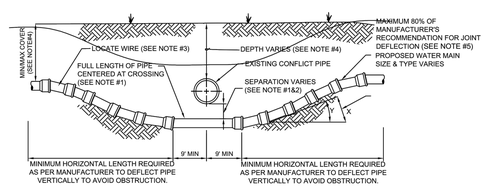

CASE "B" CROSSING

NOTES:

1. IF EXISTING CONFLICT PIPE IS A WATER MAIN, 12-INCHES OF SEPARATION IS REQUIRED. A FULL LENGTH OF PIPE SHALL BE CENTERED OVER EXISTING UTILITY MAIN TO PROVIDE MAXIMUM JOINT SPACING FOR ALL CROSSING.
2. FOR OTHER LOCATION LIMITATIONS SEE DETAIL (W-10 & W-11).
3. LOCATING WIRE REQUIRED: SEE DETAIL W-44.
4. THE COVER OVER ALL PIPING LESS THAN 24" SIZE SHALL BE A MINIMUM OF 30" IN UNPAVED AREAS AND 36" IN PAVED AREAS WITH A MAXIMUM COVER OF 60" UNLESS APPROVED OTHERWISE BY JEA. COVER FOR PIPING 24" SIZE AND LARGER SHALL BE MINIMUM OF 36" (PAVED AND UNPAVED) AND MAXIMUM OF 84" UNLESS APPROVED OTHERWISE BY JEA. THE SOILS BETWEEN THE NEW MAIN AND THE CONFLICT PIPE SHALL BE COMPACTED TO 98% OF THE MAXIMUM DENSITY AS DETERMINED BY THE LABORATORY MODIFIED PROCTOR TEST ASTM D 1557.
5. JEA ONLY ALLOWS 80% OF THE PIPE MANUFACTURER'S RECOMMENDATION FOR JOINT DEFLECTION. BENDING THE PIPE BARREL IS NOT ALLOWED. UNLESS OTHERWISE APPROVED BY JEA, THE MAXIMUM ARE LISTED IN TABLE BELOW. ONLY MANUAL FORCE CAN BE UTILIZED TO OBTAIN THESE JOINT DEFLECTION. ALL OFFSETS ARE BASED ON MINIMUM 20LF PIPE LENGTH.

MAXIMUM ALLOWED OFFSET FOR PIPE BY JOINT DEFLECTION

PVC PIPE

PIPE SIZE (IN.)	(X) MAX. OFFSET (IN.)	(Y) ANGLE AT ONE BELL	RESULTING RADIUS OF CURVE WITH 20FT. LENGTHS
2	30	7°	158 FT
4	10	2.4°	480 FT
6	10	2.4°	480 FT
8	10	2.4°	480 FT
10	10	2.4°	480 FT
12	8.5	2°	564 FT
14 - 24	5	1.2°	960 FT
30 - 48	3.25	0.8°	1477 FT

DUCTILE IRON PIPE (Mechanical Joint)

PIPE SIZE (IN.)	(X) MAX. OFFSET (IN.)	(Y) ANGLE AT ONE BELL	RESULTING RADIUS OF CURVE WITH 20FT. LENGTHS
-	-	-	-
4	27	6.5°	177 FT
6	24	5.7°	200 FT
8 - 12	17.5	4.2°	273 FT
14 - 16	12	2.9°	400 FT
18 - 20	10	2.4°	477 FT
24 - 30	8	1.9°	600 FT
36	7	1.7°	687 FT
42 - 48	6.7	1.6°	716 FT

ADJUSTMENT UNDER EXISTING UTILITIES PIPE JOINT DEFLECTION

JANUARY 2019 — PLATE W-40

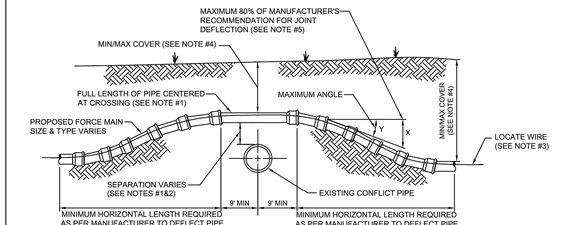

CASE "A" CROSSING

NOTES:

1. IF EXISTING CONFLICT PIPE IS A WATER MAIN, 12-INCHES OF SEPARATION IS REQUIRED. A FULL LENGTH OF PIPE SHALL BE CENTERED OVER EXISTING UTILITY MAIN TO PROVIDE MAXIMUM JOINT SPACING FOR ALL CROSSING.
2. FOR OTHER LOCATION LIMITATIONS SEE DETAIL (W-10 & W-11).
3. LOCATING WIRE REQUIRED: SEE DETAIL W-44.
4. THE COVER OVER ALL PIPING LESS THAN 24" SIZE SHALL BE A MINIMUM OF 30" IN UNPAVED AREAS AND 36" IN PAVED AREAS WITH A MAXIMUM COVER OF 60" UNLESS APPROVED OTHERWISE BY JEA. COVER FOR PIPING 24" SIZE AND LARGER SHALL BE MINIMUM OF 36" (PAVED AND UNPAVED) AND MAXIMUM OF 84" UNLESS APPROVED OTHERWISE BY JEA. THE SOILS BETWEEN THE NEW MAIN AND THE CONFLICT PIPE SHALL BE COMPACTED TO 98% OF THE MAXIMUM DENSITY AS DETERMINED BY THE LABORATORY MODIFIED PROCTOR TEST ASTM D 1557.
5. JEA ONLY ALLOWS 80% OF THE PIPE MANUFACTURER'S RECOMMENDATION FOR JOINT DEFLECTION. BENDING THE PIPE BARREL IS NOT ALLOWED. UNLESS OTHERWISE APPROVED BY JEA, THE MAXIMUM ARE LISTED IN TABLE BELOW. ONLY MANUAL FORCE CAN BE UTILIZED TO OBTAIN THESE JOINT DEFLECTION. ALL OFFSETS ARE BASED ON MINIMUM 20LF PIPE LENGTH.

MAXIMUM ALLOWED OFFSET FOR PIPE BY JOINT DEFLECTION

PVC PIPE

PIPE SIZE (IN.)	(X) MAX. OFFSET (IN.)	(Y) ANGLE AT ONE BELL	RESULTING RADIUS OF CURVE WITH 20FT. LENGTHS
2	30	7°	158 FT
4	10	2.4°	480 FT
6	10	2.4°	480 FT
8 - 12	17.5	4.2°	273 FT
14 - 16	12	2.9°	400 FT
18 - 20	10	2.4°	477 FT
24 - 30	8	1.9°	600 FT
36	7	1.7°	687 FT
42 - 48	6.7	1.6°	716 FT

DUCTILE IRON PIPE (Mechanical Joint)

PIPE SIZE (IN.)	(X) MAX. OFFSET (IN.)	(Y) ANGLE AT ONE BELL	RESULTING RADIUS OF CURVE WITH 20FT. LENGTHS
-	-	-	-
4	27	6.5°	177 FT
6	24	5.7°	200 FT
8 - 12	17.5	4.2°	273 FT
14 - 16	12	2.9°	400 FT
18 - 20	10	2.4°	477 FT
24 - 30	8	1.9°	600 FT
36	7	1.7°	687 FT
42 - 48	6.7	1.6°	716 FT

ADJUSTMENT OVER EXISTING UTILITIES PIPE JOINT DEFLECTION

JANUARY 2019 — PLATE W-41

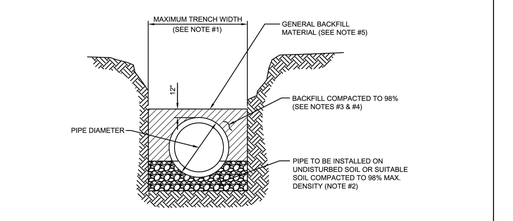

TYPICAL TRENCH

NOTES:

1. TRENCH SIDES SHALL BE APPROXIMATELY VERTICAL BETWEEN AN ELEVATION OF 1 FOOT ABOVE THE TOP OF THE PIPE AND THE CENTER LINE OF THE PIPE, OTHERWISE, TRENCH SIDES SHALL BE AS VERTICAL AS POSSIBLE OR AS REQUIRED BY OSHA STANDARDS. REFER TO THE MEASUREMENT AND PAYMENT SECTION (SECTION #601, PARAGRAPH #4) TO DETERMINE MAXIMUM PAYLINE WIDTHS.
2. BELL HOLE SHALL BE DUG TO PERMIT THE ENTIRE STRAIGHT BARREL OF THE PIPE TO REST ON THE UNDISTURBED TRENCH BOTTOM. BOULDERS OR LOOSE ROCKS LARGER THAN 3/4 INCH IN SIZE WILL NOT BE PERMITTED IN BACKFILL UP TO 1 FOOT ABOVE THE TOP OF THE PIPE.
3. BACK FILL MATERIAL UP TO A LEVEL OF 1 FOOT OVER THE PIPE SHALL CONSIST OF AASHTO CLASS A-3 SOIL (SUITABLE SOIL) AND SHALL EXCLUDE CLAY MATERIALS AND LOOSE ROCKS LARGER THAN 3/4 INCH SIZE.
4. BACKFILL MATERIAL UP TO A LEVEL 1 FOOT OVER THE TOP OF PIPE OR BOTTOM OF STRUCTURES SHALL BE PLACED IN 6 INCH COMPACTED THICKNESS LAYERS AND SHALL BE COMPACTED TO 98% OF IT'S MAXIMUM DENSITY AS DETERMINED BY THE LABORATORY MODIFIED PROCTOR TEST, ASTM D1557.
5. SEE " EXCAVATION AND EARTHWORK", SECTION 408 FOR ADDITIONAL REQUIREMENTS INCLUDING REMOVAL AND REPLACEMENT OF UNSUITABLE SOILS, DEWATERING, COMPACTION REQUIREMENTS AND DENSITY TESTING OF COMPACTED SOILS.

OPEN CUT TRENCH FOR PRESSURE PIPE

JANUARY 2019 — IN CITY RIGHT -OF-WAY — PLATE W-42

A LOCATE WIRE SHALL BE PLACED ON SERVICES 10FT OR GREATER.

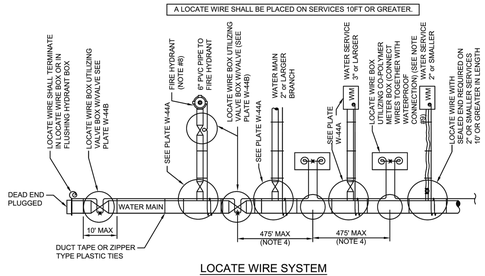

LOCATE WIRE SYSTEM

NOTES:

1. LOCATING WIRE TO BE INSTALLED IN EITHER THE ONE OR ELEVEN O'CLOCK POSITION ON ALL DUCTILE IRON OR PVC (PRESSURE MAINS). LOCATE WIRE SHALL ALSO BE INSTALLED ON ALL (HDPE) POLY MAIN PIPING (1:00 OR 11:00 POSITION, IF POSSILBLE).
2. SECURE LOCATING WIRE TO PVC & D.I.P. WATER MAIN BY USE OF DUCT TAPE OR ZIPPER TYPE PLASTIC TIE STRAPS SPACED AT A MAXIMUM DISTANCE OF TEN (10') AND AT EACH SIDE OF BELL JOINT OR FITTING.
3. THE ENTIRE LOCATING SYSTEM SHALL BE SUBJECTED TO TESTING TO DETERMINE ITS RELIABILITY. WHERE INSTALLED UNDER PAVEMENT AREAS, TESTING SHALL BE DONE PRIOR TO THE PLACEMENT OF PAVEMENT, UNLESS APPROVED OTHERWISE BY JEA.
4. LOCATING WIRE SHALL TERMINATE WITHIN AN ACTIVE VALVE BOX (WITH A VALVE) OR A METER BOX (IF NO VALVE) AT 475' INTERVALS. SEE DETAIL PLATE W-44B. WIRE CONNECTIONS BELOW GROUND (OUTSIDE OF A BOX) SHALL BE AVOIDED.
5. REFER TO SECTION 350 FOR LOCATE WIRE SPECIFICATIONS.
6. " " INDICATES THAT THE WIRES ARE CONNECTED TOGETHER WITH A WATERPROOF CONNECTION. (SEE DETAIL W-44B)
7. " " INDICATES A WIRE PIG-TAIL (4' LONG)
8. FOR FIRE HYDRANT LOCATE WIRE REQUIREMENTS AND EXCLUSIONS, SEE PLATES W-12,13 AND 14.
9. AN "LW" CUT SHALL BE CARVED IN THE CONCRETE CURB AND PAINTED AT ALL LOCATE WIRE BOXES.
10. FOUR LANES OF TRAFFIC (HAVING TWO LANES OF TRAFFIC IN EACH DIRECTION) OR GREATER THE LOCATE WIRE AND VALVE BOX SHALL BE OFF-SET TO THE RIGHT-OF-WAY.

LOCATE WIRE CONSTRUCTION FOR WATER MAINS

JANUARY 2019 — PLATE W-44

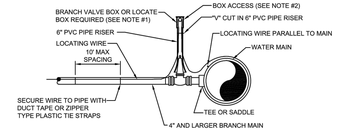

BRANCH FORCE MAIN

(2" AND LARGER WATER MAIN OR 3" AND LARGER WATER SERVICE PIPE)

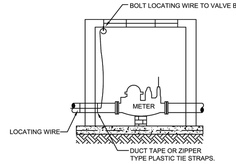

CONNECTION AT LARGE METER BOX

(3" OR LARGER SERVICE)

NOTES:

1. NOTE THAT THE BRANCH WIRE IS NOT CONNECTED TO THE MAIN WIRE.
2. LOCATE WIRE SHALL ENTER THE VALVE BOX THROUGH A "V" CUT IN THE 6" PVC RISER PIPE SECTION (SEE W-18).
3. LOCATE WIRE SHALL HAVE ENOUGH SLACK TO REACH 4' ABOVE FINAL GRADE AND LOCATE POINTS.

LOCATE WIRE FOR BRANCH MAIN

JANUARY 2019 — PLATE W-44A

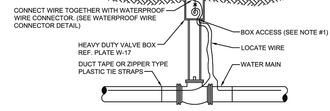

LOCATE WIRE BOX UTILIZING VALVE BOX

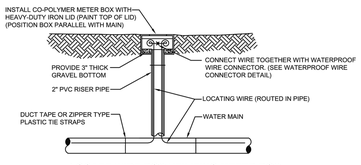

LOCATE WIRE BOX UTILIZING METER BOX

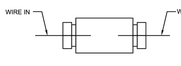

WATERPROOF WIRE CONNECTOR DETAIL

NOTES:

1. LOCATE WIRE SHALL ENTER THE VALVE BOX THROUGH A "V" CUT IN THE 6" PVC RISER PIPE (SEE W-18).
2. LOCATE WIRE SHALL HAVE ENOUGH SLACK TO REACH 4' ABOVE FINAL GRADE AND LOCATE POINTS.
3. LOCATE WIRE CONNECTION SHALL ONLY BE A 2 WAY CONNECTION.

LOCATE WIRE BOX

JANUARY 2019 — PLATE W-44B

JonesEdmunds
CERTIFICATE OF AUTHORIZATION #1841
730 NE WALDO ROAD, SUITE 210, GAINESVILLE, FL 32641 / (352) 377-5821
8657 BAYPINE ROAD SUITE 300, JACKSONVILLE, FL 32256 / (904) 744-5401

NO.	BY	DATE	REVISIONS
6.			
5.			
4.			
3.			
2.			
1.			

DESIGN ENGINEER: KENNETH A. FRASER, PE
FLORIDA REGISTRATION NO. 57452

DESIGNER: KFRASER
DRAWN BY: RWADE
DATE: MARCH 30, 2020
CHECKED BY: HBRIDGES
DATE: MARCH 30, 2020

JEA Building Community sm

BOULEVARD FORCE MAIN AND WATER MAIN REPLACEMENT JEA STANDARD DETAILS

PROJ. NO. 09302-055-01
DATE: MARCH 30, 2020
SCALE: NONE

NO. SHEETS 35
SHEET NO. 19
DRAWING NO. D7

Fri Mar 27, 2020 — 15:58
Y:\09302-jea\Projects\055-01 boulevard frm & wm replacement\CAD\Dwgs\Details\093020501-D07.dwg Current Layout Tab = D7
Xrefs Attached= XHUD-U-IB [..\Xref\general\XHUD-U-IB.dwg]

HORIZONTAL & VERTICAL SEPARATION REQUIREMENTS

	PROPOSED UTILITY											
	POTABLE WATER			WASTEWATER GRAVITY AND FORCE MAIN			RECLAIMED WATER			VACUUM SEWERS		
CONFLICTING UTILITY	HORIZ.	VERT.	JOINT SPACING*	HORIZ.	VERT.	JOINT SPACING*	HORIZ.	VERT.	JOINT SPACING*	HORIZ.	VERT.	JOINT SPACING*
POTABLE WATER	3' NOTE 1	12"	3' NOTE 2	6' to 10'	12" NOTE 5	6' NOTE 2	3'	12"	6' NOTE 2	3' to 10'	12"	3' NOTE 2
RECLAIMED WATER	3'	12"	6' NOTE 2	3' NOTE 1	12"	3' NOTE 2	3'	12"	6' NOTE 2	3' NOTE 1	12"	3' NOTE 2
WASTEWATER (GRAVITY AND FORCE MAIN)	6' to 10'	12"	6' NOTE 2	3' NOTE 1	12"	6"	3' NOTE 1	12"	3' NOTE 2	3' NOTE 1	12"	3' NOTE 2
VACUUM SEWERS	3' to 10'	12"	3' NOTE 2	3' NOTE 1	12"	6"	3' NOTE 1	12"	3' NOTE 2	3' NOTE 1	12"	3' NOTE 2
RIGHT OF WAYS	3' NOTE 1	N/A	N/A	3' NOTE 1	N/A	N/A	3' NOTE 1	N/A	N/A	3' NOTE 1	N/A	N/A
PERMANENT STRUCTURES (BUILDINGS, SIGNS, POLES, ETC.)	SEE NOTE 7	N/A	N/A	SEE NOTE 7	N/A	N/A	SEE NOTE 7	N/A	N/A	SEE NOTE 7	N/A	N/A
STORM SEWERS	3' NOTE 1	12"	3' NOTE 2	3' NOTE 1	12"	3' NOTE 2	3' NOTE 1	12"	3' NOTE 2	3' NOTE 1	12"	3' NOTE 2
GAS	3' NOTE 1	12"	3' NOTE 2	3' NOTE 1	12"	3' NOTE 2	3' NOTE 1	12"	3' NOTE 2	3' NOTE 1	12"	3' NOTE 2
TREES	3'-6' NOTE 6	N/A	N/A	3'-6' NOTE 6	N/A	N/A	3'-6' NOTE 6	N/A	N/A	3'-6' NOTE 6	N/A	N/A
ALL OTHER UTILITIES	3' NOTE 1	12"	3' NOTE 2	3' NOTE 1	12"	3' NOTE 2	3' NOTE 1	12"	3' NOTE 2	3' NOTE 1	12"	3' NOTE 2

NOTES:

1. THIS SEPARATION REQUIREMENT IS TO PROVIDE ACCESSIBILITY FOR CONSTRUCTION AND MAINTENANCE. THREE FEET OF HORIZONTAL SEPARATION IS THE MINIMUM FOR PIPES WITH THREE FEET OF COVER. FOR PIPES INSTALLED AT GREATER DEPTH, PROVIDE AN ADDITIONAL FOOT OF SEPARATION FOR EACH ADDITIONAL FOOT OF DEPTH.
2. THE MINIMUM JOINT SPACING REQUIRED FROM CROSSING FROM OTHER UTILITIES WHILE STILL MAINTAINING MINIMUM VERTICAL SEPARATION.
3. DISTANCES GIVEN ARE FROM OUTSIDE OF PIPE TO OUTSIDE OF PIPE.
4. NO WATER PIPE SHALL PASS THROUGH OR COME INTO CONTACT WITH ANY PART OF SANITARY OR STORM WATER MANHOLE OR STRUCTURES.
5. WATER MAIN SHOULD CROSS ABOVE OTHER PIPES WHENEVER POSSIBLE. WHEN WATER MAIN MUST BE BELOW OTHER UTILITY PIPING, THE MINIMUM SEPARATION SHALL BE 12 INCHES.
6. REFER TO SECTION 429, III.4.3.
7. REFER TO SECTION 429, III.4.2 FOR MINIMUM SEPARATION REQUIREMENTS FROM PIPE TO STRUCTURES.

SEPARATION REQUIREMENTS FOR WATER, WASTEWATER AND RECLAIMED WATER MAINS

JANUARY 2019 PLATE S-26

WATER MAIN AND NON-WATER MAIN SEPARATION REQUIREMENTS - NOTES

1. IT IS REQUIRED THAT "WATER MAINS" BE INSTALLED, CLEANED, DISINFECTED AND HAVE A SATISFACTORY BACTERIOLOGICAL SURVEY PERFORMED IN ACCORDANCE WITH THE LATEST APPLICABLE AWWA STANDARDS, CHAPTER 62-555, F.A.C. AND LATEST JEA WATER AND SEWER STANDARDS. FOR THE PURPOSE OF THIS SECTION, THE PHRASE "WATER MAINS" SHALL MEAN MAINS, INCLUDING TREATMENT PLANT PROCESS PIPING, CONVEYING EITHER RAW, PARTIALLY TREATED, OR FINISHED DRINKING WATER; FIRE HYDRANT LEADS; AND SERVICE LINES THAT HAVE AN INSIDE DIAMETER OF THREE (3) INCHES OR GREATER. IN ADDITION, THE PHRASE "RECLAIMED WATER" REFERS TO THE WATER REGULATED UNDER PART III OF CHAPTER 62-610, F.A.C.
2. NEW OR RELOCATED, UNDERGROUND WATER MAINS SHALL BE LAID TO PROVIDE A HORIZONTAL DISTANCE OF AT LEAST THREE (3) FEET BETWEEN THE OUTSIDE OF THE WATER MAIN AND THE OUTSIDE OF ANY EXISTING OR PROPOSED STORM SEWER, STORMWATER FORCE MAIN, OR PIPELINE CONVEYING RECLAIMED WATER.
3. NEW OR RELOCATED, UNDERGROUND WATER MAINS SHALL BE LAID TO PROVIDE A HORIZONTAL DISTANCE OF AT LEAST SIX (6) FEET, AND PREFERABLY TEN (10) FEET, BETWEEN THE OUTSIDE OF THE WATER MAIN AND THE OUTSIDE OF ANY EXISTING OR PROPOSED GRAVITY OR PRESSURE-TYPE SANITARY SEWER, WASTEWATER FORCE MAIN, OR PIPELINE CONVEYING RECLAIMED WATER. THE MINIMUM HORIZONTAL SEPARATION DISTANCE BETWEEN WATER MAINS AND GRAVITY-TYPE SANITARY SEWERS MAY BE REDUCED TO THREE (3) FEET WHERE THE BOTTOM OF THE WATER MAIN IS LAID AT LEAST SIX (6) INCHES ABOVE THE TOP OF THE SEWER (SPECIAL CASE).
4. NEW OR RELOCATED, UNDERGROUND WATER MAINS CROSSING ANY EXISTING OR PROPOSED GRAVITY OR VACUUM-TYPE SANITARY SEWER OR STORM SEWER SHALL BE LAID SO THE OUTSIDE OF THE WATER MAIN IS AT LEAST SIX (6) INCHES, AND PREFERABLE TWELVE (12) INCHES, ABOVE OR AT LEAST TWELVE (12) INCHES BELOW THE OUTSIDE OF THE OTHER PIPELINE. HOWEVER, IT IS PREFERABLE TO LAY THE WATER MAIN ABOVE THE OTHER PIPELINE.
5. NEW OR RELOCATED, UNDERGROUND WATER MAINS CROSSING ANY EXISTING OR PROPOSED PRESSURE-TYPE SANITARY SEWER, WASTEWATER OR STORMWATER FORCE MAIN, OR PIPELINE CONVEYING RECLAIMED WATER SHALL BE LAID SO THE OUTSIDE OF THE WATER MAIN IS A LEAST TWELVE (12) INCHES ABOVE OR BELOW THE OUTSIDE OF THE OTHER PIPELINE. HOWEVER, IT IS PREFERABLE TO LAY THE WATER MAIN ABOVE THE OTHER PIPELINE.
6. AT THE UTILITY CROSSINGS DESCRIBED IN NOTES 4 AND 5 ABOVE, ONE FULL LENGTH OF WATER MAIN PIPE SHALL BE CENTERED ABOVE OR BELOW THE OTHER PIPELINE SO THE WATER MAIN JOINTS WILL BE AS FAR AS POSSIBLE FROM THE OTHER PIPELINE. ALTERNATIVELY, AT SUCH CROSSINGS, THE PIPES SHALL BE ARRANGED SO THAT ALL WATER MAIN JOINTS ARE AT LEAST THREE (3) FEET FROM ALL JOINTS IN VACUUM-TYPE SANITARY SEWERS, STORM SEWERS, STORMWATER FORCE MAINS, OR PIPELINES CONVEYING RECLAIMED WATER, AND AT LEAST SIX (6) FEET FROM ALL JOINTS IN GRAVITY OR PRESSURE-TYPE SANITARY SEWERS, WASTEWATER FORCE MAINS, OR PIPELINE CONVEYING RECLAIMED WATER.
7. NEW OR RELOCATED FIRE HYDRANTS SHALL BE LOCATED SO THAT THE HYDRANTS ARE AT LEAST THREE (3) FEET FROM ANY EXISTING OR PROPOSED STORM SEWER, STORMWATER FORCE MAIN, OR PIPELINE CONVEYING RECLAIMED WATER; AT LEAST THREE (3) FEET, AND PREFERABLY TEN (10) FEET, FROM ANY EXISTING OR PROPOSED VACUUM-TYPE SANITARY SEWER; AT LEAST SIX (6) FEET, AND PREFERABLY TEN (10) FEET, FROM ANY EXISTING OR PROPOSED GRAVITY OR PRESSURE-TYPE SANITARY SEWER OR WASTEWATER FORCE MAIN.
8. WHERE AN UNDERGROUND WATER MAIN IS BEING LAID LESS THAN THE REQUIRED MINIMUM HORIZONTAL DISTANCE FROM ANOTHER PIPELINE AND WHERE AN UNDERGROUND WATER MAIN IS CROSSING ANOTHER PIPELINE AND JOINTS IN THE WATER MAIN ARE BEING LOCATED LESS THAN THE REQUIRED MINIMUM DISTANCE FROM JOINTS IN THE OTHER PIPELINE, THE CONTRACTOR SHALL CONSULT THE DESIGN ENGINEER TO OBTAIN APPROVAL OF ANY ALTERNATIVE CONSTRUCTION METHODS, PRIOR TO CONSTRUCTION.

NOTES ON UTILITY SEPARATION REQUIREMENTS - SEWER

JANUARY 2019 PLATE S-27

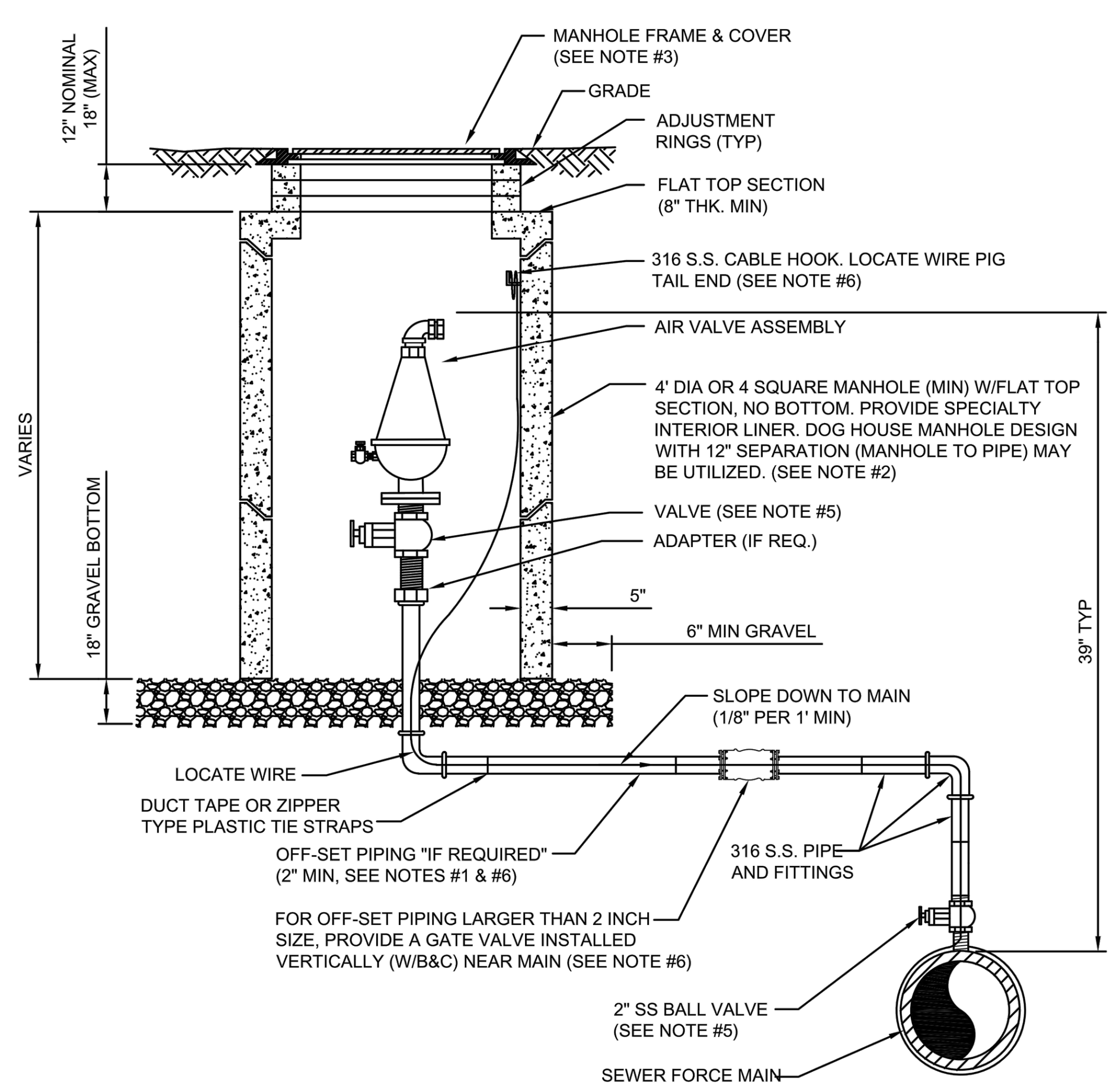

NOTES:

1. THE AIR ASSEMBLY MANHOLE SHALL BE LOCATED OUTSIDE OF THE ROADWAY PAVEMENT AREA (I.E. LOCATED IN NON-TRAFFIC AREAS). IF OFF-SET PIPING IS REQUIRED, THE PIPING SHALL BE 2 INCH MINIMUM, (SAME SIZE AS AIR VALVE INLET). FOR PIPE SIZES 3 INCH AND SMALLER: PIPING SHALL BE 316 STAINLESS STEEL SCH.40, STD GRADE, THREADED. FOR PIPE SIZES 4 INCH AND LARGER: PIPING SHALL BE 316 STAINLESS STEEL SCH. 10 (MIN), WELDED OR PVC DR-18 PIPE AND FITTINGS-RESTRAINED.
2. THE CONCRETE MANHOLE SHALL INCLUDE A POLYURETHANE SPECIALTY LINER (PER SPEC SECTION 446) TO BE INSTALLED ON THE INTERIOR SURFACES INCLUDING THE RISER SECTION TOP AND THE ADJUSTMENT RINGS. A BITUMINOUS WATERPROOFING MATERIAL SHALL BE PROVIDED ON THE OUTSIDE SURFACES OF THE MANHOLE.
3. FRAME AND COVER SHALL BE JEA STANDARD. THE COVER SHALL HAVE NO GASKET TO ALLOW AIR TO EXIT VAULT (REMOVE GASKET IF NECESSARY FROM THE UNDER SIDE OF STANDARD JEA COVER). THE COVER (WHEN FLIPPED OPEN) MUST CLEAR THE AIR VALVE ASSEMBLY AT ALL TIMES OR A SQUARE TOP WITH ALUMINUM DOOR SHALL BE PROVIDED (NON-TRAFFIC LOCATIONS ONLY).
4. FOR PIPE SIZES 3 INCH AND SMALLER, PROVIDE A STAINLESS STEEL BALL VALVE (2" MIN). FOR PIPE SIZES 4 INCH AND LARGER, PROVIDE A FLANGE GATE VALVE (WHEEL OPERATOR) OR PLUG VALVE. (LEVER ARM OPERATOR) SEE SPECIFICATION FOR ADDITIONAL REQUIREMENTS.
5. FOR A 2" AIR VALVE, PROVIDE 2" STAINLESS STEEL BALL VALVE AT THE MAIN. FOR AIR VALVES LARGER THAN 2" SIZE, PROVIDE A TAPPING SLEEVE OR DUCTILE IRON TEE FITTING. ALSO, FOR OFF-SET PIPING LARGER THAN 2 INCH SIZE, PROVIDE A GATE VALVE (INSTALLED VERTICALLY NEAR MAIN). SEE SPECIFICATIONS FOR ADDITIONAL REQUIREMENTS.
6. LOCATE WIRE SHALL HAVE ENOUGH SLACK TO REACH 4' ABOVE FINAL GRADE.

AIR VALVE ASSEMBLY INSIDE MANHOLE

JANUARY 2019 PLATE S-29

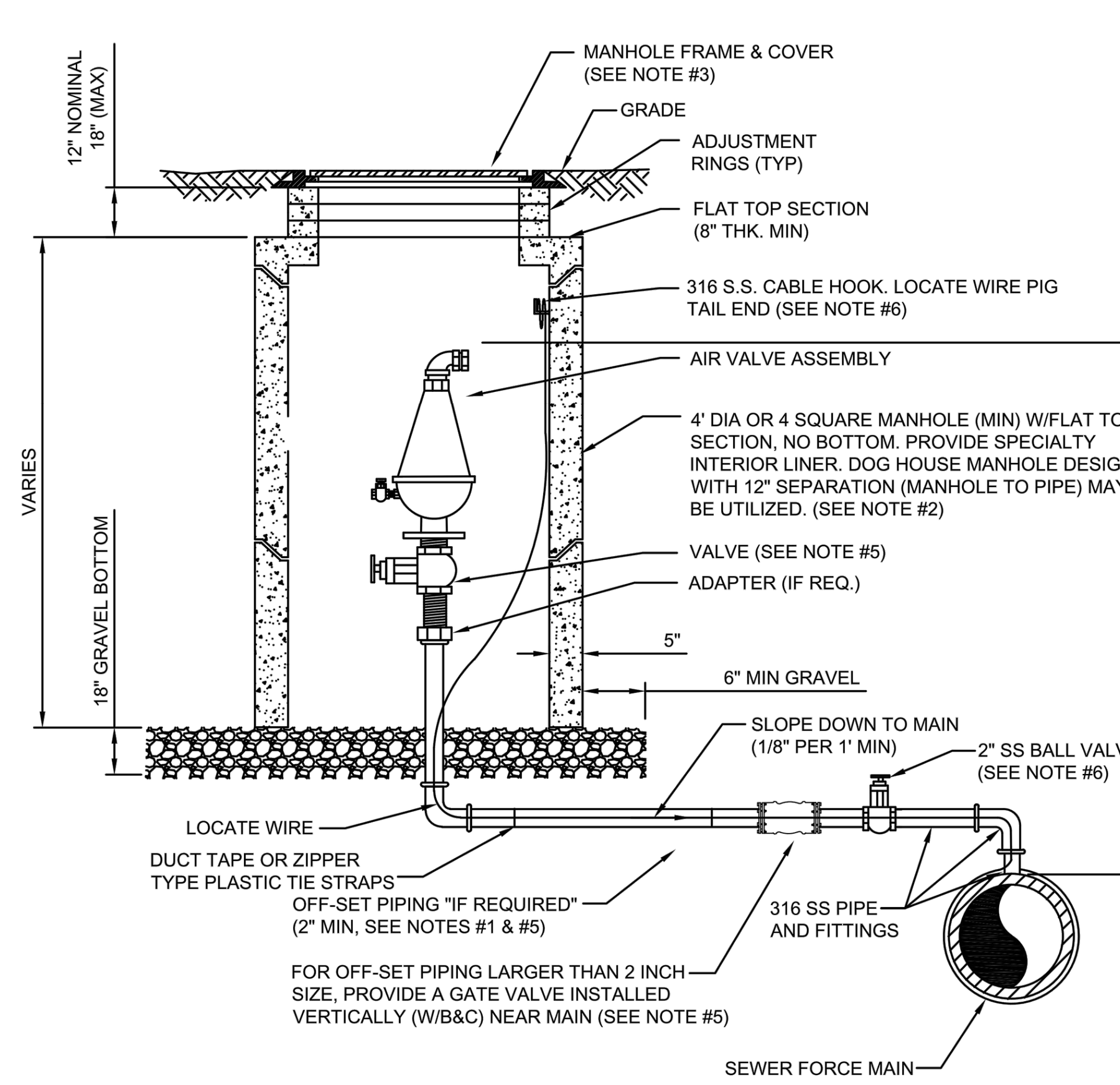

NOTES:

1. THE AIR ASSEMBLY MANHOLE SHALL BE LOCATED OUTSIDE OF THE ROADWAY PAVEMENT AREA (I.E. LOCATED IN NON-TRAFFIC AREAS). IF OFF-SET PIPING IS REQUIRED, THE PIPING SHALL BE 2 INCH MINIMUM, (SAME SIZE AS AIR VALVE INLET). FOR PIPE SIZES 3 INCH AND SMALLER: PIPING SHALL BE 316 STAINLESS STEEL SCH.40, STD GRADE, THREADED. FOR PIPE SIZES 4 INCH AND LARGER: PIPING SHALL BE 316 STAINLESS STEEL SCH. 10 (MIN), WELDED OR PVC DR-18 PIPE AND FITTINGS-RESTRAINED.
2. THE CONCRETE MANHOLE SHALL INCLUDE A POLYURETHANE SPECIALTY LINER (PER SPEC SECTION 446) TO BE INSTALLED ON THE INTERIOR SURFACES INCLUDING THE RISER SECTION TOP AND THE ADJUSTMENT RINGS. A BITUMINOUS WATERPROOFING MATERIAL SHALL BE PROVIDED ON THE OUTSIDE SURFACES OF THE MANHOLE.
3. FRAME AND COVER SHALL BE JEA STANDARD. THE COVER SHALL HAVE NO GASKET TO ALLOW AIR TO EXIT VAULT (REMOVE GASKET IF NECESSARY FROM THE UNDER SIDE OF STANDARD JEA COVER). THE COVER (WHEN FLIPPED OPEN) MUST CLEAR THE AIR VALVE ASSEMBLY AT ALL TIMES OR A SQUARE TOP WITH ALUMINUM DOOR SHALL BE PROVIDED (NON-TRAFFIC LOCATIONS ONLY).
4. FOR PIPE SIZES 3 INCH AND SMALLER, PROVIDE A STAINLESS STEEL BALL VALVE (2" MIN). FOR PIPE SIZES 4 INCH AND LARGER, PROVIDE A FLANGE GATE VALVE (WHEEL OPERATOR) OR PLUG VALVE. (LEVER ARM OPERATOR) SEE SPECIFICATION FOR ADDITIONAL REQUIREMENTS.
5. FOR A 2" AIR VALVE, PROVIDE 2" STAINLESS STEEL BALL VALVE AT THE MAIN. FOR AIR VALVES LARGER THAN 2" SIZE, PROVIDE A TAPPING SLEEVE OR DUCTILE IRON TEE FITTING. ALSO, FOR OFF-SET PIPING LARGER THAN 2 INCH SIZE, PROVIDE A GATE VALVE (INSTALLED VERTICALLY NEAR MAIN). SEE SPECIFICATIONS FOR ADDITIONAL REQUIREMENTS.
6. LOCATE WIRE SHALL HAVE ENOUGH SLACK TO REACH 4' ABOVE FINAL GRADE.

OPTIONAL LOW PROFILE AIR VALVE ASSEMBLY INSIDE MANHOLE

JANUARY 2019 PLATE S-29A

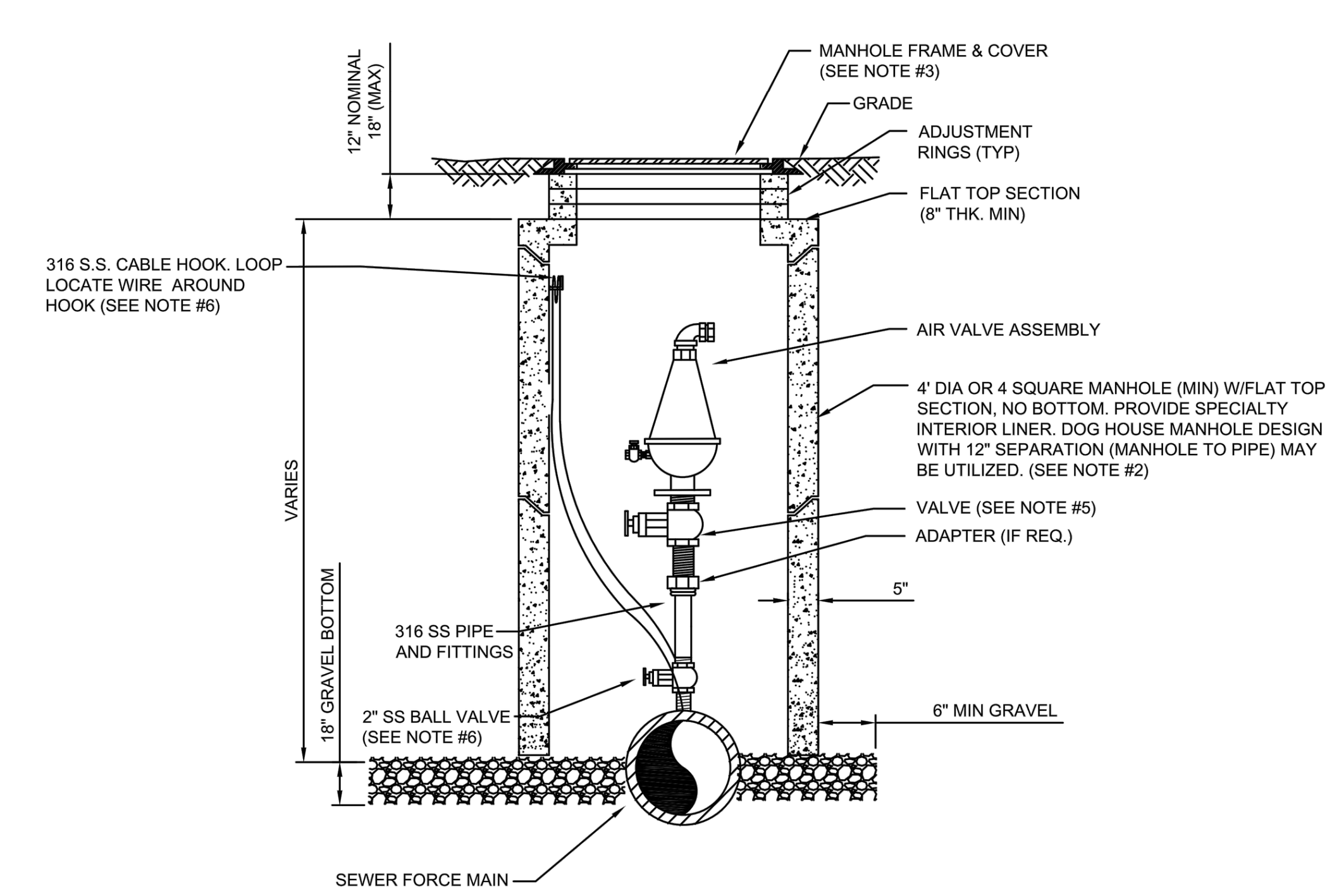

NOTES:

1. THE AIR ASSEMBLY MANHOLE SHALL BE LOCATED OUTSIDE OF THE ROADWAY PAVEMENT AREA (I.E. LOCATED IN NON-TRAFFIC AREAS).
2. THE CONCRETE MANHOLE SHALL INCLUDE A POLYURETHANE SPECIALTY LINER (PER SPEC SECTION 446) TO BE INSTALLED ON THE INTERIOR SURFACES INCLUDING THE RISER SECTION TOP AND THE ADJUSTMENT RINGS. A BITUMINOUS WATERPROOFING MATERIAL SHALL BE PROVIDED ON THE OUTSIDE SURFACES OF THE MANHOLE.
3. FRAME AND COVER SHALL BE JEA STANDARD. THE COVER SHALL HAVE NO GASKET TO ALLOW AIR TO EXIT VAULT (REMOVE GASKET IF NECESSARY FROM THE UNDER SIDE OF STANDARD JEA COVER). THE COVER (WHEN FLIPPED OPEN) MUST CLEAR THE AIR VALVE ASSEMBLY AT ALL TIMES OR A SQUARE TOP WITH ALUMINUM DOOR SHALL BE PROVIDED (NON-TRAFFIC LOCATIONS ONLY).
4. FOR PIPE SIZES 3 INCH AND SMALLER, PROVIDE A STAINLESS STEEL BALL VALVE (2" MIN). FOR PIPE SIZES 4 INCH AND LARGER, PROVIDE A FLANGE GATE VALVE (WHEEL OPERATOR) OR PLUG VALVE. (LEVER ARM OPERATOR) SEE SPECIFICATION FOR ADDITIONAL REQUIREMENTS.
5. FOR A 2" AIR VALVE, PROVIDE 2" STAINLESS STEEL BALL VALVE AT THE MAIN. FOR AIR VALVES LARGER THAN 2" SIZE, PROVIDE A TAPPING SLEEVE OR DUCTILE IRON TEE FITTING. ALSO, FOR OFF-SET PIPING LARGER THAN 2 INCH SIZE, PROVIDE A GATE VALVE (INSTALLED VERTICALLY NEAR MAIN). SEE SPECIFICATIONS FOR ADDITIONAL REQUIREMENTS.
6. LOCATE WIRE SHALL HAVE ENOUGH SLACK TO REACH 4' ABOVE FINAL GRADE.

AIR VALVE ASSEMBLY INSIDE MANHOLE IN ROW

JANUARY 2019 PLATE S-29B

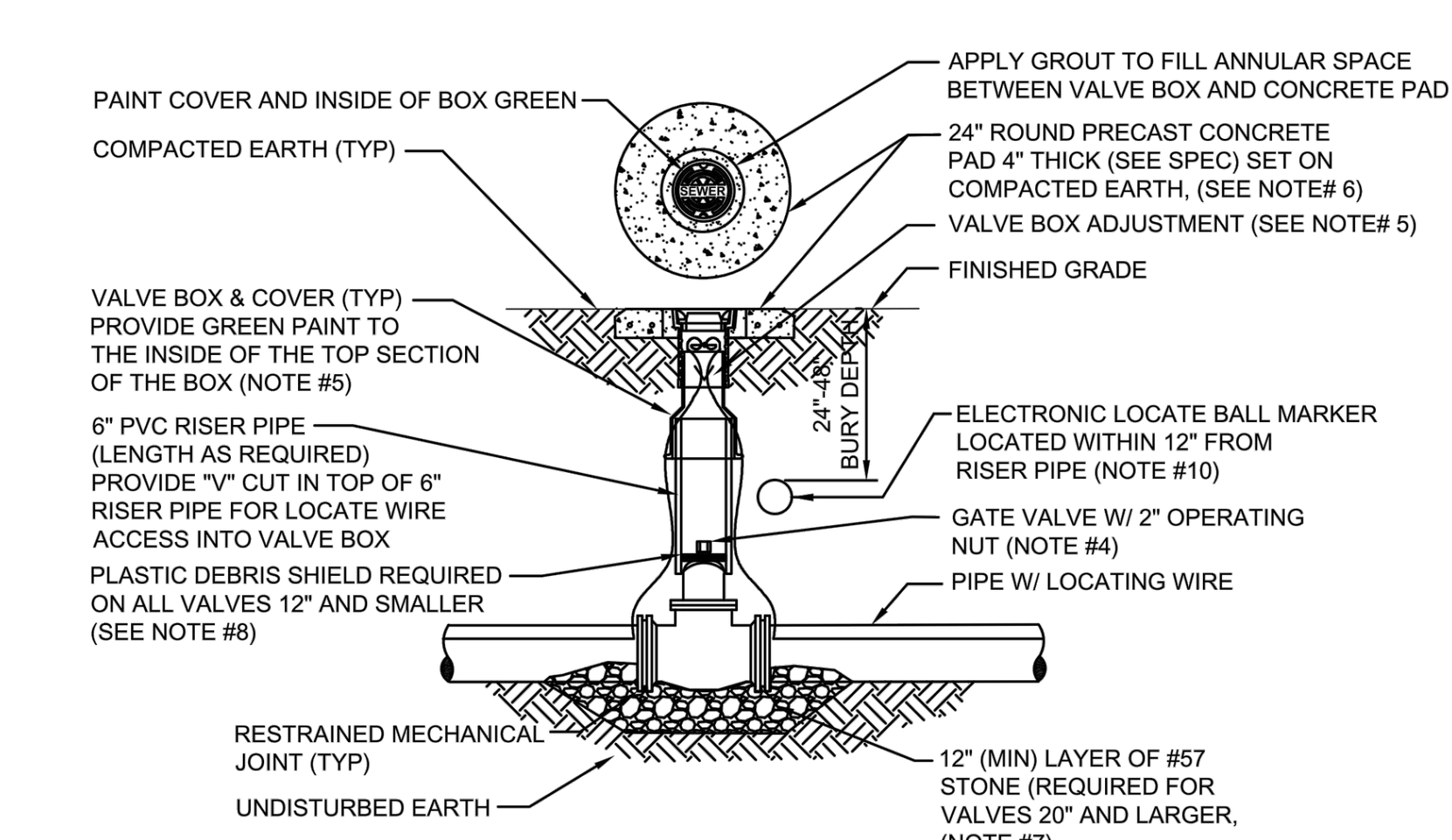

NOTES:

1. FOR UNPAVED LOCATIONS, A PRECAST CONCRETE VALVE PAD SHALL BE PROVIDED AND INSTALLED FLUSH WITH GRADE. CONCRETE PAD IS NOT REQUIRED FOR VALVE LOCATED IN THE ROADWAY, UNLESS SHOWN OR NOTED OTHERWISE.
2. LOCATING WIRE IS REQUIRED ON ALL PRESSURE PIPING (SEE DETAIL S-49).
3. A "V" CUT SHALL BE CARVED IN THE CURB CLOSEST/(ASPHALT IF NO CURB) ADJACENT TO ALL BELOW GRADE VALVES. THE "V" CUT IS TO BE PAINTED GREEN.
4. IN PAVED AREAS, INSTALL VALVE AT A DEPTH TO ALLOW A 12" MIN. DISTANCE BETWEEN THE VALVE COVER PLATE AND THE TOP OF THE VALVE OPERATING NUT. OUTSIDE OF PAVED AREAS (GRASS), INSTALL VALVE AT A DEPTH TO ALLOW A 6" MINIMUM DISTANCE BETWEEN THE VALVE COVER AND THE TOP OF THE VALVE OPERATING NUT. OPERATING NUT/STEM EXTENSION SHALL BE PROVIDED (WHERE APPLICABLE) SO THAT THE OPERATING NUT WILL BE NO MORE THAN 30 INCHES BELOW FINISHED GRADE.
5. FOR NEW CONSTRUCTION, THE VALVE BOX SHALL BE ADJUSTED TO MIDRANGE TO ALLOW FOR FUTURE BOX ADJUSTMENTS. ROUTE LOCATE WIRES THRU A "V" CUT IN THE TOP OF THE 6" PVC RISER PIPE FOR LOCATE WIRE ACCESS INTO VALVE BOX. THE LOCATE WIRES WITH A 24" LONG PIG-TAIL AT THE TOP SHALL BE CONNECTED TOGETHER WITH A WIRE NUT.
6. BRASS IDENTIFICATION TAG INDICATING "SEWER", VALVE SIZE, DIRECTION AND TURNS TO OPEN & VALVE TYPE. PROVIDE A ¼" HOLE IN BRASS TAG AND ATTACH TAG (TWIST WIRE AROUND TAG) TO THE END OF THE LOCATE WIRE. TAGS ARE NOT REQUIRED ON VALVES INSTALLED ON FIRE HYDRANT BRANCH LINES.
7. IN LIEU OF PRECAST CONCRETE PAD, A 6" THICK X 24" (ROUND OR SQUARE) POURED CONCRETE PAD W/2 - #4 REBAR AROUND PERIMETER, MAY BE USED.
8. GRAVEL SHALL BE PROVIDED UNDER ALL VALVES 20" AND LARGER. THE MINIMUM VERTICAL LIMIT OF GRAVEL IS 12" UNDER THE VALVE UP TO ⅓ THE OVERALL HEIGHT OF THE VALVE.
9. FOR VALVES 12 INCH AND SMALLER, PROVIDE A WHITE OR BLACK PLASTIC DEBRIS SHIELD WHICH INSTALLS BELOW THE OPERATING NUT. THIS SHIELD SHALL CENTER THE RISER PIPE BOX OVER THE OPERATING NUT AND MINIMIZE INFILTRATION. SHIELD SHALL BE BY AFC, BOXLOK OR APPROVED EQUAL.
10. ALL VALVES SHALL BE INSTALLED WITH AN ELECTRIC LOCATE MARKER. MARKER SHALL BE 4" DIA. COLOR CODED BALL MARKER (3M-1404XR FOR SEWER).

SEWER VALVE DETAIL

JANUARY 2019 PLATE S-30

JonesEdmunds
CERTIFICATE OF AUTHORIZATION #1841
730 NE WALDO ROAD, GAINESVILLE, FLORIDA 32641 / (352) 377-5821
8657 BAYPINE ROAD SUITE 300, JACKSONVILLE, FL 32256 / (904) 744-5401

NO.	BY	DATE	REVISIONS
6.			
5.			
4.			
3.			
2.			
1.			

DESIGNER: KFRASER
DRAWN BY: RWADE
DATE: MARCH 30, 2020
CHECKED BY: HBRIDGES
DATE: MARCH 30, 2020

DESIGN ENGINEER
KENNETH A. FRASER, PE
FLORIDA REGISTRATION NO.
57452

JEA Building Community

BOULEVARD FORCE MAIN AND WATER MAIN REPLACEMENT JEA STANDARD DETAILS

PROJ. NO. 09302-055-01
DATE: MARCH 30, 2020
SCALE: NONE
NO. SHEETS 35
SHEET NO. 20
DRAWING NO. D8

Y:\09302-jea\Projects\055-01 boulevard fm & wm replacement\CAD\Dwgs\Details\0930205501-D08.dwg Current Layout Tab = D10 Fri Mar 27, 2020 - 15:58
Xrefs Attached= XR055-G-TB [..\Xref\general\XR055-G-TB.dwg]

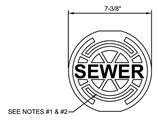

HEAVY DUTY RATING

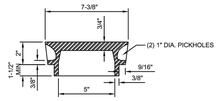

NOTES:

1. PAINT TOP OF THE COVER WITH ENAMEL PAINT (GREEN COLOR).
2. LID WEIGHT: APPROX. 12 LBS.

SEWER SYSTEM VALVE BOX COVER

JANUARY 2019 PLATE S-31

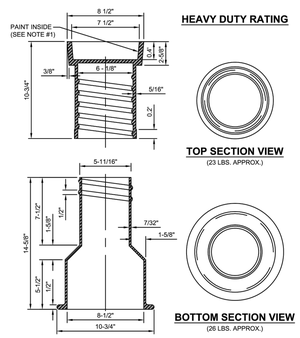

HEAVY DUTY RATING

TOP SECTION VIEW
(23 LBS. APPROX.)

BOTTOM SECTION VIEW
(26 LBS. APPROX.)

NOTES:

1. PAINT THE INSIDE OF THE TOP SECTION OF THE BOX WITH GREEN COLOR.
2. HEAVY DUTY RATING (TOTAL WEIGHT APPROX. 50 LBS.).
3. REFERENCE SECTION 430, PARAGRAPH VI.2.

SEWER SYSTEM VALVE BOX

JANUARY 2019 PLATE S-32

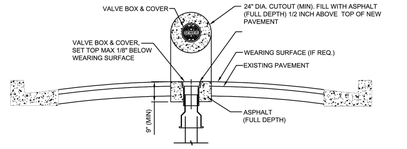

NOTES :

1. PROVIDE FULL DEPTH ASPHALT 1/2 INCH ABOVE TOP OF NEW PAVEMENT LEVEL, TO ALLOW FOR FUTURE ASPHALT MATERIAL COMPACTION. PLACE AND COMPACT ASPHALT IN 2" (MAX) LIFTS.

COVER TO BE SET 1/8" (MAX) BELOW TOP SURFACE

SEWER VALVE JACKET ADJUSTMENT AFTER ROADWAY RE-SURFACING

JANUARY 2019 PLATE S-33

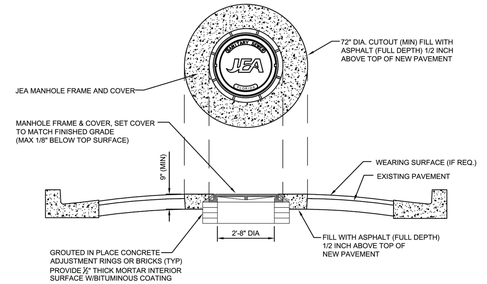

NOTES :

1. PROVIDE FULL DEPTH ASPHALT 1/2 INCH ABOVE TOP OF NEW PAVEMENT LEVEL, TO ALLOW FOR FUTURE ASPHALT MATERIAL COMPACTION. PLACE AND COMPACT ASPHALT IN 2" (MAX) LIFTS.

MANHOLE FRAME AND COVER ADJUSTMENT AFTER ROADWAY RE-SURFACING

JANUARY 2019 PLATE S-34

PVC PIPE RESTRAINT NOTES:

1. THIS SCHEDULE SHALL BE UTILIZED ON ALL WATER, SEWER FORCE MAIN OR RECLAIMED WATER SYSTEMS. ALL FITTINGS SHALL BE RESTRAINED TO LENGTHS INDICATED ON THE ABOVE SCHEDULE, AT A MINIMUM.
2. ASSUMPTIONS: PVC PIPE, SAFETY FACTOR=1.5, TEST PRESSURE=150PSI, SOIL=GM OR SM, TRENCH TYPE 3, DEPTH OF COVER=30 INCHES FOR 20" AND SMALLER PIPE SIZE OR 36 INCHES FOR 24" AND LARGER PIPE SIZE.
3. BENDS AND VALVES: SHALL BE RESTRAINED ON EACH SIDE OF FITTING.
4. VERTICAL OFFSETS: ARE APPROX. 3 FEET COVER ON TOP AND APPROX. 8 FEET COVER ON BOTTOM. PER THE DETAILS, Lu IS THE RESTRAINED LENGTH FOR THE UPPER (TOP) LEVEL. L1 IS THE RESTRAINED LENGTH FOR THE LOWER (DEEPER) LEVEL. ASSUME 45 DEGREE BENDS.
5. TEES: TOTAL LENGTH BETWEEN FIRST JOINTS OR RESTRAINED LENGTH ON EITHER SIDE OF TEE (RUN) SHALL BE A TOTAL DISTANCE OF 30 FEET (MIN). SEE SCHEDULE ABOVE FOR RESTRAINT LENGTH ON TEE "BRANCH" LINE.
6. HDPE TO PVC TRANSITIONS: THE PVC PIPE SIDE SHALL BE RESTRAINED 35 FT (MIN).
7. THE INSTALLATION OF BELL HARNESS RESTRAINTS AT PVC JOINTS (DR-18 & 25 PIPE) SHALL BE COMPLETED PER THE MANUFACTURERS RECOMMENDATION, WHICH INCLUDES NOT OVER TIGHTENING THE PARALLEL RODS/NUTS. THESE NUTS SHOULD ONLY BE SNUG TIGHT. THE HOME MARKS ON THE PIPE SHOULD ALWAYS BE VISIBLE AFTER THE RESTRAINT IS INSTALLED. OVERHOMING THE JOINT MAY CAUSE A FAILURE AT THE BELL RESULTING IN A SERVICE OUTAGE.

LENGTH (L) TO BE RESTRAINED (SEE PLATE Nos. 38C & 38D FOR ADDITIONAL DETAILS)

NOMINAL PIPE SIZE (IN.)	HORIZONTAL BENDS				VERTICAL OFFSETS 45° BENDS (SEE NOTE 4)		VALVES OR DEAD ENDS
	90° BENDS L (FT.)	45° BENDS L (FT.)	22.5° BENDS L (FT.)	11.25° BENDS L (FT.)	UPPER L (FT.)	LOWER L (FT.)	L (FT.)
4	21	9	5	3	17	3	47
6	30	13	6	3	23	4	66
8	38	16	8	4	30	6	86
10	45	19	9	5	36	7	103
12	53	22	11	6	43	8	121
14	61	26	13	6	50	9	140
16	66	28	14	7	55	10	154
18	73	30	15	8	60	11	170
20	79	33	16	8	66	12	186
24	79	33	16	8	77	15	185
30	93	39	19	10	97	17	222
36	106	39	21	11	107	20	257
42	117	49	24	12	120	24	289
48	144	53	26	13	133	26	321

REDUCERS	
SIZE (IN.)	L (FT.)
6x4	34
8x6	36
8x4	62
10x8	35
10x6	63
12x10	36
12x8	64
16x12	66
16x10	92
20x18	35
20x16	66
20x12	117
24x20	56
24x18	80
24x16	101
30x24	78
30x20	121
36x30	78
36x24	141
42x36	75
42x20	140
48x42	75
48x36	139

TEES SEE NOTE 5		
RUN SIZE (IN.)	BRANCH SIZE (IN.)	L (FT.)
4	4	F.O.
4	6	10
	4 < LESS	F.O.
8	8	29
	6 < LESS	F.O.
10	10	45
	8	13
	6 < LESS	F.O.
12	12	62
	10	32
	8 < LESS	F.O.
16	16	94
	12	39
	10	5
	10 < LESS	F.O.
20	20	125
	16	78
	12	14
	10 < LESS	F.O.
24	24	124
	20	84
	16	26
	12 < LESS	F.O.
30	30	159
	24	104
	20	60
	16	5
	16 < LESS	F.O.
36	36	192
	30	142
	24	83
	20	33
	16 < LESS	F.O.
42	42	223
	36	178
	30	124
	24	59
	20	5
	16 < LESS	F.O.
48	48	253
	42	209
	36	162
	30	104
	24	34
	20 < LESS	F.O.

F.O. = FITTING ONLY

PVC PIPE RESTRAINT JOINT SCHEDULE

JANUARY 2019 PLATE S-38A

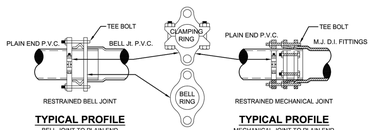

TYPICAL PROFILE
BELL JOINT TO PLAIN END W/MECHANICAL RESTRAINERS

SECTION

TYPICAL PROFILE
MECHANICAL JOINT TO PLAIN END W/MECHANICAL RESTRAINERS

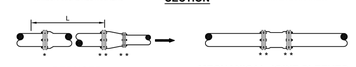

REDUCER

MECHANICAL JOINT SLEEVES

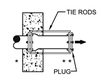

NO. OF TIE RODS REQUIRED

3" - 8"	DIAMETER MAIN - 2 TIE RODS REQUIRED PER JOINT (3/4" ROD)
10" - 12"	DIAMETER MAIN - 4 TIE RODS REQUIRED PER JOINT (3/4" ROD)
14" - 16"	DIAMETER MAIN - 6 TIE RODS REQUIRED PER JOINT (3/4" ROD)
18" - 20"	DIAMETER MAIN - 8 TIE RODS REQUIRED PER JOINT (3/4" ROD)
24"	DIAMETER MAIN - 12 TIE RODS REQUIRED PER JOINT (3/4" ROD)
30" - 36"	DIAMETER MAIN - 14 TIE RODS REQUIRED PER JOINT (1" ROD)
42" - 48"	DIAMETER MAIN - 16 TIE RODS REQUIRED PER JOINT (1 1/4" ROD)
54"	DIAMETER MAIN - 18 TIE RODS REQUIRED PER JOINT (1 1/4" ROD)

DEAD - END THRUST COLLAR ANCHOR

TO BE USED INSTEAD OF TOTAL RESTRAINED LENGTH (OPTIONAL) SIZE AS PER THRUST BLOCK DETAIL (W-38). SEE DETAILS W-36 & W-37.

GENERAL NOTE:

1. PAY ITEM " * " DENOTES A RESTRAINT WHICH IS PAID FOR ON A PER EACH BASIS.
2. PAY ITEM " ** " DENOTES A RESTRAINT WHICH IS INCLUDED IN THE UNIT PRICE BID FOR FITTING OR VALVE.
3. ➡ INDICATES DIRECTION OF THRUST FORCE.

MECHANICAL RESTRAINT DETAILS - I

JANUARY 2019 PLATE S-38C

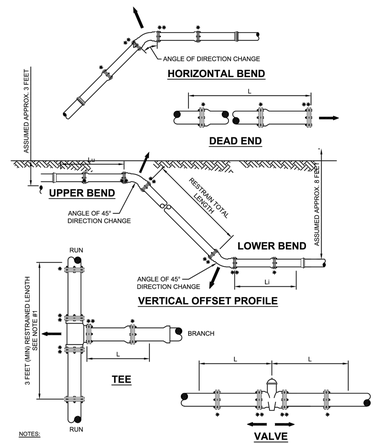

NOTES:

1. TOTAL LENGTH BETWEEN FIRST JOINTS OR RESTRAINED LENGTH ON EITHER SIDE OF TEE (RUN) SHALL BE A TOTAL DISTANCE OF 6 FEET (MIN.). THE PROJECT ENGINEER CAN INCREASE THIS LENGTH TO REDUCE THE NUMBER OF RESTRAINS REQUIRED. ANY CHANGES TO THIS TABLE MUST BE SUMMITTED TO JEA FOR APPROVAL.
2. PAY ITEM "*" DENOTES A RESTRAINT WHICH IS PAID FOR ON A PER EACH BASIC.
3. PAY ITEM "**" DENOTES A RESTRAINT WHICH IS INCLUDED IN THE UNIT PRICE BID FOR FITTING OR VALVE.

MECHANICAL RESTRAINT DETAILS - II

JANUARY 2019 PLATE S-38D

JonesEdmunds
CERTIFICATE OF AUTHORIZATION #1841
730 NE WALDO ROAD, GAINESVILLE, FL 32641 / (352) 377-5821
8657 BAYPINE ROAD SUITE 300, JACKSONVILLE, FL 32256 / (904) 744-5401

NO.	BY	DATE	REVISIONS
6.			
5.			
4.			
3.			
2.			
1.			

DESIGN ENGINEER
KENNETH A. FRASER, PE
FLORIDA REGISTRATION NO.
57452

DESIGNED:	KFRASER	
DRAWN BY:	RWADE	
DATE:	MARCH 30, 2020	
CHECKED BY:	HBRIDGES	
DATE:	MARCH 30, 2020	

JEA Building Community sm

BOULEVARD FORCE MAIN AND WATTER MAIN REPLACEMENT
JEA STANDARD DETAILS

NO. SHEETS	35	
SHEET NO.	21	
DRAWING NO.	D9	
PROJ. NO.	09302-055-01	
DATE:	MARCH 30, 2020	
SCALE:	NONE	

Y:\09302-jea\Projects\055-01 boulevard fm & wm replacement\CAD\Dwgs\Details\09302055D1-009.dwg Current Layout Tab = D11 Fri Mar 27, 2020 - 15:59
Xrefs attached= XHOJO-U-IB [..\Xref\general\XHOJO-U-IB.dwg]

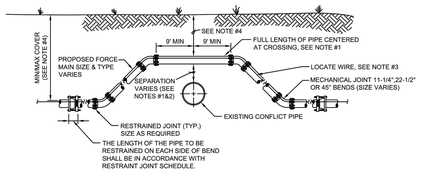

CASE "A" CROSSING

NOTES:

1. IF EXISTING CONFLICT PIPE IS A WATER OR RECLAIMED WATER MAIN, 12-INCHES OF SEPARATION IS REQUIRED. A FULL LENGTH OF PIPE SHALL BE CENTERED OVER EXISTING UTILITY MAIN TO PROVIDE MAXIMUM JOINT SPACING FOR ALL CROSSINGS.
2. FOR OTHER LOCATION LIMITATIONS SEE DETAIL (S-26 & S-27).
3. LOCATING WIRE REQUIRED: SEE DETAIL S-49.
4. THE COVER FOR PIPING LESS THAN 24" SIZE SHALL BE 30" (MIN) IN UNPAVED AREAS, 36" (MIN) IN PAVED AREAS AND A MAXIMUM COVER OF 60", UNLESS PRE-APPROVED BY JEA. THE COVER FOR PIPING 24" SIZE AND LARGER SHALL BE 36" (MIN) IN PAVED AND UNPAVED AREAS AND A MAXIMUM COVER OF 84", UNLESS APPROVED BY JEA.
5. THE SOILS BETWEEN THE MAIN AND THE CONFLICT PIPE SHALL BE COMPACTED TO 98% OF THE MAXIMUM DENSITY AS DETERMINED BY THE LABORATORY MODIFIED PROCTOR TEST ASTM D 1557.

ADJUSTMENT OVER EXISTING UTILITIES MECHANICAL RESTRAINTS

JANUARY 2019 PLATE S-39

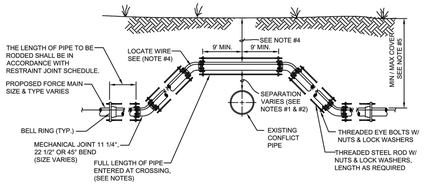

CASE "A" CROSSING

NOTES:

1. IF EXISTING CONFLICT PIPE IS A WATER MAIN12-INCHES OF SEPARATION IS REQUIRED. A FULL LENGTH OF PIPE SHALL BE CENTERED OVER EXISTING UTILITY MAIN TO PROVIDE MAXIMUM JOINT SPACING FOR ALL CROSSINGS.
2. FOR OTHER LOCATION LIMITATIONS SEE DETAIL (S-26 & S-27).
3. NUMBER OF TIE RODS REQUIRED IS AS FOLLOWS:

3" - 8"	DIAMETER MAIN - 2 TIE RODS REQUIRED PER JOINT (3/4" ROD)
10" - 12"	DIAMETER MAIN - 4 TIE RODS REQUIRED PER JOINT (3/4" ROD)
14" - 16"	DIAMETER MAIN - 6 TIE RODS REQUIRED PER JOINT (3/4" ROD)
18" - 20"	DIAMETER MAIN - 8 TIE RODS REQUIRED PER JOINT (3/4" ROD)
24"	DIAMETER MAIN -12 TIE RODS REQUIRED PER JOINT (3/4" ROD)
30" - 36"	DIAMETER MAIN -14 TIE RODS REQUIRED PER JOINT (1" ROD)
42" - 48"	DIAMETER MAIN -16 TIE RODS REQUIRED PER JOINT (1 1/4" ROD)
54"	DIAMETER MAIN -18 TIE RODS REQUIRED PER JOINT (1 1/4" ROD)

4. LOCATING WIRE REQUIRED: SEE DETAIL S-49.
5. THE COVER FOR PIPING LESS THAN 24" SIZE SHALL BE 30" (MIN) IN UNPAVED AREAS, 36" (MIN) IN PAVED AREAS AND A MAXIMUM COVER OF 60", UNLESS PRE-APPROVED BY JEA. THE COVER FOR PIPING 24" SIZE AND LARGER SHALL BE 36" (MIN) IN PAVED AND UNPAVED AREAS AND A MAXIMUM COVER OF 84", UNLESS APPROVED BY JEA.
6. THE SOILS BETWEEN THE MAIN AND THE CONFLICT PIPE SHALL BE COMPACTED TO 98% OF THE MAXIMUM DENSITY AS DETERMINED BY THE LABORATORY MODIFIED PROCTOR TEST ASTM D 1557.

ADJUSTMENT OVER EXISTING UTILITIES TIR RODS

JANUARY 2019 PLATE S-40

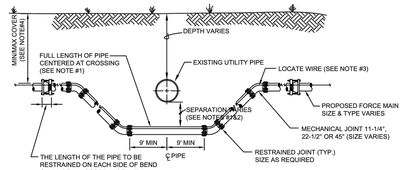

CASE "B" CROSSING

NOTES:

1. IF EXISTING CONFLICT PIPE IS A WATER OR RECLAIMED WATER MAIN, 12-INCHES OF SEPARATION IS REQUIRED.A FULL LENGTH OF PIPE SHALL BE CENTERED OVER EXISTING UTILITY MAIN TO PROVIDE MAXIMUM JOINT SPACING FOR ALL CROSSINGS.
2. FOR OTHER LOCATION LIMITATIONS SEE DETAIL (S-26 & S-27).
3. LOCATING WIRE REQUIRED: SEE DETAIL S-49.
4. THE COVER FOR PIPING LESS THAN 24" SIZE SHALL BE 30" (MIN) IN UNPAVED AREAS, 36" (MIN) IN PAVED AREAS AND A MAXIMUM COVER OF 60", UNLESS PRE-APPROVED BY JEA. THE COVER FOR PIPING 24" SIZE AND LARGER SHALL BE 36" (MIN) IN PAVED AND UNPAVED AREAS AND A MAXIMUM COVER OF 84", UNLESS APPROVED BY JEA.
5. THE SOILS BETWEEN THE MAIN AND THE CONFLICT PIPE SHALL BE COMPACTED TO 98% OF THE MAXIMUM DENSITY AS DETERMINED BY THE LABORATORY MODIFIED PROCTOR TEST ASTM D 1557.

ADJUSTMENT UNDER EXISTING UTILITIES MECHANICAL RESTRAINTS

JANUARY 2019 PLATE S-41

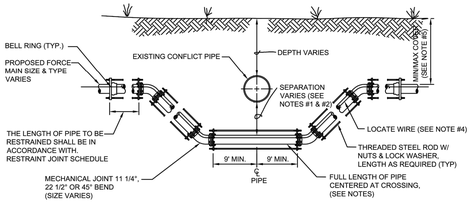

CASE "B" CROSSING

NOTES:

1. IF EXISTING CONFLICT PIPE IS A WATER OR RECLAIM WATER MAIN, 12-INCHES OF SEPARATION IS REQUIRED. A FULL LENGTH OF PIPE SHALL BE CENTERED OVER EXISTING UTILITY MAIN TO PROVIDE MAXIMUM JOINT SPACING FOR ALL CROSSINGS.
2. FOR OTHER LOCATION LIMITATIONS SEE DETAIL (S-26 & S-27).
3. NUMBER OF TIE RODS REQUIRED IS AS FOLLOWS:

3" - 8"	DIAMETER MAIN - 2 TIE RODS REQUIRED PER JOINT (3/4" ROD)
10" - 12"	DIAMETER MAIN - 4 TIE RODS REQUIRED PER JOINT (3/4" ROD)
14" - 16"	DIAMETER MAIN - 6 TIE RODS REQUIRED PER JOINT (3/4" ROD)
18" - 20"	DIAMETER MAIN - 8 TIE RODS REQUIRED PER JOINT (3/4" ROD)
24"	DIAMETER MAIN -12 TIE RODS REQUIRED PER JOINT (3/4" ROD)
30" - 36"	DIAMETER MAIN -14 TIE RODS REQUIRED PER JOINT (1" ROD)
42" - 48"	DIAMETER MAIN -16 TIE RODS REQUIRED PER JOINT (1 1/4" ROD)
54"	DIAMETER MAIN -18 TIE RODS REQUIRED PER JOINT (1 1/4" ROD)

4. LOCATING WIRE REQUIRED: SEE DETAIL S-49.
5. THE COVER FOR PIPING LESS THAN 24" SIZE SHALL BE 30" (MIN) IN UNPAVED AREAS, 36" (MIN) IN PAVED AREAS AND A MAXIMUM COVER OF 60", UNLESS PRE-APPROVED BY JEA. THE COVER FOR PIPING 24" SIZE AND LARGER SHALL BE 36" (MIN) IN PAVED AND UNPAVED AREAS AND A MAXIMUM COVER OF 84", UNLESS APPROVED BY JEA.
6. THE SOILS BETWEEN THE MAIN AND THE CONFLICT PIPE SHALL BE COMPACTED TO 98% OF THE MAXIMUM DENSITY AS DETERMINED BY THE LABORATORY MODIFIED PROCTOR TEST. ASTM D 1557.

ADJUSTMENT UNDER EXISTING UTILITIES TIE RODS

JANUARY 2019 PLATE S-42

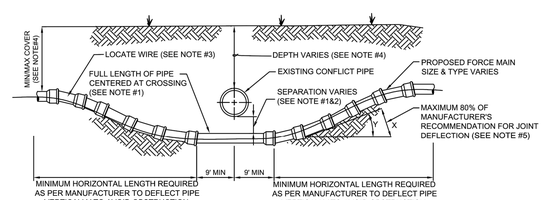

CASE "B" CROSSING

NOTES:

1. IF EXISTING CONFLICT PIPE IS A WATER MAIN OR RECLAIM WATER MAIN, 12-INCHES OF SEPARATION IS REQUIRED. A FULL LENGTH OF PIPE SHALL BE CENTERED OVER EXISTING UTILITY MAIN TO PROVIDE MAXIMUM JOINT SPACING FOR ALL CROSSING.
2. FOR OTHER LOCATION LIMITATIONS SEE DETAIL (S-26 & S-27).
3. LOCATING WIRE REQUIRED: SEE DETAIL S-49.
4. THE COVER OVER ALL PIPING LESS THAN 24" SIZE SHALL BE A MINIMUM OF 30" IN UNPAVED AREAS AND 36" IN PAVED AREAS WITH A MAXIMUM COVER OF 60" UNLESS APPROVED OTHERWISE BY JEA. COVER FOR PIPING 24" SIZE AND LARGER SHALL BE MINIMUM OF 36" (PAVED AND UNPAVED) AND MAXIMUM OF 84" UNLESS APPROVED OTHERWISE BY JEA. THE SOILS BETWEEN THE NEW MAIN AND THE CONFLICT PIPE SHALL BE COMPACTED TO 98% OF THE MAXIMUM DENSITY AS DETERMINED BY THE LABORATORY MODIFIED PROCTOR TEST ASTM D 1557.
5. JEA ONLY ALLOWS 80% OF THE PIPE MANUFACTURER'S RECOMMENDATION FOR JOINT DEFLECTION. BENDING THE PIPE BARREL IS NOT ALLOWED. UNLESS OTHERWISE APPROVED BY JEA, THE MAXIMUM ARE LISTED IN TABLE BELOW. ONLY MANUAL FORCE CAN BE UTILIZED TO OBTAIN THESE JOINT DEFLECTION. ALL OFFSETS ARE BASED ON MINIMUM 20LF PIPE LENGTH.

MAXIMUM ALLOWED OFFSET FOR PIPE BY JOINT DEFLECTION

PVC PIPE

PIPE SIZE (IN.)	(X) MAX. OFFSET (IN.)	(Y) ANGLE AT ONE BELL	RESULTING RADIUS OF CURVE WITH 20FT. LENGTHS
2	30	7°	158 FT
4	10	2.4°	480 FT
6	10	2.4°	480 FT
8	10	2.4°	480 FT
10	10	2.4°	480 FT
12	8.5	2°	564 FT
14 - 24	5	1.2°	960 FT
30 - 48	3.25	0.8°	1477 FT

ADJUSTMENT UNDER EXISTING UTILITIES PIPE JOINT DEFLECTION

JANUARY 2019 PLATE S - 47

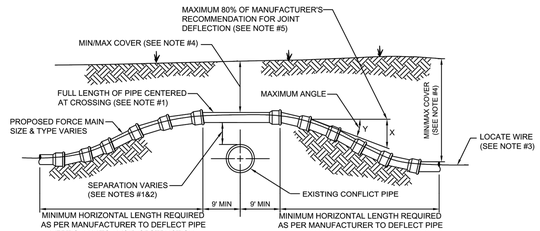

CASE "A" CROSSING

NOTES:

1. IF EXISTING CONFLICT PIPE IS A WATER MAIN OR RECLAIM WATER MAIN, 12-INCHES OF SEPARATION IS REQUIRED. A FULL LENGTH OF PIPE SHALL BE CENTERED OVER EXISTING UTILITY MAIN TO PROVIDE MAXIMUM JOINT SPACING FOR ALL CROSSING.
2. FOR OTHER LOCATION LIMITATIONS SEE DETAIL (S-26 & S-27).
3. LOCATING WIRE REQUIRED: SEE DETAIL S-49.
4. THE COVER OVER ALL PIPING LESS THAN 24" SIZE SHALL BE A MINIMUM OF 30" IN UNPAVED AREAS AND 36" IN PAVED AREAS WITH A MAXIMUM COVER OF 60" UNLESS APPROVED OTHERWISE BY JEA. COVER FOR PIPING 24" SIZE AND LARGER SHALL BE MINIMUM OF 36" (PAVED AND UNPAVED) AND MAXIMUM OF 84" UNLESS APPROVED OTHERWISE BY JEA. THE SOILS BETWEEN THE NEW MAIN AND THE CONFLICT PIPE SHALL BE COMPACTED TO 98% OF THE MAXIMUM DENSITY AS DETERMINED BY THE LABORATORY MODIFIED PROCTOR TEST ASTM D 1557.
5. JEA ONLY ALLOWS 80% OF THE PIPE MANUFACTURER'S RECOMMENDATION FOR JOINT DEFLECTION. BENDING THE PIPE BARREL IS NOT ALLOWED. UNLESS OTHERWISE APPROVED BY JEA, THE MAXIMUM ARE LISTED IN TABLE BELOW. ONLY MANUAL FORCE CAN BE UTILIZED TO OBTAIN THESE JOINT DEFLECTION. ALL OFFSETS ARE BASED ON MINIMUM 20LF PIPE LENGTH.

MAXIMUM ALLOWED OFFSET FOR PIPE BY JOINT DEFLECTION

PVC PIPE

PIPE SIZE (IN.)	(X) MAX. OFFSET (IN.)	(Y) ANGLE AT ONE BELL	RESULTING RADIUS OF CURVE WITH 20FT. LENGTHS
2	30	7°	158 FT
4	10	2.4°	480 FT
6	10	2.4°	480 FT
8	10	2.4°	480 FT
10	10	2.4°	480 FT
12	8.5	2°	564 FT
14 - 24	5	1.2°	960 FT
30 - 48	3.25	0.8°	1477 FT

ADJUSTMENT OVER EXISTING UTILITIES PIPE JOINT DEFLECTION

JANUARY 2019 PLATE S-48

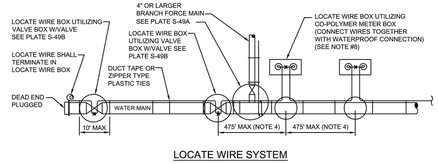

LOCATE WIRE SYSTEM

NOTES:

1. LOCATING WIRE TO BE INSTALLED IN EITHER THE ONE OR ELEVEN O'CLOCK POSITION ON ALL DUCTILE IRON OR PVC (PRESSURE MAINS). LOCATE WIRE SHALL ALSO BE INSTALLED ON ALL (HDPE) POLY MAIN PIPING (1:00 OR 11:00 POSITION, IF POSSIBLE).
2. SECURE LOCATING WIRE TO PVC FORCE MAIN BY USE OF DUCT TAPE OR ZIPPER TYPE PLASTIC TIE STRAPS SPACED AT A MAXIMUM DISTANCE OF TEN (10') AND AT EACH SIDE OF BELL JOINT OR FITTING.
3. THE ENTIRE LOCATING SYSTEM SHALL BE SUBJECTED TO TESTING TO DETERMINE ITS RELIABILITY. WHERE INSTALLED UNDER PAVEMENT AREAS, TESTING SHALL BE DONE PRIOR TO THE PLACEMENT OF PAVEMENT, UNLESS APPROVED OTHERWISE BY JEA.
4. LOCATING WIRE SHALL TERMINATE WITHIN AN ACTIVE VALVE BOX (WITH A VALVE) OR A METER BOX (IF NO VALVE) AT 475' INTERVALS. SEE DETAIL PLATE S-49B. WIRE CONNECTIONS BELOW GROUND (OUTSIDE OF A BOX) SHALL BE AVOIDED.
5. LOCATING WIRE SHALL BE 12 GAUGE COPPER WIRE WITH .03 INCHES (MINUMUM) HDPE INSULATION THICKNESS, 0.141 INCHES (MINIMUM) O.D. RATED BREAK LOAD 250LBS., UF RATED (DIRECT BURIAL), GREEN COLOR. FOR HDD INSTALLATIONS, THE LOCATE WIRE SHALL BE COPPER CODED STEEL AS SPECIFIED IN SPEC. SECTION 750.
6. ⋋ INDICATES THAT THE WIRES ARE CONNECTED TOGETHER WITH WATERPROOF CONNECTION. (SEE DETAIL W-49B)
7. ⓣ INDICATES A WIRE PIG-TAIL (24" LONG)
8. AN "LW" CUT SHALL BE CARVED IN THE CONCRETE CURB AND PAINTED AT ALL LOCATE WIRE BOXES.
9. FOUR LANES OF TRAFFIC (HAVING TWO LANES OF TRAFFIC IN EACH DIRECTION) OR GREATER THE LOCATE WIRE AND VALVE BOX SHALL BE OFF-SET TO THE RIGHT-OF-WAY.

LOCATE WIRE CONSTRUCTION FOR FORCE MAINS

JANUARY 2019 PLATE S-49

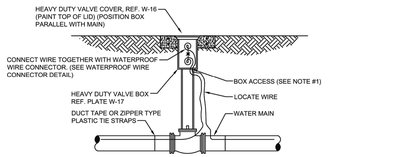

LOCATE WIRE BOX UTILIZING VALVE BOX

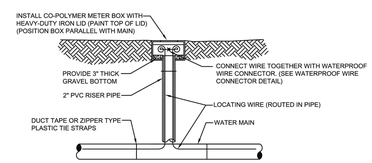

LOCATE WIRE BOX UTILIZING METER BOX

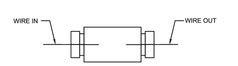

WATERPROOF WIRE CONNECTOR DETAIL

NOTES:

1. LOCATE WIRE SHALL ENTER THE VALVE BOX THROUGH A "V" CUT IN THE 6" PVC RISER PIPE (SEE W-16).
2. LOCATE WIRE SHALL HAVE ENOUGH SLACK TO REACH 4' ABOVE FINAL GRADE AND LOCATE POINTS.
3. LOCATE WIRE CONNECTION SHALL ONLY BE A 2 WAY CONNECTION.

LOCATE WIRE BOX

JANUARY 2019 PLATE S-49B

JonesEdmunds
CERTIFICATE OF AUTHORIZATION #1841
730 NE WALDO ROAD, GAINESVILLE, FL 32641 / (352) 377-5821
8657 BAYPINE ROAD SUITE 300, JACKSONVILLE, FL 32256 / (904) 744-5401

NO.	BY	DATE	REVISIONS
6.			
5.			
4.			
3.			
2.			
1.			

DESIGN ENGINEER
KENNETH A. FRASER, PE
FLORIDA REGISTRATION NO.
57452

DESIGNER:	KFRASER
DRAWN BY:	RWADE
DATE:	MARCH 30, 2020
CHECKED BY:	HBRIDGES
DATE:	MARCH 30, 2020

JEA Building Community sm

BOULEVARD FORCE MAIN AND WATER MAIN REPLACEMENT
JEA STANDARD DETAILS

PROJ. NO.	09302-055-01
DATE:	MARCH 30, 2020
SCALE:	NONE

NO. SHEETS	35
SHEET NO.	22
DRAWING NO.	D10

Y:\09302-jea\Projects\055-01 boulevard frm & wm replacement\CAD\Dwgs\Details\0930205501-D10.dwg Current Layout Tab = D12 Fri Mar 27, 2020 - 15:59
Xrefs Attached= XRUDS-U-18 [..\Xref\general\XRUDS-U-18.dwg]

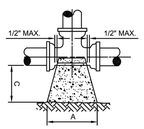

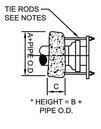

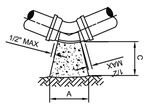

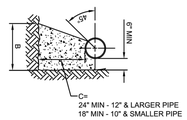

THRUST BLOCK FOR TEES & PLUGS				
	90° BEND			S.F. BEARING
SIZE	A	B	C	SURFACE
4"	16"	16"	18"	1.78
6"	20"	24"	18"	3.33
8"	26"	32"	18"	5.78
10"	32"	40"	18"	8.89
12"	36"	48"	24"	12.00
14"	40"	56"	24"	15.56
16"	48"	60"	24"	20.00
18"	56"	64"	24"	24.89
20"	60"	76"	24"	31.67
24"	72"	90"	24"	45.00
30"	86"	102"	24"	60.67
36"	116"	108"	24"	86.11

NOTES:

1. ALL BEARING SURFACES TO BE CARRIED TO UNDISTURBED SOIL.
2. THESE TABLES SHOW MINIMUM SIZES FOR THRUST BLOCKS IN GOOD SOIL (A-1 THRU A-3, CLEAN SANDS AND GRAVELS) WITH MINIMUM BEARING CAPACITY OF 2000 psi.
3. POOR SOILS A-4 THRU A-8, SILTY SOILS, CLAYS, MUCK AND PEAT WILL REQUIRE LARGER THRUST BLOCKING.
4. BOTH CONCRETE THRUST BLOCKS AND TIE RODS MUST BE USED WHEN, IN THE JUDGEMENT OF THE ENGINEER, THE NATURE AND CRITICALITY OF AN INSTALLATION IS SUCH AS TO REQUIRE POSITIVE ASSURANCE OF STABILITY.
5. THE USE OF THRUST BLOCKS SHALL BE LIMITED TO SITUATIONS SUCH AS POINT REPAIR WHERE EXPOSING SEVERAL JOINTS OF PIPE IS NOT FEASIBLE DUE TO EXISTING GROUND CONDITIONS.
6. CONCRETE COLLARS WITH TIE RODS MAY BE USED ON DEAD END LINES AT THE CONTRACTOR'S DISCRETION. NUMBER OF TIE RODS REQUIRED IS AS FOLLOWS:
   - 3" - 8" DIAMETER MAIN - 2 TIE RODS REQUIRED PER JOINT (3/4" ROD)
   - 10" - 12" DIAMETER MAIN - 4 TIE RODS REQUIRED PER JOINT (3/4" ROD)
   - 14" - 16" DIAMETER MAIN - 6 TIE RODS REQUIRED PER JOINT (3/4" ROD)
   - 18" - 20" DIAMETER MAIN - 8 TIE RODS REQUIRED PER JOINT (3/4" ROD)
   - 24" DIAMETER MAIN -12 TIE RODS REQUIRED PER JOINT (3/4" ROD)
   - 30" - 36" DIAMETER MAIN -14 TIE RODS REQUIRED PER JOINT (1" ROD)
   - 42" - 48" DIAMETER MAIN -16 TIE RODS REQUIRED PER JOINT (1 1/4" ROD)
   - 54" DIAMETER MAIN -18 TIE RODS REQUIRED PER JOINT (1 1/4" ROD)
7. MAXIMUM TEST PRESSURE TO BE 150 PSI.

THRUST BLOCK FOR BENDS															
	90° BEND			S.F. BEARING	45° BEND			S.F. BEARING	22-1/2° BEND			S.F. BEARING	11-1/4° BEND			S.F. BEARING
SIZE	A	B	C	SURFACE	A	B	C	SURFACE	A	B	C	SURFACE	A	B	C	SURFACE
4"	16"	16"	18"	1.78	14"	16"	18"	1.56	14"	16"	18"	1.56	14"	16"	18"	1.56
6"	22"	32"	18"	4.89	16"	18"	18"	2.00	14"	16"	18"	1.56	14"	16"	18"	1.56
8"	32"	36"	18"	8.00	24"	28"	18"	4.67	16"	18"	18"	2.00	14"	16"	18"	1.56
10"	36"	46"	18"	11.50	26"	36"	18"	6.50	20"	24"	18"	3.33	14"	18"	18"	1.75
12"	44"	56"	24"	17.11	32"	40"	24"	8.89	24"	30"	24"	5.00	16"	20"	24"	2.22
14"	52"	62"	24"	22.39	36"	48"	24"	12.00	26"	36"	24"	6.50	20"	24"	24"	3.33
16"	58"	72"	24"	29.00	40"	54"	24"	15.00	32"	38"	24"	8.44	22"	26"	24"	3.97
18"	64"	80"	24"	35.56	46"	60"	24"	19.17	36"	42"	24"	10.50	24"	32"	24"	5.33
20"	72"	88"	24"	44.00	52"	66"	24"	23.83	38"	46"	24"	12.67	26"	36"	24"	6.50
24"	96"	96"	24"	36.89	64"	78"	24"	34.67	46"	56"	24"	17.89	32"	40"	24"	8.89
30"	122"	102"	24"	86.11	72"	94"	24"	47.00	56"	62"	24"	24.11	36"	48"	24"	12.00
36"	166"	104"	24"	123.33	88"	108"	24"	66.00	64"	78"	24"	34.67	44"	54"	24"	16.50

THRUST BLOCK SIZE CHART

JANUARY 2019 PLATE W-38

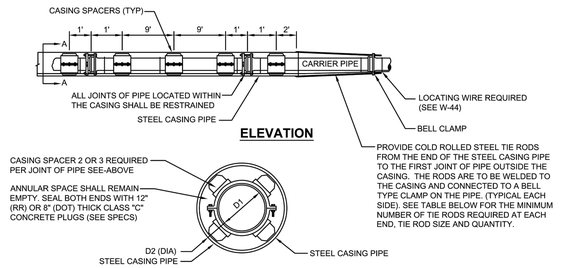

ELEVATION

SECTION "A-A"

CARRIER TYPE AND CASING PIPE SIZES (MIN) IN INCHES															
CARRIER PIPE NO. DIA. (D_1)	4	6	8	10	12	14	16	18	20	24	30	36	42	48	
CASING PIPE NOM. DIA. (D_2)	14	16	20	20	24	30	30	30	36	42	48	54	60	66	
WALL THICKNESS RAILROAD-(FEC)	0.25	1.25	0.375	0.375	0.375	0.50	0.50	0.50	0.562	0.625	0.625	0.688	0.781	0.781	
WALL THICKNESS RAILROAD-(CSX)	0.25	0.281	0.375	0.375	0.375	0.469	0.469	0.469	0.562	0.625	0.688	0.781	0.844	0.938	
WALL THICKNESS DOT	0.25	0.25	0.25	0.25	0.25	0.312	0.312	0.312	0.375	0.50	0.50	0.50	0.50	0.50	
NUMBER OF TIE RODS (EACH END)	2	2	2	4	4	6	6	8	8	12	14	14	16	16	
TIE ROD SIZE (DIA.)	3/4"	3/4"	3/4"	3/4"	3/4"	3/4"	3/4"	3/4"	3/4"	3/4"	1"	1"	1 1/4"	1 1/4"	

PIPE MAIN CROSSINGS FOR RAILROADS OR HIGHWAYS

NOTES:

1. MIN. COVER TO TOP OF CASING; a) FDOT-3.0' b)RAILROAD-5.5' TO BASE OF RAIL, 4.5' FOR SECONDARY OR INDUSTRIAL TRACKS. EXCEPT FOR F..E.C. (SEE NOTE 3)
2. THE INSIDE DIAMETER OF THE CASING PIPE SHALL BE A MINIMUM OF 4 INCHES GREATER THAN THE OUTSIDE DIAMETER OF THE CARRIER PIPE BELL OR COUPLING. HOWEVER, A MINIMUM OF 6 INCHES IS REQUIRED FOR FLORIDA EAST COAST R.R. CROSSINGS.
3. THE MINIMUM COVER FOR CASING UNDER FLORIDA EAST COAST RAILROAD SHALL BE 5.0 FEET BELOW THE BOTTOM OF TIES FOR ALL TRACKS.
4. ALL JOINTS WITHIN CARRIES PIPE SHALL BE MECHANICAL RESTRAINED JOINTS.
5. FOR STREET USES WHICH ARE NOT DOT OR RAILROAD, USE DOT CASING THICKNESS UNLESS OTHERWISE INDICATED BY ENGINEER.
6. CASING PIPE SHALL BE FURNISHED IN NOMINAL 8 FOOT LENGTHS (MIN.) UNLESS OTHERWISE INDICATED ON THE DRAWING OR APPROVED BY JEA.
7. PIPE TO BE USED AS A CASING SHALL CONFORM TO EITHER ASTM STANDARD A139 FOR "ELECTRIC FUSION (ARC) WELDED STEEL PIPE". WITH A MINIMUM YIELD STRENGTH OF 35,000 PSI OR "API SPECIFICATION API-5LX, GRADE X-42 WELDED STEEL PIPE".

TYPICAL CASING DETAIL - WATER

JANUARY 2019 PLATE W-30

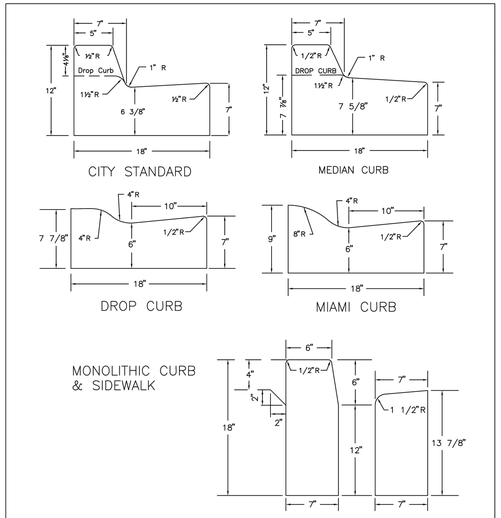

CONCRETE QUANTITES

CITY STANDARD CURB	.0388889 CU. YD./LIN. FT.
STANDARD DROP CURB	.0322222 CU. YD./LIN. FT.
MEDIAN CURB	.0411111 CU. YD./LIN. FT.
MIAMI CURB	.0325926 CU. YD./LIN. FT.
HEADER CURB	.0314815 CU. YD./LIN. FT.
HEADER DROP CURB	.0244444 CU. YD./LIN. FT.

CITY STANDARD CURB TEMPLATES	*CITY OF JACKSONVILLE STANDARD*	N.T.S.	PLATE P-301
		DATE DRAWN	11-07-72
		REVISED DATE	08-12-81

CASE III

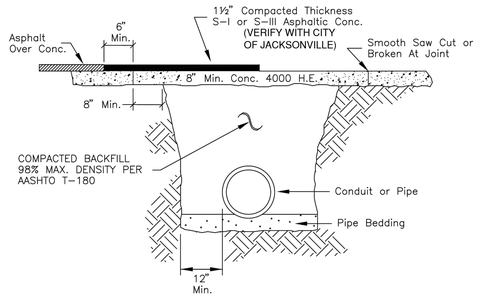

Note: Method And Materials Of Repair Subject To City Of Jacksonville Construction Requirements For New Pavement S-I Or S-III Asphaltic Conc.

STANDARD PAVING REPAIR DETAIL	*CITY OF JACKSONVILLE STANDARD*	N.T.S.	PLATE P-404
		DATE DRAWN	4/80
		REVISED DATE	9/22/97

CASE IV

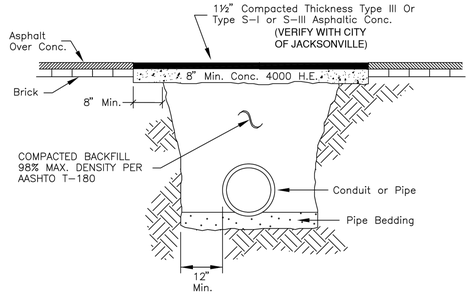

Note: Method And Materials Of Repair Subject To City Of Jacksonville Construction Requirements For New Pavement Type III, Type S-I Or S-III Asphaltic Conc.

STANDARD PAVING REPAIR DETAIL	*CITY OF JACKSONVILLE STANDARD*	N.T.S.	PLATE P-405
		DATE DRAWN	5/80
		REVISED DATE	9/23/97

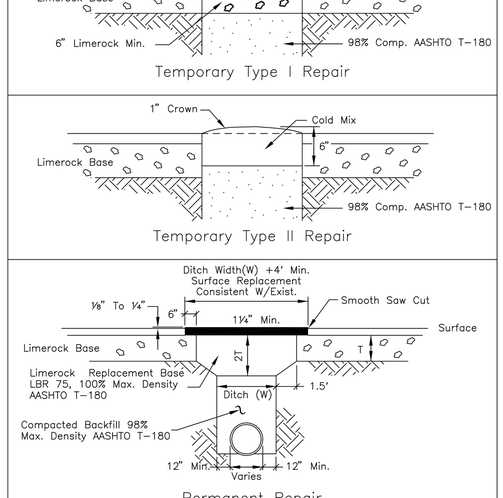

Note: In Some Cases Portland Cement Concrete May Be Considered Or Required By City Engineer For Surface Replacement.

STANDARD PAVING REPAIR DETAILS	*CITY OF JACKSONVILLE STANDARD*	N.T.S.	PLATE P-409
		DATE DRAWN	7-6-73
		REVISED DATE	9-18-96

JonesEdmunds
CERTIFICATE OF AUTHORIZATION #1841
730 NE WALDO ROAD, GAINESVILLE, FL 32641 / (352) 377-5821
8657 BAYPINE ROAD SUITE 300, JACKSONVILLE, FL 32256 / (904) 744-5401

NO.	BY	DATE	REVISIONS
6.			
5.			
4.			
3.			
2.			
1.			

DESIGN ENGINEER: KENNETH A. FRASER, PE
FLORIDA REGISTRATION NO. 57452

DESIGNER:	KFRASER	
DRAWN BY:	RWADE	
DATE:	MARCH 30, 2020	
CHECKED BY:	HERIDGES	
DATE:	MARCH 30, 2020	

JEA Building Community sm

BOULEVARD FORCE MAIN AND WATER MAIN REPLACEMENT
JEA STANDARD DETAILS

NO. SHEETS	35	PROJ. NO.	09302-055-01
SHEET NO.	23	DATE:	MARCH 30, 2020
DRAWING NO.	D11	SCALE:	NONE

Y:\09302-jea\Projects\055-01 boulevard fm & wm replacement\CAD\Dwgs\Details\093020501-D11.dwg Current Layout Tab = D13 Fri Mar 27, 2020 - 15:59
Xrefs Attached= XRJDS-G-1a [..\Xref\general\XRJDS-G-1a.dwg]

TEMPORARY TRAFFIC CONTROL GENERAL NOTES

1. ALL TTC SHALL BE IN CONFORMANCE WITH FDOT INDEX 600 AND MUTCD STANDARDS – PART 6, TEMPORARY TRAFFIC CONTROL.
2. CONTRACTOR SHALL NOTIFY THE CITY OF JACKSONVILLE TRAFFIC ENGINEERING DIVISION (904–255–7533) AND THE FLORIDA DEPARTMENT OF TRANSPORTATION A MINIMUM OF 5 WORKING DAYS PRIOR TO IMPLEMENTATION OF THE TTC.
3. THE CONTRACTOR SHALL PROVIDE THE CITY OF JACKSONVILLE TRAFFIC ENGINEERING DIVISION WITH THE NAME OF THE PERSON ON THE CONTRACTOR'S STAFF DESIGNATED TO BE RESPONSIBLE FOR THE IMPLEMENTATION OF ALL PHASES OF TTC PRIOR TO THE BEGINNING OF CONSTRUCTION.
4. THE CONTRACTOR SHALL RESTORE PAVEMENT SURFACE INCLUDING PAVEMENT MARKINGS TO A SAFE DRIVABLE CONDITION BEFORE OPENING THE WORK ZONE TO TRAFFIC.
5. THE REFLECTIVE SHEETING ON SIGNS, DRUMS OR BARRICADES SCRATCHED OR DAMAGED TO THE POINT THAT REFLECTIVITY IS IMPAIRED SHALL BE REPLACED. DAMAGED, DEFACED OR DIRTY SIGNS, CONES OR BARRICADES SHALL IMMEDIATELY BE REPAIRED, REPLACED OR CLEANED BY THE CONTRACTOR.
6. THE CONTRACTOR SHALL BE RESPONSIBLE FOR PERFORMING FORMAL TTC INSPECTIONS AND SHALL IMMEDIATELY REPLACE ALL EQUIPMENT AND DEVICES NOT CONFORMING TO FDOT STANDARDS. THESE INSPECTIONS SHALL TAKE PLACE AT LEAST ONCE A DAY AND SOME OF THESE INSPECTIONS SHALL BE CONDUCTED AT NIGHT. THE JEA SHALL BE ADVISED OF THE SCHEDULE OF THE INSPECTIONS AND BE GIVEN THE OPPORTUNITY TO JOIN IN THE INSPECTION.
7. SHORT TERM STOPPING OR PARKING OF A VEHICLE, OR PLACING ANYTHING ELSE NEXT TO THE WORK AREA (FOR EXAMPLE, A STACK OF CONES, PARKED CONSTRUCTION EQUIPMENT/VEHICLES, ETC.) CREATES A CHANNEL EFFECT WHICH CAN ADVERSELY AFFECT TRAFFIC FLOW. THEREFORE, ALL CONSTRUCTION EQUIPMENT SHALL BE PLACED A MINIMUM OF 15 FEET FROM THE TRAVEL LANE WHEN NOT IN USE IN ACCORDANCE WITH FDOT INDEX 601.
8. ALL DROP OFFS ALONG CONSTRUCTION WORK AREAS SHALL BE HANDLED AS PER FDOT INDEX 600 CURRENT EDITION.
9. CONTRACTOR SHALL BACKFILL COMPLETELY AT THE END OF EACH WORK PERIOD WHEN WORKING WITHIN THE TRAVEL WAY OR THE OPEN TRENCH CAN BE ADDRESSED AS A DROP OFF IN ACCORDANCE WITH NOTE 8 ABOVE.
10. TRAFFIC CONDITIONS, ACCIDENTS AND OTHER EMERGENCY CONDITIONS MAY REQUIRE THE OWNER TO MODIFY ANY CHANNELIZATION SHOWN IN THESE PLANS, THE CONTRACTOR SHALL MAKE THE NECESSARY ADJUSTMENTS, AS DIRECTED BY THE CITY OF JACKSONVILLE TRAFFIC ENGINEERING DIVISION OR THE JEA, WITHOUT DELAY.
11. DUST CONTROL MEASURES SHALL BE IMPLEMENTED ON ALL UNPAVED SURFACES UNTIL PAVED OR GROUND COVER IS ESTABLISHED.
12. THE CONTRACTOR SHALL RETURN THE GROUND TO ITS ORIGINAL CONDITION AND ELEVATION WHEN REMOVING ANY TEMPORARY PAVEMENT.
13. THE CONTRACTOR SHALL, AS REQUIRED, PROVIDE TEMPORARY DRAINAGE DURING CONSTRUCTION, AS NEEDED.
14. THE CONTRACTOR SHALL NOTIFY THE JACKSONVILLE FIRE AND RESCUE DEPARTMENT (904–630–0529) A MINIMUM OF 48 HOURS PRIOR TO IMPLEMENTATION OF ANY ROAD CLOSURES OR DETOURS ALONG WITH ANTICIPATED TIME FRAME OF CLOSURE.
15. THE CONTRACTOR SHALL, AS REQUIRED, PROVIDE TEMPORARY PAVEMENT DURING CONSTRUCTION, AS NEEDED.
16. TEMPORARY TRAFFIC CONTROL PLANS WITHIN FDOT RIGHT–OF–WAY ARE SUBJECT TO FDOT APPROVAL.
17. THE CONTRACTOR SHALL COORDINATE TRAFFIC SIGNAL OPERATION WITH THE CITY OF JACKSONVILLE TRAFFIC ENGINEERING DIVISION.
18. TRAFFIC SIGNAL LOOPS SHALL BE RESTORED TO PROPER OPERATION WITHIN 36 HOURS OF BEING DESTROYED, DAMAGED OR AT THE COMPLETION OF WORK ZONE CONSTRUCTION. CONTACT MASON BOYD (255–7549) A MINIMUM OF 48 HOURS PRIOR TO CUTTING ANY VEHICLE LOOPS.
19. TRAFFIC SIGNAL ACTUATION SHALL BE MAINTAINED AT ALL TIMES, UNLESS OTHERWISE APPROVED BY THE CITY OF JACKSONVILLE TRAFFIC ENGINEERING DIVISION. INFRARED–DETECTION MAY BE USED IF REQUIRED.
20. THE CONTRACTOR SHALL CONFINE THEIR WORK ACTIVITY TO NO MORE THAN ONE BLOCK AT A TIME.

SPECIAL FLAGGER CONTROL NOTES

1. THE CONTRACTORS SELECTION OF MEANS, METHODS, TECHNIQUES AND SEQUENCE OF CONSTRUCTION MAY REQUIRE PERIODIC FLAGGER CONTROL.
2. IT MAY BE ADVISABLE TO EMPLOY FLAGGERS FOR THE SAFETY OF THE MOTORING PUBLIC WHEN MOVING EQUIPMENT AND HANDLING MATERIAL.
3. IT WILL BE INCUMBENT UPON THE CONTRACTOR TO DETERMINE WHEN THEIR OPERATIONS REQUIRE FLAGGER CONTROL.
4. FLAGGING OPERATIONS SHALL BE PERFORMED IN ACCORDANCE WITH FDOT STANDARDS AND ALL FLAGGERS SHALL BE FDOT CERTIFIED.

TEMPORARY TRAFFIC CONTROL HURRICANE NOTE

1. IN THE EVENT A HURRICANE IS THREATENING THE JACKSONVILLE AREA, IMPLEMENTATION OF THESE TTC PLANS SHALL BE HELD IN ABEYANCE UNTIL THE THREAT PASSES AND FDOT SHALL BE GIVEN A 12 HOUR NOTICE OF CLOSURE.

TEMPORARY TRAFFIC CONTROL REQUIREMENTS

1. PROJECT WORK HOURS ARE AS DIRECTED BY THE JEA.
2. ACCESS FOR LOCAL TRAFFIC WITH DESTINATIONS WITHIN THE WORK AREA SHALL BE MAINTAINED TO THE EXTENT SAFETY WILL PERMIT. BUSINESS ACCESS SHALL NOT BE BLOCKED DURING DAYTIME HOURS.
3. THE CONTRACTOR SHALL COORDINATE WITH JEA AND BUSINESSES FOR LOCATING TEMPORARY BUSINESS ACCESS SIGNS AS THE WORK ZONES CHANGE.
4. ACCESS TO INTERSECTING SIDE STREETS SHALL BE MAINTAINED AT ALL TIMES UNLESS OTHERWISE NOTED WITHIN THESE TTC PLANS.
5. ANY MODIFICATIONS TO THESE TEMPORARY TRAFFIC CONTROL PLANS SHALL BE SUBMITTED TO THE CITY OF JACKSONVILLE TRAFFIC ENGINEERING DIVISION FOR REVIEW AND APPROVAL PRIOR TO IMPLEMENTATION.
6. THE CONTRACTOR HAS THE OPTION TO SUBMIT ALTERNATIVE TRAFFIC CONTROL PLANS FOR APPROVAL BY THE THE CITY OF JACKSONVILLE TRAFFIC ENGINEERING DIVISION AND/OR FDOT FOR WORK IN FDOT RIGHTS OF WAY. ALTERNATE TRAFFIC CONTROL PLANS SHALL BE SIGNED AND SEALED BY A PROFESSIONAL ENGINEER REGISTERED IN THE STATE OF FLORIDA AND SHALL BE CONSISTENT WITH STANDARD TTC DESIGN PRACTICES. NO CONSTRUCTION ACTIVITY WILL BE ALLOWED UNTIL THE CONTRACTOR'S TTC PLANS ARE APPROVED IN WRITING.
7. ACCESS TO PROPERTIES WITHIN THE PROJECT LIMITS SHALL BE PROVIDED AT ALL TIMES UNLESS OTHERWISE STATED.
8. RESIDENTIAL DRIVEWAY RECONSTRUCTION SHALL BE COORDINATED WITH THE ENGINEER AND THE PROPERTY OWNERS.

TEMPORARY TRAFFIC CONTROL SIGNING NOTES

1. THE CONTRACTOR SHALL INSURE THAT PERMANENT SIGNS DO NOT CONFLICT WITH TTC SIGNS. THE CONTRACTOR SHALL COVER ALL SIGNS, BOTH PERMANENT AND TEMPORARY, THAT CONFLICT WITH TRAFFIC CONTROL DURING CONSTRUCTION OPERATIONS.
2. THE EXISTING POSTED SPEED LIMIT SIGNS SHALL REMAIN THROUGHOUT ALL PHASES UNLESS OTHERWISE NOTED. THE CONTRACTOR MAY ADD ORANGE AND BLACK ADVISORY SPEED PLATES TO EXISTING SPEED LIMIT SIGNS.
3. ANY EXISTING STREET AND ROAD NAME SIGNS THAT ARE IMPACTED BY CONSTRUCTION SHALL BE TEMPORARILY RELOCATED AND KEPT VISIBLE AT ALL TIMES FOR THE FACILITATION OF ACCESS BY EMERGENCY VEHICLE TRAFFIC.
4. CONTRACTOR MUST MAINTAIN EXISTING SIGNING. IF SIGNS ARE DAMAGED DUE TO HIS ACTIVITY, THE CONTRACTOR IS REQUIRED TO REPLACE THEM IN ACCORDANCE WITH CURRENT CITY STANDARD SPECIFICATIONS AT NO ADDITIONAL COST TO JEA.

TTC LEGEND

- WORK AREA
- CHANNELIZING DEVICE (DRUM, WITH WARNING LIGHT)
- TYPE III BARRICADE
- SIGN WITH 18"x18" (MIN.)
- PCMS — PORTABLE CHANGEABLE (VARIABLE) MESSAGE SIGN (PCMS)
- ADVANCE WARNING ARROW PANEL
- WORK ZONE SIGN
- FLAGGER

JonesEdmunds
CERTIFICATE OF AUTHORIZATION #1841
738 NE WALDO ROAD, GAINESVILLE, FL 32641-1523; 377-5821
8657 BAYPINE ROAD SUITE 300, JACKSONVILLE, FL 32256/(904) 744-1401

NO.	BY	DATE	REVISIONS
6.			
5.			
4.			
3.			
2.			
1.			

C&ES
Construction & Engineering Services Consultants, Inc.
9432 Baymeadows Road, Suite 100
Jacksonville, FL 32256
Tel: (904) 652-1186
Business Number CA 27598

DESIGNER:	CJMA
DRAWN BY:	KLB
DATE:	MARCH 30, 2020
CHECKED BY:	FEG
DATE:	MARCH 30, 2020

DESIGN ENGINEER: CLARO NACU MAGPANTAY
FLORIDA REGISTRATION NO. 60164

JEA Building Community sm

BOULEVARD FORCE MAIN AND WATER MAIN REPLACEMENT
TTC NOTES AND LEGEND

PROJ. NO. –
DATE: MARCH 30, 2020
SCALE: NONE

NO. SHEETS 35
SHEET NO. 24
DRAWING NO. TTC-1

Z:\Projects\19002 JEA Boulevard Street FM Upgrade\dwg\TTC_NOTES_DETAILS.dwg Current Layout Tab = TTC-1 Mon Mar 30, 2020 - 06:52

SIDEWALK DETOUR SHALL BE IN ACCORDANCE W/FDOT INDEX NO. 102-660

TTC FOR WORK IN THIS AREA SHALL BE DONE ON THE WEEKEND IN ACCORDANCE WITH FDOT INDEX No. 102-621 w/ CHANNELIZING DEVICES

WORK ZONE 1

WORK ZONE 2
TTC FOR WORK IN THIS AREA SHALL BE DONE IN ACCORDANCE WITH FDOT INDEX No. 102-621 w/ CHANNELIZING DEVICES AND IN CONJUNCTION WITH THE DETOUR PLAN BELOW

WORK ZONE 3
TTC FOR WORK IN THIS AREA SHALL BE DONE IN ACCORDANCE WITH FDOT INDEX No. 102-621 w/ CHANNELIZING DEVICES

WORK ZONE 4
TTC FOR WORK IN THIS AREA SHALL BE IN ACCORDANCE w/ FDOT INDEX No. 102-621 FOR BOULEVARD STREET AND MUTCD 6H-27 FOR THE INTERSECTING STREETS w/ CHANNELIZING DEVICES

WORK ZONE 5
TTC FOR WORK IN THIS AREA SHALL BE DONE ON THE WEEKEND IN COORDINATION WITH PROPERTY OWNER

WORK ZONE 6
TTC FOR WORK IN THIS AREA SHALL BE DONE IN ACCORDANCE WITH FDOT INDEX No. 102-621 w/ CHANNELIZING DEVICES

WORK ZONE 7
TTC FOR WORK IN THIS AREA SHALL BE IN ACCORDANCE w/ FDOT INDEX No. 102-621 FOR BOULEVARD STREET AND MUTCD 6H-27 FOR THE INTERSECTING STREETS w/ CHANNELIZING DEVICES

ONLY CLOSE ONE DRIVEWAY AT A TIME

BOULEVARD STREET

7TH STREET

8TH STREET

MATCH LINE 16+60

SCALE: 1" = 20'

LEGEND

DETOUR ROUTE

(A)	(B)	(C)	(D)	(E)
END DETOUR	DETOUR	DETOUR	DETOUR AHEAD	ROAD CLOSED AHEAD
M4-8A	M4-9R B/O	M4-9L B/O	W20-2A	W20-3



WORK ZONE 2 - DETOUR

N.T.S.

JonesEdmunds
CERTIFICATE OF AUTHORIZATION #1841
730 NE WALDO ROAD, GAINESVILLE, FL 32641-1352 / 377-5821
8657 BAYPINE ROAD SUITE 300, JACKSONVILLE, FL 32256 / (904) 744-1401

Construction & Engineering Services Consultants, Inc.
9432 Baymeadows Road, Suite 100
Jacksonville, FL 32256
Tel: (904) 652-1186
Business Number CA 27598

NO.	BY	DATE	REVISIONS
6.			
5.			
4.			
3.			
2.			
1.			

DESIGNER:	CDM	DESIGN ENGINEER:	CLARO NACU MAGPANTAY
DRAWN BY:	KLB		
DATE:	MARCH 30, 2020		
CHECKED BY:	FEG	FLORIDA REGISTRATION NO.	60164
DATE:	MARCH 30, 2020		

JEA Building Community sm

BOULEVARD FORCE MAIN AND WATER MAIN REPLACEMENT
TEMPORARY TRAFFIC CONTROL PLAN

NO. SHEETS	35
SHEET NO.	25
DRAWING NO.	TTC-2
PROJ. NO.	–
DATE:	MARCH 30, 2020
SCALE:	AS NOTED

Z:\Projects\19002 JEA Boulevard Street FM Upgrade\dwg\JEA Boulevard TTC plans.dwg Current Layout Tab = TTC-2 Fri Mar 27, 2020 – 16:24

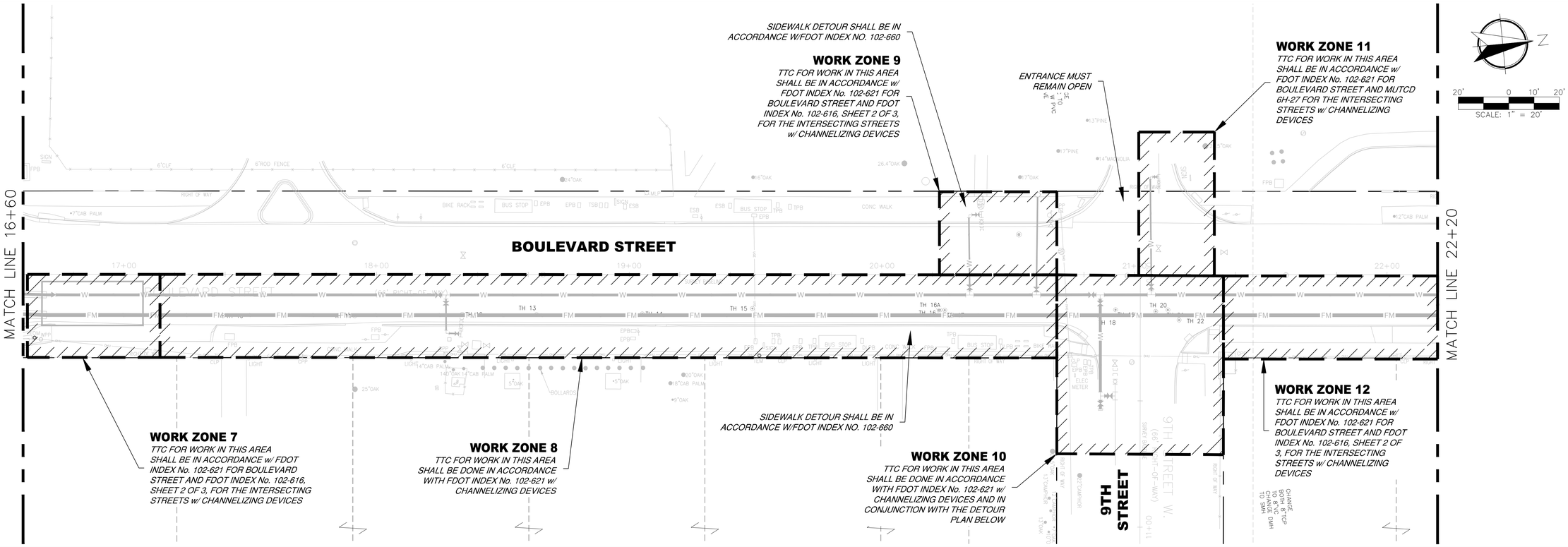

LEGEND

DETOUR ROUTE

A	B	C	D	E
END DETOUR	DETOUR →	DETOUR ←	DETOUR AHEAD	ROAD CLOSED AHEAD
M4-8A	M4-9R B/O	M4-9L B/O	W20-2A	W20-3

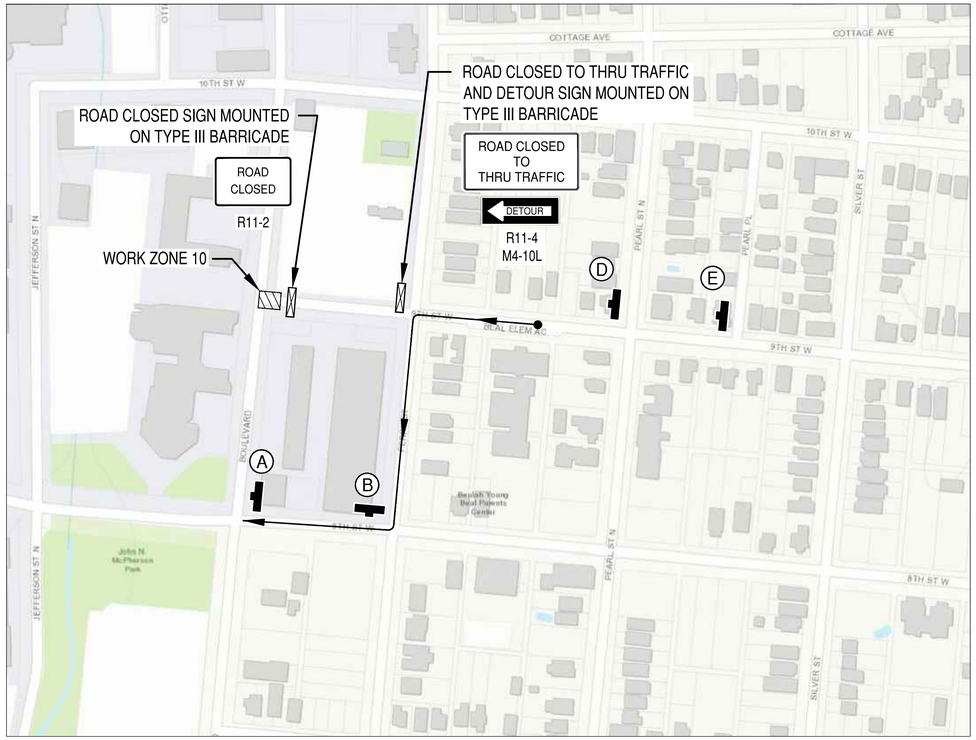

WORK ZONE 10 - DETOUR

N

N.T.S.

JonesEdmunds
CERTIFICATE OF AUTHORIZATION #1841
730 NE WALDO ROAD, GAINESVILLE, FL 32641-1352 / 377-5821
8657 BAYPINE ROAD SUITE 300, JACKSONVILLE, FL 32256 / (904) 744-1401

NO.	BY	DATE	REVISIONS
6.			
5.			
4.			
3.			
2.			
1.			

C&ES
Construction & Engineering Services Consultants, Inc.
9432 Baymeadows Road, Suite 100
Jacksonville, FL 32256
Tel: (904) 652-1186
Business Number CA 27598

DESIGNER:	CNM
DRAWN BY:	KLB
DATE:	MARCH 30, 2020
CHECKED BY:	FEG
DATE:	MARCH 30, 2020

DESIGN ENGINEER: CLARO NACU MAGPANTAY
FLORIDA REGISTRATION NO. 60164

JEA Building Community sm

BOULEVARD FORCE MAIN AND WATER MAIN REPLACEMENT
TEMPORARY TRAFFIC CONTROL PLAN

PROJ. NO.	–
DATE:	MARCH 30, 2020
SCALE:	AS NOTED
NO. SHEETS	35
SHEET NO.	28
DRAWING NO.	TTC-3

Z:\Projects\19002 JEA Boulevard Street FM Upgrade\dwg\JEA Boulevard TTC plans.dwg Current Layout Tab = TTC-3 Mon Mar 30, 2020 - 06:46

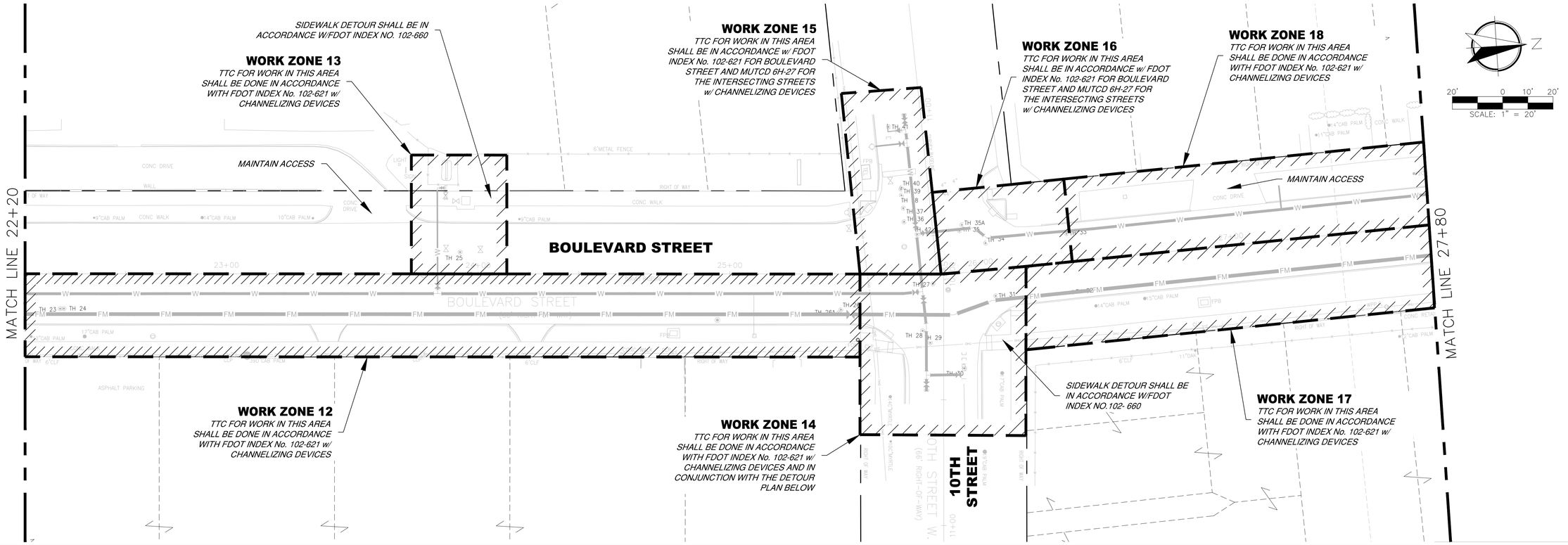

LEGEND

DETOUR ROUTE

A	B	C	D	E
END DETOUR	DETOUR	DETOUR	DETOUR AHEAD	ROAD CLOSED AHEAD
M4-8A	M4-9R B/O	M4-9L B/O	W20-2A	W20-3

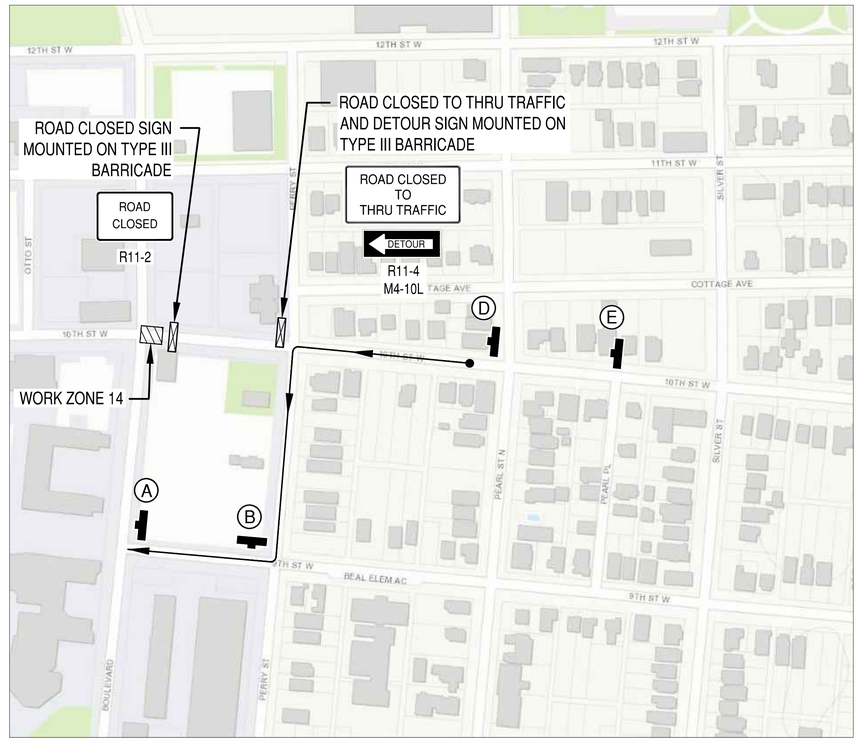

WORK ZONE 14 - DETOUR

JonesEdmunds
CERTIFICATE OF AUTHORIZATION #1841
730 NE WALDO ROAD, SUITE 600, GAINESVILLE, FL 32641-1352 / 352.377.5821
8657 BAYPINE ROAD SUITE 300, JACKSONVILLE, FL 32256 / (904) 744-1401

NO.	BY	DATE	REVISIONS
6.			
5.			
4.			
3.			
2.			
1.			

Construction & Engineering Services Consultants, Inc.
9432 Baymeadows Road, Suite 100
Jacksonville, FL 32256
Tel: (904) 652-1186
Business Number CA 27598

DESIGNER:	CNM
DRAWN BY:	KLB
DATE:	MARCH 30, 2020
CHECKED BY:	FEG
DATE:	MARCH 30, 2020
DESIGN ENGINEER:	CLARO NACU MAGPANTAY
FLORIDA REGISTRATION NO.	60164

JEA Building Community sm

BOULEVARD FORCE MAIN AND WATER MAIN REPLACEMENT
TEMPORARY TRAFFIC CONTOL PLAN

PROJ. NO.	–
DATE:	MARCH 30, 2020
SCALE:	AS NOTED
NO. SHEETS	35
SHEET NO.	27
DRAWING NO.	TTC-4

Z:\Projects\19002 JEA Boulevard Street FM Upgrade\dwg\JEA Boulevard TTC plans.dwg Current Layout Tab = TTC-4 Mon Mar 30, 2020 - 06:47

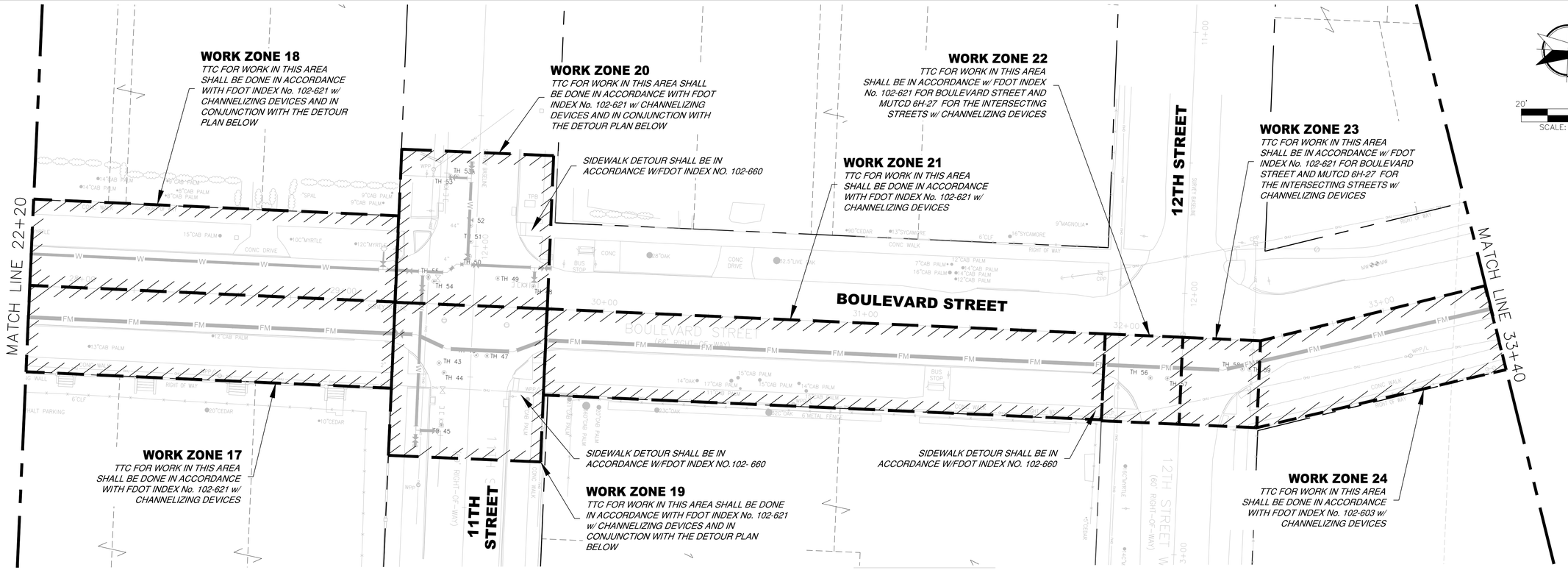

LEGEND

DETOUR ROUTE

A	B	C
END DETOUR	DETOUR	DETOUR
M4-8A	M4-9R B/O	M4-9L B/O
D	E	
DETOUR AHEAD	ROAD CLOSED AHEAD	
W20-2A	W20-3	

N

N.T.S.

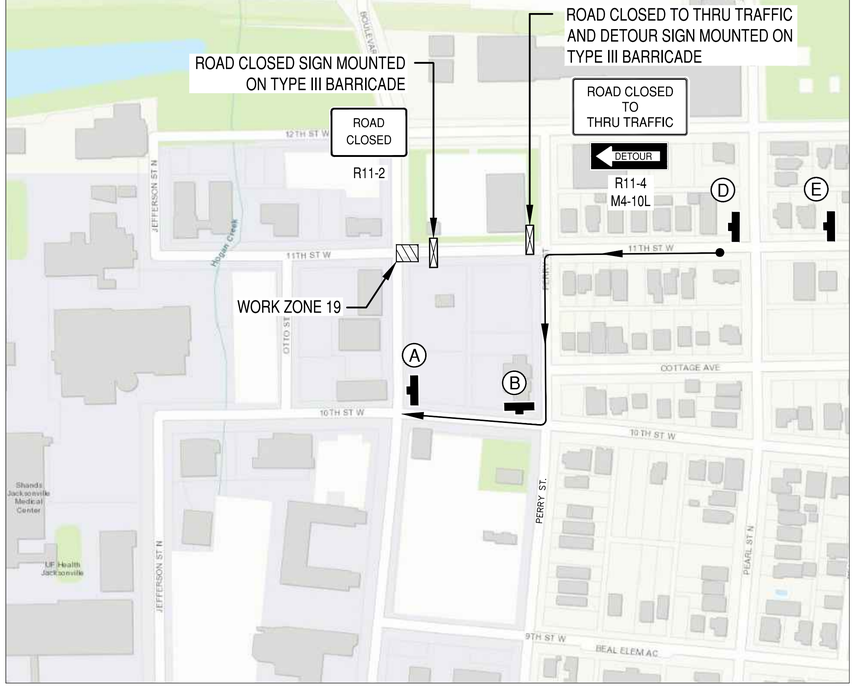

WORK ZONE 19 - DETOUR

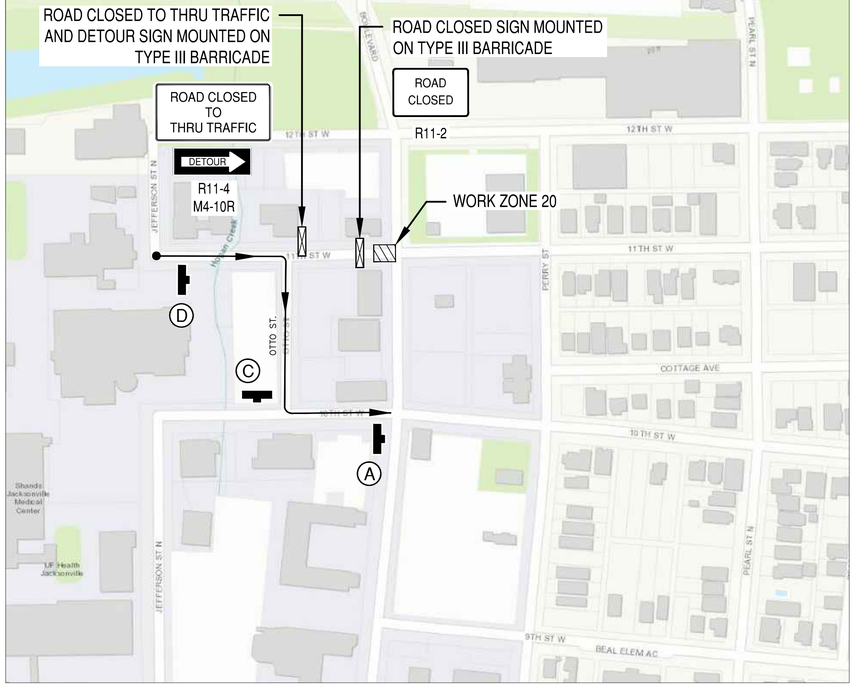

WORK ZONE 20 - DETOUR

JonesEdmunds
CERTIFICATE OF AUTHORIZATION #1841
730 NE WALDO ROAD, GAINESVILLE, FL 32641 / (352) 377-5821
8657 BAYPINE ROAD SUITE 300, JACKSONVILLE, FL 32256 / (904) 744-1401

NO.	BY	DATE	REVISIONS
6.			
5.			
4.			
3.			
2.			
1.			

Construction & Engineering Services Consultants, Inc.
9432 Baymeadows Road, Suite 100
Jacksonville, FL 32256
Tel: (904) 652-1186
Business Number CA 27598

C&ES

DESIGNER:	CDM
DRAWN BY:	KLB
DATE:	MARCH 30, 2020
CHECKED BY:	FEG
DATE:	MARCH 30, 2020

DESIGN ENGINEER: CLARO NACU MAGPANTAY
FLORIDA REGISTRATION NO. 60164

JEA Building Community.com

BOULEVARD FORCE MAIN AND WATER MAIN REPLACEMENT
TEMPORARY TRAFFIC CONTROL PLAN

PROJ. NO.	–
DATE:	MARCH 30, 2020
SCALE:	AS NOTED
NO. SHEETS	35
SHEET NO.	28
DRAWING NO.	TTC-5

Z:\Projects\19002 JEA Boulevard Street FM Upgrade\dwg\JEA Boulevard TTC plans.dwg Current Layout Tab = TTC-5 Mon Mar 30, 2020 - 06:48

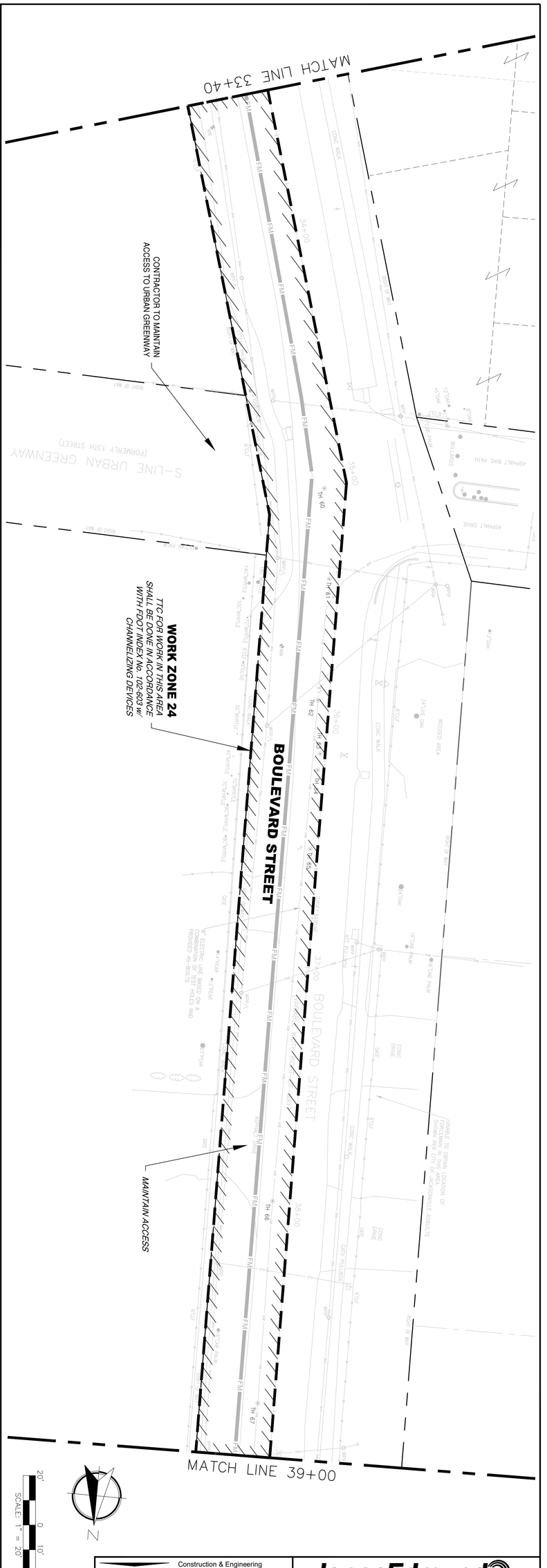

NO. SHEETS 35	PROJ. NO. --	BOULEVARD FORCE MAIN AND WATER MAIN REPLACEMENT TEMPORARY TRAFFIC CONTROL PLAN	JEA Building Community sm
SHEET NO. 29	DATE: MARCH 30, 2020		
DRAWING NO. TTC - 6	SCALE: AS NOTED		

DESIGNER:	CNM	DESIGN ENGINEER	
DRAWN BY:	KLB	CLARO NACU MAGPANTAY	
DATE:	MARCH 30, 2020	FLORIDA REGISTRATION NO.	
CHECKED BY:	FEG	60164	
DATE:	MARCH 30, 2020		

C&ES Construction & Engineering Services Consultants, Inc.
9432 Baymeadows Road, Suite 100
Jacksonville, FL 32256
Tel: (904) 652-1186
Business Number CA 27598

JonesEdmunds
CERTIFICATE OF AUTHORIZATION #1841
730 NE WALDO ROAD, GAINESVILLE, FLORIDA 32641 / (352) 377-5821
8657 BAYPINE ROAD SUITE 300, JACKSONVILLE, FL 32256 / (904) 744-5401

NO.	BY	DATE	REVISIONS
6.			
5.			
4.			
3.			
2.			
1.			

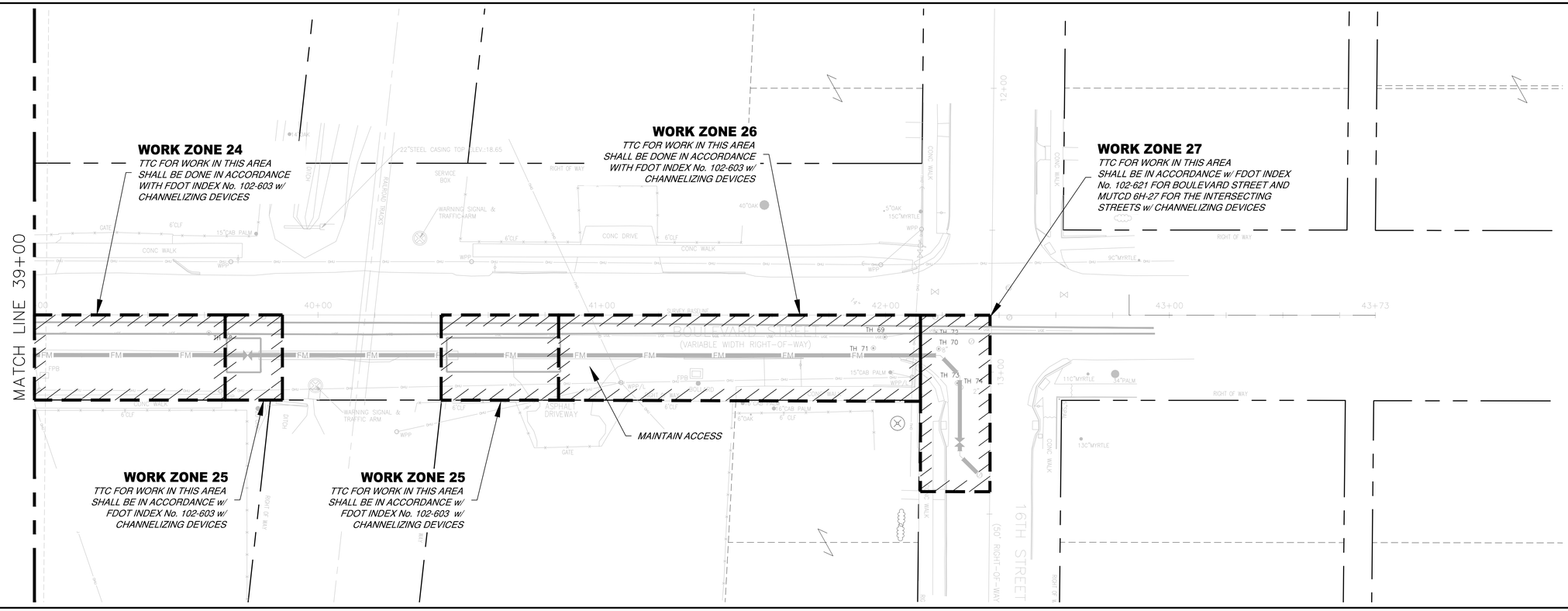

JonesEdmunds
CERTIFICATE OF AUTHORIZATION #1841
730 NE WALDO ROAD, GAINESVILLE, FL 32641-1352, 377-5821
8657 BAYPINE ROAD SUITE 300, JACKSONVILLE, FL 32256/ (904) 744-1401

NO.	BY	DATE	REVISIONS
6.			
5.			
4.			
3.			
2.			
1.			

Construction & Engineering Services Consultants, Inc.
9432 Baymeadows Road, Suite 100
Jacksonville, FL 32256
Tel: (904) 652-1186
Business Number CA 27598

DESIGNER:	CNM
DRAWN BY:	KLB
DATE:	MARCH 30, 2020
CHECKED BY:	FEG
DATE:	MARCH 30, 2020

DESIGN ENGINEER: CLARO NACU MAGPANTAY
FLORIDA REGISTRATION NO. 60164

JEA Building Community sm

NO. SHEETS 35
SHEET NO. 30
DRAWING NO. TTC -7

PROJ. NO. -
DATE: MARCH 30, 2020
SCALE: AS NOTED

BOULEVARD FORCE MAIN AND WATER MAIN REPLACEMENT
TEMPORARY TRAFFIC CONTROL PLAN

Z:\Projects\19002 JEA Boulevard Street FM Upgrade\dwg\JEA Boulevard TTC plans.dwg Current Layout Tab = TTC - 7 Mon Mar 30, 2020 - 06:50

SYMBOLS:

- Work Area
- Channelizing Device (See Index 102-600)
- Work Zone Sign
- Flagger
- Lane Identification + Direction of Traffic

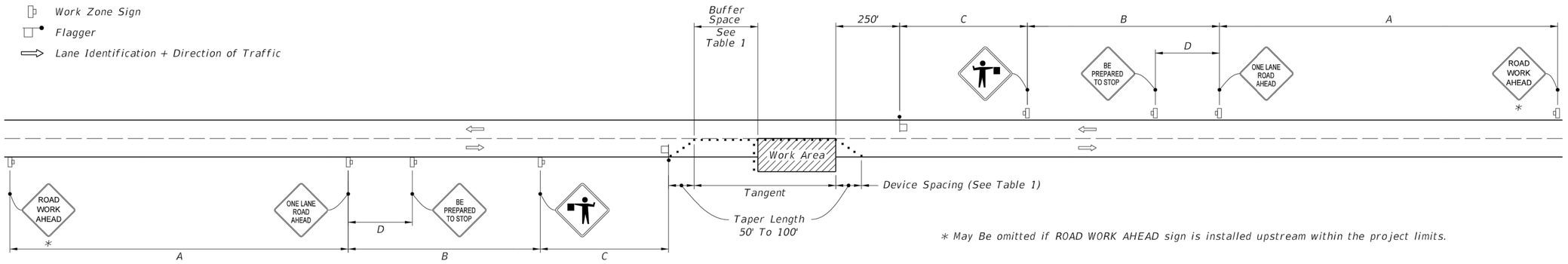

* May Be omitted if ROAD WORK AHEAD sign is installed upstream within the project limits.

WITHOUT TEMPORARY RAISED RUMBLE STRIPS

GENERAL NOTES:

1. Special Conditions may be required in accordance with these notes and the following sheets:

   A. Railroad Crossings:
      a. If an active railroad crossing is located closer to the Work Area than the queue length plus 300 feet, extend the Buffer Space as shown on Sheet 3.
      b. If the queuing of vehicles across an active railroad crossing cannot be avoided, provide a uniformed traffic control officer or flagger at the highway-rail grade crossing to prevent vehicles from stopping within the highway-rail grade crossing, even if automatic train warning devices are in place.
   B. If the Work Area encroaches on the Centerline, use the Layout for Temporary Lane Shift to Shoulder on Sheet 3 only if the Existing Paved Shoulder width is sufficient to provide for an 11' lane between the Work Area and the Edge of Existing Paved Shoulder. Reduce the posted speed when appropriate.

2. Temporary Raised Rumble Strips:

   A. Use when both of the following conditions are met concurrently:
      a. Existing Posted Speed is 55 mph or greater;
      b. Work duration is greater than 60 minutes.
   B. Use a consistent Strip color throughout the work zone.
   C. Place each Rumble Strip Set transversely across the lane at locations shown.
   D. Use Option 1 or Option 2 as shown on Sheet 2. Use only one option throughout work zone.

3. Additional one-way control may be provided by the following means:
   A. Flag-carrying vehicle;
   B. Official vehicle;
   C. Pilot vehicles;
   D. Traffic signals.

   When flaggers are the sole means of one-way control, the flaggers must be in sight of each other or in direct communication at all times.

4. When a side road intersects the highway within the TTC zone, place additional TTC devices in accordance with other applicable TCZ Indexes.

5. The two channelizing devices directly in front of the work area may be omitted provided vehicles in the work area have high-intensity rotating, flashing, oscillating, or strobe lights operating.

6. When Buffer Space cannot be attained due to geometric constraints, use the greatest attainable length, not less than 200 ft, for posted speeds greater than 25 mph.

7. ROAD WORK AHEAD and the BE PREPARED TO STOP signs may be omitted if all of the following conditions are met:

   A. Work operations are 60 minutes or less.
   B. Speed limit is 45 mph or less.
   C. There are no sight obstructions to vehicles approaching the work area for a distance equal to the Buffer Space shown in Table 1.
   D. Vehicles in the work area have high-intensity, rotating, flashing, oscillating, or strobe lights operating.
   E. Volume and complexity of the roadway has been considered.
   F. If a railroad crossing is present, vehicles will not queue across rail tracks.
   G. AFADs are not in use.

8. See Index 102-600 for general TCZ requirements and additional information.

9. Automated Flagger Assistance Devices (AFADs) may be used in accordance with Specifications Section 102, 990 and the APL vendor drawings.

TABLE 1

Posted Speed	DEVICE SPACING: Maximum Spacing of Cones or Tubular Markers		DEVICE SPACING: Maximum Spacing of Type I or Type II Barricades/Panels/Drums		Distance Between Signs				Buffer Space
	On a Taper	On a Tangent	On a Taper	On a Tangent	A	B	C	D	
25	20'	50'	20'	50'	200'	200'	200'	100'	155'
30	20'	50'	20'	50'	200'	200'	200'	100'	200'
35	20'	50'	20'	50'	200'	200'	200'	100'	250'
40	20'	50'	20'	50'	200'	200'	200'	100'	305'
45	20'	50'	20'	50'	350'	350'	350'	175'	360'
50	20'	50'	20'	100'	500'	500'	500'	250'	425'
55	20'	50'	20'	100'	2640'	1500'	1000'	500'	495'
60	20'	50'	20'	100'	2640'	1500'	1000'	500'	570'
65	20'	50'	20'	100'	2640'	1500'	1000'	500'	645'
70	20'	50'	20'	100'	2640'	1500'	1000'	500'	730'

CONDITIONS

WHERE ANY VEHICLE, EQUIPMENT, WORKERS OR THEIR ACTIVITIES ENCROACH THE AREA BETWEEN THE CENTERLINE AND A LINE 2' OUTSIDE THE EDGE OF TRAVEL WAY.

LAST REVISION	REVISION	DESCRIPTION:	FDOT	FY 2019-20 STANDARD PLANS	TWO-LANE, TWO-WAY, WORK WITHIN THE TRAVEL WAY	INDEX	SHEET
11/01/17						102-603	1 of 3

JonesEdmunds
730 NE WALDO ROAD, GAINESVILLE, FL 32641 / (352) 377-5821
8657 BAYPINE ROAD SUITE 300, JACKSONVILLE, FL 32256 / (904) 744-5401
CERTIFICATE OF AUTHORIZATION #1841

NO.	BY	DATE	REVISIONS
6.			
5.			
4.			
3.			
2.			
1.			

C&ES
Construction & Engineering Services Consultants, Inc.
9432 Baymeadows Road, Suite 100
Jacksonville, FL 32256
Tel: (904) 652-1186
Business Number CA 27598

DESIGNER:	CNM
DRAWN BY:	KLB
DATE:	MARCH 30, 2020
CHECKED BY:	FEG
DATE:	MARCH 30, 2020

DESIGN ENGINEER: CLARO NACU MAGPANTAY
FLORIDA REGISTRATION NO. 60164

JEA Building Community sm

BOULEVARD FORCE MAIN AND WATER MAIN REPLACEMENT
TTC DETAILS - FDOT INDEX 102 - 605

PROJ. NO. --
DATE: MARCH 30, 2020
SCALE: NONE

NO. SHEETS 35
SHEET NO. 31
DRAWING NO. TTC-9

Z:\Projects\19002 JEA Boulevard Street FM Upgrade\dwg\TTC_NOTES_DETAILS.dwg Current Layout Tab = TTC-8 Mon Mar 30, 2020 - 06:53
9/18/2018 10:24:22 AM

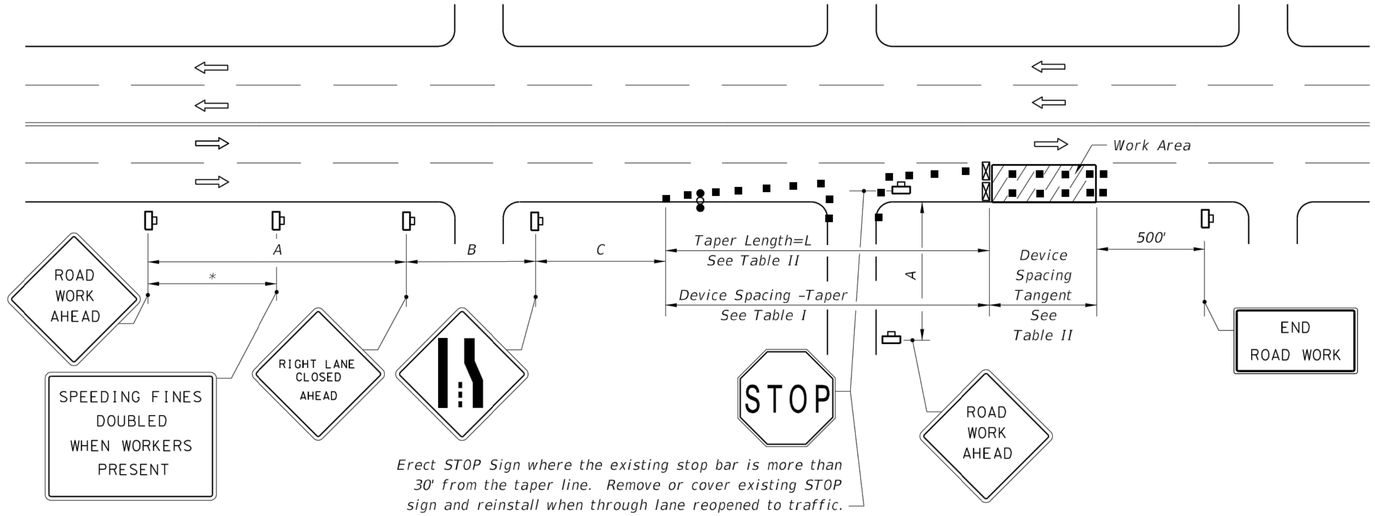

Erect STOP Sign where the existing stop bar is more than 30' from the taper line. Remove or cover existing STOP sign and reinstall when through lane reopened to traffic.

RIGHT LANE CLOSED ON FAR SIDE OF MINOR SIDESTREET

DISTANCE BETWEEN SIGNS			
Speed	Spacing (ft.)		
	A	B	C
40 mph or less	200	200	200
45 mph	350	350	350

* 500' beyond the ROAD WORK AHEAD sign or midway between signs whichever is less.

Table I Device Spacing				
Speed (mph)	Max. Distance Between Devices (ft.)			
	Cones or Tubular Markers		Type I or Type II Barricades or Vertical Panels or Drums	
	Taper	Tangent	Taper	Tangent
25	25	50	25	50
30 to 45	25	50	30	50

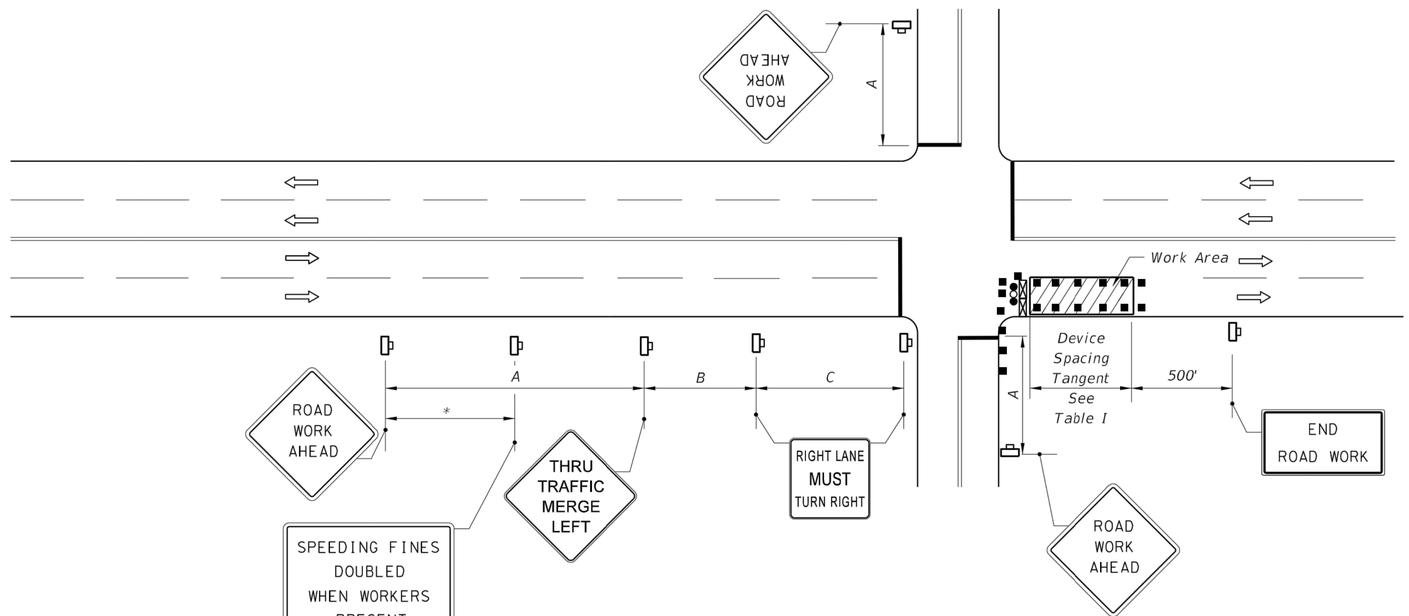

RIGHT LANE CLOSED ON FAR SIDE OF INTERSECTION WITH SIGNIFICANT RIGHT TURNING MOVEMENTS

Table II Taper Length - Merge (12' Lateral Transition)		
Speed (mph)	L (ft)	Notes (Merge)
25	125	$L = \frac{WS^2}{60}$
30	180	
35	245	
40	320	
45	540	L=WS

For lateral transitions other than 12', use formula for L shown in the notes column. Where:
L = Length of taper in feet
W = Width of lateral transition in feet
S = Posted speed limit (mph)

1. The normal procedure is to close on the near side of the intersection any lane that is not carried through the intersection. However, when this results in the closure of a right lane having significant right turning movements, then the right lane may be restricted to right turns only as shown in this detail.
2. For intersection approaches reduced to a single lane, left turning movements may be prohibited to maintain capacity for through vehicular traffic.

LAST REVISION	REVISION	DESCRIPTION:	FDOT	FY 2019-20 STANDARD PLANS	MULTILANE, WORK NEAR INTERSECTION MEDIAN OR OUTSIDE LANE	INDEX	SHEET
11/01/17						102-616	2 of 3

JonesEdmunds
CERTIFICATE OF AUTHORIZATION #1841
730 NE WALDO ROAD, GAINESVILLE, FLORIDA 32641 / (352) 377-5821
8657 BAYPINE ROAD SUITE 300, JACKSONVILLE, FL 32256 / (904) 744-5401

NO.	BY	DATE	REVISIONS
6.			
5.			
4.			
3.			
2.			
1.			

C&ES
Construction & Engineering Services Consultants, Inc.
9432 Baymeadows Road, Suite 100
Jacksonville, FL 32256
Tel: (904) 652-1186
Business Number CA 27598

DESIGNER: CNM
DRAWN BY: KLB
DATE: MARCH 30, 2020
CHECKED BY: FEG
DATE: MARCH 30, 2020

DESIGN ENGINEER: CLARO NACU MAGPANTAY
FLORIDA REGISTRATION NO. 60164

JEA Building Community

BOULEVARD FORCE MAIN AND WATER MAIN REPLACEMENT
TTC DETAILS - FDOT INDEX 102 - 616

PROJ. NO. --
DATE: MARCH 30, 2020
SCALE: NONE

NO. SHEETS 35
SHEET NO. 32
DRAWING NO. TTC-9

Z:\Projects\19002 JEA Boulevard Street FM Upgrade\dwg\TTC_NOTES_DETAILS.dwg Current Layout Tab = TTC-9 Mon Mar 30, 2020 - 06:54
9/18/2018 10:36:27 AM

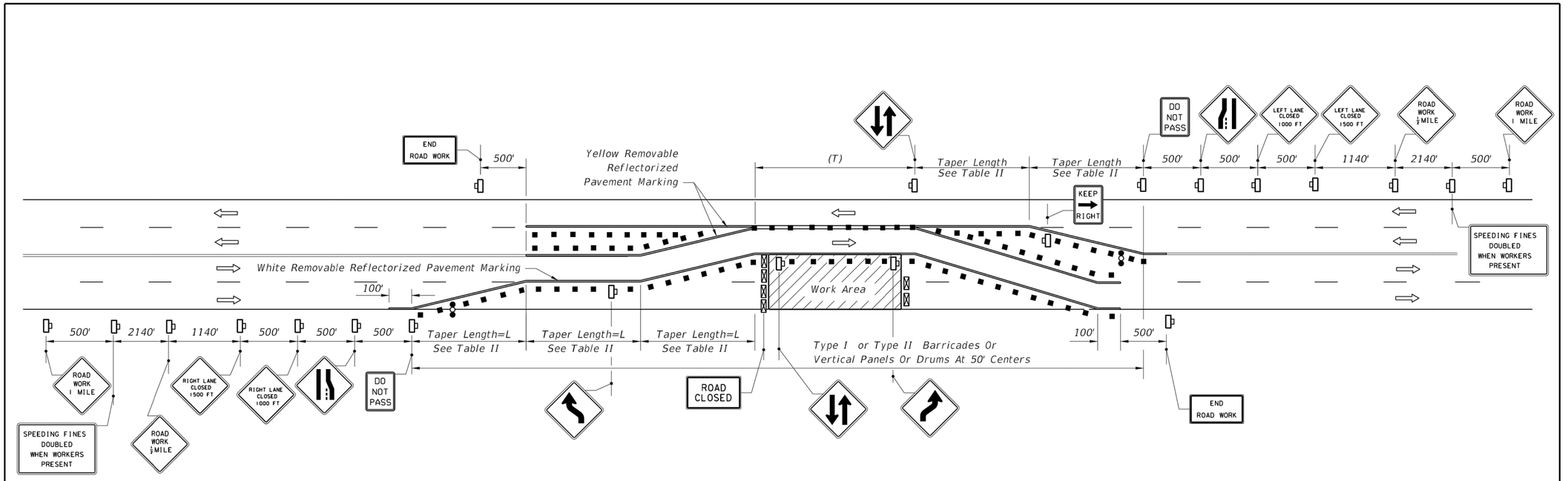

SYMBOLS

- Work Area
- Channelizing Device (See Index 102-600)
- Type III Barricade
- Work Zone Sign
- Advance Warning Arrow Board
- Lane Identification + Direction of Traffic

GENERAL NOTES

1. TWO-WAY TRAFFIC signs shall be repeated every ¼ mile in each direction, through the tangent distance (T).
2. When paved shoulders having a width of 8 ft. or more are closed, channelizing devices shall be used to close the shoulder in advance of the merging taper to direct vehicular traffic to remain within the travel way. See Index 102-612 for shoulder taper formulas.
3. Where the tangent distance (T) exceeds 250', spacing between cones or tubular markers may be increased to 50' or spacing between Type I or Type II barricades or vertical panels or drums may be increased to 100' within the limits of the tangent.
4. This index does not apply when work is being performed in the middle lane(s) of a six or more lane highway. Special maintenance of traffic details will be required.
5. When a side road intersects the highway within the TTC zone, additional TTC devices shall be placed in accordance with other applicable TCZ Indexes.
6. For general TCZ requirements and additional information, refer to Index 102-600.

Table II
Taper Length - Merge (12' Lateral Transition)

Speed (mph)	L (ft.)	Notes (Merge)
25	125	$L=\frac{WS^2}{60}$
30	180	
35	245	
40	320	
45	540	L=WS
50	600	
55	660	
60	720	
65	780	
70	840	

For lateral transitions other than 12' use formula for L shown in the notes column.
Where:
L = Length of taper in feet
W = Width of lateral transition in feet
S = Posted speed limit (mph)

CONDITIONS

WHERE ANY VEHICLE, EQUIPMENT, WORKERS OR THEIR ACTIVITIES REQUIRE THE CLOSURE OF THE LANES IN ONE DIRECTION AND A DIVERSION IS PROVIDED BY UTILIZING ONE LANE OF THE OPPOSING TRAFFIC LANES.

LAST REVISION	REVISION	DESCRIPTION:
11/01/17		

FDOT FY 2019-20 STANDARD PLANS

MULTILANE, UNDIVIDED TEMPORARY DIVERSION CONNECTION

INDEX 102-621 | SHEET 1 of 1

JonesEdmunds
CERTIFICATE OF AUTHORIZATION #1841
730 NE WALDO ROAD, SUITE 600, GAINESVILLE, FL 32641 / (352) 377-5821
8657 BAYPINE ROAD SUITE 300, JACKSONVILLE, FL 32256 / (904) 744-1401

NO.	BY	DATE	REVISIONS
6.			
5.			
4.			
3.			
2.			
1.			

Construction & Engineering Services Consultants, Inc.
9432 Baymeadows Road, Suite 100
Jacksonville, FL 32256
Tel: (904) 652-1186
Business Number CA 27598

DESIGNER: CNM
DRAWN BY: KLB
DATE: MARCH 30, 2020
CHECKED BY: FEG
DATE: MARCH 30, 2020

DESIGN ENGINEER: CLARO NACU MAGPANTAY
FLORIDA REGISTRATION NO. 60164

JEA Building Community sm

BOULEVARD FORCE MAIN AND WATER MAIN REPLACEMENT
TTC DETAILS - FDOT INDEX 102 - 621

PROJ. NO. --
DATE: MARCH 30, 2020
SCALE: NONE

NO. SHEETS 35
SHEET NO. 33
DRAWING NO. TTC-10

9/18/2018 10:39:57 AM
Z:\Projects\19002 JEA Boulevard Street FM Upgrade\dwg\TTC_NOTES_DETAILS.dwg Current Layout Tab = TTC-10 Mon Mar 30, 2020 - 06:55

SYMBOLS

- Work Area
- Channelizing Device
- Work Zone Sign
- CR — Required Locations For Either Temporary Or Permanent Curb Ramps.
- Lane Identification + Direction of Traffic
- Pedestrian Longitudinal Channelizing Device (LCD) with Mounted Work Zone Sign or separate Work Zone Sign
- Pedestrian Longitudinal Channelizing Device (LCD)
- Temporary Sidewalk

GENERAL NOTES:

1. When encroaching work requires a sidewalk closure for 60 minutes or greater, provide an alternate pedestrian route.
2. For spacing of vehicular Channelizing Devices, see applicable vehicular temporary traffic control Indexes.
3. Cover or deactivate pedestrian traffic signal display(s) controlling closed crosswalks.
4. For post mounted signs located near or adjacent to a sidewalk, maintain a minimum 7' clearance from the bottom of the sign panel to the surface of the sidewalk.
5. Provide a 5' wide temporary walkway, except where space restrictions warrant a minimum width of 4'. Provide a 5' x 5' passing space for temporary walkways less than 5' in width at intervals not to exceed 200'.
6. Provide a cross-slope with a maximum value of 0.02 for all temporary walkways.
7. Maintain temporary walkway surfaces and ramps that are stable, firm, slip-resistant, and free of any obstructions or hazards such as holes, debris, mud, construction equipment, and stored material.
8. Remove temporary walkways immediately after reopening of the sidewalk, unless otherwise noted in the plans.
9. Meet the requirements of Index 522-002 for temporary curb ramps.
10. Place pedestrian longitudinal channelizing device(s) across the full width of the closed sidewalk. For temporary walkways, similar to the Sidewalk Diversion, place LCDs to delineate both sides of the temporary walkway.
11. For sidewalk diversions, ensure that there is sufficient R/W for placement of temporary sidewalk and pedestrian longitudinal channelizing devices.

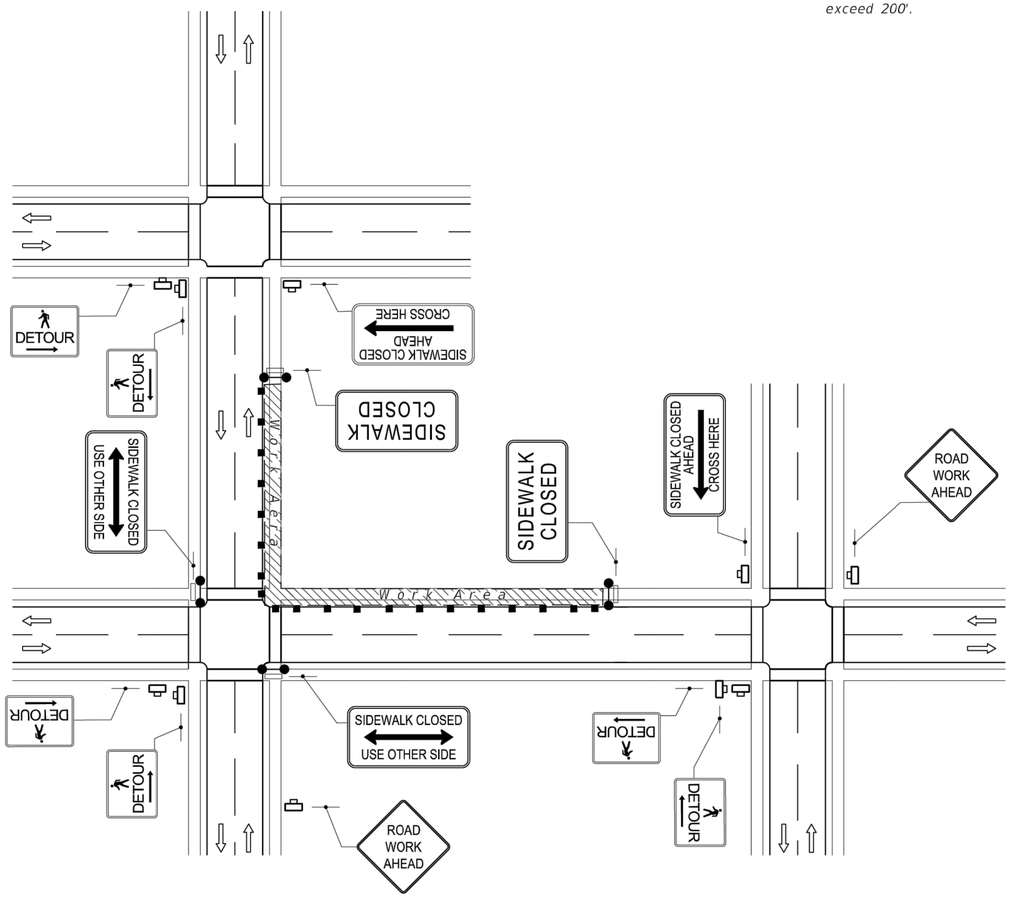

CROSSWALK CLOSURE AND PEDESTRIAN DETOUR

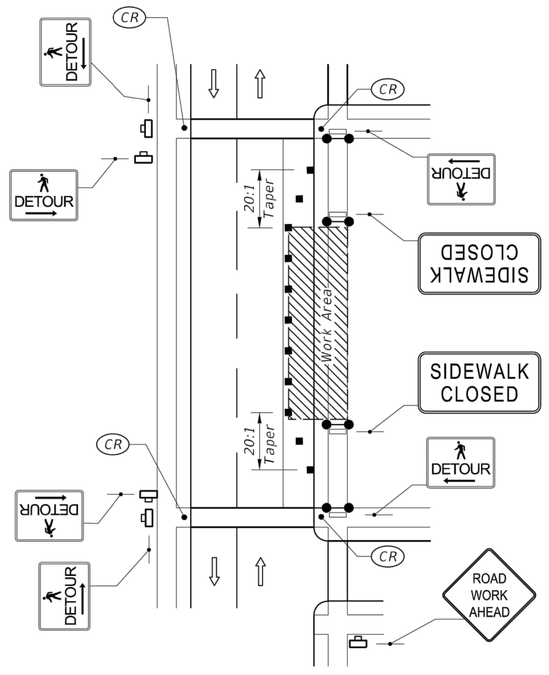

SIDEWALK DETOUR

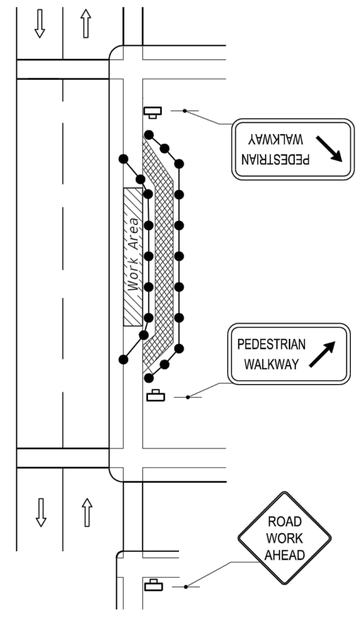

SIDEWALK DIVERSION

LAST REVISION	REVISION	DESCRIPTION:
11/01/17		

FDOT FY 2019-20 STANDARD PLANS

PEDESTRIAN CONTROL FOR CLOSURE OF SIDEWALKS

INDEX 102-660

SHEET 1 of 1

10/24/2018 7:36:36 AM

Z:\Projects\19002 JEA Boulevard Street FM Upgrade\dwg\TTC_NOTES_DETAILS.dwg Current Layout Tab = TTC-11 Mon Mar 30, 2020 - 06:58

JonesEdmunds
CERTIFICATE OF AUTHORIZATION #1841
730 NE WALDO ROAD, GAINESVILLE, FLORIDA 32641-1552 / 377-5821
8657 BAYPINE ROAD SUITE 300, JACKSONVILLE, FL 32256 / (904) 744-1401

NO.	BY	DATE	REVISIONS
6.			
5.			
4.			
3.			
2.			
1.			

Construction & Engineering Services Consultants, Inc.
9432 Baymeadows Road, Suite 100
Jacksonville, FL 32256
Tel: (904) 652-1186
Business Number CA 27598

C&ES

DESIGNER:	CNM	DESIGN ENGINEER:	CLARO NACU MAGPANTAY
DRAWN BY:	KLB		
DATE:	MARCH 30, 2020		
CHECKED BY:	FEG	FLORIDA REGISTRATION NO.	60164
DATE:	MARCH 30, 2020		

JEA Building Community sm

BOULEVARD FORCE MAIN AND WATER MAIN REPLACEMENT
TTC DETAILS - FDOT INDEX 102 - 660

PROJ. NO.	-
DATE:	MARCH 30, 2020
SCALE:	NONE

NO. SHEETS	35
SHEET NO.	34
DRAWING NO.	TTC-11

Figure 6H-27. Closure at the Side of an Intersection (TA-27)

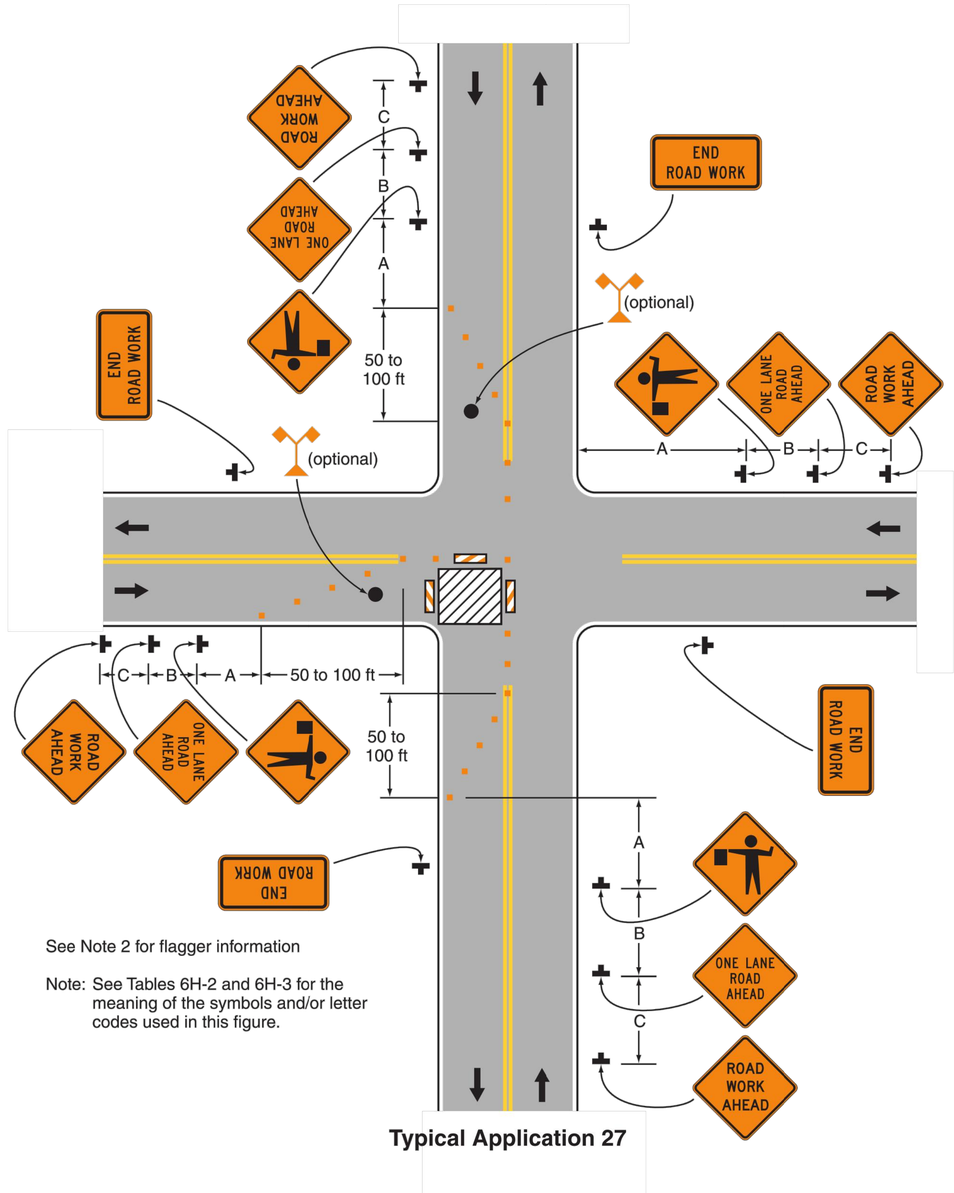

See Note 2 for flagger information

Note: See Tables 6H-2 and 6H-3 for the meaning of the symbols and/or letter codes used in this figure.

Typical Application 27

Z:\Projects\19002 JEA Boulevard Street FM Upgrade\dwg\TTC_NOTES_DETAILS.dwg Current Layout Tab = TTC-12 Mon Mar 30, 2020 - 06:59

JonesEdmunds
730 NE WALDO ROAD, SUITE 600, GAINESVILLE, FL 32641 / (352) 377-5821
8657 BAYPINE ROAD SUITE 100, JACKSONVILLE, FL 32256 / (904) 744-1401
CERTIFICATE OF AUTHORIZATION #1841

NO. BY DATE REVISIONS
6.
5.
4.
3.
2.
1.

C&ES Construction & Engineering Services Consultants, Inc.
9432 Baymeadows Road, Suite 100
Jacksonville, FL 32256
Tel: (904) 652-1186
Business Number CA 27598

DESIGNER: CNM
DRAWN BY: KLB
DATE: MARCH 30, 2020
CHECKED BY: FEG
DATE: MARCH 30, 2020
DESIGN ENGINEER: CLARO NACU MAGPANTAY
FLORIDA REGISTRATION NO. 60164

JEA Building Community sm

BOULEVARD FORCE MAIN AND
WATER MAIN REPLACEMENT
TTC DETAILS - MUTCD 6H - 27

NO. SHEETS 35
SHEET NO. 35
DRAWING NO. TTC-12

PROJ. NO. -
DATE: MARCH 30, 2020
SCALE: NONE