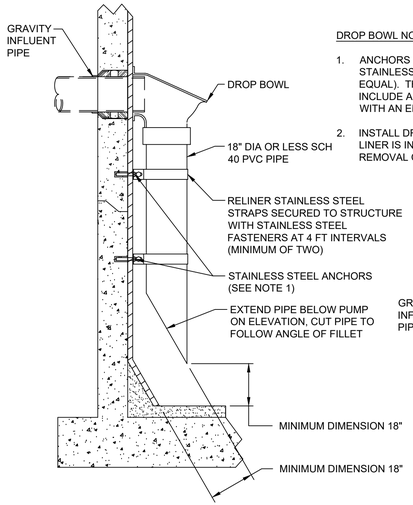

SECTION "B-B"

DROP BOWL NOTES:

1. ANCHORS TO BE CONSTRUCTED OF 316 STAINLESS STEEL "H.A.S." ROD BY HILTI OR EQUAL). THE ANCHORING SYSTEM SHALL INCLUDE ADHESIVE (HILTI H.V.U. OR EQUAL) WITH AN EMBEDMENT DEPTH OF 4 1/4".
2. INSTALL DROP BOWL AFTER THE WET WELL LINER IS INSTALLED. THIS WILL ENSURE EASY REMOVAL OF THE DROP BOWL (IN THE FUTURE).

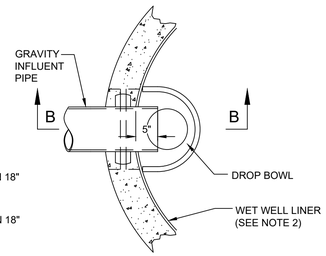

PLAN VIEW

DROP BOWL DETAIL

NOT TO SCALE

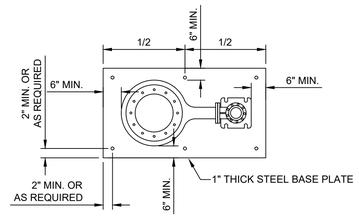

PLAN

BASE PLATE NOTES:

1. PLATE ANCHORS TO BE 3/4" DIAMETER, CONSTRUCTED OF 316 S.S. (H.A.S. ROD) w/ "HVU" ADHESIVE CAPSULE PROVIDING AN EMBEDMENT DEPTH OF 6 5/8". ACCEPTABLE: HILTI OR JEA APPROVED EQUAL.
2. NO EXPANSION ANCHORS ALLOWED.
3. PLATE SIZE: 6" LARGER THAN BASE ELL & PUMP VOLUTE TYP. ALL AROUND.
4. BASE ELL BOLTS AND STUDS TO BE TYPE 316 STAINLESS STEEL. 5. BASE ELL BOLT HEADS SHALL BE WELDED TO UNDER SIDE OF STEEL PLATE.

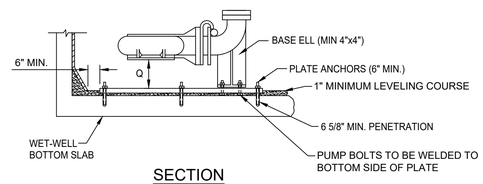

SECTION

SUBMERSIBLE PUMP BASE PLATE DETAIL

NOT TO SCALE

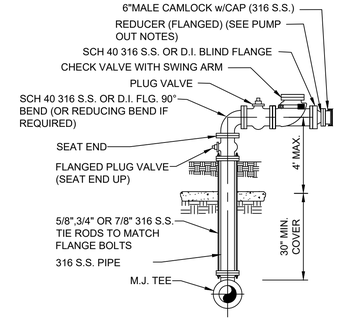

OUTSIDE WETWELL

FOR FLOWS GREATER THAN 1000 GPM OR DISCHARGE PIPING GREATER THAN 8"

FREE STANDING PUMP OUT DETAIL

NOT TO SCALE

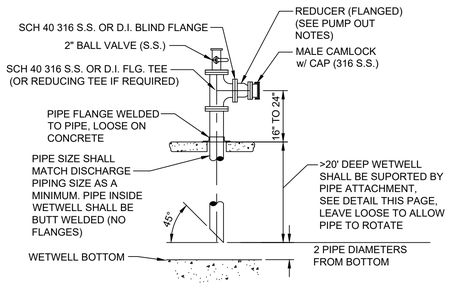

EMERGENCY SUCTION PIPE DETAIL

NOT TO SCALE

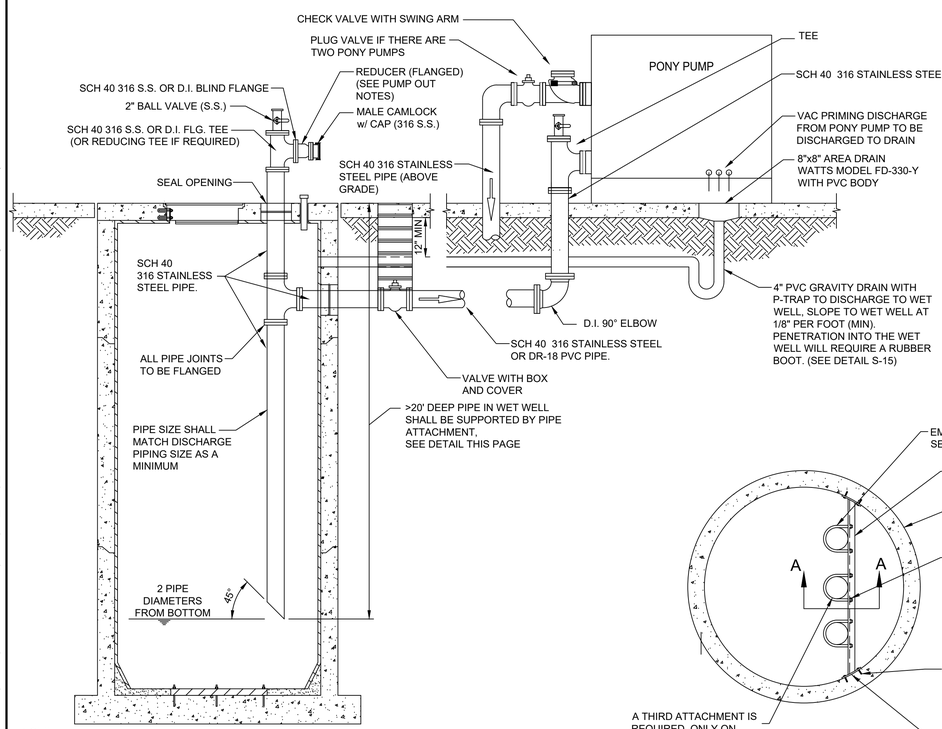

NOTE:
ENGINEER SHALL BE RESPONSIBLE FOR SIZING PIPING FOR NET POSITIVE SUCTION HEAD REQUIRED.

THE ABOVE PIPING IS SHOWN FOR CLARITY, SEE PLAN VIEW FOR PIPE ORIENTATION.

WETWELL CONNECTION TO PONY PUMP DETAIL

NOT TO SCALE

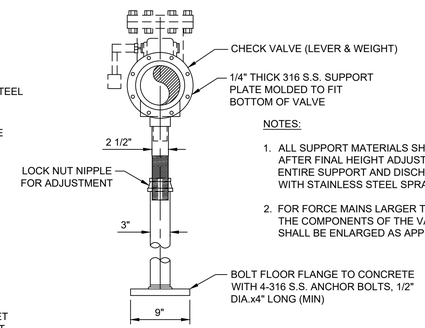

NOTES:

1. ALL SUPPORT MATERIALS SHALL BE 316 S.S. AFTER FINAL HEIGHT ADJUSTMENT, COAT ENTIRE SUPPORT AND DISCHARGE PIPING WITH STAINLESS STEEL SPRAY PAINT.
2. FOR FORCE MAINS LARGER THAN 10" SIZE, THE COMPONENTS OF THE VALVE SUPPORT SHALL BE ENLARGED AS APPROVED BY JEA.

ADJUSTABLE VALVE SUPPORT DETAIL

NOT TO SCALE

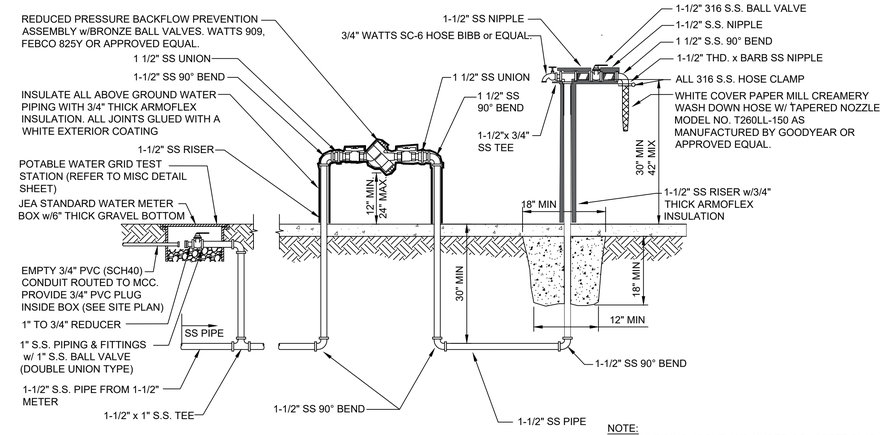

NOTE:
1. ALL PIPING ABOVE AND UNDER CONCRETE SLAB SHALL BE 316 SS SCHEDULE 40.
2. ALL EXTERNAL LONG RUNS OF PIPE SHALL BE SCHEDULE 80 PVC.

1-1/2" HOSE STATION DETAIL

NOT TO SCALE

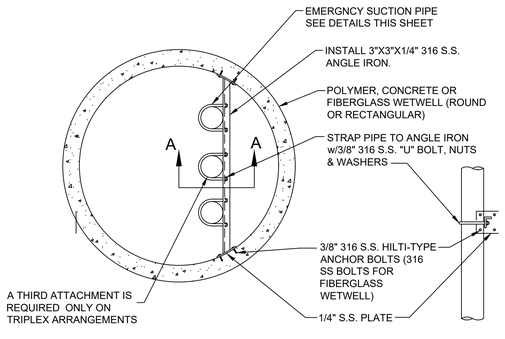

PLAN SECTION 'A-A'

PIPE ATTACHMENT TO WALL DETAIL

REQUIRED FOR ALL PUMPING STATIONS WITH WETWELL 20' DEEP AND GREATER (INSTALLED PRIOR TO SPECIALTY LINER)

NOT TO SCALE

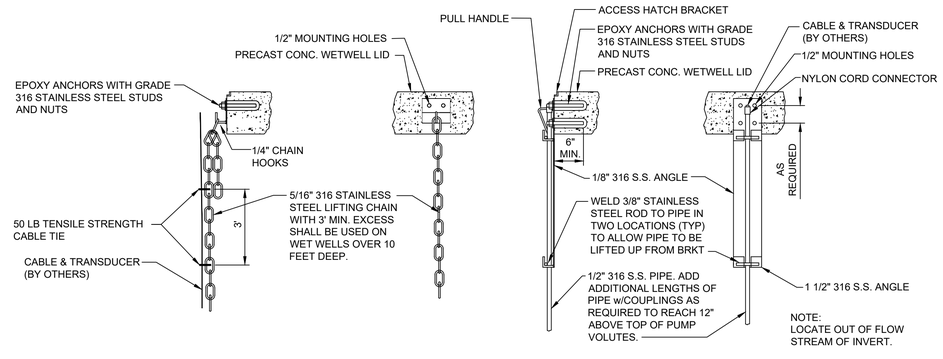

NOTE:
LOCATE OUT OF FLOW STREAM OF INVERT.

SECTION VIEW FRONT VIEW SECTION VIEW FRONT VIEW

TRANSDUCER BRACKET DETAIL

NOT TO SCALE

STANDARD

NO.	BY	DATE	REVISIONS
4.			
3.			
2.	LLOYD HENRY	9/25/2018	UPDATED TO SUBMERSIBLE PUMP BASE
1.			

DESIGN ENGINEER:
FLORIDA REGISTRATION NO.

DESIGNER:
DRAWN BY:
DATE:
CHECKED BY:
DATE:

JEA Building Community.com

JEA STANDARD
PUMP STATION CONSTRUCTION DETAILS
MISCELLANEOUS DETAILS

NO. SHEETS
SHEET NO.
DRAWING NO.
PROJ. NO.
DATE:
SCALE:

\\corp.jea.com\Root\Services\Shared\AutoCAD\henrip\Water Standards\2021\JEA_Pump_Station_Standard_ Sheets_Master_61120.dwg Current Layout Tab = 1 - Misc Details Fri Jun 26, 2020 - 07:17

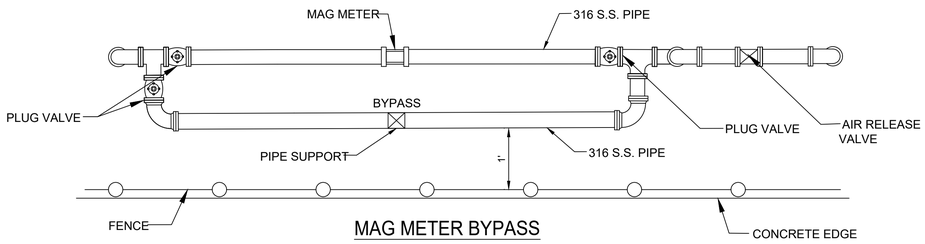

MAG METER BYPASS

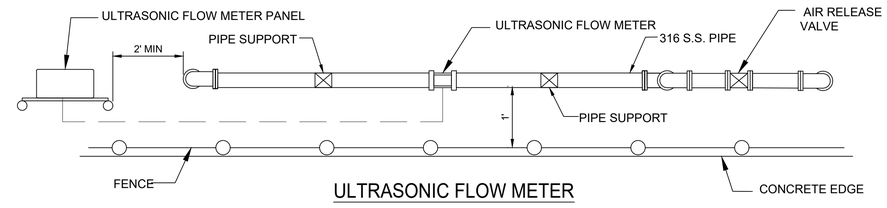

ULTRASONIC FLOW METER

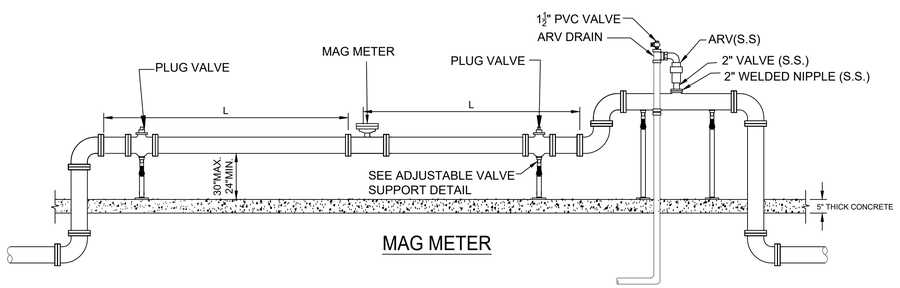

MAG METER

MAG METER DETAIL

NOT TO SCALE

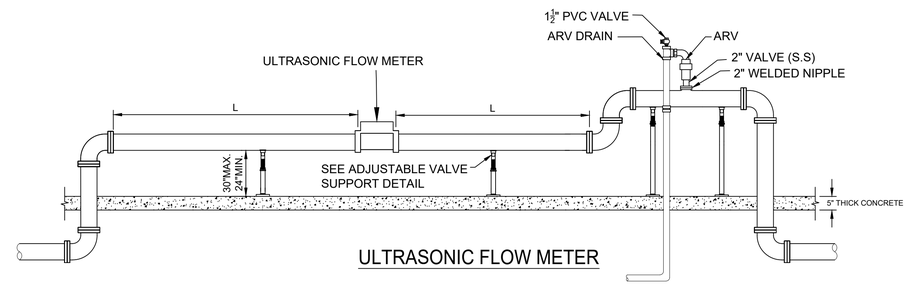

ULTRASONIC FLOW METER

ULTRASONIC FLOW METER DETAIL

NOT TO SCALE

METER NOTES:

1. DIMENSION "L" TO BE DESIGNED BY ENGINEER.

NOTES:

1. CONTRACTOR TO PROVIDE AND INSTALL TRANSDUCER AND GAUGE PER JEA SPECIFICATIONS.

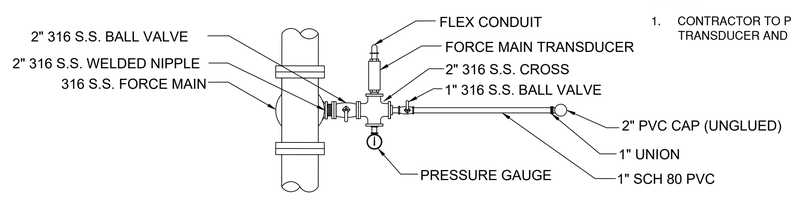

TOP VIEW

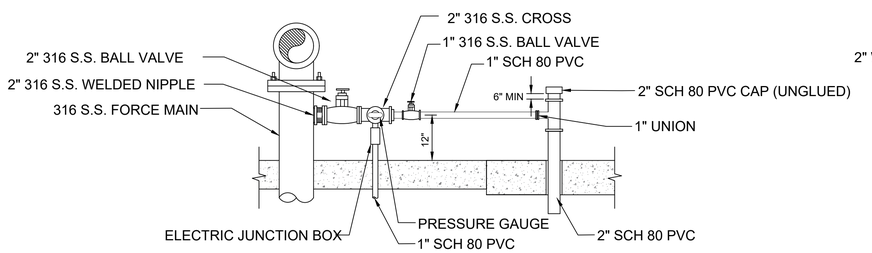

SIDE VIEW

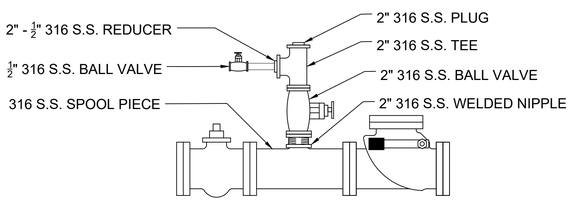

FUTURE DISCHARGE ARV DETAIL

NOT TO SCALE

FORCE MAIN TRANSDUCER DETAIL

NOT TO SCALE

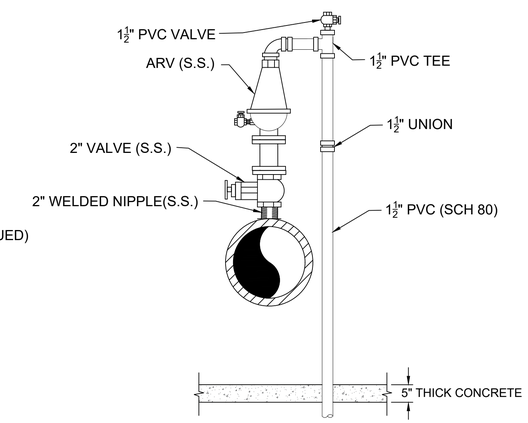

ARV DRAIN DETAIL

NOT TO SCALE

STANDARD

NO.	BY	DATE	REVISIONS
4.			
3.	LLOYD HENRY	11/20/2019	ADDED FORCE MAIN TRANSDUCER DETAIL
2.	LLOYD HENRY	9/25/2018	UPDATED GEOR CONTROL DETAIL
1.			

DESIGN ENGINEER:
FLORIDA REGISTRATION NO.

DESIGNER:
DRAWN BY:
DATE:
CHECKED BY:
DATE:

JEA Building Community.com

JEA STANDARD
PUMP STATION CONSTRUCTION DETAILS
MISCELLANEOUS DETAILS 2

PROJ. NO.
DATE:
SCALE:

NO. SHEETS
SHEET NO.
DRAWING NO.

\\corp.jea.com\Root\Services\Shared\AutoCAD\henrlq\Water Standards\2021\JEA_Pump_Station_Standard_ Sheets_Master_61120.dwg Current Layout Tab = 2- Misc Details Fri Jun 26, 2020 - 07:17

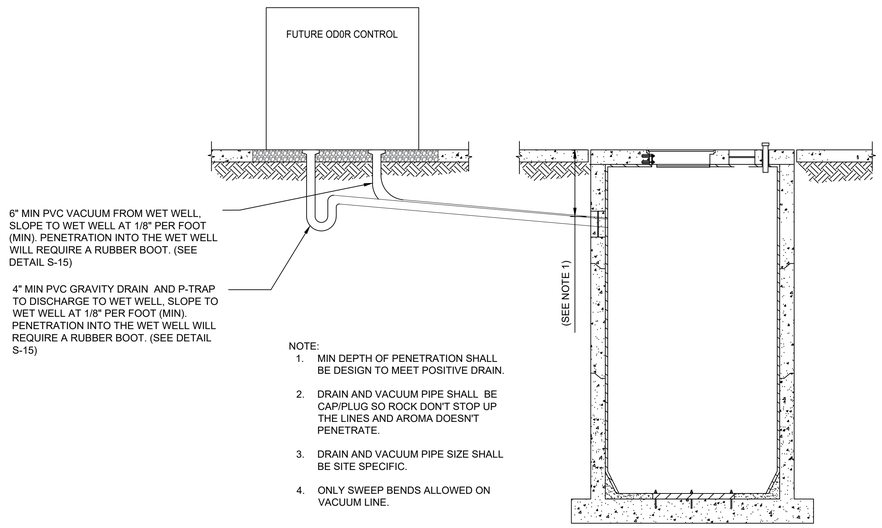

NOTE:
1. MIN DEPTH OF PENETRATION SHALL BE DESIGN TO MEET POSITIVE DRAIN.
2. DRAIN AND VACUUM PIPE SHALL BE CAP/PLUG SO ROCK DON'T STOP UP THE LINES AND AROMA DOESN'T PENETRATE.
3. DRAIN AND VACUUM PIPE SIZE SHALL BE SITE SPECIFIC.
4. ONLY SWEEP BENDS ALLOWED ON VACUUM LINE.

ODOR CONTROL DRAIN AND VACUUM CONNECTION TO WET WELL DETAIL

NOT TO SCALE

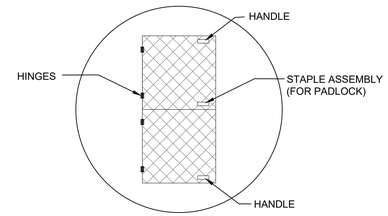

WET WELL HATCH DETAIL

NOT TO SCALE

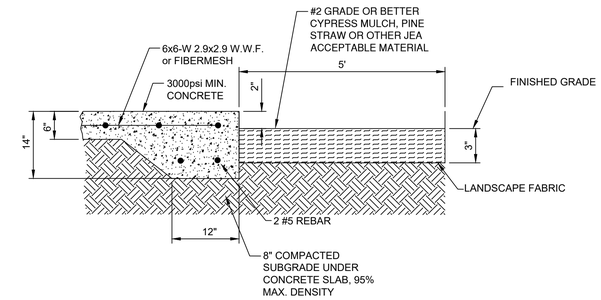

CONCRETE SLAB AND GROUND COVER DETAIL

NOT TO SCALE

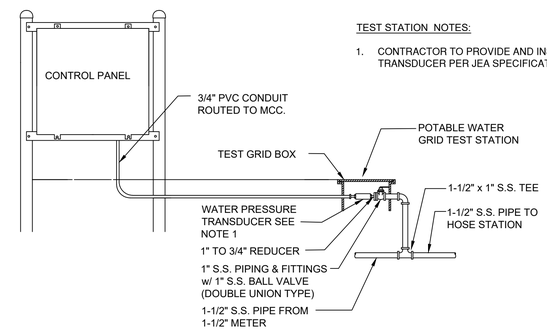

TEST STATION NOTES:

1. CONTRACTOR TO PROVIDE AND INSTALL TRANSDUCER PER JEA SPECIFICATIONS.

WATER TEST STATION DETAIL

NOT TO SCALE

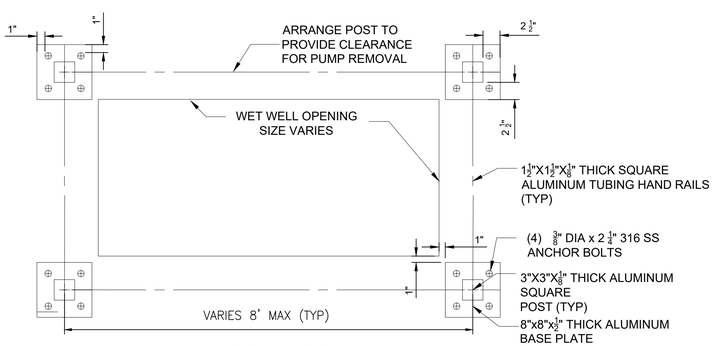

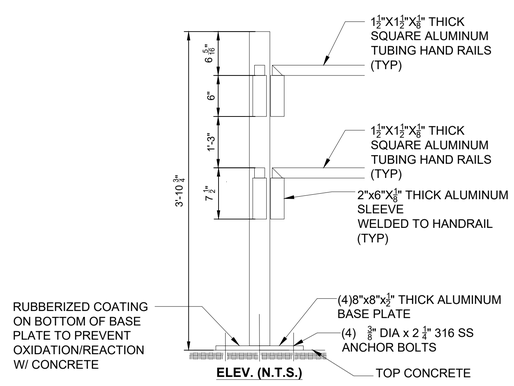

PUMP STATION HANDRAIL DETAIL

NOT TO SCALE

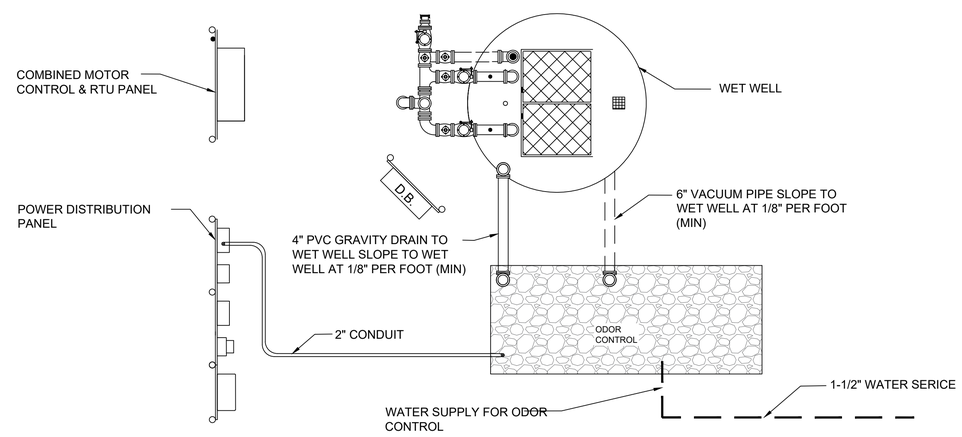

ODOR CONTROL STUB OUT DETAIL

NOT TO SCALE

STANDARD

NO.	BY	DATE	REVISIONS
4.			
3.	LLOYD HENRY	9/10/2019	UPDATED WATER TEST STATION DETAIL
2.	LLOYD HENRY	9/25/2018	UPDATED ODOR CONTROL DETAIL
1.			

DESIGN ENGINEER:
FLORIDA REGISTRATION NO.

DESIGNER:
DRAWN BY:
DATE:
CHECKED BY:
DATE:

JEA Building Community.com

JEA STANDARD
PUMP STATION CONSTRUCTION DETAILS
MISCELLANEOUS DETAILS 3

PROJ. NO.
DATE:
SCALE:
NO. SHEETS
SHEET NO.
DRAWING NO.

\\corp.jea.com\Root\Services\Shared\AutoCAD\henrlq\Water Standards\2021\JEA_Pump_Station_Standard_ Sheets_Master_61120.dwg Current Layout Tab = 3– Misc Details Fri Jun 26, 2020 – 07:17

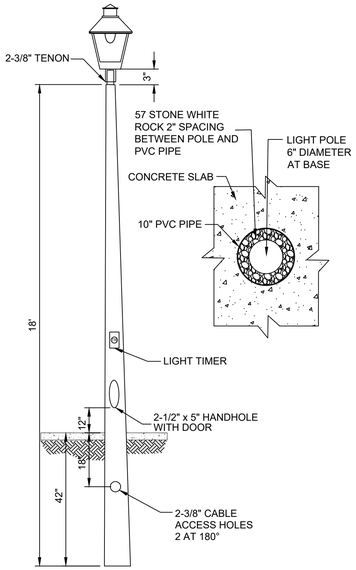

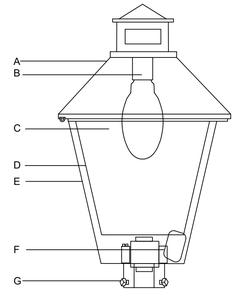

A. TOP
HINGED DIE-CAST ALUMINUM TOP WITH CUPOLA COVER.

B. SOCKET
VERTICAL: BASE UP STANDARD ON TYPE I,

C. LAMP
70W HIGH PRESSURE SODIUM

D. REFACTOR
INJECTION MOLDED ACRYLIC REFRACTOR PANELS.

E. HOUSING
DIE-CAST ALUMINUM BADE HOUSING.
STANDARD COLOR: BLACK

F. STARTER
PLUG-IN STARTER

G. MOUNTING
SELF-ALIGNING POLE TOP FITTER FOR 2-3/8 O.D. TENONS. SQUARE HEADED 1-1/4" POLYMER COATED MOUNTING BOLTS.

H. TERMINAL BLOCK
TERMINAL BLOCK STANDARD.

I. POLE
FIBERGLASS DIRECT BURIED
A: BLACK

SPECIFICATION:

COOPER LIGHTING
LEXINGTON LXF
CATALOG No.: LWF70SH233U0115
70W HPS REC-HPF 120V PCR, TOOL-LESS

70W
HIGH PRESSURE SODIUM
METAL HALIDE MERCURY

SITE LIGHT DETAIL

NOT TO SCALE

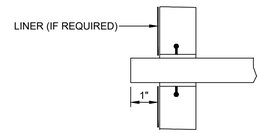

SECTION A-A

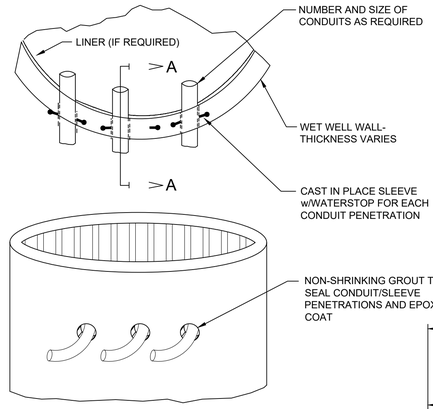

NOTES:

1. CORE BORING FOR CONDUITS SHALL BE ALLOWED FOR EXISTING WET WELLS ONLY.
2. EXTEND CONDUITS AND ARV DRAIN 1" INSIDE WET WELL.
3. FOR POLYMER WET WELLS USE POLYMER GROUT TO SEAL AROUND CONDUIT PENETRATIONS.
4. FOR CONCRETE WET WET WELLS USE NON-SHRINKING GROUT TO SEAL AROUND CONDUIT PENETRATIONS.
   MANUFACTURER: QUIKRETE MODEL: 1585
5. IF INTERIOR OF THE CONCRETE WET WELL IS DAMAGED, REPAIR USING A SPECIAL LINING PRODUCT: SEE SPEC. SECTION #446.
6. SEAL CONDUIT AT THE WET WELL USING DUCT SEAL.
   MANUFACTURER: BLACKBURN
   MODEL: DX5, S-1# DUCT SEAL
7. LOCATE CONDUIT SLEEVE SO AS NOT TO INTERFERE WITH WET WELL MAINTENANCE AND OPERATION.
8. MINIMUM FOUR 1-INCH AND THREE 2-1/2-INCH CONDUITS.
9. ODDER CONTROL VACUUM PIPING WILL REQUIRE A RUBBER BOOT (SEE DETAIL S-15)

WET WELL PENETRATION DETAIL

NOT TO SCALE

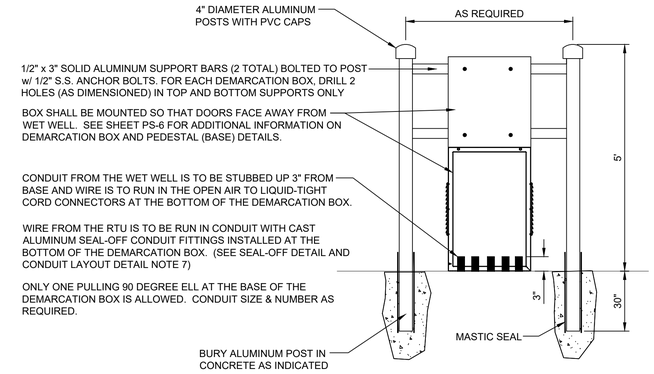

DEMARCATION BOX DETAILS

NOT TO SCALE

MOTOR TERMINAL BLOCKS SHALL BE WAGO "POWER CAGE CLAMP" SERIES. CONDUCTOR AMPACITY, VOLTAGE, AND WIRE SIZE SHALL DETERMINE FINAL SELECTION.

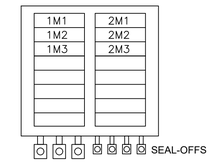

SEAL-OFF DETAIL

SEE DEMARCATION BOX DRAWINGS FOR ADDITIONAL INFORMATION

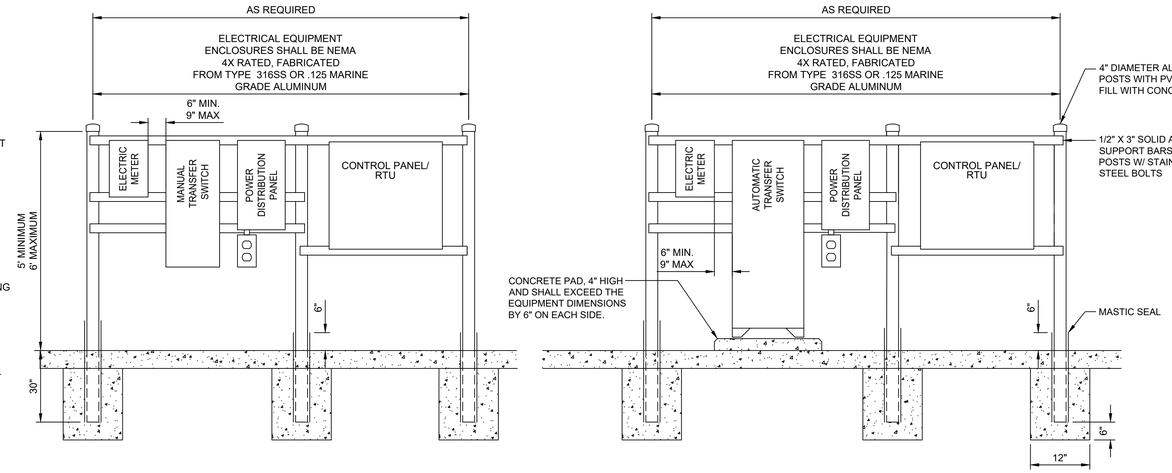

PUMP STATIONS WITHOUT STANDBY GENERATOR

PUMP STATIONS WITH STANDBY GENERATOR

ELECTRICAL EQUIPMENT RACK DETAIL

NOT TO SCALE

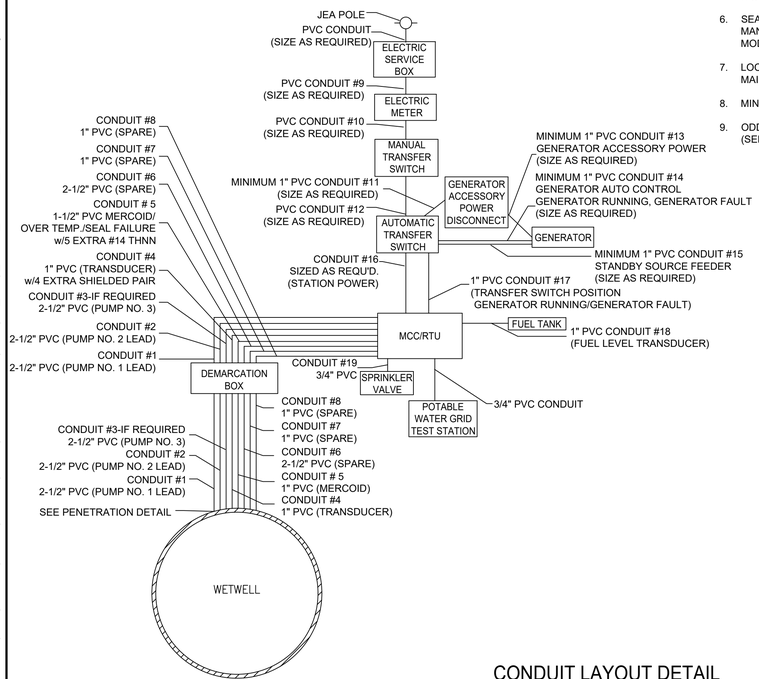

CONDUIT LAYOUT DETAIL

NOT TO SCALE

NOTES:

1. MINIMUM SCHEDULE 80 PVC CONDUIT SIZE AS SHOWN. CONDUIT SIZE MUST MEET NEC REQUIREMENTS FOR CONDUIT FILL.
2. ALL CONDUITS THAT RUN STRAIGHT FROM THE MCC TO THE DEMARCATION BOX SHALL BE ALLOWED TWO 90° BENDS. EACH CONDUIT SHALL ENTER THE BOTTOM OF THE CONTROL PANEL SEPARATELY.
3. INSTALL SPARE WIRE FROM DEMARCATION BOX TO MCC AND LABEL AS PER SPECS.
   A) 5-#14 THHN
   B) 4-SHIELDED PAIR
4. SPARE CONDUIT BETWEEN WETWELL AND DEMARCATION BOX TO BE THREADED, CAPPED AND TERMINATED INSIDE BOX.
5. SPARE CONDUIT BETWEEN DEMARCATION BOX AND MCC. CAP OFF BELOW DEMARCATION BOX AND TERMINATE INSIDE THE MCC CABINET
6. CONDUIT BETWEEN DEMARCATION BOX AND WETWELL SHALL HAVE ONLY ONE 90° BEND.
7. INSTALL MALLEABLE SEAL OFF'S AT DEMARCATION BOX END FOR CONDUITS BETWEEN DEMARCATION BOX AND MCC.
8. INSTALL END BELLS AND LARGE CABLE HOOKS ON PUMP LEAD CONDUITS.

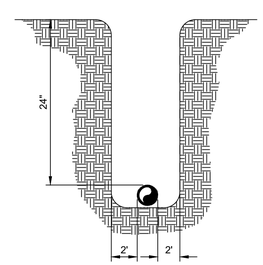

SINGLE CONDUIT RUN

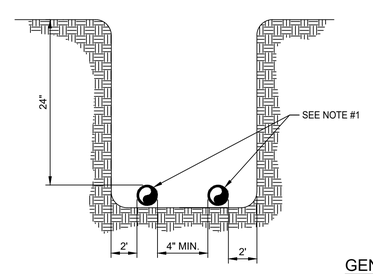

MULTIPLE CONDUIT RUN

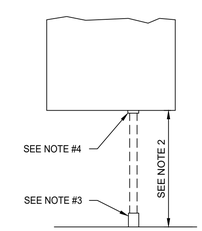

GENERAL ABOVE GROUND CONDUIT RUN SHOWING COUPLING AND CONNECTOR

NOTES:

1. UNDERGROUND CONDUIT SCHEDULE 80 PVC.
   MANUFACTURER: CARLON
2. CONDUIT ABOVE GROUND TO CABINETS SCHEDULE 80 PVC NEMA TC-2 SUNLIGHT RESISTANT.
   MANUFACTURER: CARLON
3. UNDERGROUND PVC COUPLED TO ABOVE GROUND PVC WITH A PVC COUPLING. MANUFACTURER: CARLON
4. ABOVE GROUND PVC CONNECTED TO RTU AND MCC USING A PVC CONNECTOR. MANUFACTURER: CARLON

ABOVE AND UNDERGROUND ELECTRICAL RACEWAY DETAILS

NOT TO SCALE

STANDARD

NO.	BY	DATE	REVISIONS
4.			
3.			
2.	LLOYD HENRY	9/25/2018	UPDATED ELECTRICAL EQUIPMENT RACK
1.			

DESIGN ENGINEER:
FLORIDA REGISTRATION NO.

DESIGNER:
DRAWN BY:
DATE:
CHECKED BY:
DATE:

JEA Building Community

JEA STANDARD
PUMP STATION ELECTRIC DETAILS
ELECTRIC DETAILS

PROJ. NO.
DATE:
SCALE:
NO. SHEETS
SHEET NO.
DRAWING NO.

\\corp.jea.com\Root\Services\Shared\AutoCAD\henrla\Water Standards\2021\JEA_Pump_Station_Standard_ Sheets_Master_61120.dwg Current Layout Tab = 4 - Elec Details Fri Jun 26, 2020 - 07:17

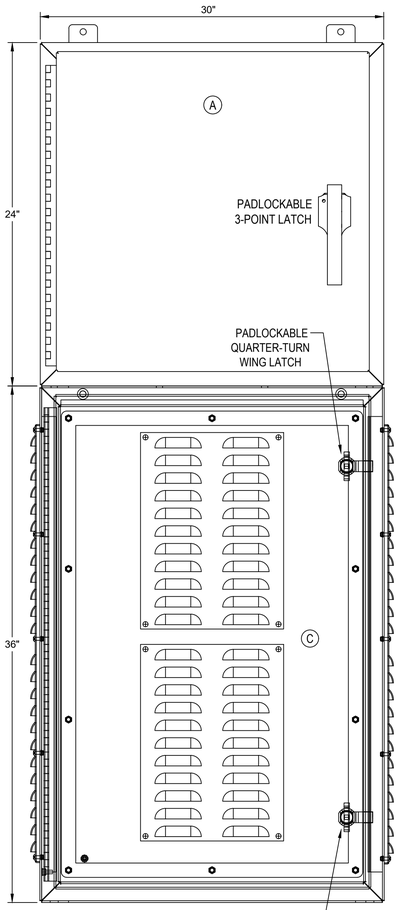

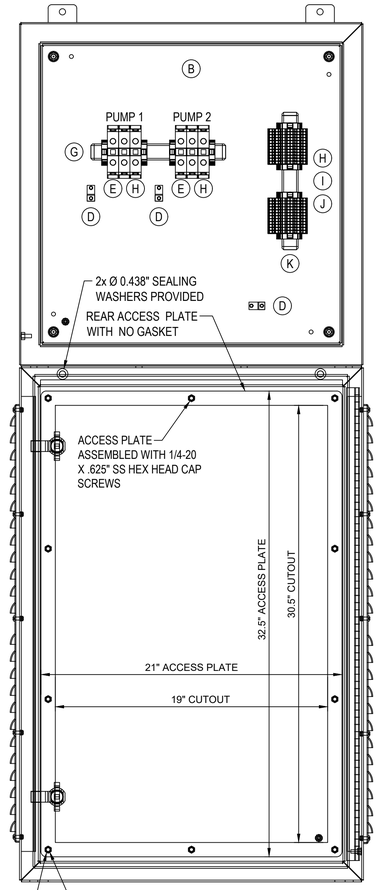

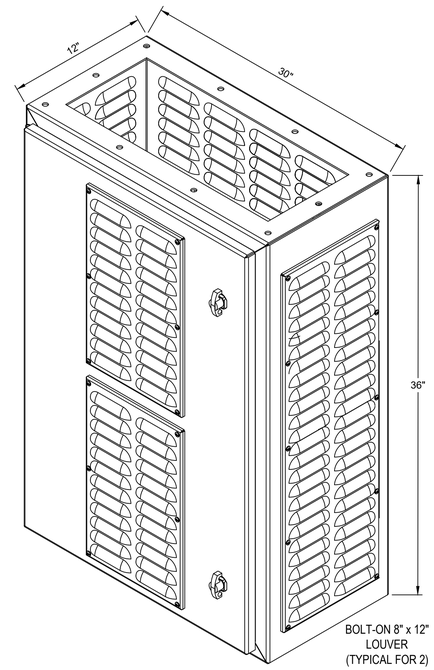

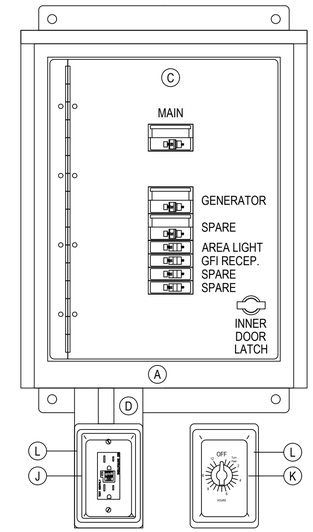

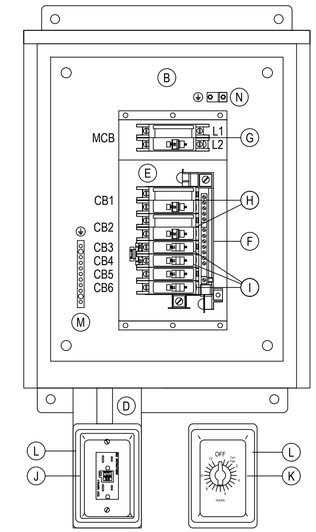

POWER DISTRIBUTION PANEL (TYPICAL 240VAC - 1 PHASE SHOWN)

ENCLOSURE:
SPLRHCSS6-20168 (20"H x 16"W x 8"D) NEMA 12/3R RATED, FABRICATED FROM TYPE 316 STAINLESS STEEL. OUTER DOOR IS FITTED WITH A PADLOCKABLE 3-POINT LATCH.

BACK PANEL:
SPP-2016 (17"H x 13"W) FABRICATED FROM 14ga. CARBON STEEL WITH WHITE POLYESTER POWDER COAT FINISH.

HINGED INNER DOOR:
FABRICATED FROM .125 ALUMINUM WITH CONTINUOUS HINGE AND TWIST LATCH.

240 VAC DISTRIBUTION PANEL NOTES:

1. POWER DISTRIBUTION PANEL 120/240V 1 PHASE WITH 60A 2-POLE MAIN BREAKER.
2. PANEL OUTER DOOR SHALL BE HINGED AND PADLOCKABLE.
3. ALL LIVE PARTS SHALL BE ENCLOSED FOR PERSONNEL SAFETY AND EQUIPMENT PROTECTION.
4. GROUNDING TERMINAL SHALL BE PROVIDED IN THE ENCLOSURE
5. THE ENCLOSURE SHALL BE NEMA 3R RATED.
6. IF ENCLOSURE IS FABRICATED WITHIN AN AUTHORIZED PANEL SHOP, .125 MARINE GRADE ALUMINUM SHALL BE USED.
7. IF ENCLOSURE IS PURCHASED FROM AN AUTHORIZED DISTRIBUTOR, TYPE 316 STAINLESS STEEL MAY ALSO BE USED.
8. THE LOAD CENTER MOUNTING BASE PLATE SHALL BE UL LISTED, RATED AT 240 VOLTS / 200 AMPS MINIMUM.
9. THE LOAD CENTER BUS MATERIAL SHALL BE ALUMINUM OR TIN-PLATED ALUMINUM.
10. THE LOAD CENTER SHALL HAVE EIGHT SPACES.
11. BREAKERS MAY BE SNAP-IN; JEA DETERMINED LOCATIONS WITH HIGH-VIBRATION REQUIRE BOLT-IN TYPE BREAKERS.
12. PANEL SHALL CONTAIN TWO 2-POLE 30-AMP BREAKERS: (1) GENERATOR USE, (1) SPARE.
13. PANEL SHALL CONTAIN FOUR 1-POLE 15-AMP BREAKERS: (1) LIGHT, (1) GFI, (2) SPARES.
14. PANEL SHALL HAVE A 20-AMP OUTDOOR RATED GFCI RECEPTACLE AND SPRING-WOUND COMMERCIAL RATED LIGHT TIMER.
15. GFCI AND TIMER SHALL BE MOUNTED ACCORDING TO N.E.C. STANDARDS.
16. GFCI AND TIMER SHALL BE RIGIDLY MOUNTED ON THE EXTERIOR OF THE PANEL USING TYPE 316 SS OR ALUMINUM BRACKETS.

480 VAC DISTRIBUTION PANEL NOTES:

1. STANDARD PANEL: 3 KVA TRANSFORMER 480V-120/480V WITH 2-POLE 20-AMP MAIN BREAKER.
2. PANEL WITH ODOR CONTROL: 5 KVA TRANSFORMER 480V-120/480V WITH 2-POLE 30-AMP MAIN BREAKER.
3. PANEL WITH GENERATOR: 10 KVA TRANSFORMER 480V-120/480V WITH 2-POLE 60-AMP MAIN BREAKER.
4. PANEL OUTER DOOR SHALL BE HINGED AND PADLOCKABLE.
5. ALL LIVE PARTS SHALL BE ENCLOSED FOR PERSONNEL SAFETY AND EQUIPMENT PROTECTION.
6. GROUNDING TERMINAL SHALL BE PROVIDED IN THE ENCLOSURE
7. THE ENCLOSURE SHALL BE NEMA 3R RATED.
8. IF ENCLOSURE IS FABRICATED WITHIN AN AUTHORIZED PANEL SHOP, .125 MARINE GRADE ALUMINUM SHALL BE USED.
9. IF ENCLOSURE IS PURCHASED FROM AN AUTHORIZED DISTRIBUTOR, TYPE 316 STAINLESS STEEL MAY ALSO BE USED.
10. THE LOAD CENTER MOUNTING BASE PLATE SHALL BE UL LISTED, RATED AT 240 VOLTS / 200 AMPS MINIMUM.
11. THE LOAD CENTER BUS MATERIAL SHALL BE ALUMINUM OR TIN-PLATED ALUMINUM.
12. THE LOAD CENTER SHALL HAVE EIGHT SPACES.
13. BREAKERS MAY BE SNAP-IN; JEA DETERMINED LOCATIONS WITH HIGH-VIBRATION REQUIRE BOLT-IN TYPE BREAKERS.
14. PANEL SHALL CONTAIN TWO 2-POLE 30-AMP BREAKERS: (1) GENERATOR USE, (1) SPARE.
15. PANEL SHALL CONTAIN FOUR 1-POLE 15-AMP BREAKERS: (1) LIGHT, (1) GFI, (2) SPARES.
16. PANEL SHALL HAVE A 20-AMP OUTDOOR RATED GFCI RECEPTACLE AND SPRING-WOUND COMMERCIAL RATED LIGHT TIMER.
17. GFCI AND TIMER SHALL BE MOUNTED ACCORDING TO N.E.C. STANDARDS.
18. GFCI AND TIMER SHALL BE RIGIDLY MOUNTED ON THE EXTERIOR OF THE PANEL USING TYPE 316 SS OR ALUMINUM BRACKETS.

DEMARCATION BOX and PEDESTAL

ENCLOSURE:
SPN4AL-243012 (24"H x 30"W x 12"D) NEMA 4X RATED, FABRICATED FROM .125 MARINE GRADE ALUMINUM. OUTER DOOR IS FITTED WITH A PADLOCKABLE 3-POINT LATCH.

BACK PANEL:
SPP-3030 (27"H x 27"W) FABRICATED FROM 12ga. CARBON STEEL WITH WHITE POLYESTER POWDER COAT FINISH.

PEDESTAL:
SPN12AL-363012-215 (36"H x 30"W x 12"D) NEMA 12 RATED, FABRICATED FROM .125 MARINE GRADE ALUMINUM. OUTER DOOR IS FITTED WITH TWO PADLOCKABLE QUARTER-TURN LATCHES.

NOTE 1: SELECT APPROPRIATELY SIZED TERMINAL BLOCK BASED ON MOTOR LOAD
NOTE 2: INSERTING MULTIPLE CABLES INTO A SINGLE TERMINAL IS PROHIBITED. USE A SECOND BLOCK AND THE ASSOCIATED ADJACENT JUMPER
NOTE 3: USE PRINTED GUIDE ON TERMINAL BLOCKS TO MEASURE CORRECT CABLE STRIP LENGTH
NOTE 4: ENGINEER APPROVED EQUAL COMPONENT MAY BE SUBSTITUTED

BILLS of MATERIAL

DEMARCATION BOX and PEDESTAL

		QTY	MANUFACTURER	PART NUMBER	DESCRIPTION
	A	1	SCHAEFER	SPN4AL-243012	ENCLOSURE, NEMA 4X ALUMINUM, 3-PT.
	B	1	SCHAEFER	SPP-2430	MOUNTING PANEL, 12ga. PAINTED STEEL
	C	1	SCHAEFER	SPN12AL-363012-215	PEDESTAL, NEMA 12 ALUMINUM, LOUVERS
	D	3	PANDUIT	LAMA2-14-QY	GROUND LUG, DUAL-RATED, #2-14 AWG
3,2,1	E	6	WAGO	285-135	TERMINAL BLOCK, 1 POLE, 115A
			WAGO	285-150	TERMINAL BLOCK, 1 POLE, 150A
			WAGO	285-195	TERMINAL BLOCK, 1 POLE, 200A
			WAGO	285-1185	TERMINAL BLOCK, 1 POLE, 310A
2	F	-	WAGO	285-435	ADJACENT JUMPER, 115A
			WAGO	285-450	ADJACENT JUMPER, 150A
			WAGO	285-495	ADJACENT JUMPER, 200A
			WAGO	285-1171	ADJACENT JUMPER, 310A
	G	1	WAGO	210-118	2M CARRIER RAIL, STEEL, UNSLOTTED
	H	8	WAGO	249-197	TERMINAL END STOP, GRAY
	I	24	WAGO	2002-1401	CONTROL TERMINALS, 24A, 800V, SPRING
	J	2	WAGO	2002-1492	TERMINAL END / PARTITION PLATE, ORANGE
	K	1	WAGO	210-112	2M DIN RAIL, GALVANIZED, SLOTTED

POWER DISTRIBUTION PANEL (AS SHOWN)

		QTY	MANUFACTURER	PART NUMBER	DESCRIPTION
	A	1	SCHAEFER	SPLRHCSS6-20168	ENCLOSURE, NEMA 12/3R, 316 SS, 3-PT.
	B	1	SCHAEFER	SPP-2016	MOUNTING PANEL, 14ga. PAINTED STEEL
	C	1	OEM	-	HINGED INNER DOOR, .125 ALUMINUM
	D	1	OEM	GFI MOUNT	TO RIGIDLY MOUNT EXTERNAL DEVICES
	E	1	OEM	BREAKER MOUNT	TO RAISE CBs FLUSH WITH INNER DOOR
	F	1	SQUARE D	QON816L100	100 AMP LOAD CENTER INTERIOR ASSY.
	G	1	SQUARE D	QOU260	MCB MAIN CIRCUIT BREAKER, 2 POLE, 60A
	H	2	SQUARE D	QO230	CB1-CB2 GEN. BREAKER, 2 POLE, 30A
	I	4	SQUARE D	QO115	CB3-CB6 CONTROL BREAKER, 1 POLE, 15A
	J	1	HUBBELL	GF20WLA	DUPLEX GFCI RECEPTACLE, 20A
4	K	1	INTERMATIC	FF30MC	SPRING-WOUND TIMER, 30 min. NO HOLD
	L	1	INTERMATIC	WP1030C	SINGLE GANG WEATHER-PROOF COVER, CLEAR
	M	1	SQUARE D	PK9GTA	EQUIPMENT GROUND BAR, 9-POINT
	N	1	PANDUIT	LAMA2-14-QY	GROUND LUG, DUAL-RATED, #2-14 AWG

POWER DISTRIBUTION PANEL SCHEMATIC:

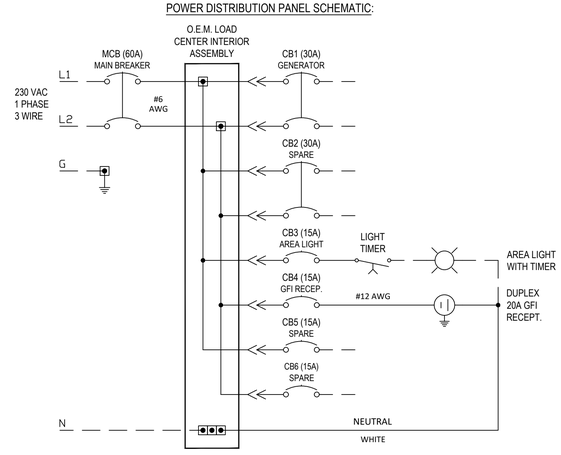

STANDARD

NO.	BY	DATE	REVISIONS
4.			
3.			
2.			
1.	LLOYD HENRY	9/25/2018	TITLE ADDED

DESIGN ENGINEER:
FLORIDA REGISTRATION NO.

DESIGNER:
DRAWN BY:
DATE:
CHECKED BY:
DATE:

JEA Building Community.com

JEA STANDARD
PUMP STATION ELECTRIC DETAILS
DEMARCATION BOX & POWER DISTRIBUTION PANEL

NO. SHEETS
PROJ. NO.
SHEET NO.
DATE:
DRAWING NO.
SCALE:

\\corp.jea.com\Root\Services\Shared\AutoCAD\henrlo\Water Standards\2021\JEA_Pump_Station_Standard_ Sheets_Master_61120.dwg Current Layout Tab = 5 - Elec Boxes Details Fri Jun 26, 2020 - 07:17

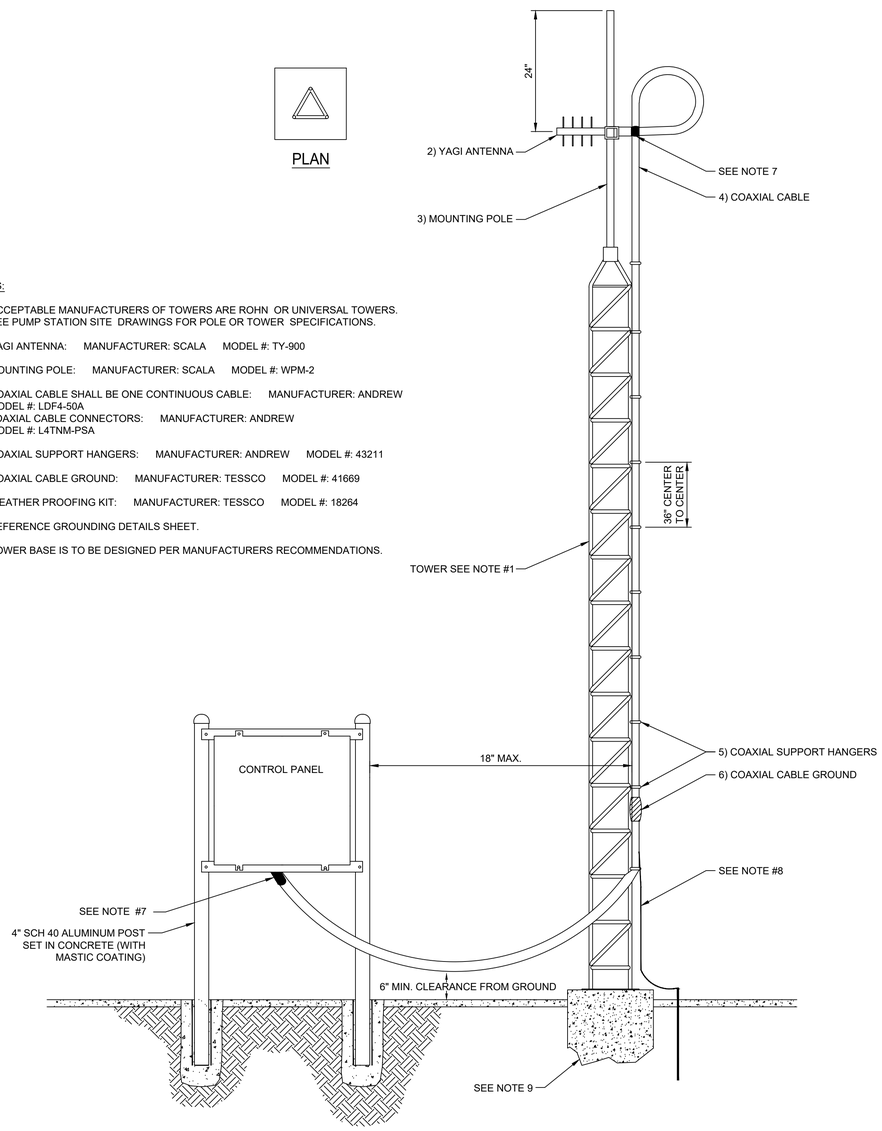

NOTES:

1. ACCEPTABLE MANUFACTURERS OF TOWERS ARE ROHN OR UNIVERSAL TOWERS. SEE PUMP STATION SITE DRAWINGS FOR POLE OR TOWER SPECIFICATIONS.
2. YAGI ANTENNA: MANUFACTURER: SCALA MODEL #: TY-900
3. MOUNTING POLE: MANUFACTURER: SCALA MODEL #: WPM-2
4. COAXIAL CABLE SHALL BE ONE CONTINUOUS CABLE: MANUFACTURER: ANDREW MODEL #: LDF4-50A
   COAXIAL CABLE CONNECTORS: MANUFACTURER: ANDREW MODEL #: L4TNM-PSA
5. COAXIAL SUPPORT HANGERS: MANUFACTURER: ANDREW MODEL #: 43211
6. COAXIAL CABLE GROUND: MANUFACTURER: TESSCO MODEL #: 41669
7. WEATHER PROOFING KIT: MANUFACTURER: TESSCO MODEL #: 18264
8. REFERENCE GROUNDING DETAILS SHEET.
9. TOWER BASE IS TO BE DESIGNED PER MANUFACTURERS RECOMMENDATIONS.

ALTERNATE POLE SCADA INSTALLATION DETAIL

FOR POLE HEIGHTS 20 FEET AND ABOVE
NOT TO SCALE

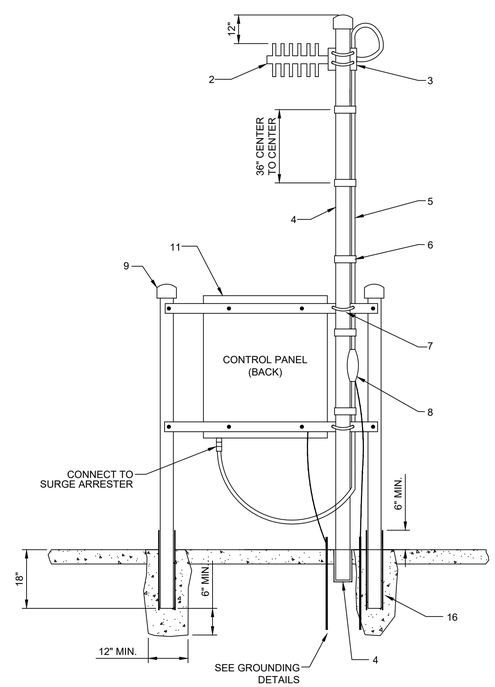

SCADA INSTALLATION DETAIL

FOR POLE HEIGHTS LESS THAN 20 FEET
NOT TO SCALE

NOTES:

1. SEE PUMP STATION SITE DRAWINGS FOR POLE OR TOWER SPECIFICATIONS.
2. YAGI ANTENNA, COMES W/ MOUNTING HARDWARE(MAST SHALL BE SLEEVED THRU CONCRETE TO ALLOW ROTATION (DO NOT USE WOOD POLE MOUNT)
   MANUFACTURE: SCALA
   MODEL NUMBER: TY-900
3. COAX CONNECTOR
   MANUFACTURE: WIRELESS SOLUTIONS
   MODEL NUMBER: NM50V-1/2
4. 2 $\frac{1}{2}$" O.D. SCD. 40 ALUMINUM 20' POLE.
   POLE SHALL BE SLEEVED THROUGH CONCRETE TO ALLOW FOR ROTATION
5. COAXIAL CABLE SHALL BE ONE CONTINUOUS CABLE
   MANUFACTURER: ANDREW
   MODEL #: LDF4-50A
6. STAINLESS STEEL STRAPS 3' O/C
   MANUFACTURE: WIRELESS SOLUTIONS
   MODEL NUMBER: RM-A300
7. 316 STAINLESS STEEL U-BOLTS
   MANUFACTURE: ANY DOMESTIC BRAND
   MODEL NUMBER: N/A
8. COAXIAL CABLE GROUND
   MANUFACTURER: TESSCO
   MODEL #: 41669
9. 4" PVC CAPS
10. 4" DIA. ALUMINUM POST
11. 1/2"X3" SOLID ALUMINUM SUPPORT BARS (2 TOTAL) BOLTED TO POST W/ 5/8" S.S. ANCHOR BOLTS. DRILL 2 HOLES (AS DIMENSIONED ON DETAIL) IN TOP & BOTTOM SUPPORTS ONLY
12. BURY ALUMINUM POST IN CONCRETE AS SHOWN ON DRAWING.
13. INSTALL RTU MOUNT SO THAT WHEN CABINET IS ATTACHED DOOR IS FACING NORTH UNLESS DOOR HAS SUN SHIELD. IN ALL INSTANCES JEA PREFERS THE DOOR TO FACE NORTH IF POSSIBLE.
14. CABINET SHALL HAVE CLEARANCE TO OPEN DOOR COMPLETELY.
15. SCADA SYSTEM WOOD POLE ALTERNATE DETAIL TO BE USED ONLY WHEN ADDITIONAL ANTENNA HEIGHT IS REQUIRED, AND APPROVED.
16. MASTIC SEAL ALL POSTS WHICH ARE EMBEDDED IN CONCRETE.
17. ALL MATERIALS MUST MEET OR EXCEED JEA SPECIFICATIONS

STANDARD

NO.	BY	DATE	REVISIONS
4.			
3.			
2.			
1.	LLOYD HENRY	9/25/2018	ALTERNATE POLE SCADA INSTALLATION DETAIL

DESIGN ENGINEER:
FLORIDA REGISTRATION NO.

DESIGNER:
DRAWN BY:
DATE:
CHECKED BY:
DATE:

JEA Building Community

JEA STANDARD
PUMP STATION ELECTRIC DETAILS
SCADA INSTALLATION

PROJ. NO.
DATE:
SCALE:
NO. SHEETS
SHEET NO.
DRAWING NO.

\\corp.jea.com\Root\Services\Shared\AutoCAD\henrla\Water Standards\2021\JEA_Pump_Station_Standard_ Sheets_Master_61120.dwg Current Layout Tab = 6 – Scada Details Fri Jun 26, 2020 – 07:17

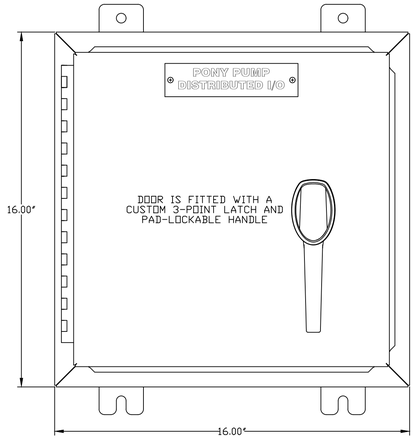

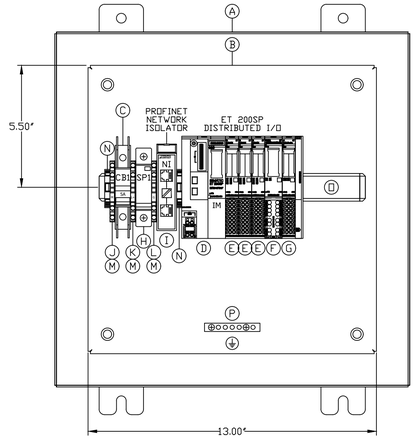

GENERATOR DISTRIBUTED I/O PANEL - BILL of MATERIAL					
ITEM	TAG	PART No.	DESCRIPTION	MANUFACTURER	QTY.
A		SPN4AL-16166-W	ENCLOSURE, NEMA 4X, ALUMINUM, WHITE PAINTED FINISH, 3-PT. LATCH	SCHAEFER	1
B		SPP-1616	BACK PANEL, 12ga. CARBON STEEL, WHITE ENAMEL FINISH	SCHAEFER	1
C	CB1	2907562	CIRCUIT BREAKER, UL489 BRANCH RATED, C-CURVE, 1-POLE, 5A	PHOENIX CONTACT	1
D	IM	6AG1 155-6AA01-7BN0	INTERFACE MODULE, SIPLUS ET200SP IM155-6PN STANDARD	SIEMENS	1
E		6AG1 131-6BF00-7BA0 6AG1 193-6BP00-7DA0	DIGITAL INPUT MODULE, SIPLUS ET200SP DI 8x24VDC ST BASE MODULE, WHITE	SIEMENS SIEMENS	3 3
F		6AG1 132-6HD00-7BB1 6AG1 193-6BP20-7BB1	DIGITAL OUTPUT MODULE, SIPLUS ET200SP RQ 4x120VDC/230VAC/5A ST BASE MODULE, BLACK	SIEMENS SIEMENS	1 1
G		6AG1 134-6GD00-7BA1 6AG1 193-6BP00-7DA0	ANALOG INPUT MODULE, SIPLUS ET200SP AI 4xI 2-/ 4-WIRE ST BASE MODULE, WHITE	SIEMENS SIEMENS	1 1
H	SP1	DS220S-24DC	SURGE PROTECTOR, 24VDC	CITEL	1
I	NI	2313931	PROFINET NETWORK ISOLATOR	PHOENIX CONTACT	1
J	M	2002-1406	TERMINAL, PUSH-IN, 1-CIRCUIT, YELLOW	WAGO	1
K	L+	2002-1404	TERMINAL, PUSH-IN, 1-CIRCUIT, BLUE	WAGO	1
L	G	2002-1407	TERMINAL, PUSH-IN, 1-CIRCUIT, GREEN/YELLOW, GROUNDING	WAGO	1
M		2002-1492	TERMINAL END PLATE, ORANGE	WAGO	3
N		249-116	END ANCHOR, 6mm, GRAY	WAGO	2
O		210-112	DIN RAIL, GALVANIZED, SLOTTED, 2M	WAGO	1
P		PK5GTA	EQUIPMENT GROUND BAR KIT	SQUARE D	1

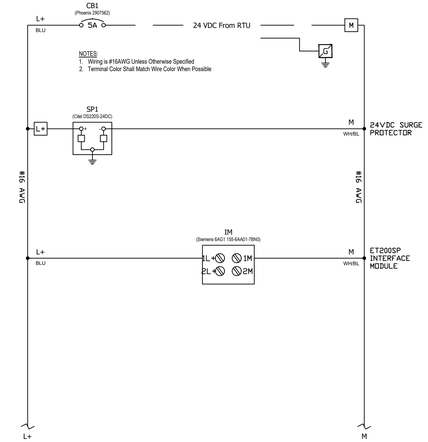

GENERAL NOTES:
1. THIS DRAWING IS AN EXAMPLE OF HOW OVERALL CABINET IS TO BE DESIGNED
2. REFER TO NOTES AND DETAILS ON ALL DRAWING SHEETS
3. ALL FIELD WIRING SHALL BE #18 AWG STRANDED, TIN-PLATED COPPER
4. ALL FIELD WIRING SHALL CONNECT DIRECTLY TO I/O BASE TERMINALS USING FERRULES WITH END SLEEVES
5. ALL PLC I/O WIRING SHALL BE #18 AWG
6. ALL MOUNTING SCREWS SHALL BE DRILLED AND TAPPED (NO SELF-TAPPING SCREWS ARE ALLOWED)
7. ALL MOUNTING SCREWS SHALL BE STAINLESS STEEL
8. DIN RAIL SHALL BE MODEL 1492-DR9 OR EQUIVALENT

CONTROL TERMINAL COLOR:

ORANGE	+12VDC SUPPLY
BROWN	-12VDC SUPPLY
BLUE	+24VDC CONTROL CIRCUITS
YELLOW	-24VDC CONTROL CIRCUITS
GRAY	REMOTELY POWERED CIRCUITS
GREEN/YELLOW	GROUND

ENCLOSURE:

SPN4AL-16166-W (16"H x 16"W x 6"D) NEMA 4X RATED, FABRICATED FROM .125 MARINE GRADE ALUMINUM WITH WHITE POLYESTER POWDER COAT FINISH INSIDE AND OUT. DOOR IS FITTED WITH A CUSTOM 3-POINT LATCH AND PAD-LOCKABLE HANDLE.

BACK PANEL:

SPP-1616 (13"H x 13"W) FABRICATED FROM 12GA. CARBON STEEL WITH WHITE ENAMEL FINISH.

DRAWING LAYER COLOR LEGEND:

GREY	NOTES
BLACK	ELECTRICAL SCHEMATIC WIRING DIAGRAMS AND DEVICES
BLUE	PART IDENTIFICATION
PURPLE	WIRE NUMBERS
GREEN	FIELD DEVICES AND WIRING OUTSIDE ENCLOSURE (DASHED)
RED	FUTURE / OPTIONAL DEVICES AND WIRING
TEAL	DIMENSIONS

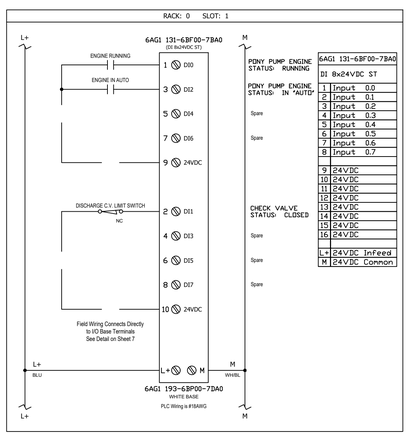

6AG1 131-6BF00-7BA0	
DI 8x24VDC ST	
PONY PUMP ENGINE STATUS: RUNNING	
PONY PUMP ENGINE STATUS: IN "AUTO"	
Spare	
Spare	
CHECK VALVE STATUS: CLOSED	
Spare	
Spare	
Spare	
L+	24VDC Infeed
M	24VDC Connon

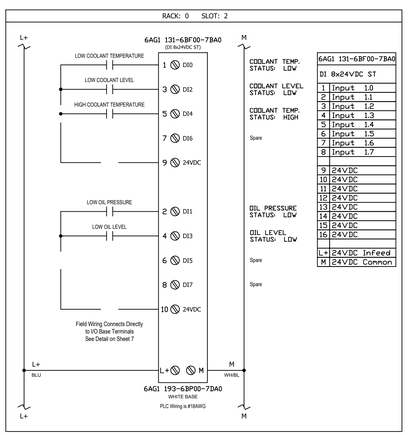

6AG1 131-6BF00-7BA0	
DI 8x24VDC ST	
COOLANT TEMP. STATUS: LOW	
COOLANT LEVEL STATUS: LOW	
COOLANT TEMP. STATUS: HIGH	
Spare	
OIL PRESSURE STATUS: LOW	
OIL LEVEL STATUS: LOW	
Spare	
Spare	
L+	24VDC Infeed
M	24VDC Connon

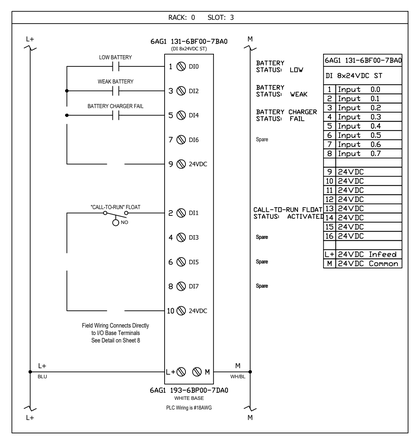

6AG1 131-6BF00-7BA0	
DI 8x24VDC ST	
BATTERY STATUS: LOW	
BATTERY STATUS: WEAK	
BATTERY CHARGER STATUS: FAIL	
Spare	
CALL-TO-RUN FLOAT STATUS: ACTIVATED	
Spare	
Spare	
L+	24VDC Infeed
M	24VDC Connon

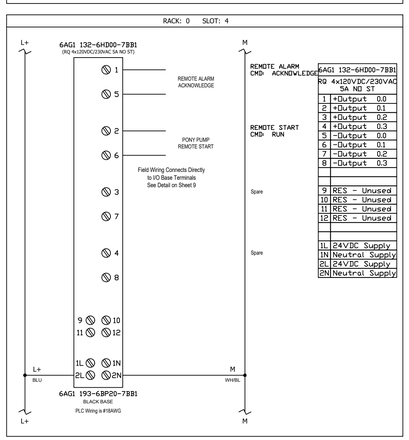

6AG1 132-6HD00-7BB1	
REMOTE ALARM CMD: ACKNOWLEDGE	
RQ 4x120VDC/230VAC 5A NO ST	
1	+Output 0.0
2	+Output 0.1
3	+Output 0.2
4	+Output 0.3
5	-Output 0.0
6	-Output 0.1
7	-Output 0.2
8	-Output 0.3
9	RES - Unused
10	RES - Unused
11	RES - Unused
12	RES - Unused
1L	24VDC Supply
1N	Neutral Supply
2L	24VDC Supply
2N	Neutral Supply

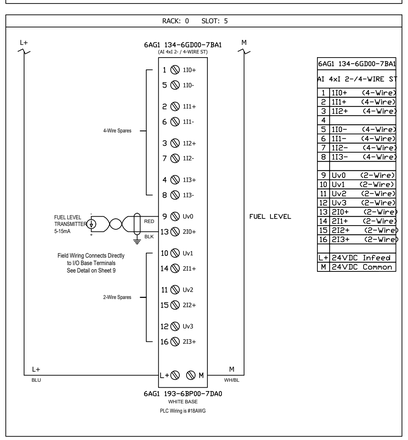

6AG1 134-6GD00-7BA1	
AI 4x1 2-/4-WIRE ST	
1	II0+ (4-Wire)
2	II1+ (4-Wire)
3	II2+ (4-Wire)
4	
5	II0- (4-Wire)
6	II1- (4-Wire)
7	II2- (4-Wire)
8	II3- (4-Wire)
9	Uv0 (2-Wire)
10	Uv1 (2-Wire)
11	Uv2 (2-Wire)
12	Uv3 (2-Wire)
13	2I0+ (2-Wire)
14	2I1+ (2-Wire)
15	2I2+ (2-Wire)
16	2I3+ (2-Wire)
L+	24VDC Infeed
M	24VDC Connon
	FUEL LEVEL

PROFINET CONNECTION DIAGRAM

NOTES:
1. Drop Cable Shall be 3ft. Minimum

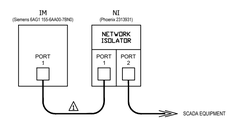

FIELD WIRING CONNECTION DETAILS

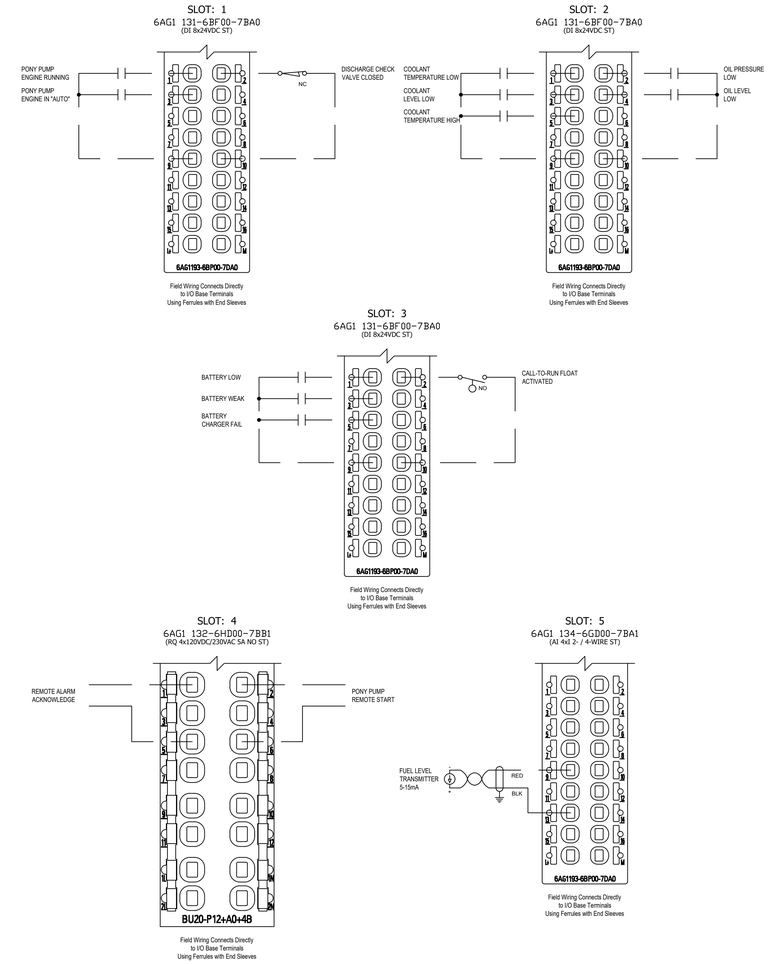

STANDARD

NO.	BY	DATE	REVISIONS
4.			
3.			
2.	LLOYD HENRY	9/25/2018	DRAWING ENLARGED
1.			

DESIGN ENGINEER:
FLORIDA REGISTRATION NO.

DESIGNER:
DRAWN BY:
DATE:
CHECKED BY:
DATE:

JEA Building Community.com

JEA STANDARD
PUMP STATION ELECTRIC DETAILS
PONY PUMP DISTRIBUTED I/O PANEL

NO. SHEETS
SHEET NO.
PROJ. NO.
DATE:
SCALE:
DRAWING NO.

\\corp.jea.com\Root\Services\Shared\AutoCAD\henrlo\Water Standards\2021\JEA_Pump_Station_Standard_ Sheets_Master_61120.dwg Current Layout Tab = 7 - Pony Pump IO Fri Jun 26, 2020 - 07:17

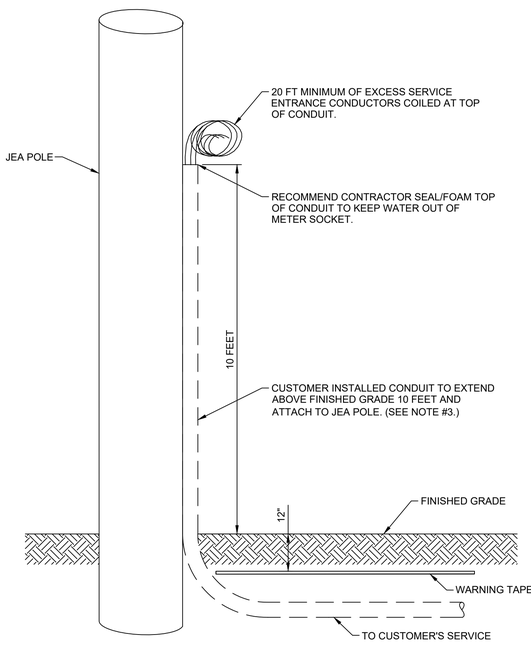

NOTES:

1. 100 AMP MAXIMUM SERVICE SIZE.
2. THE CUSTOMER WILL MAINTAIN THE WARNING TAPE, CONDUIT AND CONDUCTORS SHOWN.
3. THE CUSTOMER MUST PICK A CLEAR SIDE OF THE JEA POLE TO EXTEND UP CONDUIT. CLEAR FROM PHONE OR COMMUNICATION CABLES, OR ANY OTHER EQUIPMENT, FROM FINISHED GRADE TO JEA POINT OF SERVICE. CALL JEA DISTRIBUTION ENGINEER IF LOCATION IS REQUIRED.
4. THE JEA WILL MAKE ALL CONNECTIONS TO CUSTOMER'S SERVICE WIRE ON THE JEA POLE.
5. THE JEA WILL INSTALL CABLE GUARD ON JEA POLE AND COVER CUSTOMER'S SERVICE WIRE AND CONDUIT TO FINISHED GRADE.

COMMERCIAL SERVICE 100AMP MAXIMUM UNDERGROUND SERVICE FROM AN OVERHEAD POLE

NOT TO SCALE

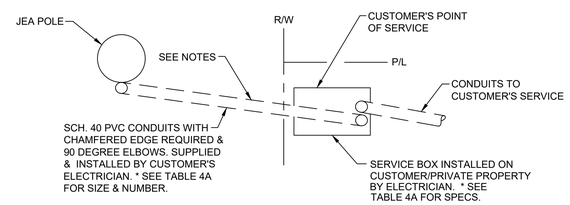

PLAN VIEW

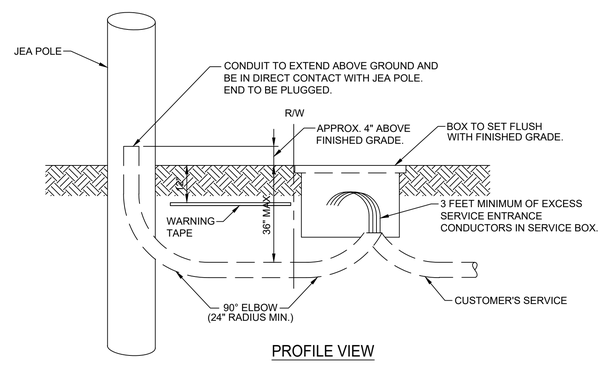

PROFILE VIEW

NOTES:

1. THE MINIMUM DISTANCE BETWEEN THE SERVICE BOX AND SERVICE POLE IS 4 FEET.
2. THE CUSTOMER MUST PICK A CLEAR SIDE OF THE JEA POLE FOR THE JEA TO EXTEND UP THE POLE RISER. CLEAR FROM PHONE OR COMMUNICATION CABLES, OR ANY OTHER EQUIPMENT, FROM FINISHED GRADE TO CONNECTIONS TO OVERHEAD FACILITIES. CALL JEA DISTRIBUTION ENGINEER IF LOCATION IS REQUIRED.
3. THE JEA WILL MAINTAIN THE POLE RISER AND CONDUCTOR FROM THE OVERHEAD FACILITIES TO A CUSTOMER-PROVIDED SERVICE BOX.
4. THE JEA WILL MAKE ALL CONNECTIONS TO THE CUSTOMER'S SERVICE WIRE IN THE SERVICE BOX. SAID CONNECTIONS WILL BE THE CUSTOMER'S POINT OF SERVICE.

COMMERCIAL SERVICE ABOVE 100 AMPS AND MULTI-METERED UNDERGROUND SERVICE FROM AN OVERHEAD POLE

NOT TO SCALE

TABLE 4A

CONDUIT AND SERVICE BOX REQUIREMENTS FOR UNDERGROUND COMMERCIAL SERVICES FROM AN OVERHEAD POLE

SERVICE SIZE	CONDUIT SIZE (From Service Box to JEA Overhead Pole)	SERVICE BOX SIZE
20A - 150A	1-2 in	13" x 24" x 18" d
151A -200A	1-3 in	17" x 30" x 18" d
201A - 399A	1-3 in	24" x 36" x 18" d
400A-800A	400A=1-4 in 401-800A=2-4 in	30" x 48" x 24" d manhole
801A-1400A	801-1000A=2-4 in 1001-1400A=3-4 in	36" x 60" x 36" d manhole

NOTE:

1. ALL CONDUITS TO BE SCHEDULE 40 PVC WITH CHAMFERED EDGES REQUIRED. CONDUIT SIZE AND NUMBER DOES NOT HAVE TO MATCH CUSTOMERS' SERVICE CONDUIT SIZE, TYPE, AND NUMBER.
2. ALL CONDUIT RADIUS TO BE 24 INCH MINIMUM.
3. JEA WILL ALLOW THE OPTION OF PURCHASING THESE BOXES FROM AN ELECTRICAL SUPPLY HOUSE. THESE BOXES MUST MEET THE FOLLOWING SPECIFICATIONS.
4. SERVICE BOX SIZE MAY VARY FOR 3 PHASE APPLICATIONS.
5. CONTACT JEA SERVICE ENGINEER FOR CONDUIT AND BOX LOCATION.

TECHNICAL SPECIFICATIONS

MATERIAL SPECIFICATIONS:

SERVICE BOX

1. TOP: COMPRESSION MOLDED POLYMER CONCRETE WITH MINIMUM THICKNESS OF TWO INCHES.
2. BODY: REINFORCED PLASTIC MORTAR (RPM) CONSISTING OF FIBERGLASS AND ISOPHOLIC RESIN. THE BASE WILL HAVE A FLANGE OF TWO INCHES FROM THE INSIDE WALL.
3. RING: THE RING WILL BE OF POLYMER CONCRETE AND WILL BE PERMANENTLY FUSED TO THE BODY DURING THE CURING PROCESS.

MANHOLE

1. MANHOLE BODY SHALL BE OF ONE PIECE CONSTRUCTION WITH A SOLID COVER.
2. MANHOLE DIMENSIONS SHALL BE 60" L X 36" W X 36"D.

LOAD RATING:

1. LOAD RATING: H-10 (INCIDENTAL TRAFFIC).
2. LOAD RATINGS SHALL BE IN ACCORDANCE WITH ASTM, C-857-87 (STD. PRACTICE FOR MINIMUM STRUCTURAL DESIGN LOADING FOR UG PRECAST CONCRETE UTILITY STRUCTURES) AASHTO AND WESTERN UNDERGROUND COMMITTEE RECOMMENDED GUIDELINES RULE 3.6 DATED 6-15-87.

MISCELLANEOUS REQUIREMENTS:

1. HARDWARE: TWO CAPTIVE STAINLESS PENTA HEAD BOLTS FOR SECURING TOP. BOLT HEADS WILL BE FLUSH WITH TOP OF COVER.
2. IDENTIFICATION: EACH TOP WILL HAVE THE WORD "ELECTRIC" PERMANENTLY MARKED INTO THE TOP.

ELECTRICAL NOTES

1. GROUND WIRE SHALL RUN FROM THE CHASSIS CONTINUOUS THROUGH THE METER CAN TO 2 GROUND RODS SPACED 6 FEET APART AND TERMINATE ON A FENCE POST IN CONCRETE.
2. ELECTRICAL ENCLOSURES SHALL BE ORIENTED SUCH THAT THE FRONT OF THE ENCLOSURE FACES THE INTERIOR OF THE PUMP STATION SITE.
3. QUANTITY AND SIZE OF NEMA 4x 316-STAINLESS STEEL ENCLOSURES AS REQUIRED FOR STATION OPERATION.
4. SERVICE DISCONNECT SHALL BE MANUAL FUSE 3 PHASE-4 WIRE

STANDARD

NO.	BY	DATE	REVISIONS
4.			
3.			
2.			
1.			

DESIGN ENGINEER:
FLORIDA REGISTRATION NO.

DESIGNER:
DRAWN BY:
DATE:
CHECKED BY:
DATE:

JEA Building Community

JEA STANDARD
PUMP STATION ELECTRIC DETAILS
SCADA INSTALLATION

NO. SHEETS
SHEET NO.
DRAWING NO.
PROJ. NO.
DATE:
SCALE:

\\corp.jea.com\Root\Services\Shared\AutoCAD\henrlq\Water Standards\2021\JEA_Pump_Station_Standard_ Sheets_Master_61120.dwg Current Layout Tab = 8 - Service Details Fri Jun 26, 2020 - 07:17

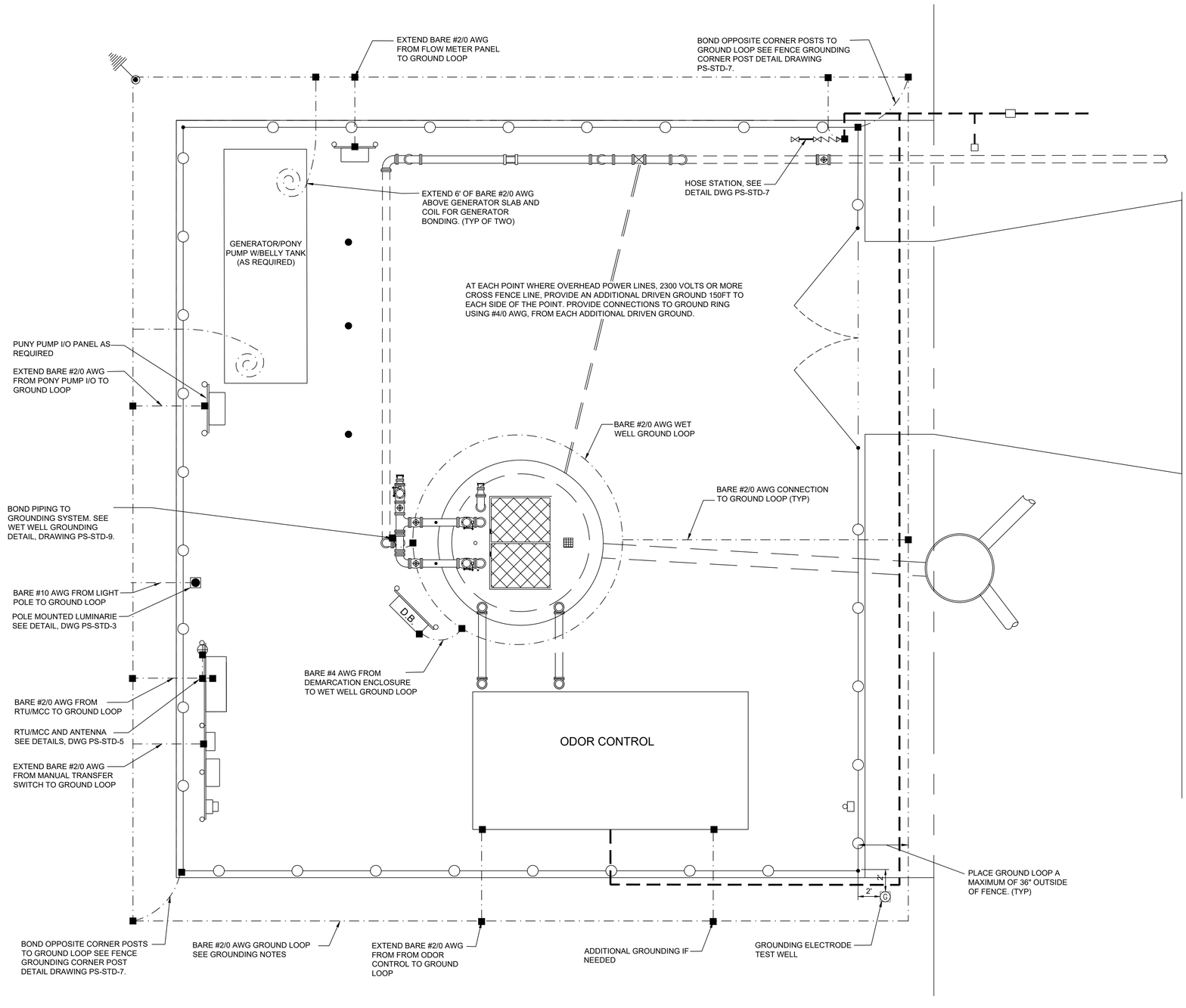

PUMP STATION GROUNDING SITE PLAN

NOT TO SCALE

GROUNDING SYMBOL LEGEND

— · —	GROUND CONDUCTOR (SIZE AS REQUIRED BY NOTES)
■	EXOTHERMIC OR COMPRESSION CONNECTION
	GROUND ROD AND CONNECTION
G	GROUND TEST WELL WITH GROUND ROD
(5')	GROUND CONDUCTOR COILED ABOVE GRADE OR SLAB FOR FUTURE CONNECTION

GROUNDING NOTES:

PROVIDE A COMPLETE ELECTRICAL GROUNDING SYSTEM WITH A MEASURED GROUND RESISTANCE OF 5 OHMS OR LESS.

GROUNDING COMPONENTS AND MATERIALS SHALL BE NEW AND UNDAMAGED.

INSULATED GROUND CONDUCTOR SHALL BE SOFT DRAWN, TIN PLATED, STRANDED COPPER CONFORMING TO THE REQUIREMENTS OF UL 83. INSULATED GROUND CONDUCTOR SHALL BE TYPE TW OR THW, AND GREEN COLORED INSULATION. MINIMUM SIZE FOR INSULATED GROUND CONDUCTORS, REGARDLESS OF APPLICATION SHALL BE #12 AWG.

BURIED GROUND LOOP CONDUCTORS

A. GROUND LOOP CONDUCTOR SHALL BE BARE #2/0 AWG, SOFT DRAWN, TIN PLATED STRANDED COPPER CONDUCTOR UNLESS OTHERWISE NOTED.

B. BARE GROUND CONDUCTORS BELOW GRADE, SHALL HAVE A MINIMUM OF 18 INCHES AND A MAXIMUM OF 30 INCHES COVER FROM FINISHED GRADE. BARE GROUND CONDUCTORS UNDER FOUNDATIONS OR SLABS, SHALL HAVE A MINIMUM OF 6 INCHES OF EARTH COVER BETWEEN THE TOP OF CONDUCTOR CONDUCTOR AND THE FOUNDATION OR SLAB.

C. BARE GROUND CONDUCTORS THAT PENETRATE THROUGH EXPOSED SLABS OR WET WELL WALL, SHALL DO SO THROUGH A 3/4" x 12" (MIN), SCHED 40 PVC SLEEVE. WITH GROUND WIRE CENTERED IN SLEEVE, FILL TOP OF SLEEVE WITH APPROVED SEALANT TO A DEPTH AT LEAST 3 TIMES THE OUTSIDE DIAMETER OF THE SLEEVE. ALL WIRES PROTRUDING TO THE SURFACE SHALL BE TIN PLATED.

D. BARE GROUND CONDUCTOR SHALL BE DIRECTLY BURIED IN EARTH; TO WITHIN 24 TO 36 INCHES FROM BASE OF STRUCTURES OR EQUIPMENT IDENTIFIED FOR GROUNDING.

GROUND RODS

A. SHALL BE COPPER CLAD MIN 13MIL, COLD DRAWN CARBON STEEL MANUFACTURED IN ACCORDANCE WITH UL 467, WITH THE COPPER CLADDING BONDED TO THE STEEL ROD BY ELECTROLYTIC, OR MOLTEN WELDING PROCESS. GROUND RODS SHALL HAVE A CONICAL TAPER ON PENETRATING END. EACH GROUND ROD SHALL BE 10-FOOT BY 3/4 INCH DIAMETER SECTIONS.

B. THERE SHALL BE A MINIMUM OF 2 GROUND RODS THAT SHALL BE DRIVEN TO A MINIMUM OF 60FT EACH. IF GROUND RODS ARE UNABLE TO BE DRIVEN 60FT OR 5 OHMS IS NOT ACHIEVED THEN ADDITIONAL GROUND RODS MUST BE DRIVEN TILL THE 5 OHMS IS REACHED. IF AN ADDITIONAL GROUND ROD IS REQUIRED IT MUST BE DRIVEN IN A CORNER THAT DOESN'T HAVE A ROD.

C. GROUND RODS SHALL BE CONNECTED BY COMPRESSION COUPLINGS, SCREW COUPLINGS WILL NOT BE ACCEPTED.

5. GROUNDING SYSTEM HARDWARE

A. GROUNDING SYSTEM HARDWARE, INCLUDING CLAMPS, CONNECTORS, BOLTS, WASHERS, AND NUTS, SHALL BE TIN PLATED COPPER.

B. SPLICES, JOINTS, AND CONNECTIONS BELOW GRADE SHALL BE EXOTHERMIC OR IRREVERSIBLE COMPRESSION TYPE. THREADED OR BOLTED COUPLINGS ARE NOT ACCEPTABLE EXCEPT WHERE NOTED IN GROUNDING DETAILS.

C. PREPARE CONDUCTORS AND CONNECTORS PER MANUFACTURERS REQUIREMENTS. REMAKE CONNECTIONS THAT FAIL MANUFACTURER'S RECOMMENDED TESTS.

D. GROUNDING CONNECTIONS SHALL ENCOMPASS 100 PERCENT OF THE GROUND CONDUCTOR AND CONDUCTOR ENDS.

E. GROUND LUGS SHALL BE SINGLE OR TWO-HOLE, HEAVY-DUTY, TIN PLATED COPPER BARS CONFORMING TO THE REQUIREMENTS OF IEEE 837 AND UL 467. TWO-HOLE GROUND LUGS SHALL HAVE NEMA CENTERLINE HOLE SPACING. GROUND LUGS USING AN EXOTHERMIC PROCESS SHALL BE SIMILAR TO TYPE LA AS MANUFACTURED BY ERICO.

F. MAKE CABLE CONNECTIONS TO BUS BARS USING HIGH-COMPRESSION LUGS. GROUND LUGS USED WITH THE COMPRESSION PROCESS SHALL BE TYPE YGHA AS MANUFACTURED BY BURNDY ELECTRICAL.

6. BOND PIPING TO GROUNDING SYSTEM VIA CONNECTION AT THE LAST FLANGE BEFORE PIPES RETURN UNDERGROUND. SEE WET WELL GROUNDING DETAIL.

7. GROUNDING BY USE OF ANCHOR BOLTS, AGAINST GASKETS, ON PAINTED OR VARNISHED SURFACES, OR ON BOLTS HOLDING REMOVABLE ACCESS COVERS WILL NOT BE ACCEPTABLE.

8. GROUND RESISTANCE SHALL BE CERTIFIED BY AN INDEPENDENT GROUNDING SYSTEM TESTING ORGANIZATION. TESTING SHALL BE DONE AT EACH TEST WELL USING THE 3-POINT FALL OF POTENTIAL METHOD. THIS DOCUMENT MUST BE SUBMITTED AT THE TIME OF STARTUP FOR FINAL ACCEPTANCE.

9. NO CHEMICALS SHALL BE USED TO REDUCE THE RESISTANCE UNLESS APPROVED BY JEA.

10 A MINIMUM OF 5 OHMS OF SHALL BE GUARANTEED BY THE CONTRACTOR FOR 3 YEARS FROM THE SITES ACCEPTANCE. IF THE RESISTANCE FAILS IN THIS TIME THE CONTRACTOR WILL BE RESPONSIBLE FOR ADDING ADDITIONAL GROUND RODS AT THE CONTRACTORS EXPENSE.

STANDARD

NO.	BY	DATE	REVISIONS
4.			
3.			
2.			
1.	LLOYD HENRY	9/25/2018	DRAWING UPDATED

DESIGN ENGINEER:
FLORIDA REGISTRATION NO.

DESIGNER:
DRAWN BY:
DATE:
CHECKED BY:
DATE:

JEA Building Community.com

JEA STANDARD
PUMP STATION ELECTRIC DETAILS
GROUNDING PLAN

PROJ. NO.
DATE:
SCALE:

NO. SHEETS
SHEET NO.
DRAWING NO.

\\corp.jea.com\Root\Services\Shared\AutoCAD\henrla\Water Standards\2021\JEA_Pump_Station_Standard_ Sheets_Master_61120.dwg Current Layout Tab = 9 – Grounding Plan Fri Jun 26, 2020 – 07:17

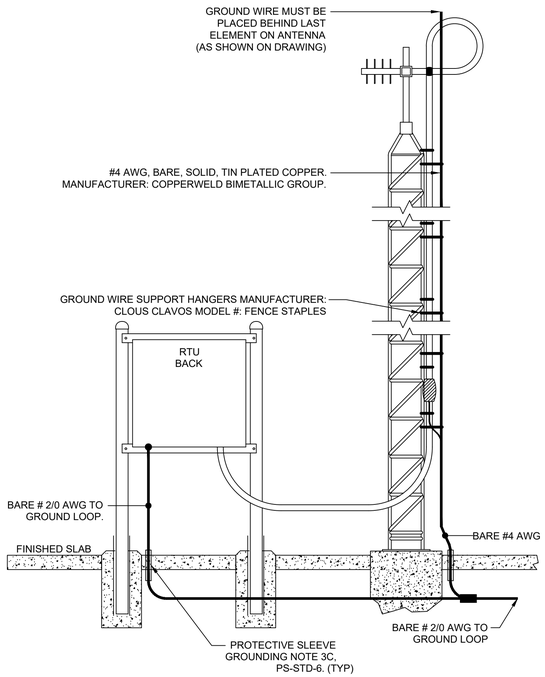

ALTERNATE ANTENNA - GROUNDING DETAIL

FOR POLE HEIGHTS 20 FEET AND ABOVE
NOT TO SCALE

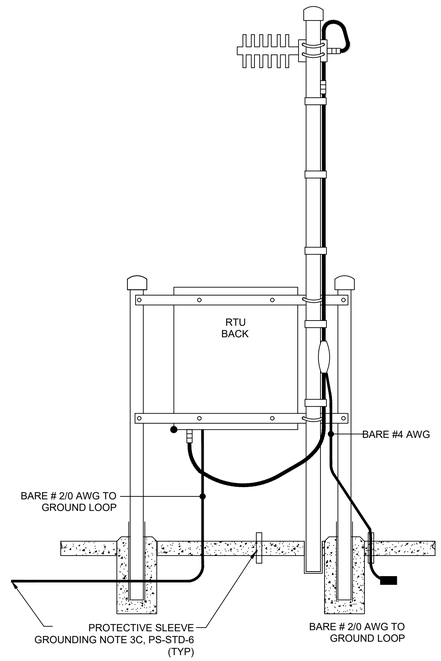

STANDARD ANTENNA - GROUNDING DETAIL

NOT TO SCALE

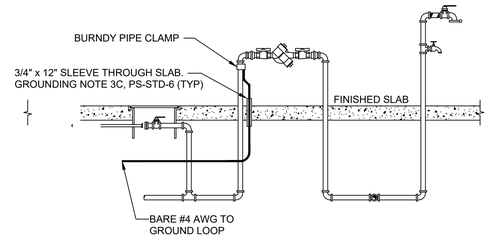

HOSE STATION GROUNDING DETAIL

NOT TO SCALE

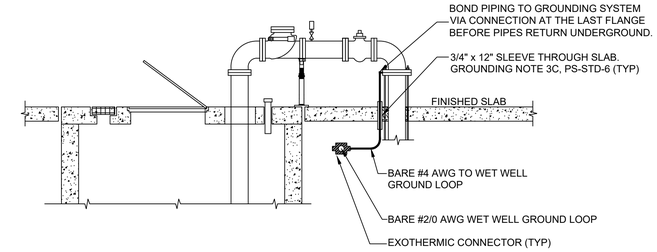

WETWELL GROUNDING DETAIL

NOT TO SCALE

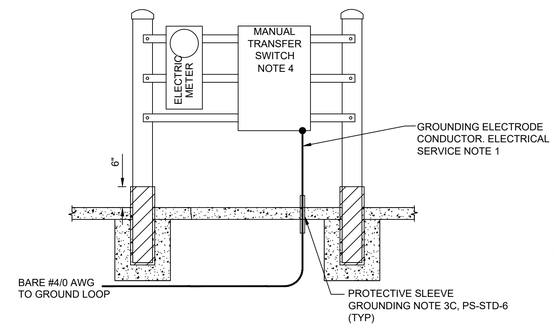

MANUAL TRANSFER SWITCH GROUNDING DETAIL

NOT TO SCALE

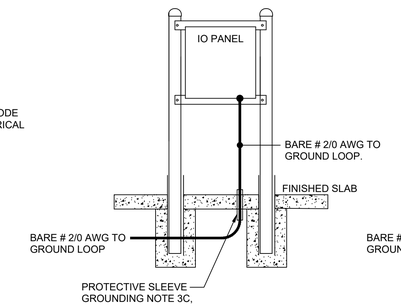

PONY PUMP I/O GROUNDING DETAIL

NOT TO SCALE

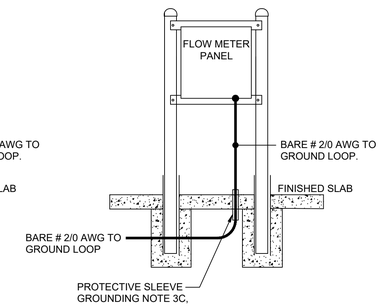

FLOW METER GROUNDING DETAIL

NOT TO SCALE

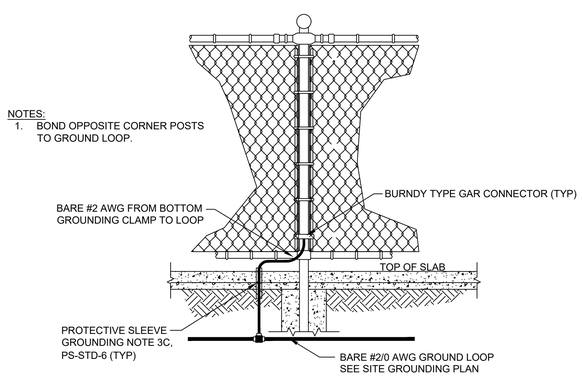

FENCE GROUNDING CORNER POST DETAIL

NOT TO SCALE

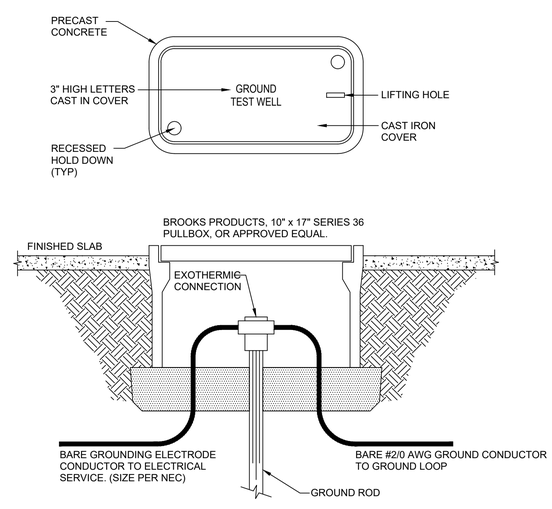

GROUND SYSTEM TEST WELL DETAIL

NOT TO SCALE

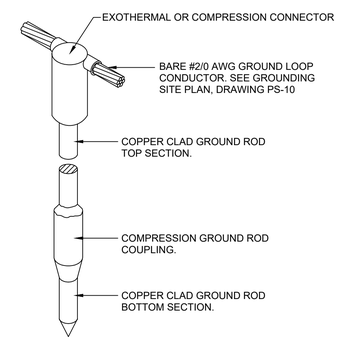

TYPICAL GROUND ROD & CONNECTION DETAIL

NOT TO SCALE

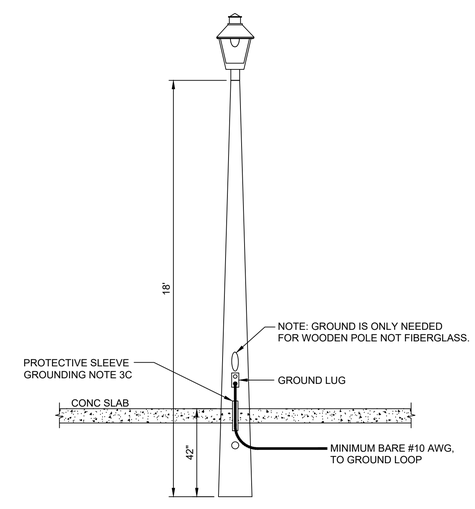

SITE LIGHT GROUNDING DETAIL

NOT TO SCALE

STANDARD

NO.	BY	DATE	REVISIONS
4.			
3.			
2.			
1.	LLOYD HENRY	9/25/2018	MANUAL TRANSFER SWITCH

DESIGN ENGINEER:
FLORIDA REGISTRATION NO.

DESIGNER:
DRAWN BY:
DATE:
CHECKED BY:
DATE:

JEA Building Community.com

JEA STANDARD
PUMP STATION ELECTRIC DETAILS
GROUNDING DETAILS

PROJ. NO.
DATE:
SCALE:
NO. SHEETS
SHEET NO.
DRAWING NO.

\\corp.jea.com\Root\Services\Shared\AutoCAD\henrig\Water Standards\2021\JEA_Pump_Station_Standard_ Sheets_Master_61120.dwg Current Layout Tab = 10 - Grounding Details Fri Jun 26, 2020 - 07:17

EXTEND THE UNDERGROUND SERVICE CONDUIT TO THE SERVICE POINT OF CONNECTION, AS DESIGNATED BY THE ELECTRIC UTILITY COMPANY, AND TERMINATE IN ACCORDANCE WITH THE ELECTRIC UTILITY COMPANY REQUIREMENTS. PROVIDE SERVICE RISER UP POLE, SERVICE CONNECTION BOX AT BASE OF POLE, PAD MOUNTED TRANSFORMER SERVICE CONNECTION, ETC. AS REQUIRED BY THE ELECTRIC UTILITY COMPANY.

SERVICE CONDUIT SHALL BE MINIMUM 3" FOR SERVICES UP TO 200 AMPS, MINIMUM 4" FOR SERVICES UP TO 400 AMPS, AND MINIMUM (2) 4" FOR SERVICES UP TO 800 AMPS. SERVICE CONDUIT SHALL BE SCHEDULE 80 PVC. SERVICE CONDUCTORS SHALL BE TYPE XHHW-2 COPPER. MINIMUM AMPACITY SHALL BE PER NEC REQUIREMENTS.

PROVIDE GROUNDING ELECTRODE SYSTEM PER NEC AND LOCAL INSPECTION AUTHORITY REQUIREMENTS. THE GROUNDING ELECTRODE SYSTEM SHALL INCLUDE A MINIMUM OF TWO GROUND RODS, NOT LESS THAN 6 FEET APART. THE GROUNDING ELECTRODE CONDUCTOR SHALL BE CONTINUOUS FROM THE METER CAN TO EACH GROUND ROD AND SHALL TERMINATE ON A FENCE POST EMBEDDED IN CONCRETE.

THE ELECTRICAL SERVICE MINIMUM LOAD RATING: LARGEST PUMP BREAKER AMPS + ALL OTHER PUMP FULL LOAD AMPS + 10A CONTROLS + 5 KVA POWER DISTRIBUTION PANEL + GENERATOR ACCESSORY PANEL (STATIONS WITH STANDBY GENERATOR) + ALL OTHER STATION LOADS.

THE ELECTRICAL SERVICE MANUAL TRANSFER SWITCH RATING SHALL BE MINIMUM 100A. WHERE THE MINIMUM ELECTRICAL SERVICE RATING EXCEEDS 100A, THE MAIN SERVICE DISCONNECT RATING SHALL BE 200A, 400A OR LARGER AS DETERMINED BY THE PUMP STATION ELECTRICAL DESIGN ENGINEER.

SELF CONTAINED OR CT METERING IN ACCORDANCE WITH THE ELECTRICAL UTILITY COMPANY REQUIREMENTS. METER ENCLOSURES AND CT CABINETS SHALL BE ALUMINUM.

GROUND METERING IN ACCORDANCE WITH NEC AND LOCAL INSPECTION AUTHORITY REQUIREMENTS.

MANUAL TRANSFER SWITCH SHALL BE SERVICE ENTRANCE RATED FUSED DISCONNECT SWITCH WITH TYPE 316 NEMA 4X ENCLOSURE.

POWER DISTRIBUTION PANEL

MAIN 2P

SEE SHEET PS-STD-3 FOR ADDITIONAL INFORMATION

SPD

SURGE PROTECTIVE DEVICE
UL 1449 THIRD (LATEST) EDITION
MINIMUM 50kA 8X20us PER MODE
INDIVIDUALLY FUSED & THERMALLY PROTECTED MOVs
NEMA 4X ENCLOSURE

ELECTRICAL SERVICE AMPACITY SHALL BE BASED ON 100% OF THE MANUAL TRANSFER SWITCH RATING. CONDUIT SHALL BE SCH 80 PVC (2" MIN).

POWER DISTRIBUTION PANEL FEEDER TAP AMPACITY PER NEC. CONDUIT SHALL BE SCH 80 PVC (1" MIN).

THE CONTROL PANEL MINIMUM LOAD RATING: LARGEST PUMP BREAKER AMPS + ALL OTHER PUMP FULL LOAD AMPS + 10A CONTROLS + ALL OTHER CONTROL PANEL LOADS.

THE CONTROL PANEL MCB RATING SHALL BE MINIMUM 100A. WHERE THE CONTROL PANEL MINIMUM LOAD RATING EXCEEDS 100A, THE MCB RATING SHALL BE 200A, 400A OR LARGER AS DETERMINED BY THE PUMP STATION ELECTRICAL DESIGN ENGINEER.

FOR STATIONS WITH STANDBY GENERATORS, THE CONTROL PANEL MCB SHALL NOT BE LESS THAN THE GENERATOR MAIN BREAKER.

ATS

AUTOMATIC TRANSFER SWITCH WITH NEMA 4X TYPE 316SS ENCLOSURE (STATIONS WITH GENERATOR) OR NEMA 4X TYPE 316SS PULL BOX WITH POWER DISTRIBUTION TERMINAL BLOCKS (STATIONS W/O GENERATOR)

GENERATOR ACCESSORY POWER FEEDER TAP AMPACITY PER NEC AND SHALL BE A MINIMUM OF 125% OF THE GENERATOR ACCESSORY POWER DISCONNECT RATING. CONDUIT SHALL BE SCH 80 PVC (1" MIN.)

PUMP STATION CONTROL PANEL FEEDER AMPACITY SHALL BE BASED ON 100% OF THE MANUAL TRANSFER SWITCH RATING. CONDUIT SHALL BE SCH 80 PVC (2" MIN).

GENERATOR ACCESSORY POWER DISCONNECT SWITCH WITH TYPE 316 NEMA 4X ENCLOSURE. FUSES SHALL BE SIZED PER NEC BASED ON MAXIMUM ACCESSORY POWER LOAD REQUIREMENTS.

GENERATOR ACCESSORY POWER FEEDER AMPACITY SHALL BE BASED ON 125% OF THE GENERATOR ACCESSORY POWER DISCONNECT RATING. CONDUIT SHALL BE SCH 80 PVC (1" MIN.).

1" SCH 80 PVC

GEN KW

GCB

ACCESSORY PANEL

LT

FUEL STORAGE TANK

GENERATOR POWER FEEDER AMPACITY SHALL BE BASED ON 125% OF THE GENERATOR MAIN BREAKER. CONDUIT SHALL BE SCH 80 PVC (2" MIN.).

1" SCH 80 PVC CONDUIT WITH 3#12 AUTO START/STOP AND 4#14 FOR GENERATOR RUNNING AND FAULT SIGNALS

THE STANDBY GENERATOR SET, FUEL STORAGE TANK AND AUTOMATIC TRANSFER SWITCH SHALL BE FURNISHED IN ACCORDANCE WITH THE JEA SUPPLIER AGREEMENT FROM RING POWER SYSTEMS, INC., AND SHALL INCLUDE ALL JEA STANDARD ACCESSORIES.

THE GENERATOR CONTROL PANEL SHALL INCLUDE "GENERATOR RUNNING" AND "GENERATOR TROUBLE" DRY CONTACTS FOR REMOTE MONITORING FROM THE RTU. THE GENERATOR TROUBLE CONTACT SHALL MONITOR ALL WARNING AND SHUTDOWN CONDITIONS, INCLUDING "NOT IN AUTO".

THE FUEL STORAGE TANK SHALL BE EQUIPPED WITH A SOLAR POWERED ELECTRONIC LEVEL MONITOR (SOLAR GAUGE MODEL EFG-8000-1) WITH ANALOG TANK LEVEL OPTION (FGC-420.1). THE LEVEL MONITORING SYSTEM SHALL INCLUDE MODIFICATIONS TO THE GENERATOR CONTROL PANEL TO ACCOMMODATE THE INSTALLATION OF THE FUEL SIGNAL DATA CONVERTER. THE LEVEL MONITORING SYSTEM SHALL PROVIDE LOCAL "OVERFILL HIGH LEVEL ALARM"; "LOW LEVEL ALARM" AND "LEAK ALARM" SIGNALS MONITORED BY THE GENERATOR CONTROL PANEL; AND 4-20mA TANK LEVEL SIGNAL MONITORED FROM THE RTU.

THE AUTOMATIC TRANSFER SWITCH SHALL INCLUDE "ATS IN NORMAL", "ATS IN EMERGENCY", "NORMAL SOURCE AVAILABLE" AND "EMERGENCY SOURCE AVAILABLE" DRY CONTACTS FOR REMOTE MONITORING FROM THE RTU.

ELECTRICAL SERVICE

STANDBY GENERATOR

FUEL STORAGE TANK

PUMP STATION CONTROL PANEL

MCB 3P

SPD

3A 2P

CPT

CONTROLS

PCB 3P

TYPE SIZE

PCB 3P

TYPE SIZE

PCB 3P

TYPE SIZE

WIRE SIZE MINIMUM 140% MOTOR FULL LOAD AMPS.

BREAKER MINIMUM 200% MOTOR FULL LOAD AMPS.

WIRE SIZE MINIMUM 140% MOTOR FULL LOAD AMPS.

FOR VFD APPLICATIONS THE PCB SHALL BE THE VFD MANUFACTURER MAXIMUM RECOMMENDATION. EACH VFD SHALL BE EQUIPPED WITH A MINIMUM 3% INPUT LINE REACTOR AND DVDT OUTPUT FILTER.

WIRE SIZE MINIMUM 125% MOTOR FULL LOAD AMPS. FOR VFD APPLICATIONS USE VFD CABLE. CONDUIT SHALL BE SCH 80 PVC (2" MIN.).

DEMARCATION BOX

FOR CLASS THREE AND FOUR PUMP STATIONS PROVIDE ONE DEMARCATION BOX FOR TWO PUMPS, AND A SECOND DEMARCATION BOX FOR THE THIRD PUMP. FOR PUMPS EQUIPPED WITH TWO OR MORE POWER CABLES, PROVIDE A DEMARCATION BOX FOR EACH PUMP.

WET WELL CONDUIT SHALL BE SCH 80 PVC, MAXIMUM 31% FILL (2" MIN.).

LS PUMP OFF

LS PUMP ON

LS HIGH ALARM

FLOAT SWITCHES

LT

LEVEL TRANSDUCER

T M HP No.1

T M HP No.2

T M HP No.3

SUBMERSIBLE PUMPS

ELECTRIC SINGLE LINE DETAIL DIGRAM

STANDARD

NO.	BY	DATE	REVISIONS
4.			
3.			
2.			
1.	LLOYD HENRY	9/25/2018	TITLE ADDED

DESIGN ENGINEER:

FLORIDA REGISTRATION NO.

DESIGNER:
DRAWN BY:
DATE:
CHECKED BY:
DATE:

JEA Building Community

JEA STANDARD
PUMP STATION ELECTRIC DETAILS
ELECTRIC SINGLE LINE DIAGRAM

PROJ. NO.
DATE:
SCALE:

NO. SHEETS
SHEET NO.
DRAWING NO.

\\corp.jea.com\Root\Services\Shared\AutoCAD\henrlq\Water Standards\2021\JEA_Pump_Station_Standard_ Sheets_Master_61120.dwg Current Layout Tab = 11 - One Line Diagram Fri Jun 26, 2020 - 07:17