JEA Water & Wastewater Standards Manual

Volume II: Distribution and Collection Details

January 1, 2021 – Edition

"Foundation for the Future – Water & Wastewater Standards"

Table of Contents

WATER AND RECLAIMED WATER

SECTION I - WATER AND RECLAIMED WATER DETAILS

WATER AND RECLAIMED METERS AND SERVICES

SERVICE INSTALLATIONS 2" & SMALLER - PLATE W-1 8
WATER SERVICE DETAIL - 2" & SMALLER METER - PLATE W-2 9
WATER METER BOX & COVER FOR 1" AND SMALLER METERS - PLATE W-3 10
WATER METER BOX POLYMER COVER MODEL No. 37 - TWO HOLE - PLATE W-3A 11
WATER METER BOX POLYMER COVER MODEL No. 37 - ONE HOLE - PLATE W-3B 12
WATER METER BOX & COVER FOR 1-1/2" AND 2" METERS - PLATE W-4 13
WATER METER BOX POLYMER CONCRETE COVER MODEL No. 65 - TWO HOLE - PLATE W-4A 14
LARGE WATER METER INSTALLATIONS - PLATE W-5 15
WATER METER INSTALLATION DETAILS 3" - 20" METERS - PLATE W-6 16
36" x 60" x 48" CO-POLYMER WATER METER BOX 3" & 4" METERS - PLATE W-7 17
48" x 72" x 48" CO-POLYMER WATER METER BOX 4" & 6" METERS - PLATE W-7A 18
48" x 96" x 48" CO-POLYMER WATER METER BOX 6" - 20" METERS - PLATE W-7B 19
WATER METER BOX DIMENSIONS 3" - 20" METERS - PLATE W-8 20
WATER SERVICE MANIFOLD ARRANGEMENT - PLATE W-9 21
RECLAIM CROSS CONNECTION CONTROL DEVICE - PLATE W-15 22
WATER CROSS CONNECTION CONTROL DEVICE - PLATE W-15A 23

FIRE HYDRANTS

FIRE HYDRANT INSTALLATION USING TAPPING SLEEVE & VALVE - PLATE W-12 24
FIRE HYDRANT INSTALLATION USING MECHANICAL JOINT TEE - PLATE W-13 25
FIRE HYDRANT INSTALLATION LIMITED SPACE - PLATE W-14 26

WATER AND RECLAIMED PIPING

PIPE INSTALLATION

OPEN CUT TRENCH FOR PRESSURE PIPE - PLATE W-42 27
OPEN CUT TRENCH FOR PRESSURE PIPE - PLATE W-42A 28
FUSIBLE PVC PIPE ALLOWABLE BEND RADIUS AND PULLING FORCE - PLATE W-43 29
DUAL DIRECTIONAL DRILLING - PLATE W-43A 30

RESTRAINTS

PVC PIPE RESTRAINT JOINT SCHEDULE - PLATE W-31A 31
DUCTILE IRON PIPE RESTRAINT JOINT SCHEDULE - PLATE W-31B 32
MECHANICAL RESTRAINT DETAILS - I - PLATE W-31C 33
MECHANICAL RESTRAINT DETAILS - II - PLATE W-31D 34
PLUGGED DEAD END USING TIE RODS - PLATE W-36 35
PLUGGED DEAD END USING MECHANICAL RESTRAINTS - PLATE W-37 36
THRUST BLOCK SIZE CHART - PLATE W-38 37

SEPARATION REQUIREMENTS
SEPARATION REQUIREMENTS FOR WATER, WASTEWATER AND RECLAIMED WATER MAINS - PLATE W-10 38
NOTES ON UTILITY SEPARATION REQUIREMENTS - PLATE W-11 39
ADJUSTMENTS OVER / UNDER UTILITIES
ADJUSTMENT OVER EXISTING UTILITIES MECHANICAL RESTRAINTS - PLATE W-32 40
ADJUSTMENT OVER EXISTING UTILITIES TIE RODS - PLATE W-33 41
ADJUSTMENT UNDER EXISTING UTILITIES MECHANICAL RESTRAINTS - PLATE W-34 42
ADJUSTMENT UNDER EXISTING UTILITIES TIE RODS - PLATE W-35 43
ADJUSTMENT UNDER EXISTING UTILITIES PIPE JOINT DEFLECTION - PLATE W-40 44
ADJUSTMENT OVER EXISTING UTILITIES PIPE JOINT DEFLECTION - PLATE W-41 45
CASING DETAILS
TYPICAL CASING DETAIL - WATER - PLATE W-30 46
TYPICAL SPLIT CASING DETAIL - WATER - PLATE W-30A 47
PIPE SUPPORTS AND HANGERS
BRIDGE DECK PIPE HANGER DETAIL - PLATE W-20 48
SIDEWALL PIPE HANGER DETAIL - PLATE W-21 49
PIPE SUPPORT & POLE ASSEMBLY FOR WATER MAIN - PLATE W-22 50
PIPE SUPPORT DETAILS FOR POLE ASSEMBLY - PLATE W-23 51
SAMPLE TAPS, FLUSHING, SWABBING
TEMPORARY SAMPLE TAP ALTERNATIVE METHOD A - PLATE W-24 52
TEMPORARY SAMPLE TAP ALTERNATIVE METHOD B - PLATE W-24A 53
TEMPORARY SAMPLE TAP - PLATE W-25 54
2" TEMPORARY SAMPLE TAP FOR STUB OUT - PLATE W-26 55
TEMPORARY SAMPLE TAP FOR IN-SERVICE MAINS - PLATE W-27 56
FLUSHING VALVE BELOW GRADE - PLATE W-28 57
SWABBING PORT AND CLEAN OUT VAULT DETAIL - SECTION - PLATE W-45 58
SWABBING PORT AND CLEAN OUT VAULT DETAIL - PLAN - PLATE W-45A 59
SWABBING LAUNCHING STATION DETAIL FOR NEW WATER MAIN UP TO 24" - PLATE W-45B 60
SWABBING PIG LAUNCHING STATION DETAIL FOR WATER MAINS UP TO 24" - PLAN - PLATE W-45C 61
RETROFIT SWABBING LAUNCHING STATION DETAIL FOR WATER MAINS UP TO 24" - SECTION - PLATE W-45D . 62
LOCATE WIRE
LOCATE WIRE CONSTRUCTION FOR WATER MAINS - PLATE W-44 63
LOCATE WIRE FOR BRANCH MAIN - PLATE W-44A 64
LOCATE WIRE BOX - PLATE W-44B 65
WATER AND RECLAIMED VALVES
WATER SYSTEM VALVE BOX COVER - PLATE W-16 66
WATER SYSTEM VALVE BOX - PLATE W-17 67
WATER VALVE INSTALLATION DETAIL - PLATE W-18 68
WATER VALVE JACKET ADJUSTED TO ROADWAY AFTER RE-SURFACING - PLATE W-19 69

SECTION II – RECLAIMED WATER DELIVERY STATION DETAILS

SITE PLAN & PIPING LAYOUT 70
ELECTRICAL SCHEMATIC 1 71
ELECTRICAL SCHEMATIC 2 72
GROUNDING PLAN 73
ELECTRICAL DETAIL 74

WASTEWATER

SECTION III – WASTEWATER DETAILS

MANHOLES

SANITARY SEWER MANHOLE FRAME AND COVER - PLATE S-1 75
SANITARY SEWER CONCRETE TYPE "A" MANHOLE 8"-21" SEWERS - PLATE S-2 76
SANITARY SEWER POLYMER TYPE "A" MANHOLE 8"-21" SEWERS - PLATE S-2A 77
MICRO-TUNNELING WORK SHAFT - PLATE S-2B 78
TYPE “A” MANHOLE PLAN VIEW - PLATE S-3 79
SANITARY SEWER CONCRETE TYPE "B" MANHOLE 8"-10" SEWERS - PLATE S-4 80
SANITARY SEWER POLYMER TYPE "B" MANHOLE 8"-10" SEWERS - PLATE S-4A 81
TYPE “B” MANHOLE PLAN VIEW - PLATE S-5 82
SANITARY SEWER CONCRETE TYPE "C" MANHOLE 8"-21" SEWERS - PLATE S-6 83
SANITARY SEWER POLYMER TYPE "C" MANHOLE 8"-21" SEWERS - PLATE S-6A 84
SANITARY SEWER CONCRETE TYPE "D" MANHOLE 12"-21" SEWERS - PLATE S-7 85
SANITARY SEWER POLYMER TYPE "D" MANHOLE 12"-21" SEWERS - PLATE S-7A 86
TYPE “D” MANHOLE PLAN VIEW - PLATE S-8 87
SANITARY SEWER CONCRETE TYPE "E" MANHOLE THRU STORM WATER MANHOLE - PLATE S-9 88
SANITARY SEWER POLYMER TYPE "E" MANHOLE THRU STORM WATER MANHOLE - PLATE S-9A 89
SANITARY SEWER CONCRETE TYPE "F" MANHOLE 12" - 21" SEWERS - PLATE S-10 90
SANITARY SEWER POLYMER TYPE "F" MANHOLE 12" - 21" SEWERS - PLATE S-10A 91
SANITARY SEWER CONCRETE TYPE "G" MANHOLE 24" - 60" SEWERS - PLATE S-11 92
SANITARY SEWER POLYMER TYPE "G" MANHOLE 24" - 60" SEWERS - PLATE S-11A 93
SANITARY SEWER CONCRETE TYPE "H" MANHOLE 24" - 60" SEWERS - PLATE S-12 94
SANITARY SEWER POLYMER TYPE "H" MANHOLE 24" - 60" SEWERS - PLATE S-12A 95
SANITARY SEWER CONCRETE TYPE "I" MANHOLE 24" - 60" SEWERS - PLATE S-13 96
SANITARY SEWER POLYMER TYPE "I" MANHOLE 24" - 60" SEWERS - PLATE S-13A 97
FIBERGLASS MANHOLE - PLATE S-14 98
POLYMER "DOG HOUSE" MANHOLE - PLATE S-14A 99
POLYMER REHAB BASE AND RISER MANHOLE - PLATE S-14B 100
CONCRETE MANHOLE PIPE CONNECTION DETAIL - PLATE S-15 101
POLYMER MANHOLE PIPE CONNECTION DETAIL - PLATE S-15A 102
MISCELLANEOUS MANHOLE CONNECTIONS - PLATE S-16 103
PRECAST CONCRETE SEWER MANHOLE JOINT DETAIL - PLATE S-17 104

PRECAST POLYMER SEWER MANHOLE JOINT DETAIL - PLATE S-17A 105
TYPICAL FORCE MAIN CONNECTION TO MANHOLE - PLATE S-18 106
MANHOLE FRAME AND COVER ADJUSTMENT AFTER ROADWAY RE-SURFACING - PLATE S-34 107
WASTEWATER PIPING
PIPE INSTALLATION
OPEN CUT TRENCH FOR PRESSURE PIPE - PLATE S-55 108
OPEN CUT TRENCH FOR PRESSURE PIPE - PLATE S-56 109
SERVICE LATERALS AND CONNECTIONS
HOUSE LATERAL - PLAN VIEW - PLATE S-19 110
HOUSE LATERAL - SECTION VIEW - PLATE S-20 111
HOUSE LATERAL OVER CONFLICT PIPE - PLATE S-23 112
HOUSE LATERAL UNDER CONFLICT PIPE - PLATE S-24 113
LOW PRESSURE RESIDENTIAL SEWER FORCE MAIN CONNECTIONS - PLATE S-50 114
GANG SEWER SERVICES FOR CONDOS AND TOWNHOMES - PLATE S-51 115
SEWER LATERAL VACUUM SYSTEM - PLATE S-52 116
FM CONNECTION TO 16" AND LARGER PIPING FOR PRIVATE PUMP STATIONS - PLATE S-22 117
PRIVATE PUMP OUT ASSEMBLY - PLATE S-46 118
FUSIBLE PVC PIPE ALLOWABLE BEND RADIUS AND PULLING FORCE - PLATE S-21 119
DUAL DIRECTIONAL DRILLING - PLATE S-21A 120
RESTRAINTS
PVC PIPE RESTRAINT JOINT SCHEDULE - PLATE S-38A 121
MECHANICAL RESTRAINT DETAILS - I - PLATE S-38C 122
MECHANICAL RESTRAINT DETAILS - II - PLATE S-38D 123
PLUGGED DEAD END USING TIE RODS - PLATE S-43 124
PLUGGED DEAD END USING MECHANICAL RESTRAINTS - PLATE S-44 125
THRUST BLOCK SIZE CHART - PLATE S-45 126
SEPARATION REQUIREMENTS
SEPARATION REQUIREMENTS FOR WATER, WASTEWATER AND RECLAIMED WATER MAINS - PLATE S-26 127
NOTES ON UTILITY SEPARATION REQUIREMENTS - SEWER - PLATE S-27 128
ADJUSTMENTS OVER / UNDER UTILITIES
ADJUSTMENT OVER EXISTING UTILITIES MECHANICAL RESTRAINTS - PLATE S-39 129
ADJUSTMENT OVER EXISTING UTILITIES TIE RODS - PLATE S-40 130
ADJUSTMENT UNDER EXISTING UTILITIES MECHANICAL RESTRAINTS - PLATE S-41 131
ADJUSTMENT UNDER EXISTING UTILITIES TIE RODS - PLATE S-42 132
ADJUSTMENT UNDER EXISTING UTILITIES PIPE JOINT DEFLECTION - PLATE S-47 133
ADJUSTMENT OVER EXISTING UTILITIES PIPE JOINT DEFLECTION - PLATE S-48 134
CASING DETAILS
TYPICAL CASING DETAIL - SEWER - PLATE S-25 135
TYPICAL SPLIT CASING DETAIL - SEWER - PLATE S-25A 136
PIPE SUPPORTS AND HANGERS
BRIDGE DECK PIPE HANGER DETAIL - PLATE S-28 137

SIDEWALL PIPE HANGER DETAIL - PLATE S-35 138
PIPE SUPPORT & POLE ASSEMBLY FOR FORCE MAIN - PLATE S-36 139
PIPE SUPPORT DETAILS FOR POLE ASSEMBLY - PLATE S-37 140
SWABBING
SWABBING PORT AND CLEAN OUT VAULT DETAIL- SECTION - PLATE S-54 141
SWABBING PORT AND CLEAN OUT VAULT DETAIL-PLAN - PLATE S-54A 142
SWABBING LAUNCHING STATION DETAIL FOR NEW FORCE MAIN UP TO 24" - PLATE S-54B 143
SWABBING LAUNCHING STATION DETAIL FOR FORCE MAINS UP TO 24" - PLAN - PLATE S-54C 144
RETROFIT SWABBING LAUNCHING STATION DETAIL FOR FORCE MAINS UP TO 24" - SECTION - PLATE S-54D . 145
LOCATE WIRE
LOCATE WIRE CONSTRUCTION FOR FORCE MAINS - PLATE S-49 146
LOCATE WIRE FOR BRANCH MAIN - PLATE S-49A 147
LOCATE WIRE BOX - PLATE S-49B 148
WASTEWATER VALVES
AIR VALVE ASSEMBLY INSIDE MANHOLE - PLATE S-29 149
OPTIONAL LOW PROFILE AIR VALVE ASSEMBLY INSIDE MANHOLE - PLATE S-29A 150
AIR VALVE ASSEMBLY INSIDE MANHOLE IN ROW - PLATE S-29B 151
SEWER VALVE DETAIL - PLATE S-30 152
SEWER SYSTEM VALVE BOX COVER - PLATE S-31 153
SEWER SYSTEM VALVE BOX - PLATE S-32 154
SEWER VALVE JACKET ADJUSTMENT AFTER ROADWAY RE-SURFACING - PLATE S-33 155
WASTEWATER ENCLOSURES
PREFABRICATED CONCRETE ENCLOSURE - PLATE S-53A 156
PREFABRICATED CONCRETE ENCLOSURE SIDE ELEVATION - PLATE S-53B 157
PREFABRICATED CONCRETE ENCLOSURE FRONT AND REAR ELEVATION - PLATE S-53C 158
SECTION IV – WASTEWATER PUMP STATION DETAILS
SUBMERSIBLE PUMP STATIONS
CLASS ONE SUBMERSIBLE PUMP STATIONS
CLASS ONE PUMP STATION DATA 159
CLASS ONE PUMP STATION SITE PLAN 160
CLASS ONE PUMP STATION WITH GENERATOR STATION DATA 161
CLASS ONE PUMP STATION SITE PLAN WITH GENERATOR. 162
CLASS ONE PUMP STATION WITH STANDBY BACKUP PUMP STATION DATA 163
CLASS ONE PUMP STATION WITH STANDBY BACKUP PUMP 164
CLASS TWO SUBMERSIBLE PUMP STATIONS
CLASS TWO PUMP STATION WITH GENERATOR STATION DATA 165
CLASS TWO PUMP STATION SITE PLAN WITH GENERATOR. 166
CLASS TWO PUMP STATION WITH STANDBY BACKUP PUMP STATION DATA 167
CLASS TWO PUMP STATION WITH STANDBY BACKUP PUMP 168
CLASS THREE SUBMERSIBLE PUMP STATIONS
CLASS THREE PUMP STATION DATA 169

CLASS THREE PUMP STATION SITE PLAN. 170
CLASS FOUR SUBMERSIBLE PUMP STATIONS
STANDARD CLASS FOUR PUMP STATION DATA 171
STANDARD CLASS FOUR PUMP STATION SITE PLAN. 172
IN-LINE BOOSTER PUMP STATION
IN-LINE BOOSTER PUMP STATION DATA 173
IN-LINE BOOSTER PUMP STATION SITE PLAN 174
PUMP STATION COMMON DETAILS
PUMP STATION LANDSCAPE PLAN 175
MISCELLANEOUS DETAILS 1 176
MISCELLANEOUS DETAILS 2 177
MISCELLANEOUS DETAILS 3 178
ELECTRIC DETAILS 179
DEMARCATION BOX & POWER DISTRIBUTION PANEL 180
SCADA INSTALLATION 181
STANDBY BACKUP PUMP DISTRIBUTED I/O PANEL 182
SERVICE DETAILS 183
GROUNDING SITE PLAN 184
GROUNDING DETAILS 185
ELECTRIC SINGLE LINE DIAGRAM 186
SHOP DRAWING SUBMITTALS
PUMP STATION SHOP DRAWINGS 1P-3P-VFD 187
PUMP STATION SHOP DRAWINGS 3P-VFD 198
PUMP STATION SHOP DRAWINGS FIXED SPEED 209
SECTION V – VACUUM SYSTEM DETAILS
VACUUM PODS
VACUUM POD CONCRETE TANK 220
VACUUM POD CONCRETE BUFFER TANK 221

WATER OR RECLAIM SERVICE INSTALLATIONS 2" AND SMALLER METER

PLATE W-1

A LOCATE WIRE SHALL BE PLACED ON SERVICES 10FT OR GREATER.

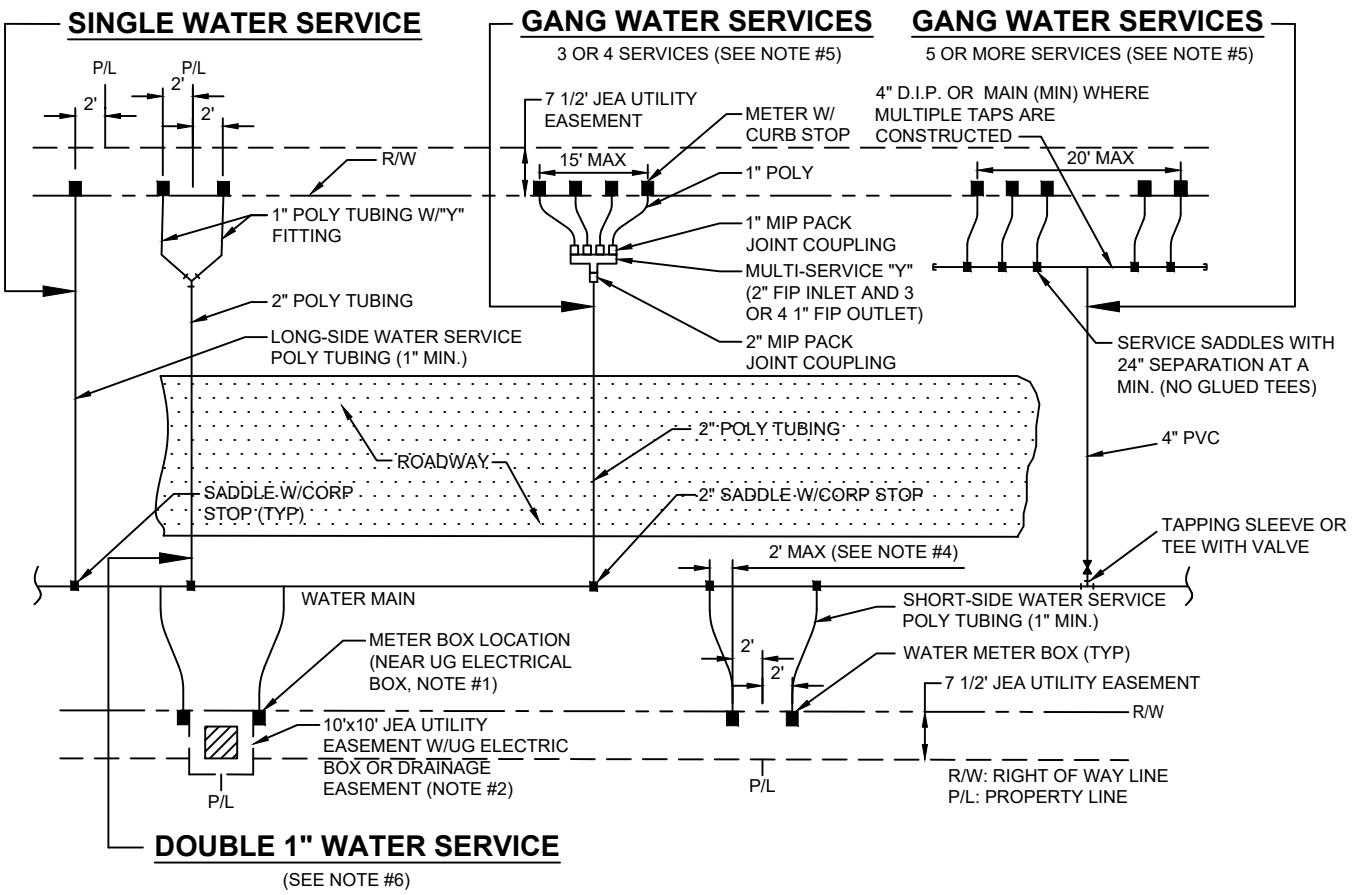

NOTES :

1. THE SKETCHES ABOVE INDICATE TYPICAL WATER SERVICE AND METER BOX LOCATIONS. ACTUAL LOCATIONS OF BOXES MAY VARY SLIGHTLY ACCORDING TO FIELD CONDITIONS ENCOUNTERED. TYPICALLY, THE METER BOX SHALL LOCATED AT THE R/W LINE BUT INSIDE THE 7 1/2' ELECTRIC EASEMENT.

2. UNLESS SPECIFIED OTHERWISE BY THE APPLICABLE COUNTY (NASSAU, CLAY OR ST. JOHNS COUNTY), THE METER BOX SHALL BE LOCATED IN THE JEA 7 1/2' UTILITY EASEMENT, AND TWO FEET INSIDE OF THE PROLONGATION OF ONE OF THE SIDE PROPERTY LINES. IF A CONFLICT EXISTS WITH OTHER UTILITIES, THE METER BOX MAY BE ADJUSTED TO FOUR FEET (MAX.) INSIDE PROPERTY LINES (IN LIEU OF TWO FEET). UNLESS APPROVED OTHERWISE BY JEA, THE WATER METER BOX SHALL BE LOCATED IN NON-TRAFFIC AREAS (NOT IN SIDEWALKS OR DRIVEWAYS). IF THE METER BOX IS APPROVED BY JEA TO BE LOCATED IN A DRIVEWAY OR SIDEWALK, THEN THE CONSTRUCTION SHALL MEET STANDARD DETAIL NUMBERS W-3&4, AT A MINIMUM (SEE W-3 AND W-4 FOR THE REQUIREMENTS OF SPECIAL ORDER POLYMER BOX AND TOP) . SET TOP OF BOX AT FINISHED GRADE. IF AN UNAPPROVED METER BOX IS IDENTIFIED BY JEA, THEN THE CONTRACTOR OR CUSTOMER SHALL BE RESPONSIBLE FOR THE COST OF RELOCATING ANY METER BOX WHICH IS LOCATED IN THE SIDEWALK OR DRIVEWAY OR THE COST TO PROVIDE THE CORRECT METER BOX. JEA SHALL APPROVE ALL DEVIATIONS TO THE ABOVE PRIOR TO CONSTRUCTION.

3. IF DRAINAGE OR OTHER EASEMENT LOCATED BETWEEN LOTS, METER BOXES SHALL BE LOCATED AT THE EASEMENT LINE BUT OUTSIDE THE EASEMENT AREA.

4. FOR SINGLE SERVICES, THE HORIZONTAL DISTANCE (PERPENDICULAR TO THE MAIN)BETWEEN THE SERVICES SADDLE AND THE METER BOX SHALL BE 2 FEET MAXIMUM. FOR DOUBLE 1" SERVICES, THE 2" POLY MAIN SHALL BE LOCATED CENTERED BETWEEN THE TWO METER BOXES. LOCATE WIRE IS REQUIRED ON ALL SERVICES 10' OR GREATER IN LENGTH. IF LOCATE WIRE IS REQUIRED, THE WIRE SHALL RUN FROM THE METER BOX (W/ PIG TAIL) TO THE MAIN (DEAD END SHALL BE TAPED WITH NO CONNECTION TO MAIN WIRE WITH THE LAST 24 INCHES STRIPED OF INSULATION/BARE WIRE AS GROUND). ALL EXCEPTIONS TO THIS REQUIREMENT MUST BE APPROVED BY JEA. THIS WILL ASSIST IN LOCATING EXISTING SERVICE LINES IN THE FUTURE.

5. GANG WATER SERVICES: FOR 3 OR 4 SERVICES IN ONE AREA, A DUCTICLE IRON PIPE (D.I.P.) WATER MAIN EXTENSION W/LOCATE WIRE MAY BE UTILIZED ON EITHER SHORT-SIDE OR LONG SIDE SERVICES WHERE SHOWN ON THE DRAWINGS. LOCATE WIRE SHALL EXTEND FROM ONE METER BOX TO CORP STOP AT WATER MAIN. FOR 5 OR MORE SERVICES IN ONE AREA, A WATER MAIN EXTENSION W/LOCATE WIRE MAY BE UTILIZED ON EITHER SHORT-SIDE OR LONG SIDE SERVICES WHERE SHOWN ON THE DRAWINGS (TAPS STAGGERED AND AT 2 FEET ON CENTER-MIN). FOR WATER SUPPLY HEADERS WHERE 5 OR MORE TAPS ARE CONSTRUCTED, THE HEADER PIPE SHALL BE 4" AT A MINIMUM. EXAMPLE: CONSTRUCT A 4" MAIN PVC CROSSING THE STREET FOR 5 RESIDENTIAL CUSTOMERS, UTILIZING 4" DIP, 4" PIPE, 4"X1" SADDLES AND 1" CORP STOPS (NO GLUED TEE FITTINGS). THE 4" OR LARGER D.I.P. WATER MAIN MUST BE SIZED AND DESIGNED BY THE P.E. ENGINEER.

6. DOUBLE 1" WATER SERVICES IS ALLOWED FOR SHORT SIDE OR LONG SIDE SERVICES AND WHERE SHOWN ON THE DRAWINGS.

7. A 1" IRRIGATION SERVICE MAYBE TAPPED INTO THE (1" MIN) DOMESTIC WATER SERVICE LINE (WHICH SERVES THE SAME CUSTOMER) UTILIZING A 1" BRONZE "Y" FITTING. (IN AREAS WHERE NO RECLAIMED WATER IS AVAILABLE).

8. No 2" AND SMALLER WATER SERVICE TAPS PERMITTED ON WATER MAINS WHICH ARE 20" AND LARGER SIZE.

9. RECLAIMED WATER METER BOXES OR SERVICES SHALL BE CONSTRUCTED SIMILAR TO THE ABOVE AND SHALL BE LOCATED, AT A MIN. OF 10' FROM THE POTABLE WATER SERVICE, AND/OR BOX AND NOT ALLOWED IN CONCRETE OR ASPHALT UNLESS APPROVED OTHERWISE BY JEA.

10. SERVICE SIZE SHALL BE SAME AS THE METER SIZE.

WATER SERVICE DETAIL - 2" AND SMALLER METER

PLATE W-2

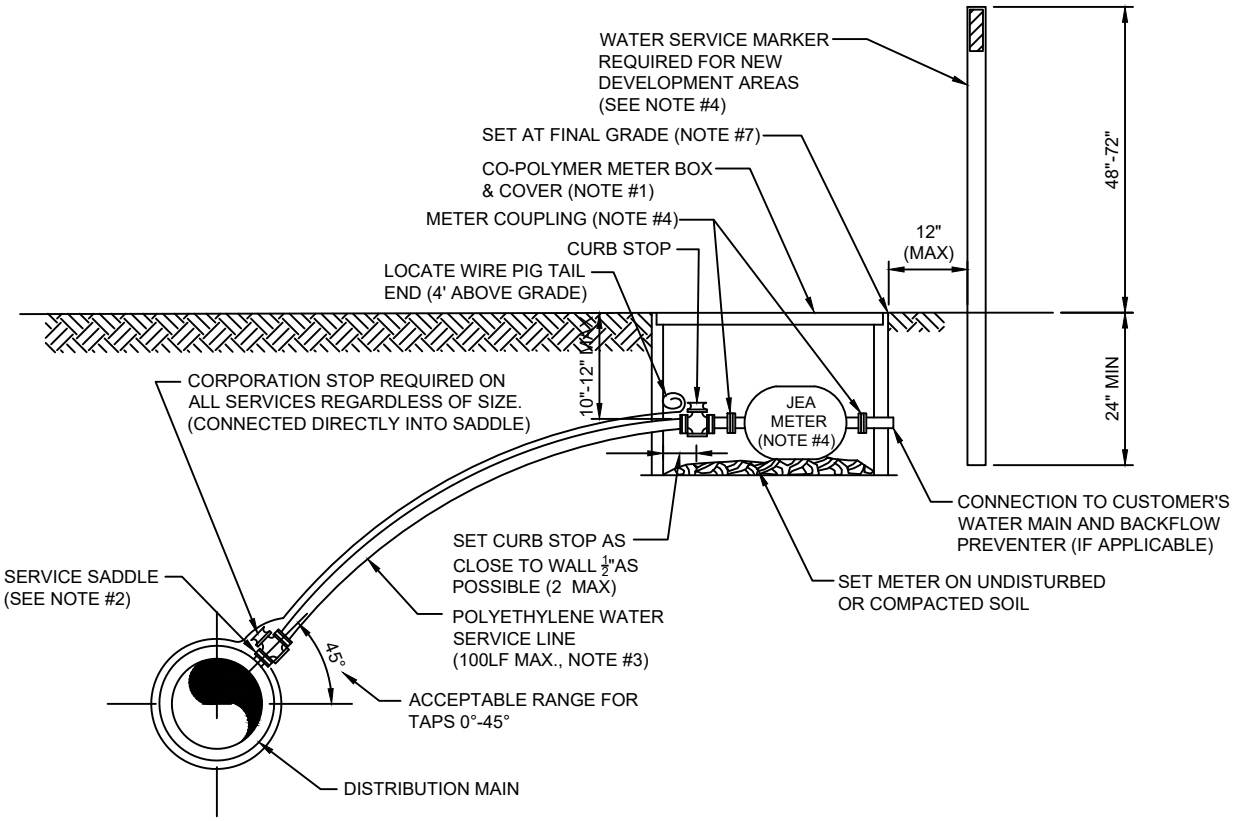

NOTES:

1. SEE PLATE W-1 FOR METER LOCATION REQUIREMENTS.
2. SINGLE BAND SADDLES SHALL BE UTILIZED ON NEW 1" WATER SERVICES WHICH ARE INSTALLED ON A DRY 10" SIZE OR SMALLER WATER MAIN (NEW WATER MAIN CONSTRUCTION). FOR WET TAPS OR WATER MAINS 12" SIZE AND LARGER, A DOUBLE BAND SADDLE IS REQUIRED. BRASS SADDLES MAY BE UTILIZED ON NEW 1 INCH AND SMALLER WATER SERVICES WHICH ARE INSTALLED ON A DRY 10 INCH OR SMALLER PVC WATER MAIN.
3. NO OPEN CUT UNDER ROADWAY PAVING ALLOWED UNLESS THE ROADWAY IS BEING RECONSTRUCTED OR IF DIRECTED OTHERWISE BY J.E.A. CONSTRUCT POLY LINE WITH 24" (MIN.) COVER UNDER ROADWAYS. THE POLY WATER SERVICE LINE SHALL BE SAME SIZE AS THE METER (1" MINIMUM) AND BE INSTALLED PERPENDICULAR TO THE MAIN AND NOT EXCEED 100LF UNLESS APPROVED OTHERWISE BY JEA.
4. INSTALL PVC PLUG IN ALL CURB STOPS IF WATER SERVICE IS "NOT IN USE" (I.E.: IF NO METER IS INSTALLED). WATER SERVICES SERVING VACANT LOTS (SERVICE NOT IN USE), SHALL INCLUDE A "W" CUT INTO THE CURB (CLOSEST TO THE METER BOX), AND PAINTED BLUE (PAINTED PURPLE FOR RECLAIMED WATER). IN ADDITION, FOR NEW DEVELOPMENT AREAS WHERE THE WATER SERVICE IS "NOT IN USE", A LANDSCAPE TIMBER OR 3x3 MIN. P.T. POST (TOP PAINTED BLUE OR PURPLE FOR RECLAIMED WATER). THE REMOVAL OR TRANSFER OF A WATER SERVICE SHALL INCLUDE BRASS METER COUPLINGS (HEX ON BARREL TYPE).
5. NO 2" AND SMALLER WATER SERVICE TAPS PERMITTED ON WATER MAINS WHICH ARE 20" AND LARGER SIZE.
6. THE CONTRACTOR SHALL BE RESPONSIBLE FOR THE REPAIR OR REPLACEMENT OF THE METER OR ELECTRONIC DEVICES IF DAMAGED BY THE CONTRACTOR DURING THE CONSTRUCTION PERIOD.
7. METER BOX AND TOP SHALL BE CLEAR OF ALL DEBRIS TO ALLOW FULL ACCESS TO BOX (i.e. NO DIRT, TRASH OR OTHER DEBRIS PLACED ON TOP OF BOX).
8. LOCATE WIRING REQUIRED ON ALL SERVICES 10' OR GREATER IN LENGTH. SEE PLATE W-44.

WATER METER BOX & COVER FOR 1" AND SMALLER METERS

PLATE W-3

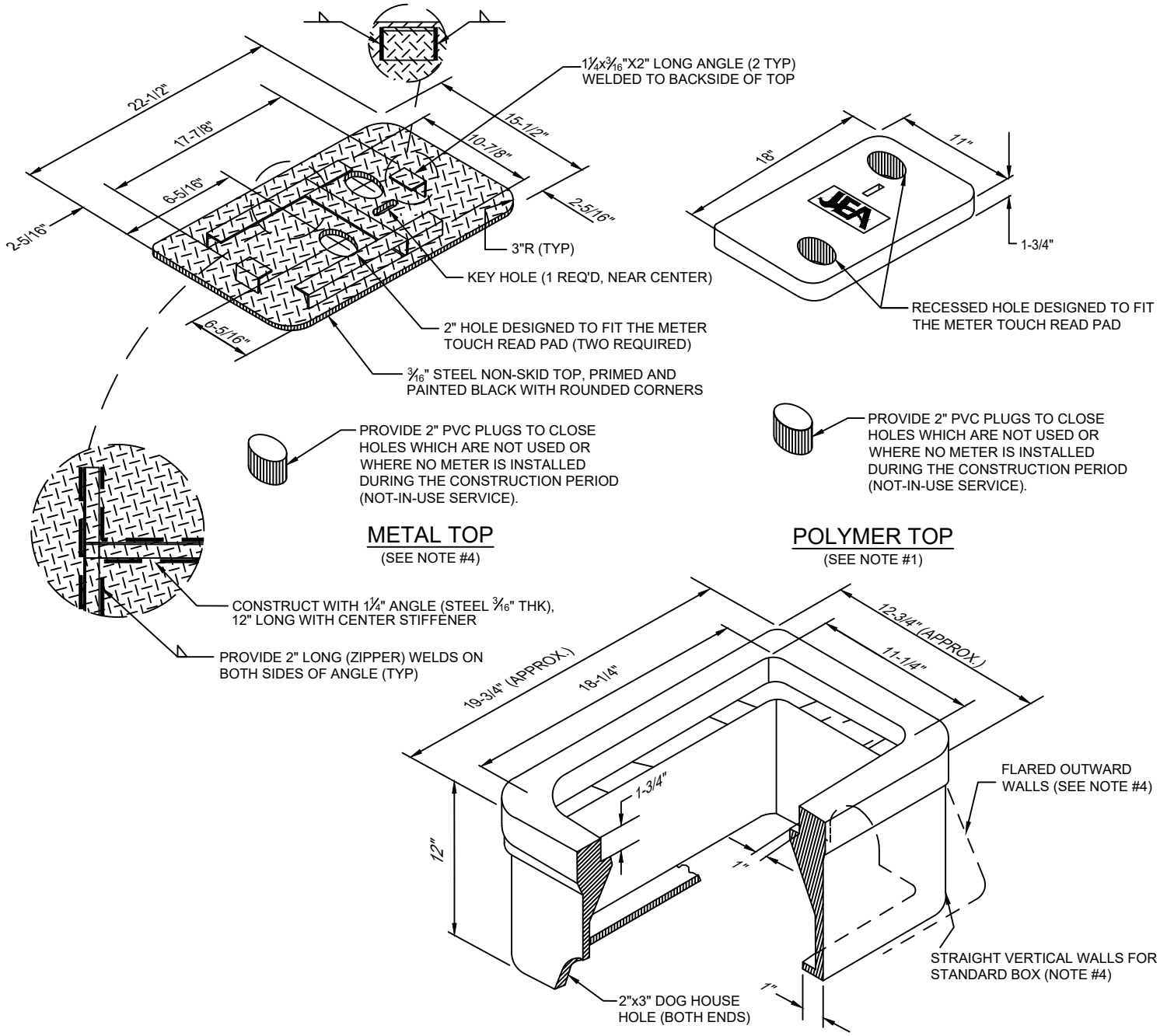

NOTES:

1. THE STANDARD BOX (A-8 (ASTM C857) LOAD RATING WITH STRAIGHT VERTICAL WALLS) & TOP (A-8 (ASTM C857) RATING WITH 2 HOLES) SHALL BE MADE OF POLYMER CONCRETE. (SIMILAR TO OLD BROOKS SERIES 37 BOX). BOX WALLS SHALL BE FIBERGLASS. THE INSIDE LIP OF THE BOX SHALL BE RATED SAME AS THE BOX. THE ONE HOLE LIDS ARE FOR SPECIAL ORDERS ONLY AND REQUIRE JEA'S APPROVAL PRIOR TO USE.

2. ALL SIZES SHOWN ARE IN INCHES AND ARE APPROXIMATE SIZES.

3. POLYMER BOX APPROXIMATE WEIGHT 25lbs. POLYMER TOP APPROXIMATE WEIGHT 20lbs. SEE CONSTRUCTION DETAILS W-3A (TWO HOLE) AND W-3B (ONE HOLE) FOR MANUFACTURING DETAILS FOR COVERS.

4. UNLESS APPROVED OTHERWISE IN WRITING BY JEA, ALL METER BOXES SHALL BE LOCATED IN NON-TRAFFIC AREAS (NOT IN THE ROADWAY, DRIVEWAYS OR SIDEWALKS). IF AN EXCEPTION TO THIS RULE IS APPROVED BY JEA, THEN THE FOLLOWING SHALL BE PROVIDED:
   A) UNDER NO CIRCUMSTANCE SHALL A METER BOX BE LOCATED IN A COMMERCIAL TRAFFIC AREA.
   B) IF AN EXCEPTION IS APPROVED IN WRITING THE METER BOX LOCATED IN A SIDEWALK OR RESIDENTIAL DRIVEWAY SHALL INCLUDE A POLYMER BOX WITH FLARED OUTWARD WALLS (NOT STRAIGHT WALLS) AND A POLYMER TOP. BOX AND TOP SHALL COMPLY WITH A-8 (ASTM C857), LOAD RATING.
   C) METAL TOPS MAY BE UTILIZED IF SPECIFICALLY APPROVED BY JEA MANAGER OR JEA METER O&M STAFF.

WATER METER BOX POLYMER COVER MODEL No. 37 - TWO HOLE

PLATE W-3A

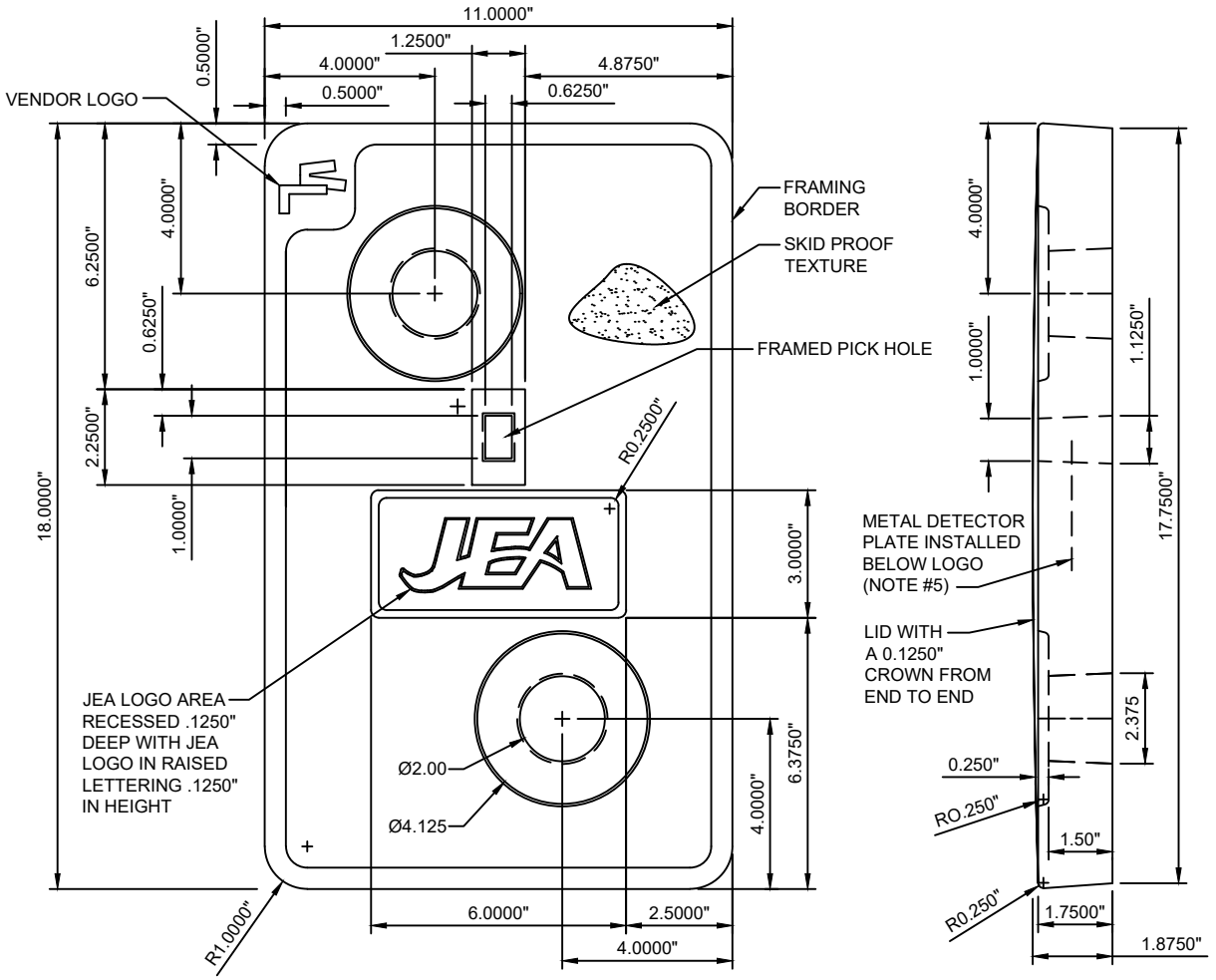

TOP VIEW

SIDE PROFILE

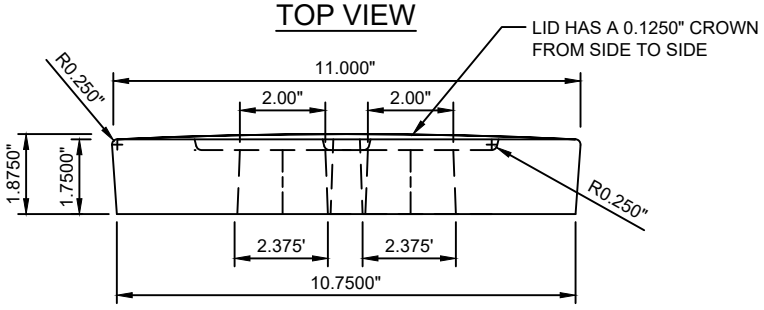

END PROFILE

NOTES:

1. ALL DIMENSIONS ARE IN INCHES.
2. COLOR SHALL BE OFF-WHITE, NON-POROUS, SAND TEXTURED SATIN FINISH.
3. ALL TOPS SHALL MEET A-8 (ASTM C857) LOAD RATING.
4. THE LID SHALL BE CERTIFIED BY CELLNET TECHNOLOGY INC AND SENSUS METERING SYSTEMS TO BE RF COMPATIBLE WITH THE SENSUS MTU.
5. METAL DETECTOR PLATE SHALL BE DETECTABLE BY JEA MAGNETIC LOCATE EQUIPMENT.

WATER METER BOX POLYMER COVER MODEL No. 37 - ONE HOLE

PLATE W-3B

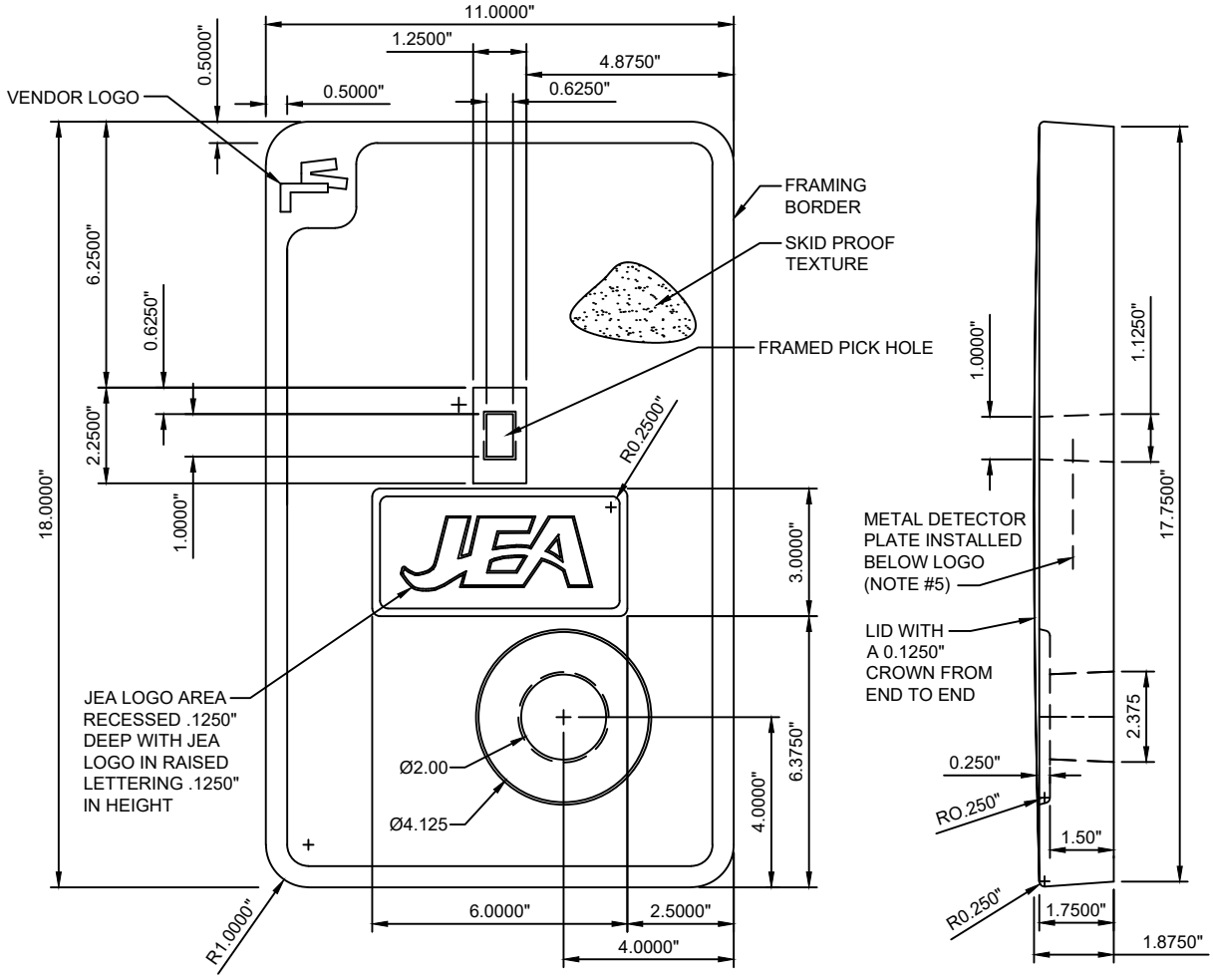

TOP VIEW

SIDE PROFILE

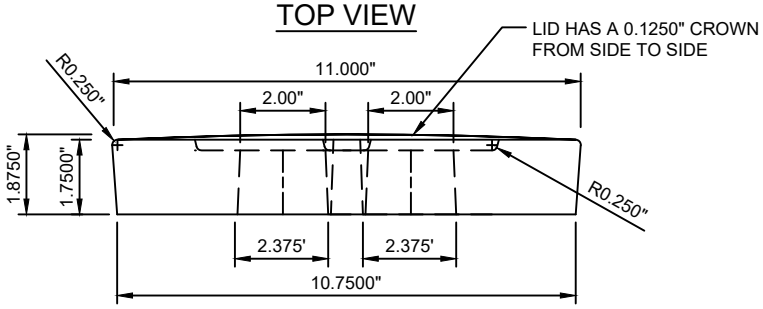

END PROFILE

NOTES:

1. ALL DIMENSIONS ARE IN INCHES.
2. COLOR SHALL BE OFF-WHITE, NON-POROUS, SAND TEXTURED SATIN FINISH.
3. ALL TOPS SHALL MEET A-8 (ASTM C857) LOAD RATING.
4. THE LID SHALL BE CERTIFIED BY CELLNET TECHNOLOGY INC AND SENSUS METERING SYSTEMS TO BE RF COMPATIBLE WITH THE SENSUS MTU.
5. METAL DETECTOR PLATE SHALL BE DETECTABLE BY JEA MAGNETIC LOCATE EQUIPMENT.
6. THE ONE HOLE LIDS ARE FOR SPECIAL ORDERS ONLY AND REQUIRE JEA'S APPROVAL PRIOR TO USE.

WATER METER BOX & COVER FOR 1-1/2" AND 2" METERS

PLATE W-4

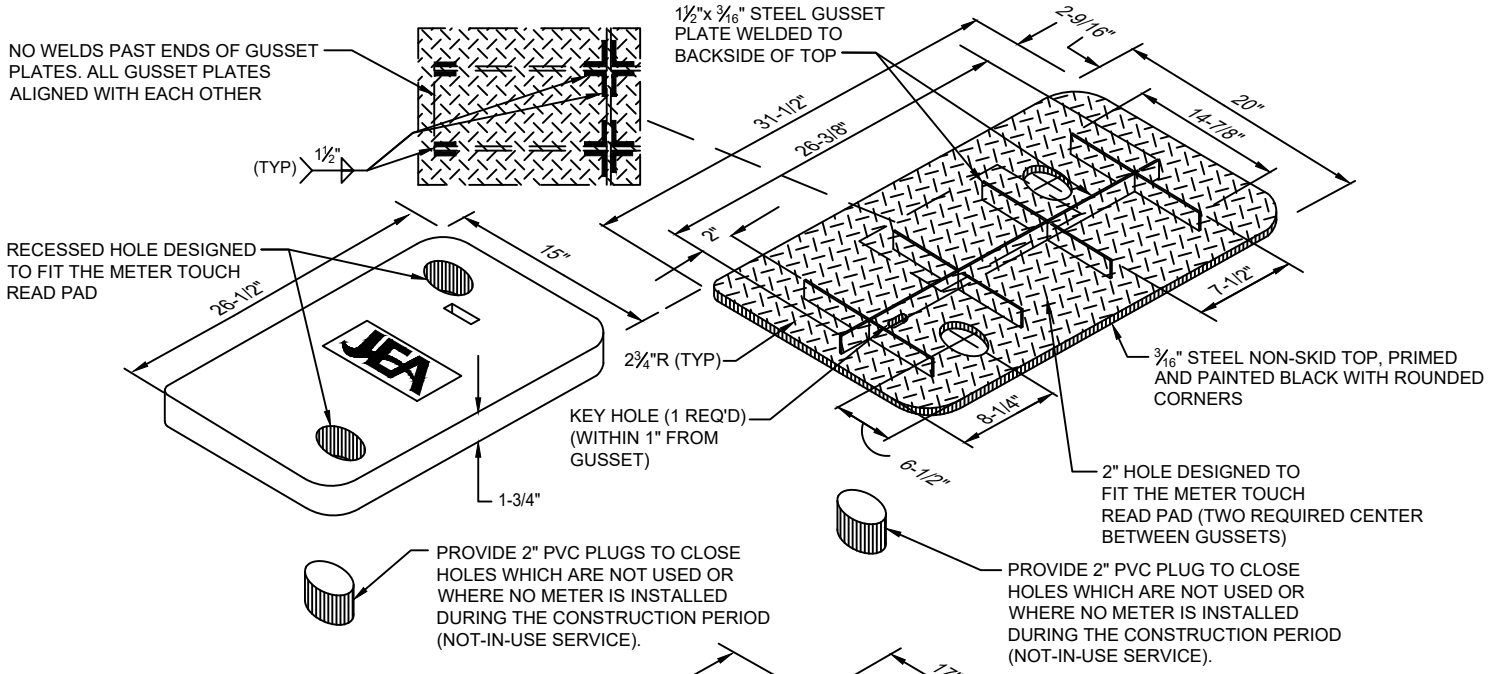

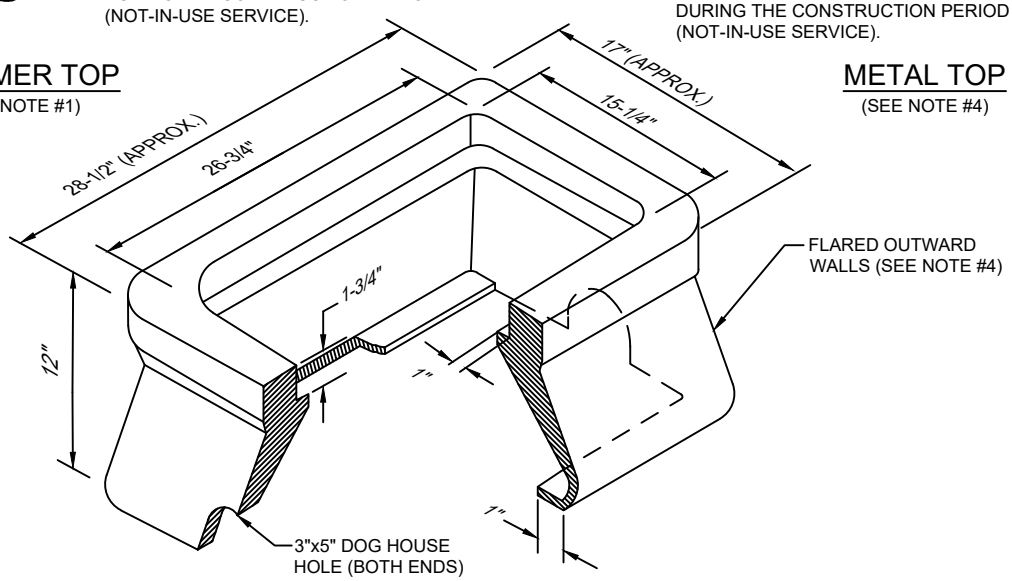

POLYMER BOX

NOTES:

1. THE STANDARD BOX (FLARED OUTWARD WALLS) & TOP (2 HOLE) SHALL BE MADE OF POLYMER CONCRETE. (SIMILAR TO OLD BROOKS SERIES 65). BOX WALLS SHALL BE FIBERGLASS. BOX, INCLUDING THE INSIDE LIP, AND TOP SHALL MEET A-8 (ATSM C857) LOAD RATING.
2. ALL SIZES SHOWN ARE IN INCHES AND ARE APPROXIMATE SIZES.
3. POLYMER BOX APPROXIMATE WEIGHT 50lbs. POLYMER TOP APPROXIMATE WEIGHT 50lbs. SEE CONSTRUCTION DETAIL W-4A FOR MANUFACTURING DETAIL FOR TWO HOLE COVER.
4. UNLESS APPROVED OTHERWISE IN WRITING BY JEA, ALL METER BOXES SHALL BE LOCATED IN NON-TRAFFIC AREAS (NOT IN THE ROADWAY, DRIVEWAYS OR SIDEWALKS).
5. METAL TOPS MAY BE UTILIZED IF SPECIFICALLY APPROVED BY A JEA MANAGER OR BY JEA METER O&M STAFF.

WATER METER BOX POLYMER CONCRETE COVER MODEL No. 65 - TWO HOLE

PLATE W-4A

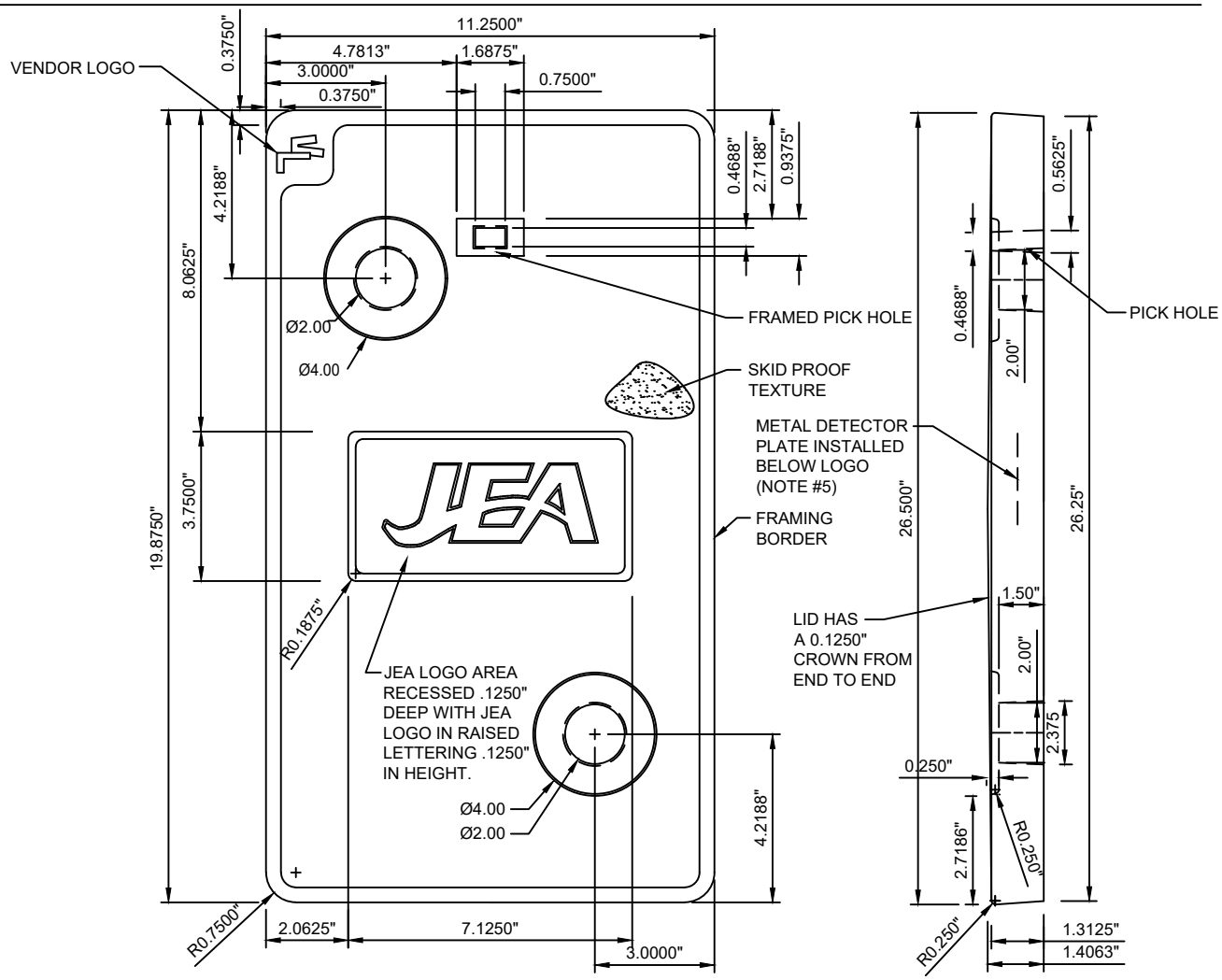

TOP VIEW

SIDE PROFILE

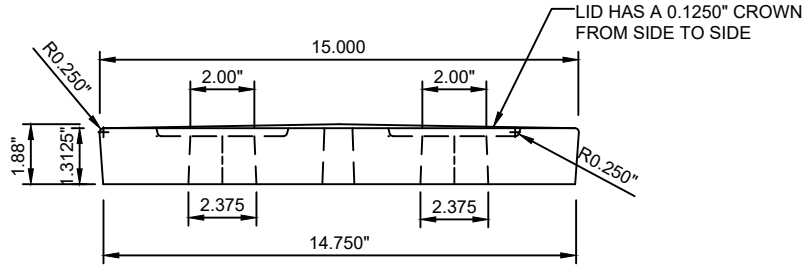

END PROFILE

NOTES:

1. ALL DIMENSIONS ARE IN INCHES.
2. COLOR SHALL BE OFF-WHITE, NON-POROUS, SAND TEXTURED SATIN FINISH.
3. ALL TOPS SHALL MEET A-8 (ASTM C857) LOAD RATING.
4. THE LID SHALL BE CERTIFIED BY CELLNET TECHNOLOGY INC AND SENSUS METERING SYSTEMS TO BE RF COMPATIBLE WITH THE SENSUS MTU.
5. METAL DETECTOR PLATE SHALL BE DETECTABLE BY JEA MAGNETIC LOCATE EQUIPMENT.

LARGE WATER METER INSTALLATIONS

PLATE W-5

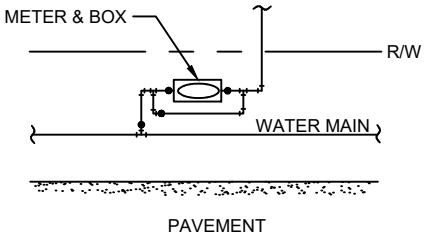

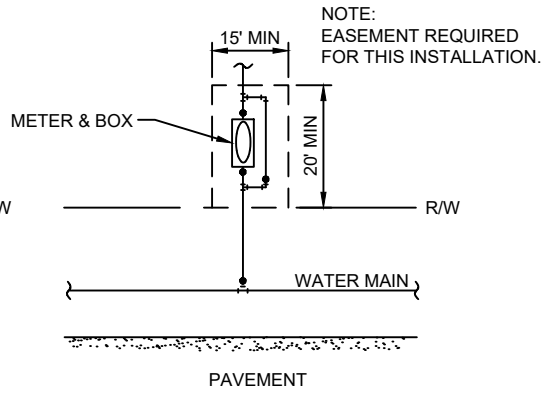

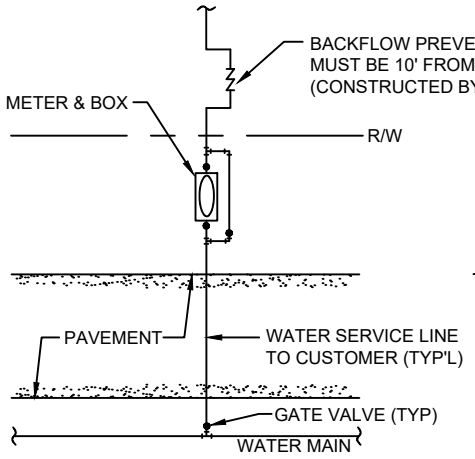

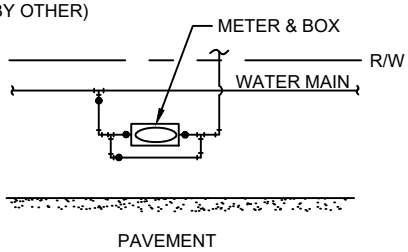

NOTES:

1. THE SKETCHES ABOVE ARE SUGGESTIONS FOR SOME TYPICAL LARGE METER (3" AND LARGE SIZE METER) INSTALLATIONS. ACTUAL INSTALLATIONS WILL VARY ACCORDING TO FIELD CONDITIONS ENCOUNTERED. FOR OTHER LOCATION LIMITATIONS SEE PLATE NOS. W-10 & W-11.

2. THE WATER METER BOX SHALL BE CO-POLYMER MATERIAL. IF THE BOX IS LOCATED IN A DRIVEWAY OR ROADWAY, THE BOX SHALL BE CONCRETE WITH HEAVY-DUTY ALL GALVANIZED (WITH REINFORCED GALV.) TOP. BOXES LOCATED IN DRIVEWAYS OR ROADWAYS MUST BE APPROVED BY JEA, PRIOR TO CONSTRUCTION.

3. FOR TYPICAL BOX INSTALLATION DETAILS SEE PLATE NO. W-6 THRU W-8.

4. FOR TYPICAL MANIFOLD INSTALLATION, SEE PLATE NO. W-9.

WATER METER INSTALLATION DETAILS 3" - 20" METERS

PLATE W-6

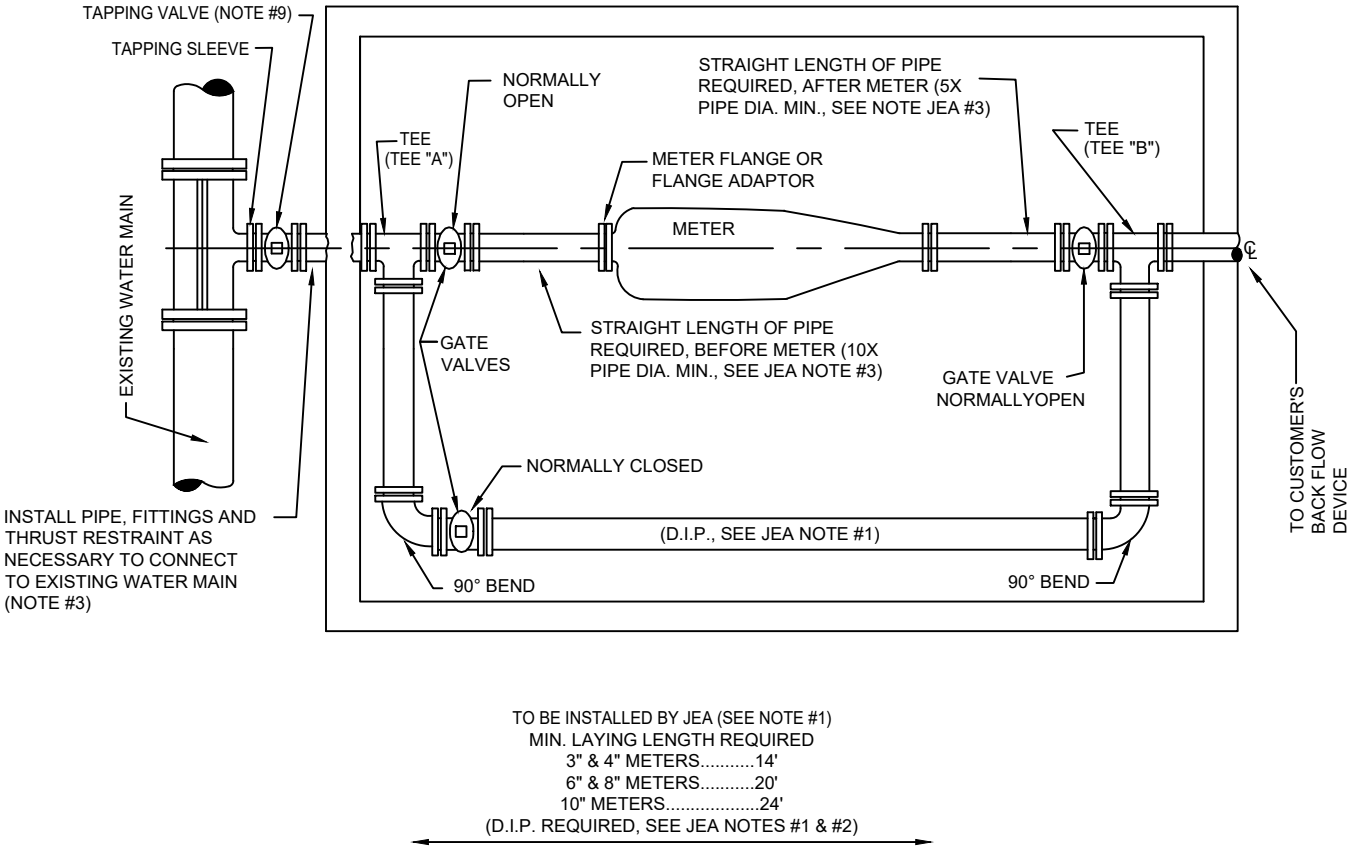

TO BE INSTALLED BY JEA (SEE NOTE #1)
MIN. LAYING LENGTH REQUIRED
3" & 4" METERS.....14'
6" & 8" METERS.....20'
10" METERS.....24'
(D.I.P. REQUIRED, SEE JEA NOTES #1 & #2)

CONTRACTOR NOTES:

1. FOR "PRE-PAVE" INSTALLATIONS, THE CONTRACTOR SHALL CONSTRUCT TAP AND WATER MAIN PIPING (PVC OR D.I.P.) BETWEEN TAPPING VALVE AND R/W PROVIDING AN UN-INSTALLED (OPEN) PIPE SECTION WITH A "MINIMUM LAYING LENGTH" AS SHOWN ABOVE FOR THE METER BOX AND BY PASS PIPING. THE FINISHED GRADE GRADE AT THE PROPOSED METER VAULT SHALL BE FLAT. CONTRACTOR SHALL PROVIDE METER BOX. JEA WILL INSTALL METER BOX AND METER ASSEMBLY (INCLUDING METER, THREE (3) GATE VALVES AND ASSOCIATED DUCTILE IRON PIPE ALL THE SAME SIZE).
2. FOR "FULL-TAP" METER ASSEMBLY, JEA WILL PROVIDE AND INSTALL THE TAP, METER BOX AND ALL OF THE ABOVE PIPING WITHIN THE R/W.
3. FOR BOX DETAILS SEE PLATES W-7 AND W-8.
4. ALL POTABLE PIPE AND FITTINGS TO BE SAME SIZE AS METER. IF UTILIZING HDPE PIPE.
5. MECHANICAL RETAINER GLAND RESTRAINTS OR MEGA LUGS SHALL BE UTILIZED TO RESTRAIN ALL JOINTS. THE USE OF THRUST BLOCKS, TIE RODS AND/OR BELL/ROD RESTRAINTS SHALL ONLY BE USED IF SPECIFICALLY APPROVE BY JEA MANAGEMENT.
6. PIPE FROM TAP TO R/W LINE SHALL BE RESTRAINED.
7. MAXIMUM COVER OF LARGE WATER METERS SHALL BE 36" (FROM TOP OF PIPE TO GRADE).
8. LOCATING WIRING REQUIRED FROM EXISTING WATER MAIN TO METER BOX. SEE PLATE W-44.
9. FOR METERS LARGER THAN 10" SIZE, PLEASE CONTACT JEA METER SHOP FOR ADDITIONAL REQUIREMENTS.
10. EACH SERVICE (FIRE MAIN, POTABLE WATER, ETC.) SHALL INCLUDE A SEPARATE ISOLATION VALVE (TAPPING VALVE OR GATE VALVE, BELOW GROUND TYPE) LOCATED PRIOR TO TEE "A". ALSO, UN-METERED FIRE MAIN SERVICES SHALL INCLUDE A SEPARATE ISOLATION VALVE (TAPPING VALVE OR GATE VALVE, BELOW GROUND TYPE).
11. FOR TYPICAL MANIFOLD INSTALLATION, SEE PLATE NO. W-9.
12. SERVICE SIZE SHALL BE SAME AS THE METER SIZE.

JEA NOTES:

1. ALL POTABLE PIPING BETWEEN TEE FITTINGS (TEE "A" AND TEE "B") SHALL BE DR18 OR CLASS 150 D.I.P., INCLUDING BY-PASS PIPING.
2. ALL POTABLE VALVES AND FITTINGS TO BE DUCTILE IRON RESTRAINED JOINT.
3. MINIMUM LENGTH OF TEN (10) PIPE DIAMETERS OF STRAIGHT PIPE TO BE INSTALLED ON INLET SIDE OF METER AND FIVE (5) PIPE DIAMETERS OF STRAIGHT PIPE TO BE INSTALLED ON OUTLET SIDE OF METER.
4. ALL METER INSTALLATIONS REQUIRE A TEST TEE TO BE INSTALLED BETWEEN THE METER AND VALVE ON CONSUMER SIDE OF METER.

36" x 60" x 48" CO-POLYMER WATER METER BOX 3" AND 4" METERS

PLATE W-7

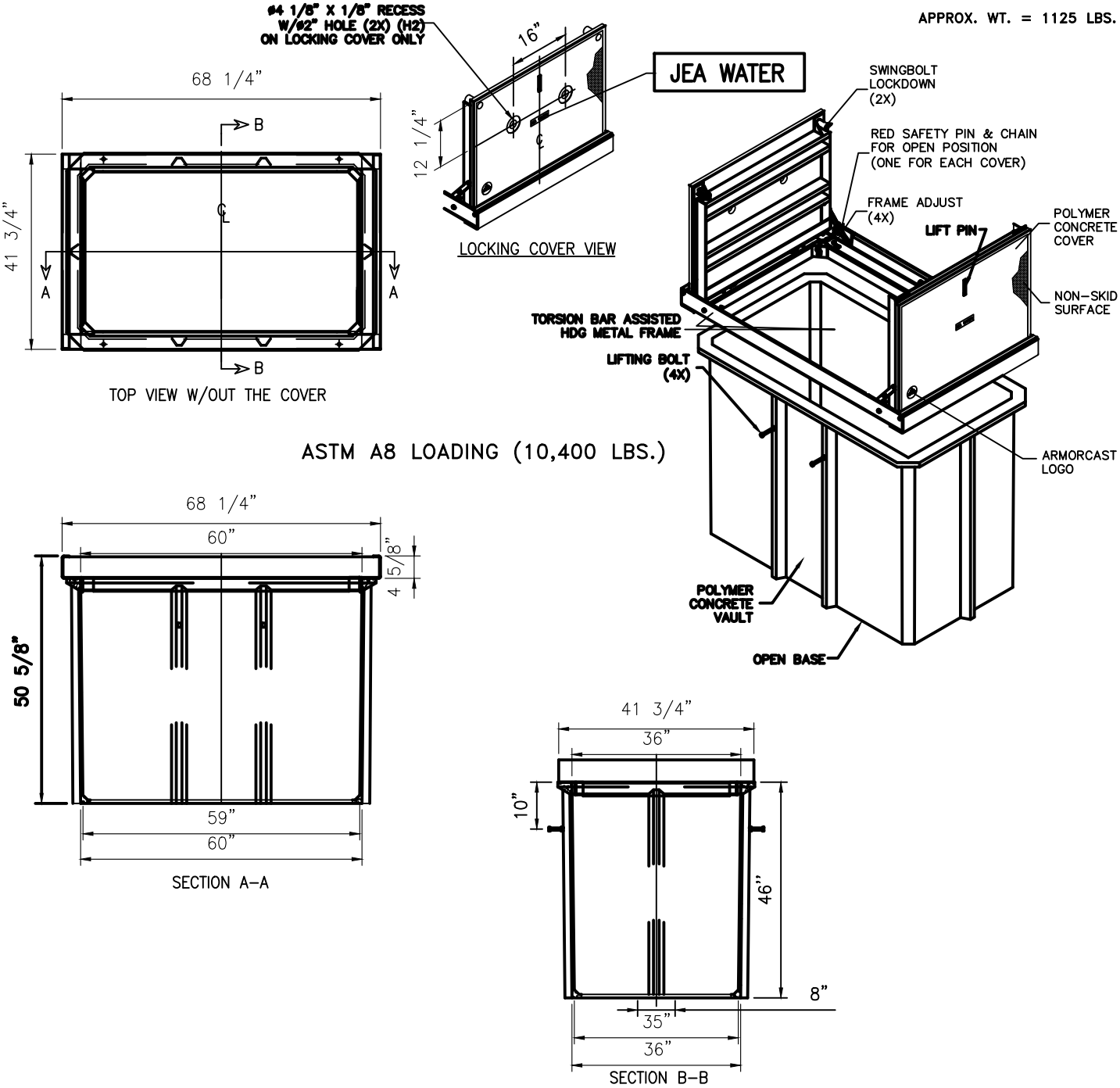

NOTES:

1. THE DIMENSIONS SHOWN ARE FOR A STANDARD 36" WIDE BY 60" LONG BY 48" DEEP BOX. DIMENSIONS VARY ACCORDING TO METER SIZE & TYPE. SEE PLATE W-8. ALL DIMENSIONS ARE SHOWN IN INCHES.
2. CONCRETE OR ASPHALT SLOPE: 1/8 IN./FT.
3. GRADE TO SLOPE AWAY FROM METER BOX.
4. DO NOT INSTALL METER BOX IN AREA SUBJECTED TO FLOODING.
5. LOCATING WIRING REQUIRED. SEE DETAIL W-44.
6. THE LARGE BOXES REQUIRE TWO 2" RECESSED HOLES TO FIT ANTENNA.
7. A 4" THICK CONCRETE BOTTOM SHALL BE CONSTRUCTED DURING THE BOX INSTALLATION.

48" x 72" x 48" CO-POLYMER WATER METER BOX 4" AND 6" METER

PLATE W-7A

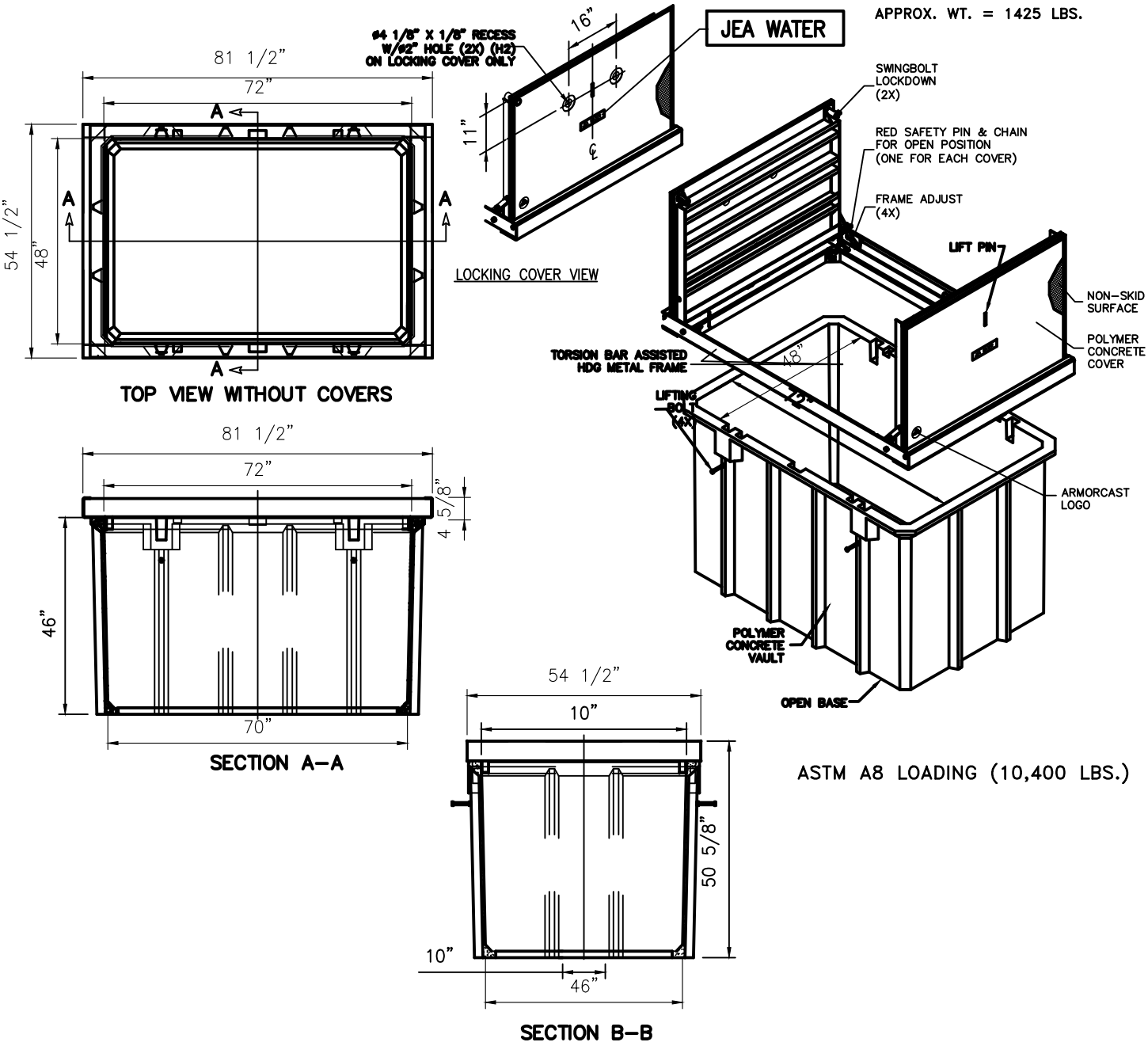

NOTES:

1. THE DIMENSIONS SHOWN ARE FOR A STANDARD 48" WIDE BY 72" LONG BY 48" DEEP BOX. DIMENSIONS VARY ACCORDING TO METER SIZE & TYPE. SEE PLATE W-8. ALL DIMENSIONS ARE SHOWN IN INCHES.
2. CONCRETE OR ASPHALT SLOPE: 1/8 IN./FT.
3. GRADE TO SLOPE AWAY FROM METER BOX.
4. DO NOT INSTALL METER BOX IN AREA SUBJECTED TO FLOODING.
5. LOCATING WIRING REQUIRED. SEE DETAIL W-44.
6. THE LARGE BOXES REQUIRE TWO 2" RECESSED HOLES TO FIT ANTENNA.
7. A 4" THICK CONCRETE BOTTOM SHALL BE CONSTRUCTED DURING THE BOX INSTALLATION.

48" x 96" x 48" CO-POLYMER WATER METER BOX 6" - 20" METERS

PLATE W-7B

APPROX. WT. = 1990 LBS.

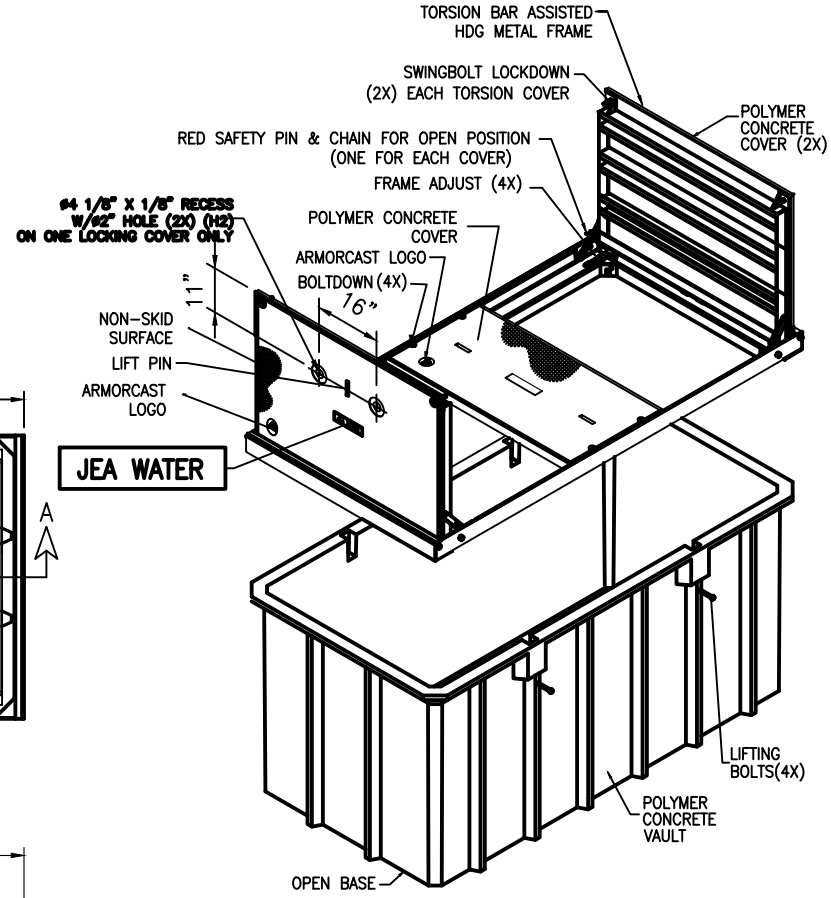

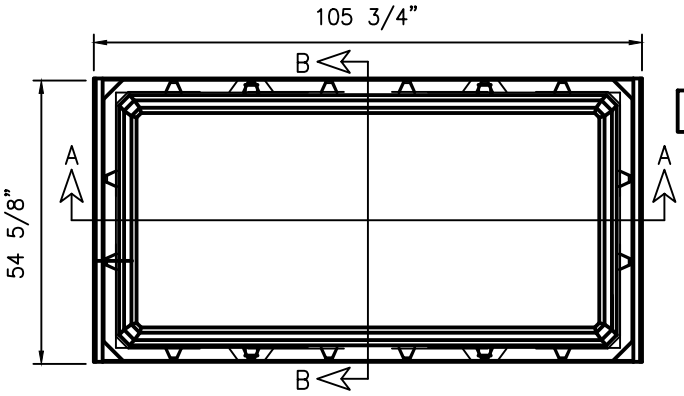

TOP VIEW WITHOUT COVERS

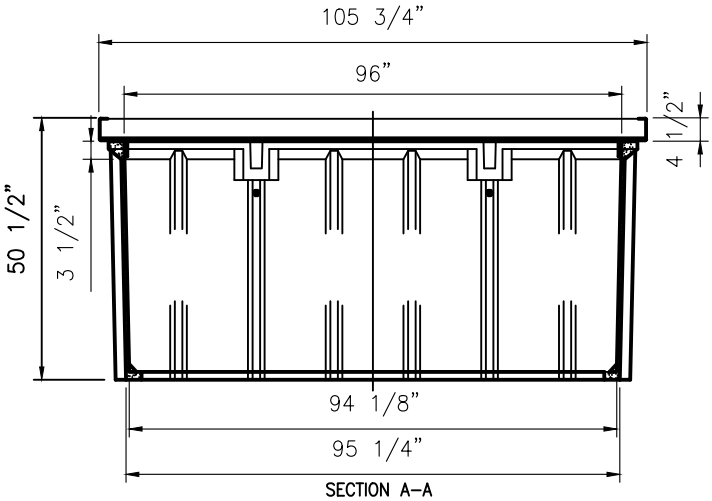

SECTION A–A

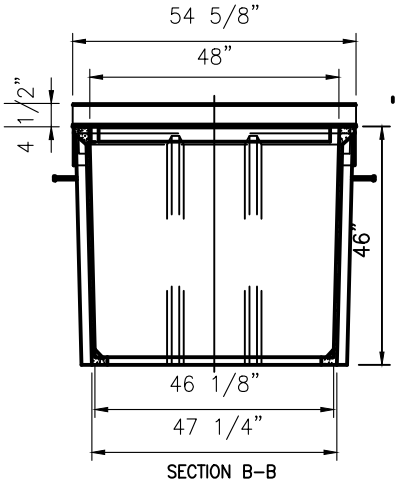

SECTION B–B

NOTES:

1. THE DIMENSIONS SHOWN ARE FOR A STANDARD 48" WIDE BY 96" LONG BY 48" DEEP BOX. DIMENSIONS VARY ACCORDING TO METER SIZE & TYPE. SEE PLATE W-8. ALL DIMENSIONS ARE SHOWN IN INCHES.
2. CONCRETE OR ASPHALT SLOPE: 1/8 IN./FT.
3. GRADE TO SLOPE AWAY FROM METER BOX.
4. DO NOT INSTALL METER BOX IN AREA SUBJECTED TO FLOODING.
5. LOCATING WIRING REQUIRED. SEE DETAIL W-44.
6. THE LARGE BOXES REQUIRE TWO 2" RECESSED HOLES TO FIT ANTENNA.
7. A 4" THICK CONCRETE BOTTOM SHALL BE CONSTRUCTED DURING THE BOX INSTALLATION.

WATER METER BOX DIMENSIONS (3" - 20" METERS)

Meter Description		Polymer Concrete Box Non-Traffic Rated (Note 1)
Type	SIZE	Width x Length x Depth (O.D.)
C-2 or T-2 Omni Style	3" 4" 6"	36" x 60" x 48" 36" x 60" x 48" 48" x 72" x 48"
Fire Meter	4" 6" 8" 10"	48" x 72" x 48" 48" x 96" x 48" 48" x 96" x 48" 48" x 96" x 48"
* Includes 6" Thick Bottom		

NOTES:

1. POLYMER CONCRETE BOXES SHALL ONLY BE PROVIDED IN NON-TRAFFIC (INCLUDING NOT IN DRIVEWAYS) LOCATIONS. FRP/ POLYMER CONCRETE METER BOX & COVER (BY ARMOURCAST PRODUCTS COMPANY):
   BOX AND THE EXTENSION IF REQUIRED, SHALL BE MANUFACTURED USING FIBERGLASS REINFORCED MATERIALS AND POLYMER CONCRETE. THE BODY OF THE BOX WITH NO BOTTOM SHALL BE MANUFACTURED USING FIBERGLASS REINFORCED MATERIALS, COMPRISED FROM POLYESTER RESINS AND FIBERGLASS MATTING. THE TOP COLLAR AND COVER SHALL BE MANUFACTURED FROM POURED POLYMER CONCRETE AND SHALL BE CONCRETE GREY COLOR. DURING THE MANUFACTURING PROCESS AND WHILE THE POLYMER CONCRETE IS IN A SOFTENED STATE, THE BODY SHALL BE MARRIED TO THE COLLAR BY INSERTING IT INTO THE COLLAR'S FORM. THE BOX AND COVER SHALL HAVE A LOAD RATING OF A8 (ASTM C857). THE BOX SHALL CONFORM TO THESE DESIGN FUNCTIONS AND DIMENSIONAL REQUIREMENTS AND INCLUDE LIFTING STUDS. BOX EXTENSIONS SHALL BE PROVIDED FOR ALL DEEP INSTALLATIONS. THE BOX SHALL BE A 2-PIECE ASSEMBLY INCLUDING MOLDED/RAISED JEA LOGO (LOGO ON BOTH PIECES). RECESSED HOLES (APPROXIMATELY 2" DIAMETER) DESIGNED TO FIT A SCHLUMBERGER ANTENNA USED WITH A METER INTERFACE UNIT (MIU). TWO COVER HOLD-DOWN BOLTS (1/2 - 13NC S.S. PENTAHEAD BOLTS). TORSION ASSISTED COMPONENTS AND TEXTURED NON-SKID SURFACE. A 2" PVC PLUG SHALL BE PROVIDED FOR EACH 2"-HOLE WHICH CAN BE COMPRESSED (TIGHT FIT) INTO THE 2" HOLE FOR TEMPORARY CLOSURE OF THE HOLE.

2. FOR WATER METERS LARGER THAN 6" OR FIRE MAINS LARGER THAN 10" SIZE, PLEASE CONTACT JEA METER SHOP FOR CONSTRUCTION REQUIREMENTS.

WATER SERVICE MANIFOLD ARRANGEMENT

PLATE W-9

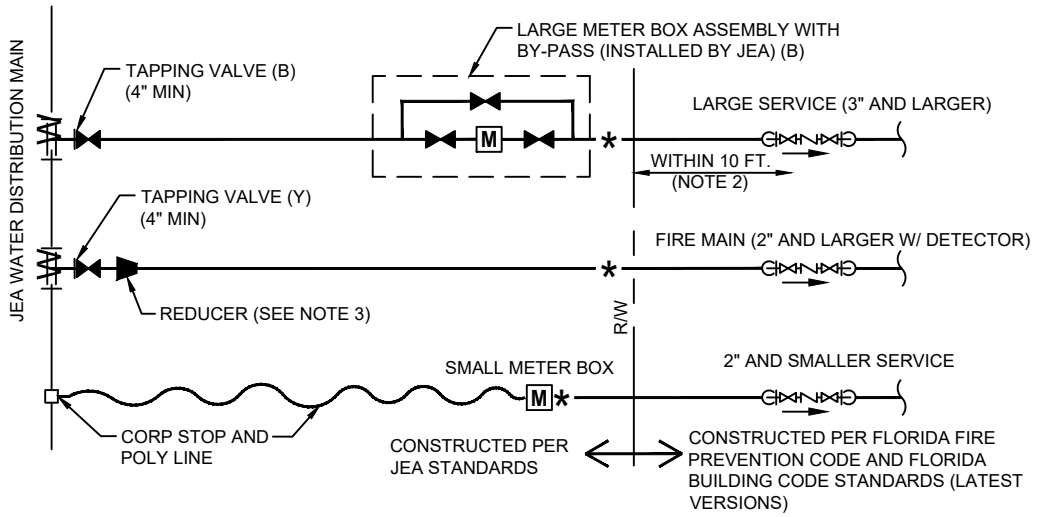

CASE I
SEPARATE INDIVIDUAL SERVICE ARRANGEMENT

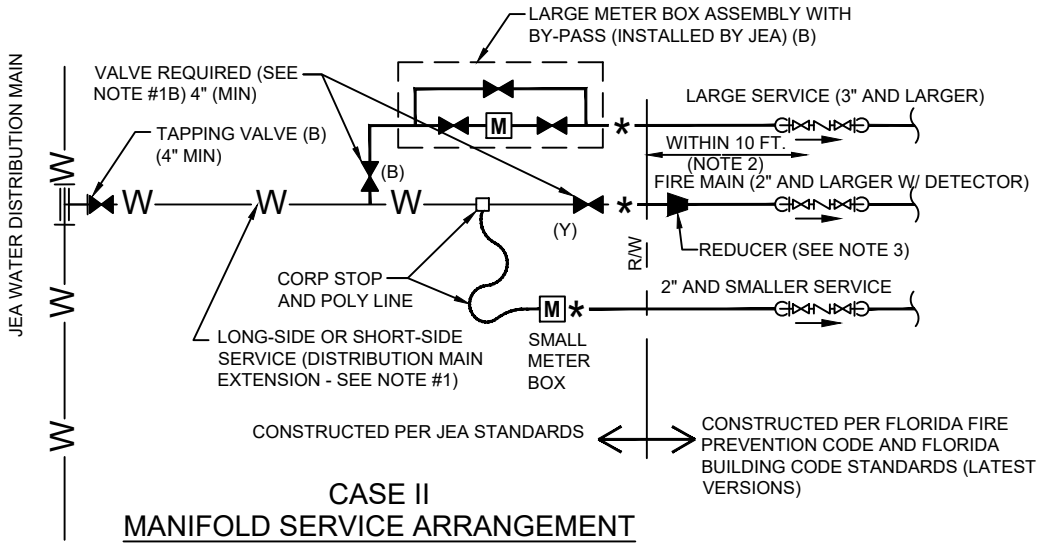

CASE II
MANIFOLD SERVICE ARRANGEMENT

KEY

- GATE VALVE
- (B) VALVE COVER PAINT COLOR (B) = BLUE (Y) = YELLOW
- * JEA POINT OF SERVICE
- BACKFLOW PREVENTER (NOTE #2)
- JEA WATER DISTRIBUTION MAIN
- M JEA METER

NOTES:

1. SHOULD AN INSTALLATION INCLUDE MULTIPLE WATER SERVICES FOR THE SAME CUSTOMER (i.e. DOMESTIC, IRRIGATION, FIRE) AND ONE OR MORE OF THOSE SERVICES ARE 3 INCH OR LARGER, A MANIFOLD ARRANGEMENT (SEE CASE II ABOVE) IS ACCEPTABLE PROVIDED:
   A. THE PROJECT DESIGN ENGINEER (FLORIDA PROFESSIONAL ENGINEER) PROVIDES ACCEPTABLE HYDRAULIC CALCULATION (ENGINEERED, SIGNED AND SEALED) WHICH MEETS THE MOST HYDRAULICALLY DEMANDING CASE.
   B. TO MEET JEA AND LOCAL FIRE CODE REQUIREMENTS, A SEPARATE ISOLATION VALVE (BELOW GROUND TYPE GATE VALVE OR CORP STOP) SHALL BE PROVIDED FOR EACH SERVICE ON A MANIFOLD ARRANGEMENT.
   C. THE SPECIFIC PROPOSED WATER SERVICE ARRANGEMENT IS IN ACCORDANCE WITH JEA STANDARDS AND IS REVIEWED AND APPROVED BY JEA.
2. BACKFLOW PREVENTER (BFP) - THE ABOVE GROUND VALVE SHALL MEET JEA'S CROSS-CONNECTION CONTROL PROGRAM. THIS JEA APPROVED VALVE SHALL BE INSTALLED WITHIN TEN (10) FEET OF RIGHT-OF-WAY LINE OR JEA EASEMENT UNLESS APPROVED OTHERWISE BY JEA. ALL BFPs INSTALLED ON A FIRE MAIN SHALL INCLUDE A DETECTOR.
3. REDUCER ONLY REQUIRED IF APPROVED BY JEA REPRESENTATIVE (3" SERVICE REDUCER MUST BE AT CONTROL VALVE AT MAIN, 2" SERVICE CAN BE REDUCED TO $1\frac{1}{2}$ INSIDE THE METER BOX)

RECLAIM CROSS CONNECTION CONTROL DEVICE

PLATE W-15

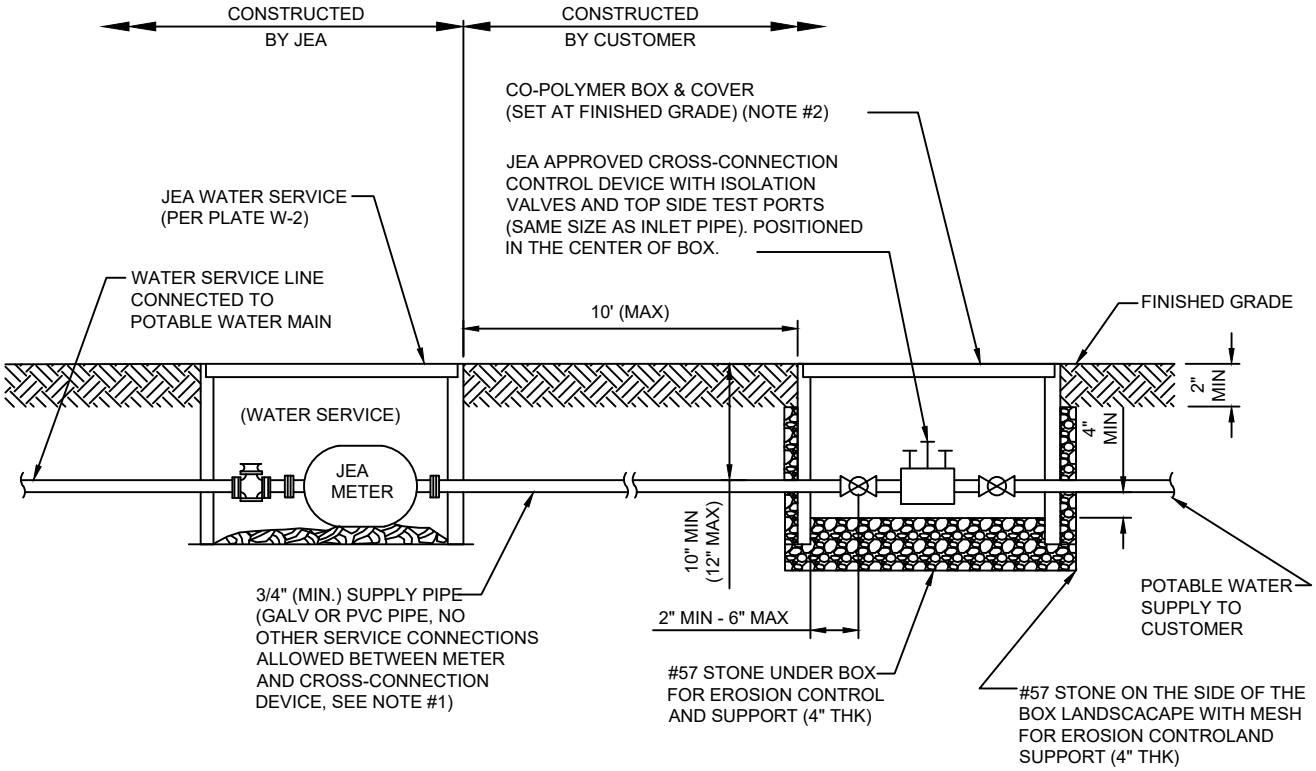

NOTES:

1. THE POTABLE WATER CUSTOMER IS REQUIRED TO INSTALL AND MAINTAIN A JEA APPROVED CROSS-CONNECTION DEVICE ON THEIR POTABLE WATER SERVICE LINE. OPERATION AND MAINTENANCE OF THIS CROSS-CONNECTION DEVICE SHALL COMPLY WITH JEA'S CROSS-CONNECTION CONTROL PROGRAM AND ASSOCIATED OPERATIONS POLICIES. ALL REDUCED PRESSURE ASSEMBLIES SHALL BE MOUNTED ABOVE GRADE.

2. ONLY DOUBLE CHECK VALVE ASSEMBLIES MAY BE INSTALLED BELOW GROUND. THESE DEVICES MAY BE INSTALLED IN A TYPICAL 1" (CO-POLYMER) METER BOX WITH SOLID LID (GENERIC LID WITH NO "JEA" LOGO, SEE ALSO W-3). THE SIZE OF BOX SHALL BE 12"x20", AT A MINIMUM. IT SHALL BE NOTED THAT IF THE HIGH MEAN GROUND WATER LEVEL FALLS INSIDE THIS BOX, THEN THE CROSS-CONNECTION CONTROL DEVICE MUST BE INSTALLED ABOVE GROUND. ACCEPTABLE DOUBLE CHECK VALVE ASSEMBLIES (BRONZE BODY WITH TWO CHECK VALVES, TWO BALL VALVES AND UNION CONNECTIONS BETWEEN BALL VALVES AND THE DEVICE). INCLUDE: WATTS U007M2QT, WILKINS 950XLTU OR JEA APPROVED EQUAL.

3. BACKFLOW PREVENTION DEVICES REQUIRED WHEN:
   IRRIGATION SYSTEMS - REQUIRED ON IRRIGATION SYSTEMS AT THE CONNECTION TO POTABLE SYATEM
   RESIDENTIAL SYSTEMS - REQUIRED ON WATER SERVICE IF RECLAIMED SERVICE WATER AVAILABLE TO SITE
   COMMERCIAL SITES - REQUIRED ON ALL WATER SERVICES
   INDUSTRIAL SITES - REQUIRED ON BOTH WATER AND RECLAIMED SERVICE ON, WATER SERVICE EVEN IF NO RECLAIMED

4. JEA IRRIGATION SERVICE CONNECTIONS REQUIRE ABOVE GRADE REDUCED PRESSURE BACKFLOW PREVENTERS. (SEE PLATE W-15A)

WATER CROSS CONNECTION CONTROL DEVICE

PLATE W-15A

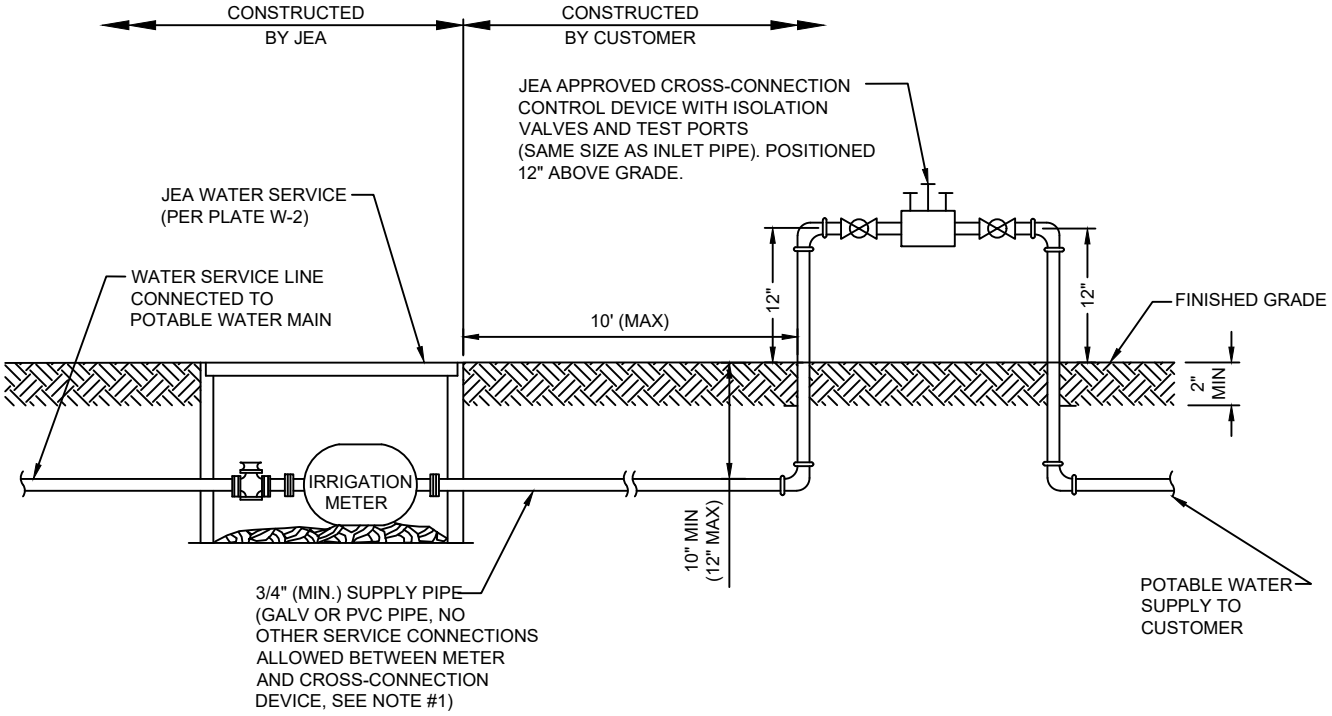

NOTES:

1. WATER SERVICE CONNECTIONS REQUIRE ABOVE GRADE REDUCED PRESSURE BACKFLOW PREVENTERS. (SEE PLATE W-15)

2. BACKFLOW PREVENTION DEVICES REQUIRED WHEN:
   IRRIGATION SYSTEMS - REQUIRED ON IRRIGATION SYSTEMS AT THE CONNECTION TO POTABLE SYSTEM
   RESIDENTIAL SYSTEMS - REQUIRED ON WATER SERVICE IF RECLAIMED SERVICE WATER AVAILABLE TO SITE
   COMMERCIAL SITES - REQUIRED ON ALL WATER SERVICES
   INDUSTRIAL SITES - REQUIRED ON BOTH WATER AND RECLAIMED SERVICE CONNECTIONS.

3. RESIDENTIAL IRRIGATION SERVICES MAY UTILIZE AN ALTERNATE BACKFLOW PREVENTER LOCATION IF THE FOLLOWING CONDITIONS EXITS:
   3.a. CUSTOMER HAS SUBMITTED A COMPLETED "CUSTOMER AFFIDAVIT" FORM AND
   3.b. THERE ARE NO ADDITIONAL CONNECTIONS BETWEEN THE METER AND THE BACKFLOW PREVENTER, AND
   3.c. THE ALTERNATE BACKFLOW LOCATION IS EASILY ACCESSIBLE TO JEA AND BACKFLOW TESTERS.

FIRE HYDRANT INSTALLATION USING TAPPING SLEEVE & VALVE

PLATE W-12

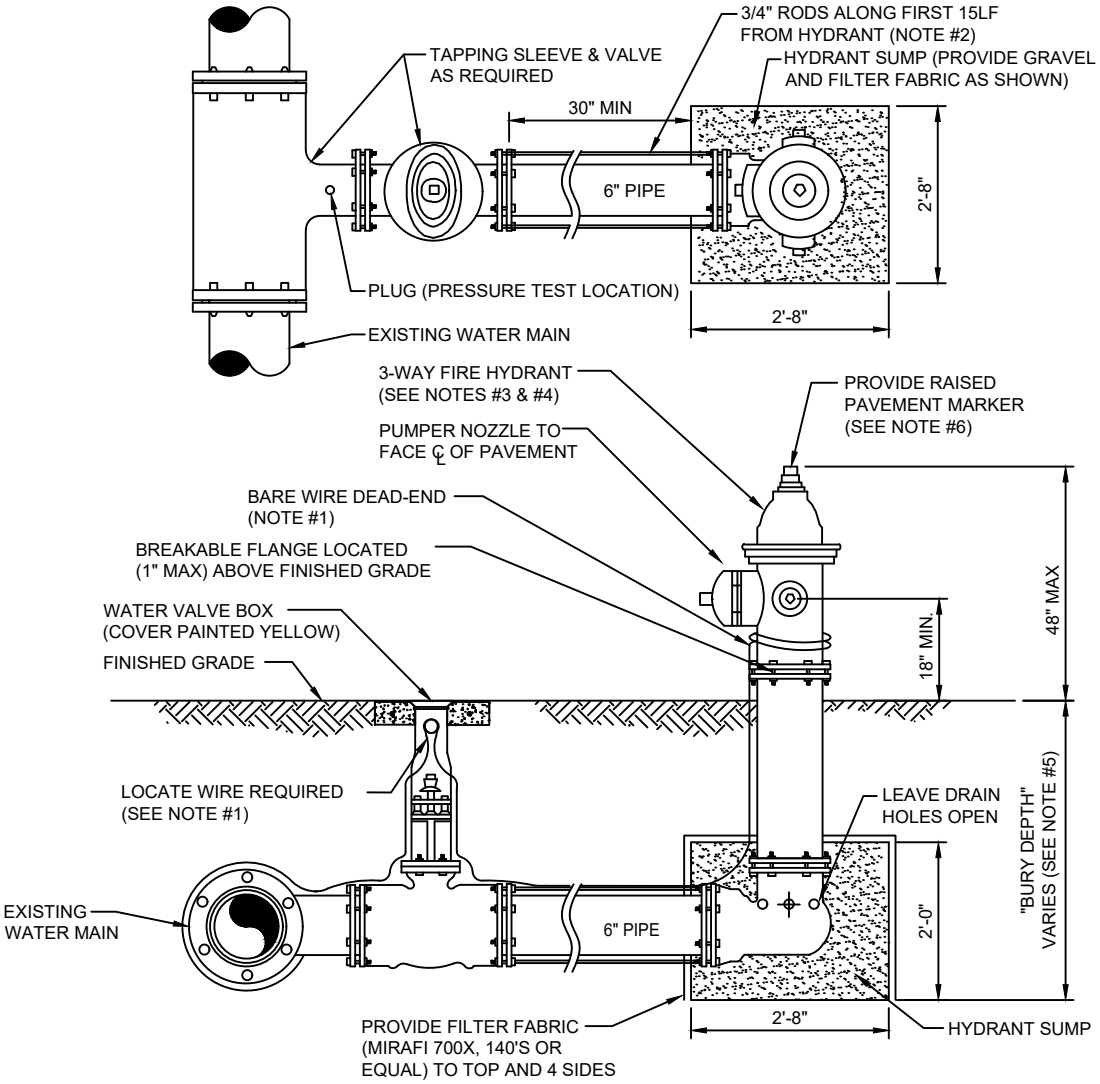

NOTES:

1. LOCATE WIRE SHALL BE ROUTED FROM THE VALVE TO THE HYDRANT AS SHOWN ABOVE LEAVING ENOUGH SLACK TO REACH 4' ABOVE FINAL GRADE. THE END OF THE WIRE SHALL BE SECURED TO THE PIPE MAIN. SEE SECTION 350, LOCATE WIRE INSTALLATION PARAGRAPH.

2. FIRE HYDRANTS SHALL BE INSTALLED BETWEEN BACK OF CURB AND FACE OF SIDEWALK. ALL HYDRANTS SHALL BE LOCATED NO LESS THAN THREE (3) FEET FROM THE EDGE OF PAVEMENT OR BACK OF CURB OF THE ADJACENT ROADWAY AND NO LESS THAN THREE (3) FEET FROM ANY PHYSICAL FEATURE WHICH MAY OBSTRUCT ACCESS OR VIEW OF ANY HYDRANT UNLESS OTHERWISE APPROVED BY THE JEA. THE MAXIMUM DISTANCE (BACK OF CURB) SHALL BE IN COMPLIANCE WITH LOCAL COUNTY FIRE DEPARTMENT RULES AND AS APPROVED BY JEA. FOR OTHER LOCATION LIMITATIONS SEE PLATES W-10 AND W-11. IF PIPING BETWEEN TEE AND HYDRANT IS LONGER THAN 80 LF, AN ADDITIONAL 6" GATE VALVE IS REQUIRED AT THE HYDRANT LOCATION (PROVIDE 30" SEPARATION). ALL PIPING, VALVES AND FITTINGS ALONG THE HYDRANT BRANCH MAIN WHICH IS WITHIN 15 LF OF THE HYDRANT SHALL BE RESTRAINED UTILIZING ONLY TWO 3/4" DIA (THREADED ENDS) STEEL RODS AND EYE BOLTS (NO JOINT RESTRAINT DEVICES REQUIRED). A SPLIT SERRATED RING WITH RESTRAINT EARS (EBAA 15 PF06 or EQUAL) MAYBE USED IN THIS ASSEMBLY. ALL OTHER JOINTS ALONG THE HYDRANT BRANCH MAIN OUTSIDE OF THE FIRST 15 LF SHALL INCLUDE JOINT RESTRAINTS.

3. OPERATION OF THE FIRE HYDRANT SHALL BE EITHER FULL OPEN POSITION OR TOTALLY CLOSED POSITION. THE HYDRANT SHALL NOT BE UTILIZED TO THROTTLE OUTLET FLOW.

4. PRIOR TO PROJECT FINAL INSPECTION, THE HYDRANT AND ALL ABOVE GROUND PIPING SHALL BE RE-OILED, GREASED AND REPAINTED (RUS- KIL ENAMEL-INTERNATIONAL YELLOW OR EQUAL). PRIVATELY OWNED AND MAINTAINED FIRE HYDRANTS SHALL BE PAINTED RED.

5. FIRE HYDRANTS SHALL BE ORDERED WITH PROPER "BURY DEPTH" TO MEET ACTUAL FIELD CONDITIONS. THIS IS ESPECIALLY IMPORTANT FOR BRANCH LINES WHICH TEE-OFF A 12" OR LARGER WATER MAIN. UNLESS APPROVED OTHERWISE BY JEA, THE INSTALLATION OF (45°) BENDS IS NOT ACCEPTABLE WHEN UTILIZED TO CORRECT AN IMPROPERLY FURNISHED HYDRANT. THE USE OF HYDRANT EXTENSIONS SHOULD BE MINIMIZED.

6. BLUE REFLECTIVE MARKERS SHALL BE INSTALLED IN SUCH A MANNER THAT THE REFLECTIVE FACE OF THE MARKER IS PERPENDICULAR TO A LINE PARALLEL TO THE ROADWAY CENTERLINE. THE BLUE REFLECTIVE MARKERS SHALL BE PLACED IN THE CENTER OF THE TRAVEL LANE, DIRECTLY ACROSS FROM AND ADJACENT TO EACH FIRE HYDRANT.

FIRE HYDRANT INSTALLATION USING MECHANICAL JOINT TEE

PLATE W-13

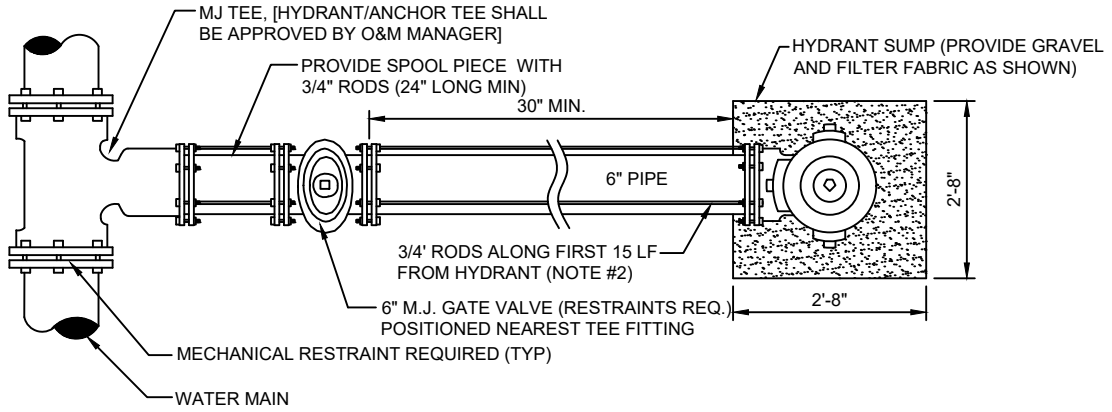

PLAN

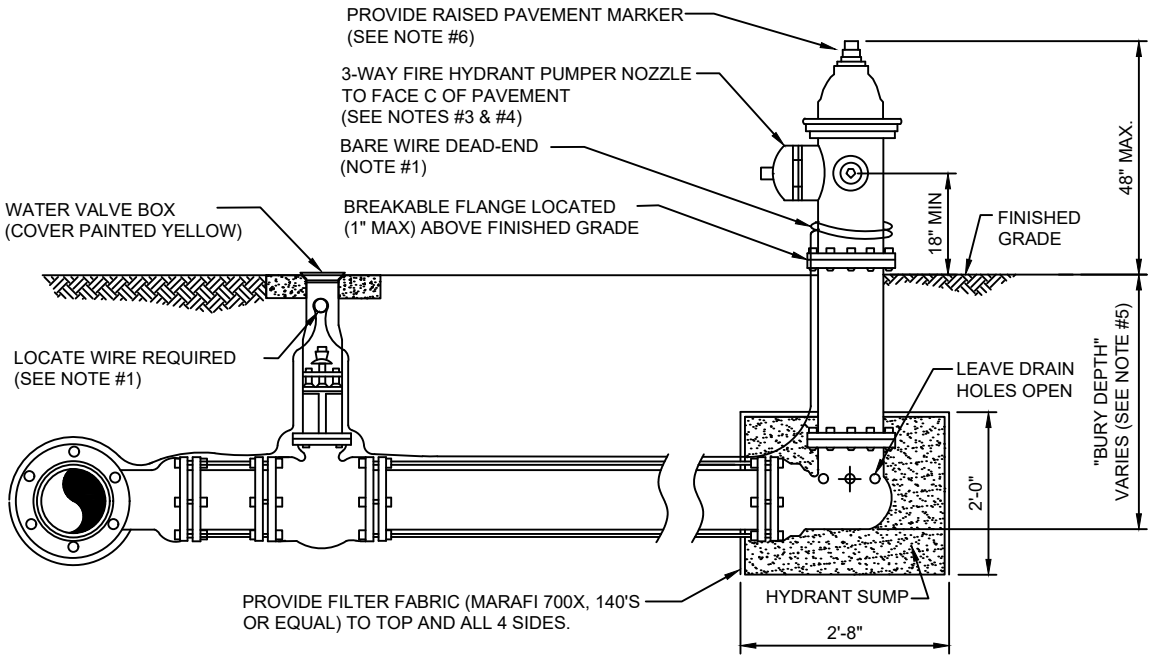

SECTION

NOTES:

1. LOCATE WIRE SHALL BE ROUTED FROM THE VALVE TO THE HYDRANT AS SHOWN ABOVE LEAVING ENOUGH SLACK TO REACH 4' ABOVE FINAL GRADE. THE END OF THE WIRE SHALL BE SECURED TO THE PIPE MAIN. SEE SECTION 350, LOCATE WIRE INSTALLATION PARAGRAPH.

2. FIRE HYDRANTS SHALL BE INSTALLED BETWEEN BACK OF CURB AND FACE OF SIDEWALK AND NOT WITHIN SWALE/DITCH AREAS. THE DISTANCE RANGE FROM EDGE OF ADJACENT PAVEMENT, BACK OF CURB AND FACE OF SIDEWALK SHALL BE IN COMPLIANCE WITH LOCAL COUNTY FIRE DEPARTMENT RULES AND AS APPROVED BY JEA AND APPLICABLE PERMITTING AGENCIES. DISTANCE SHALL BE MEASURED TO THE CLOSEST PART OF THE FIRE HYDRANT (I.E. THE PUMPER NOZZLE). THE MAXIMUM DISTANCE (BACK OF CURB) SHALL BE IN COMPLIANCE WITH LOCAL COUNTY FIRE DEPARTMENT RULES AND AS APPROVED BY JEA. FOR OTHER LOCATION LIMITATIONS SEE PLATES W-10 AND W-11. IF PIPING BETWEEN TEE AND HYDRANT IS LONGER THAN 80 LF, AN ADDITIONAL 6" GATE VALVE IS REQUIRED AT THE HYDRANT LOCATION (PROVIDE 30" SEPARATION). ALL PIPING, VALVES AND FITTINGS ALONG THE HYDRANT BRANCH MAIN WHICH IS WITHIN 15 LF OF THE HYDRANT SHALL BE RESTRAINED UTILIZING ONLY TWO 3/4" DIA (THREADED ENDS) STEEL RODS AND EYE BOLTS (NO JOINT RESTRAINT DEVICES REQUIRED). A SPLIT SERRATED RING WITH RESTRAINT EARS (EBAA 15 PF06 or EQUAL) MAYBE USED IN THIS ASSEMBLY. ALL OTHER JOINTS ALONG THE HYDRANT BRANCH MAIN OUTSIDE OF THE FIRST 15 LF SHALL INCLUDE JOINT RESTRAINTS.

3. OPERATION OF THE FIRE HYDRANT SHALL BE EITHER FULL OPEN POSITION OR TOTALLY CLOSED POSITION. THE HYDRANT SHALL NOT BE UTILIZED TO THROTTLE OUTLET FLOW.

4. PRIOR TO PROJECT FINAL INSPECTION, THE HYDRANT AND ALL ABOVE GROUND PIPING SHALL BE RE-OILED, GREASED AND REPAINTED (RUS- KIL ENAMEL-INTERNATIONAL YELLOW OR EQUAL). PRIVATELY OWNED AND MAINTAINED FIRE HYDRANTS SHALL BE PAINTED RED.

5. FIRE HYDRANTS SHALL BE ORDERED WITH PROPER "BURY DEPTH" TO MEET ACTUAL FIELD CONDITIONS. THIS IS ESPECIALLY IMPORTANT FOR BRANCH LINES WHICH TEE-OFF A 12" OR LARGER WATER MAIN. UNLESS APPROVED OTHERWISE BY JEA, THE INSTALLATION OF (45°) BENDS IS NOT ACCEPTABLE WHEN UTILIZED TO CORRECT AN IMPROPERLY FURNISHED HYDRANT. THE USE OF HYDRANT EXTENSIONS SHOULD BE MINIMIZED.

6. BLUE REFLECTIVE MARKERS SHALL BE INSTALLED IN SUCH A MANNER THAT THE REFLECTIVE FACE OF THE MARKER IS PERPENDICULAR TO A LINE PARALLEL TO THE ROADWAY CENTERLINE. THE BLUE REFLECTIVE MARKERS SHALL BE PLACED IN THE CENTER OF THE TRAVEL LANE, DIRECTLY ACROSS FROM AND ADJACENT TO EACH FIRE HYDRANT.

FIRE HYDRANT INSTALLATION LIMITED SPACE

PLATE W-14

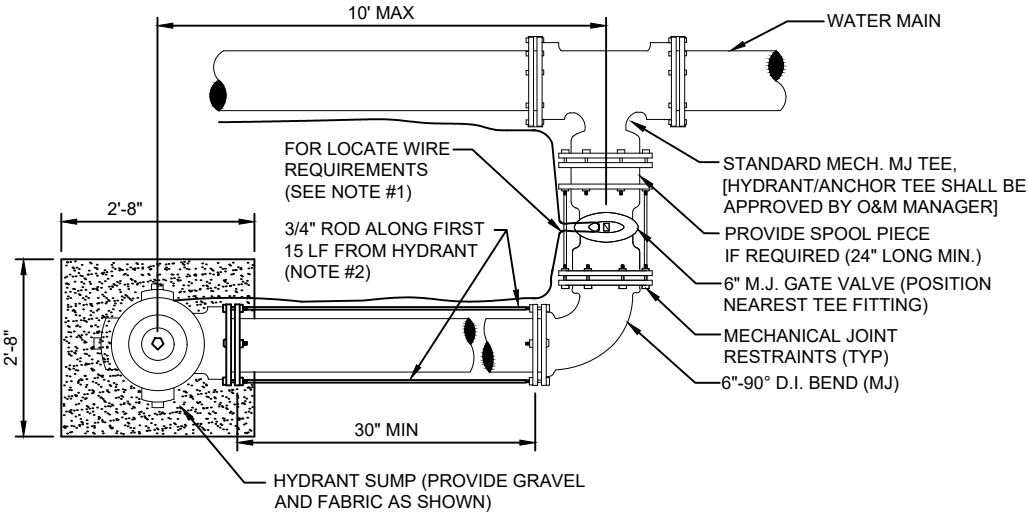

PLAN

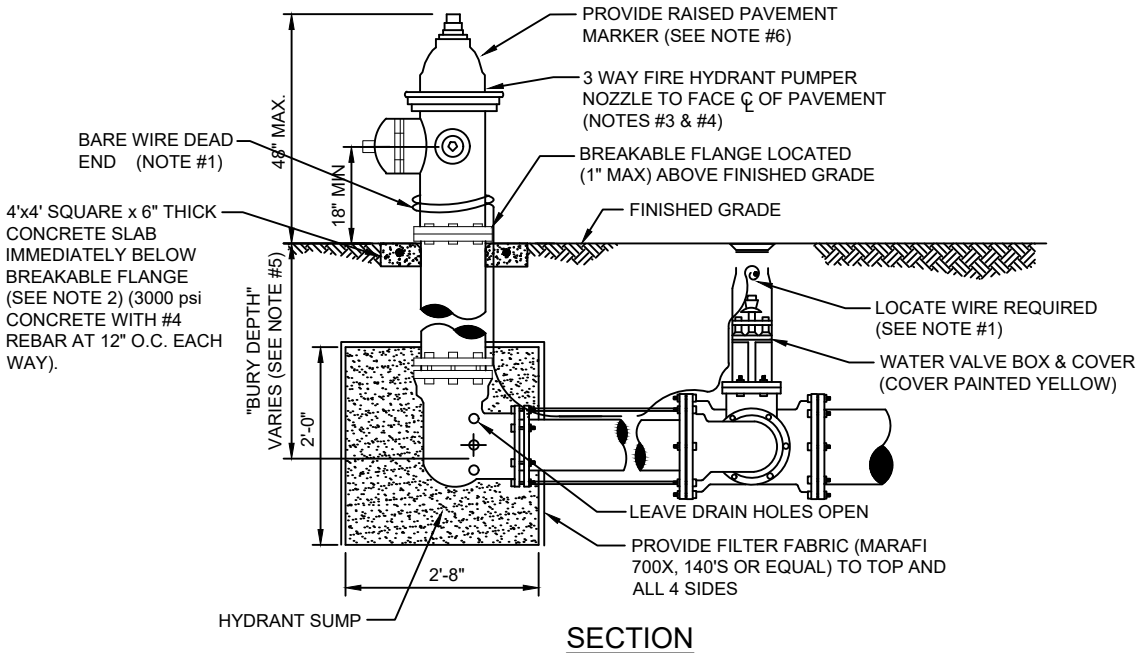

SECTION

NOTES:

1. LOCATE WIRE SHALL BE ROUTED FROM THE VALVE TO THE HYDRANT AS SHOWN ABOVE LEAVING ENOUGH SLACK TO REACH 4' ABOVE FINAL GRADE. THE END OF THE WIRE SHALL BE SECURED TO THE PIPE MAIN. SEE SECTION 350, LOCATE WIRE INSTALLATION PARAGRAPH.

2. FIRE HYDRANTS SHALL BE INSTALLED BETWEEN BACK OF CURB AND FACE OF SIDEWALK. ALL HYDRANTS SHALL BE LOCATED NO LESS THAN THREE (3) FEET FROM THE EDGE OF PAVEMENT OR BACK OF CURB OF THE ADJACENT ROADWAY AND NO LESS THAN THREE (3) FEET FROM ANY PHYSICAL FEATURE WHICH MAY OBSTRUCT ACCESS OR VIEW OF ANY HYDRANT UNLESS OTHERWISE APPROVED BY THE JEA. THE MAXIMUM DISTANCE (BACK OF CURB) SHALL BE IN COMPLIANCE WITH LOCAL COUNTY FIRE DEPARTMENT RULES AND AS APPROVED BY JEA. FOR OTHER LOCATION LIMITATIONS SEE PLATES W-10 AND W-11. IF PIPING BETWEEN TEE AND HYDRANT IS LONGER THAN 80 LF, AN ADDITIONAL 6" GATE VALVE IS REQUIRED AT THE HYDRANT LOCATION (PROVIDE 30" SEPARATION). ALL PIPING, VALVES AND FITTINGS ALONG THE HYDRANT BRANCH MAIN WHICH IS WITHIN 15 LF OF THE HYDRANT SHALL BE RESTRAINED UTILIZING ONLY TWO 3/4" DIA (THREADED ENDS) STEEL RODS AND EYE BOLTS (NO JOINT RESTRAINT DEVICES REQUIRED). A SPLIT SERRATED RING WITH RESTRAINT EARS (EBAA 15 PF06 or EQUAL) MAYBE USED IN THIS ASSEMBLY. ALL OTHER JOINTS ALONG THE HYDRANT BRANCH MAIN OUTSIDE OF THE FIRST 15 LF SHALL INCLUDE JOINT RESTRAINTS.

3. OPERATION OF THE FIRE HYDRANT SHALL BE EITHER FULL OPEN POSITION OR TOTALLY CLOSED POSITION. THE HYDRANT SHALL NOT BE UTILIZED TO THROTTLE OUTLET FLOW.

4. PRIOR TO PROJECT FINAL INSPECTION, THE HYDRANT AND ALL ABOVE GROUND PIPING SHALL BE RE-OILED, GREASED AND REPAINTED (RUS- KIL ENAMEL-INTERNATIONAL YELLOW OR EQUAL). PRIVATELY OWNED AND MAINTAINED FIRE HYDRANTS SHALL BE PAINTED RED.

5. FIRE HYDRANTS SHALL BE ORDERED WITH PROPER "BURY DEPTH" TO MEET ACTUAL FIELD CONDITIONS. THIS IS ESPECIALLY IMPORTANT FOR BRANCH LINES WHICH TEE-OFF A 12" OR LARGER WATER MAIN. UNLESS APPROVED OTHERWISE BY JEA, THE INSTALLATION OF (45°) BENDS IS NOT ACCEPTABLE WHEN UTILIZED TO CORRECT AN IMPROPERLY FURNISHED HYDRANT. THE USE OF HYDRANT EXTENSIONS SHOULD BE MINIMIZED.

6. BLUE REFLECTIVE MARKERS SHALL BE INSTALLED IN SUCH A MANNER THAT THE REFLECTIVE FACE OF THE MARKER IS PERPENDICULAR TO A LINE PARALLEL TO THE ROADWAY CENTERLINE. THE BLUE REFLECTIVE MARKERS SHALL BE PLACED IN THE CENTER OF THE TRAVEL LANE, DIRECTLY ACROSS FROM AND ADJACENT TO EACH FIRE HYDRANT.

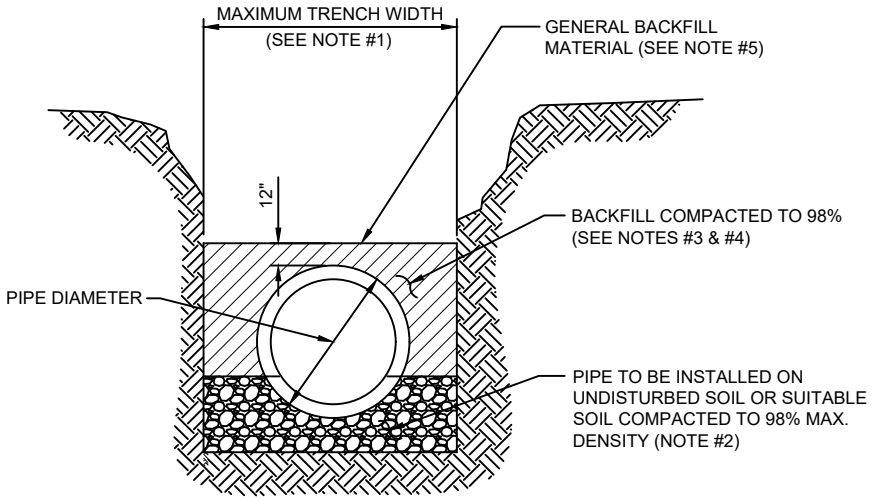

TYPICAL TRENCH

NOTES:

1. TRENCH SIDES SHALL BE APPROXIMATELY VERTICAL BETWEEN AN ELEVATION OF 1 FOOT ABOVE THE TOP OF THE PIPE AND THE CENTER LINE OF THE PIPE; OTHERWISE, TRENCH SIDES SHALL BE AS VERTICAL AS POSSIBLE OR AS REQUIRED BY OSHA STANDARDS. REFER TO THE MEASUREMENT AND PAYMENT SECTION (SECTION #801, PARAGRAPH #4)) TO DETERMINE MAXIMUM PAYLINE WIDTHS.

2. BELL HOLE SHALL BE DUG TO PERMIT THE ENTIRE STRAIGHT BARREL OF THE PIPE TO REST ON THE UNDISTURBED TRENCH BOTTOM. BOULDERS OR LOOSE ROCKS LARGER THAN 3/4 INCH IN SIZE WILL NOT BE PERMITTED IN BACKFILL UP TO 1 FOOT ABOVE THE TOP OF THE PIPE.

3. BACK FILL MATERIAL UP TO A LEVEL OF 1 FOOT OVER THE PIPE SHALL CONSIST OF AASHTO CLASS A-3 SOIL (SUITABLE SOIL) AND SHALL EXCLUDE CLAY MATERIALS AND LOOSE ROCKS LARGER THAN 3/4 INCH SIZE.

4. BACKFILL MATERIAL UP TO A LEVEL 1 FOOT OVER THE TOP OF PIPE OR BOTTOM OF STRUCTURES SHALL BE PLACED IN 6 INCH COMPACTED THICKNESS LAYERS AND SHALL BE COMPACTED TO 98% OF IT'S MAXIMUM DENSITY AS DETERMINED BY THE LABORATORY MODIFIED PROCTOR TEST, ASTM D1557.

5. SEE " EXCAVATION AND EARTHWORK", SECTION 408 FOR ADDITIONAL REQUIREMENTS INCLUDING REMOVAL AND REPLACEMENT OF UNSUITABLE SOILS, DEWATERING, COMPACTION REQUIREMENTS AND DENSITY TESTING OF COMPACTED SOILS.

OPEN CUT TRENCH FOR PRESSURE PIPE IN STATE ROAD RIGHT-OF-AWAY

PLATE W-42A

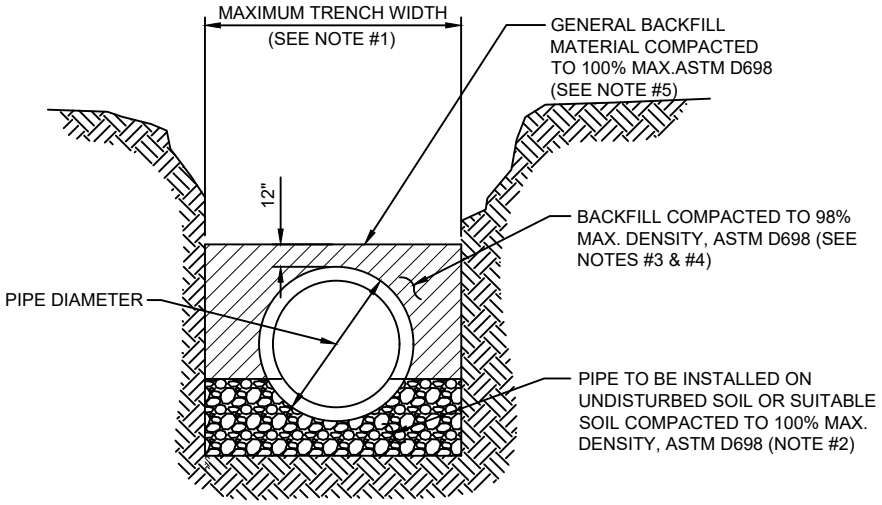

TYPICAL TRENCH

NOTES:

1. TRENCH SIDES SHALL BE APPROXIMATELY VERTICAL BETWEEN AN ELEVATION OF 1 FOOT ABOVE THE TOP OF THE PIPE AND THE CENTER LINE OF THE PIPE; OTHERWISE, TRENCH SIDES SHALL BE AS VERTICAL AS POSSIBLE OR AS REQUIRED BY OSHA STANDARDS. REFER TO THE MEASUREMENT AND PAYMENT SECTION (SECTION #801, PARAGRAPH #4)) TO DETERMINE MAXIMUM PAYLINE WIDTHS.

2. BELL HOLE SHALL BE DUG TO PERMIT THE ENTIRE STRAIGHT BARREL OF THE PIPE TO REST ON THE UNDISTURBED TRENCH BOTTOM. BOULDERS OR LOOSE ROCKS LARGER THAN 3/4 INCH IN SIZE WILL NOT BE PERMITTED IN BACKFILL UP TO 1 FOOT ABOVE THE TOP OF THE PIPE.

3. BACK FILL MATERIAL UP TO A LEVEL OF 1 FOOT OVER THE PIPE SHALL CONSIST OF AASHTO CLASS A-3 SOIL (SUITABLE SOIL) AND SHALL EXCLUDE CLAY MATERIALS AND LOOSE ROCKS LARGER THAN 3/4 INCH SIZE.

4. BACKFILL MATERIAL UP TO A LEVEL 1 FOOT OVER THE TOP OF PIPE OR BOTTOM OF STRUCTURES SHALL BE PLACED IN 6 INCH COMPACTED THICKNESS LAYERS AND SHALL BE COMPACTED TO 100% OF IT'S MAXIMUM DENSITY AS DETERMINED BY THE LABORATORY MODIFIED PROCTOR TEST, ASTM D698.

5. SEE " EXCAVATION AND EARTHWORK", SECTION 408 FOR ADDITIONAL REQUIREMENTS AND EXCEPTIONS INCLUDING REMOVAL AND REPLACEMENT OF UNSUITABLE SOILS, DEWATERING, COMPACTION REQUIREMENTS AND DENSITY TESTING OF COMPACTED SOILS.

FUSIBLE PVC PIPE ALLOWABLE BEND RADIUS AND PULLING FORCE

PLATE W-43

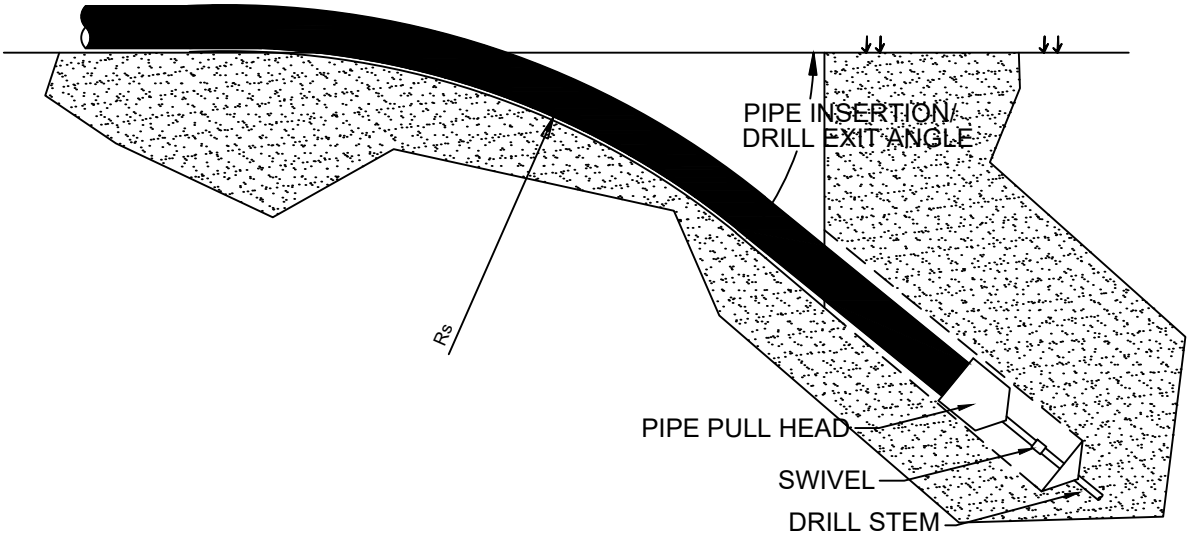

PIPE SIZE	MINIMUM ALLOWABLE BENDING RADIUS - Rs (FT)	MAXIMUM ALLOWABLE PULLING FORCE (DR18) (K-LBS)
4"	100	10
6"	144	21
8"	189	37
10"	231	56
12"	275	80

- PIPE SIZES GREATER THAN 12" SHALL BE HIGH DENSITY POLYETHYLENE (HDPE), CALCULATIONS SUPPLIED BY THE DESIGNED ENGINEER

DUAL DIRECTIONAL DRILLING

PLATE W-43A

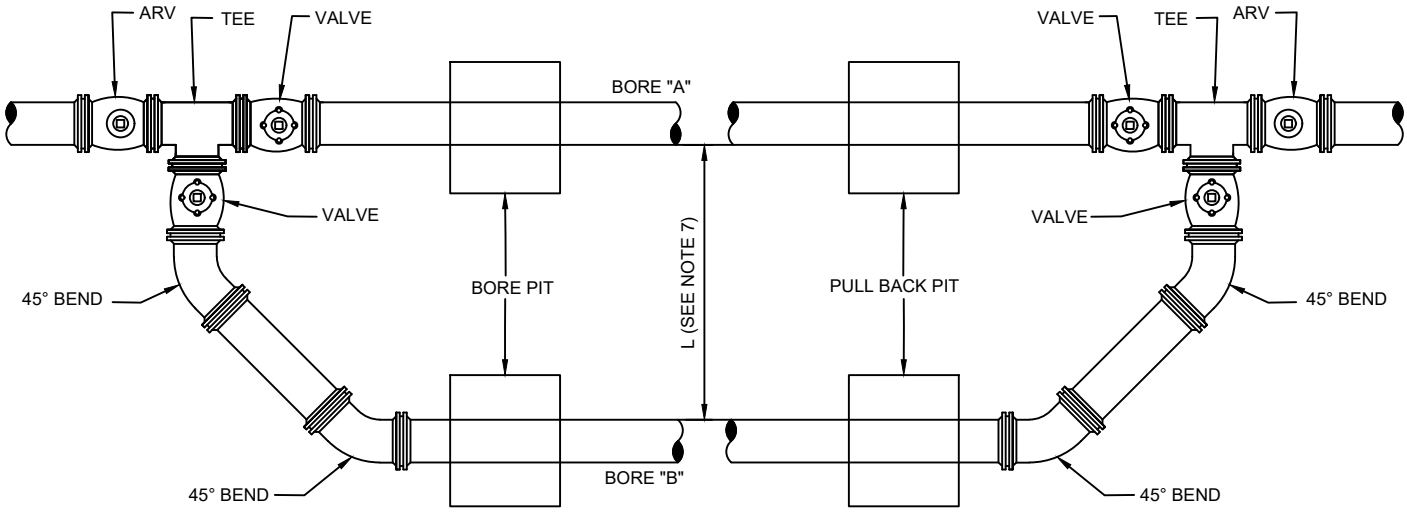

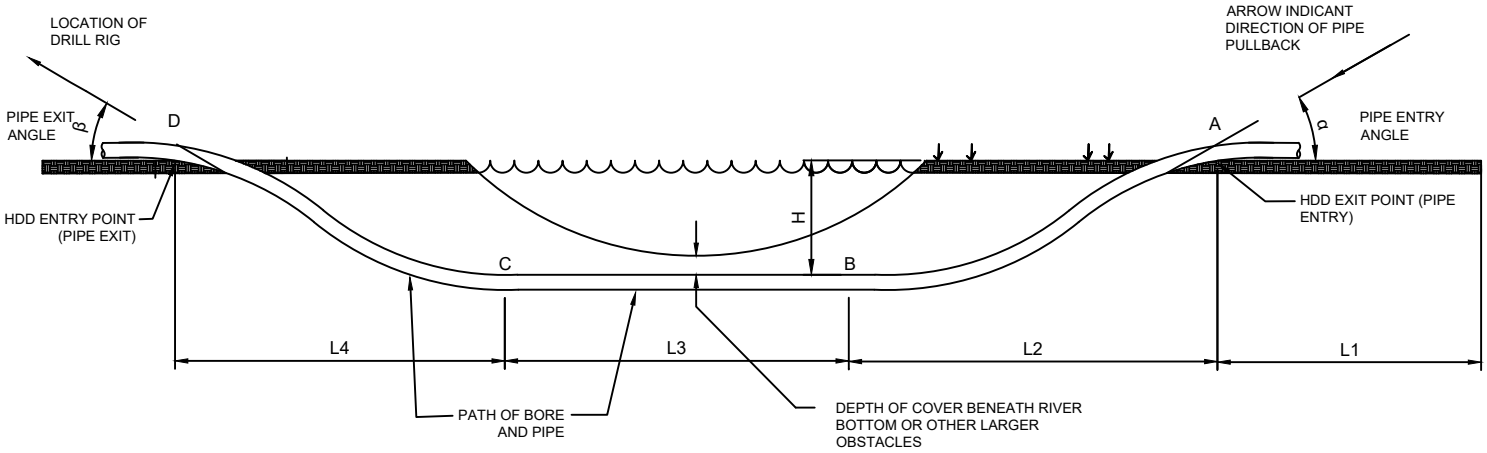

NOTES:

1. POINTS A, B, C, & D PULL FORCE ON PIPE.
2. L1-ADDIONAL LENGTH OF PIPE REQUIRED FOR HANDLING AND THERMAL CONTRACTION
3. L2-HORIZONAL DISTANCE TO ACHIEVE DESIRED DEPTH
4. L3-ADDITIONAL DISTANCE TO TRAVERSE AT DESIRED DEPTH
5. L-4 HORIZONTAL DISTANCE TO RISE TO SURFACE
6. H-DEPTH OFF BORE HOLE FROM GROUND SURFACE
7. HORIZONTAL AND VERTICAL DISTANCE BETWEEN BORE "A" TO BORE "B"

PVC PIPE RESTRAINT JOINT SCHEDULE

PLATE W-31A

LENGTH (L) TO BE RESTRAINED

(SEE PLATE Nos. 38C & 38D FOR ADDITIONAL DETAILS)

NOMINAL PIPE SIZE (IN.)	HORIZONTAL BENDS				VERTICAL OFFSETS 45° BENDS (SEE NOTE 4)		VALVES OR DEAD ENDS
	90° BENDS L (FT.)	45° BENDS L (FT.)	22.5° BENDS L (FT.)	11.25° BENDS L (FT.)	UPPER L (FT.)	LOWER L (FT.)	L (FT.)
4	21	9	5	3	17	3	47
6	30	13	6	3	23	4	66
8	38	16	8	4	30	6	86
10	45	19	9	5	36	7	103
12	53	22	11	6	43	8	121
14	61	26	13	6	50	9	140
16	66	28	14	7	55	10	154
18	73	30	15	8	60	11	170
20	79	33	16	8	66	12	186
24	79	33	16	8	77	15	185
30	93	39	19	10	97	17	222
36	106	39	21	11	107	20	257
42	117	49	24	12	120	24	289
48	144	53	26	13	133	26	321

REDUCERS	
SIZE (IN.)	L (FT.)
6x4	34
8x6	36
8x4	62
10x8	35
10x6	63
12x10	36
12x8	64
16x12	66
16x10	92
20x18	35
20x16	66
20x12	117
24x20	56
24x18	80
24x16	101
30x24	78
30x20	121
36x30	78
36x24	141
42x36	75
42x30	140
48x42	75
48x36	139

TEES SEE NOTE 5		
RUN SIZE (IN.)	BRANCH SIZE (IN.)	L (FT.)
4	4	F.O.
4	6 4 < LESS	10 F.O.
8	8 6 < LESS	29 F.O.
10	10 8 6 < LESS	45 13 F.O.
12	12 10 8 < LESS	62 32 F.O.
16	16 12 10 10 < LESS	94 39 5 F.O.
20	20 16 12 10 < LESS	125 76 14 F.O.
24	24 20 16 12 < LESS	124 84 36 F.O.
30	30 24 20 16 16 < LESS	159 104 60 5 F.O.
36	36 30 24 20 16 < LESS	192 142 83 33 F.O.
42	42 36 30 24 20 16 < LESS	223 178 124 59 5 F.O.
48	48 42 36 30 24 20 < LESS	253 209 162 104 34 F.O.

F.O. = FITTING ONLY

PVC PIPE RESTRAINT NOTES:

1. THIS SCHEDULE SHALL BE UTILIZED ON ALL WATER, SEWER FORCE MAIN OR RECLAIMED WATER SYSTEMS. ALL FITTINGS SHALL BE RESTRAINED TO LENGTHS INDICATED ON THE ABOVE SCHEDULE, AT A MINIMUM.
2. ASSUMPTIONS: PVC PIPE, SAFETY FACTOR=1.5, TEST PRESSURE=150PSI, SOIL=GM OR SM, TRENCH TYPE 3, DEPTH OF COVER=30 INCHES FOR 20" AND SMALLER PIPE SIZE OR 36 INCHES FOR 24" AND LARGER PIPE SIZE.
3. BENDS AND VALVES: SHALL BE RESTRAINED ON EACH SIDE OF FITTING.
4. VERTICAL OFFSETS: ARE APPROX. 3 FEET COVER ON TOP AND APPROX. 8 FEET COVER ON BOTTOM. PER THE DETAILS, Lu IS THE RESTRAINED LENGTH FOR THE UPPER (TOP) LEVEL. Li IS THE RESTRAINED LENGTH FOR THE LOWER (DEEPER) LEVEL. ASSUME 45 DEGREE BENDS.
5. TEES: TOTAL LENGTH BETWEEN FIRST JOINTS OR RESTRAINED LENGTH ON EITHER SIDE OF TEE (RUN) SHALL BE A TOTAL DISTANCE OF 30 FEET (MIN). SEE SCHEDULE ABOVE FOR RESTRAINT LENGTH ON TEE "BRANCH" LINE.
6. HDPE TO PVC TRANSITIONS: THE PVC PIPE SIDE SHALL BE RESTRAINED 35 FT (MIN).
7. THE INSTALLATION OF BELL HARNESS RESTRAINTS AT PVC JOINTS (DR-18 & 25 PIPE) SHALL BE COMPLETED PER THE MANUFACTURERS RECOMMENDATION, WHICH INCLUDES NOT OVER TIGHTENING THE PARALLEL RODS/NUTS. THESE NUTS SHOULD ONLY BE SNUG TIGHT. THE HOME MARKS ON THE PIPE SHOULD ALWAYS BE VISIBLE AFTER THE RESTRAINT IS INSTALLED. OVERHOMING THE JOINT MAY CAUSE A FAILURE AT THE BELL RESULTING IN A SERVICE OUTAGE.

DUCTILE IRON PIPE RESTRAINT JOINT SCHEDULE

PLATE W-31B

LENGTH (L) TO BE RESTRAINED

(SEE PLATE Nos. 38C & 38D FOR ADDITIONAL DETAILS)

NOMINAL PIPE SIZE (IN.)	HORIZONTAL BENDS				VERTICAL OFFSETS 45° BENDS (SEE NOTE 4)		VALVES OR DEAD ENDS
	90° BENDS L (FT.)	45° BENDS L (FT.)	22.5° BENDS L (FT.)	11.25° BENDS L (FT.)	UPPER L (FT.)	LOWER L (FT.)	L (FT.)
4	17	7	4	2	11	3	30
6	24	15	5	3	15	4	42
8	31	13	6	3	20	5	55
10	36	15	8	4	23	6	65
12	42	18	9	5	27	7	77
14	48	20	10	5	31	7	87
16	53	22	11	6	35	8	97
18	58	24	12	6	39	9	107
20	63	27	13	6	42	10	118
24	63	27	13	7	49	12	118
30	75	31	15	8	59	14	141
36	86	36	17	9	68	17	163
42	95	40	19	10	76	19	183
48	117	43	21	11	84	21	203

REDUCERS	
SIZE (IN.)	L (FT.)
6x4	22
8x6	23
8x4	39
10x8	22
10x6	40
12x10	23
12x8	41
16x12	42
16x10	58
20x18	22
20x16	42
20x12	74
24x20	36
24x18	51
24x16	64
30x24	50
30x20	77
36x30	50
36x24	89
42x36	48
42x30	89
48x42	48
48x36	88

TEE SEE NOTE 5		
RUN SIZE (IN.)	BRANCH SIZE (IN.)	L (FT.)
4	4	F.O.
4	6	6
	4 < LESS	F.O.
8	8	19
	6 < LESS	F.O.
10	10	29
	8	9
	6 < LESS	F.O.
12	12	40
	10	21
	8 < LESS	F.O.
16	16	60
	12	25
	10	3
	8 < LESS	F.O.
20	20	79
	16	48
	12	9
	10 < LESS	F.O.
24	24	79
	20	54
	16	23
	12 < LESS	F.O.
30	30	101
	24	66
	20	38
	16	4
	12 < LESS	F.O.
36	36	122
	30	90
	24	53
	20	21
	16	1
	12 < LESS	F.O.
42	42	141
	36	113
	30	79
	24	38
	20	3
	16	1
	12 < LESS	F.O.
48	48	160
	42	133
	36	103
	30	66
	24	22
	20 < LESS	F.O.

F.O. = FITTING ONLY

DUCTILE IRON PIPE RESTRAINT NOTES:

1. THIS SCHEDULE SHALL BE UTILIZED ON ALL WATER, SEWER FORCE MAIN OR RECLAIMED WATER SYSTEMS. ALL FITTINGS SHALL BE RESTRAINED TO LENGTHS INDICATED ON THE ABOVE SCHEDULE, AT A MINIMUM.
2. ASSUMPTIONS: DUCTILE IRON PIPE (WITHOUT POLY WRAP), SAFETY FACTOR=1.5, TEST PRESSURE=150PSI, SOIL=GM OR SM, TRENCH TYPE 3, DEPTH OF COVER=30 INCHES FOR 20" AND SMALLER PIPE SIZE OR 36 INCHES FOR 24" AND LARGER PIPE SIZE. FOR D.I.P. W/POLY WRAP, USE RESTRAINT JOINT SCHEDULE FOR PVC PIPE.
3. BENDS AND VALVES: SHALL BE RESTRAINED ON EACH SIDE OF FITTING.
4. VERTICAL OFFSETS: ARE APPROX. 3 FEET COVER ON TOP AND APPROX. 8 FEET COVER ON BOTTOM. PER THE DETAILS, Lu IS THE RESTRAINED LENGTH FOR THE UPPER (TOP) LEVEL. Li IS THE RESTRAINED LENGTH FOR THE LOWER (DEEPER) LEVEL. ASSUME 45 DEGREE BENDS.
5. TEES: TOTAL LENGTH BETWEEN FIRST JOINTS OR RESTRAINED LENGTH ON EITHER SIDE OF TEE (RUN) SHALL BE A TOTAL DISTANCE OF 30 FEET (MIN). SEE SCHEDULE ABOVE FOR RESTRAINT LENGTH ON TEE "BRANCH" LINE.
6. HDPE TO D.I.P. TRANSITIONS: THE D.I.P. PIPE SIDE SHALL BE RESTRAINED 35 FT (MIN).

MECHANICAL RESTRAINT DETAILS - I

PLATE W-31C

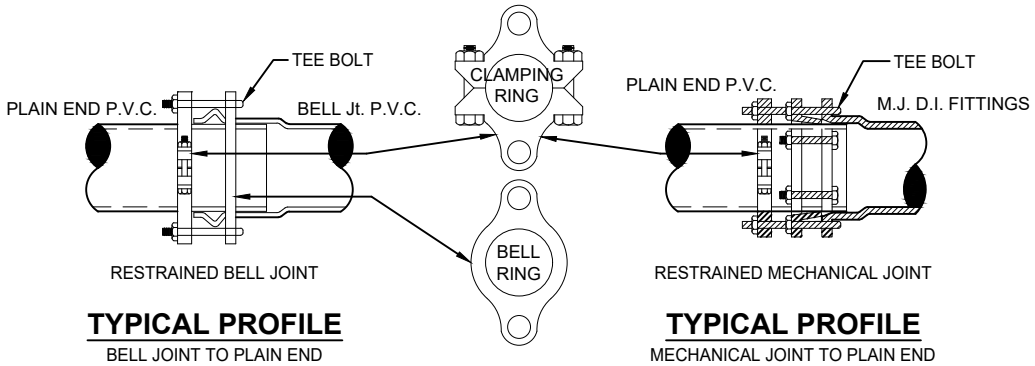

RESTRAINED BELL JOINT

TYPICAL PROFILE

BELL JOINT TO PLAIN END
W/MECHANICAL RESTRAINERS

SECTION

RESTRAINED MECHANICAL JOINT

TYPICAL PROFILE

MECHANICAL JOINT TO PLAIN END
W/MECHANICAL RESTRAINERS

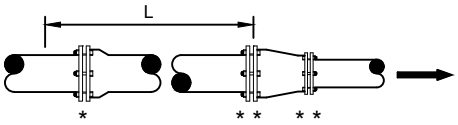

REDUCER

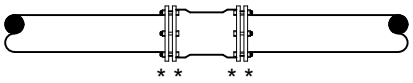

MECHANICAL JOINT SLEEVES

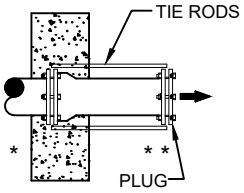

NO. OF TIE RODS REQUIRED

3" - 8"	DIAMETER MAIN - 2 TIE RODS REQUIRED PER JOINT (3/4" ROD)
10" - 12"	DIAMETER MAIN - 4 TIE RODS REQUIRED PER JOINT (3/4" ROD)
14" - 16"	DIAMETER MAIN - 6 TIE RODS REQUIRED PER JOINT (3/4" ROD)
18" - 20"	DIAMETER MAIN - 8 TIE RODS REQUIRED PER JOINT (3/4" ROD)
24"	DIAMETER MAIN - 12 TIE RODS REQUIRED PER JOINT (3/4" ROD)
30" - 36"	DIAMETER MAIN - 14 TIE RODS REQUIRED PER JOINT (1" ROD)
42" - 48"	DIAMETER MAIN - 16 TIE RODS REQUIRED PER JOINT (1 1/4" ROD)
54"	DIAMETER MAIN - 18 TIE RODS REQUIRED PER JOINT (1 1/4" ROD)

DEAD - END THRUST COLLAR ANCHOR

TO BE USED INSTEAD OF TOTAL RESTRAINED LENGTH (OPTIONAL) SIZE
AS PER THRUST BLOCK DETAIL (W-38). SEE DETAILS W-36 & W-37.

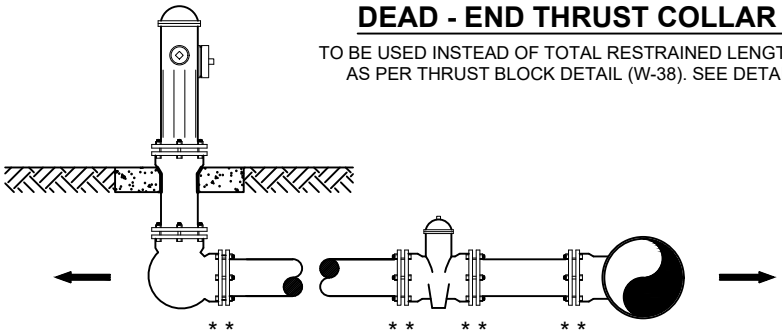

FIRE HYDRANT LATERAL

GENERAL NOTE:

1. PAY ITEM " * " DENOTES A RESTRAINT WHICH IS PAID FOR ON A PER EACH BASIS.
2. PAY ITEM " ** " DENOTES A RESTRAINT WHICH IS INCLUDED IN THE UNIT PRICE BID FOR FITTING OR VALVE.
3. ➡ INDICATES DIRECTION OF THRUST FORCE.

MECHANICAL RESTRAINT DETAILS - II

PLATE W-31D

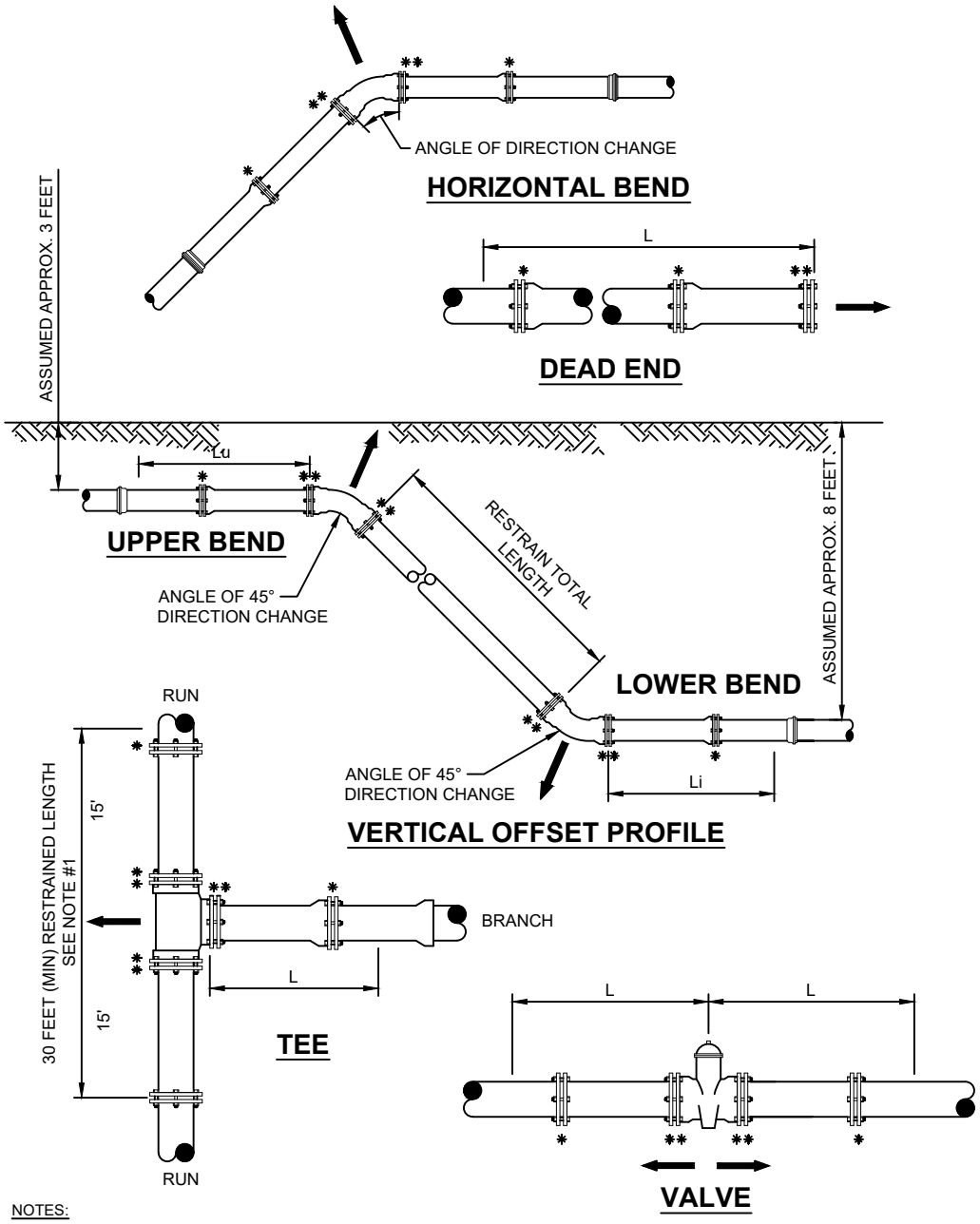

NOTES:

1. TOTAL LENGTH BETWEEN FIRST JOINTS OR RESTRAINED LENGTH ON EITHER SIDE OF TEE (RUN) SHALL BE A TOTAL DISTANCE OF 30 FEET (MIN.).
2. PAY ITEM "*" DENOTES A RESTRAINT WHICH IS PAID FOR ON A PER EACH BASIC.
3. PAY ITEM "**" DENOTES A RESTRAINT WHICH IS INCLUDED IN THE UNIT PRICE BID FOR FITTING OR VALVE.

PLUGGED DEAD END USING TIE RODS

PLATE W-36

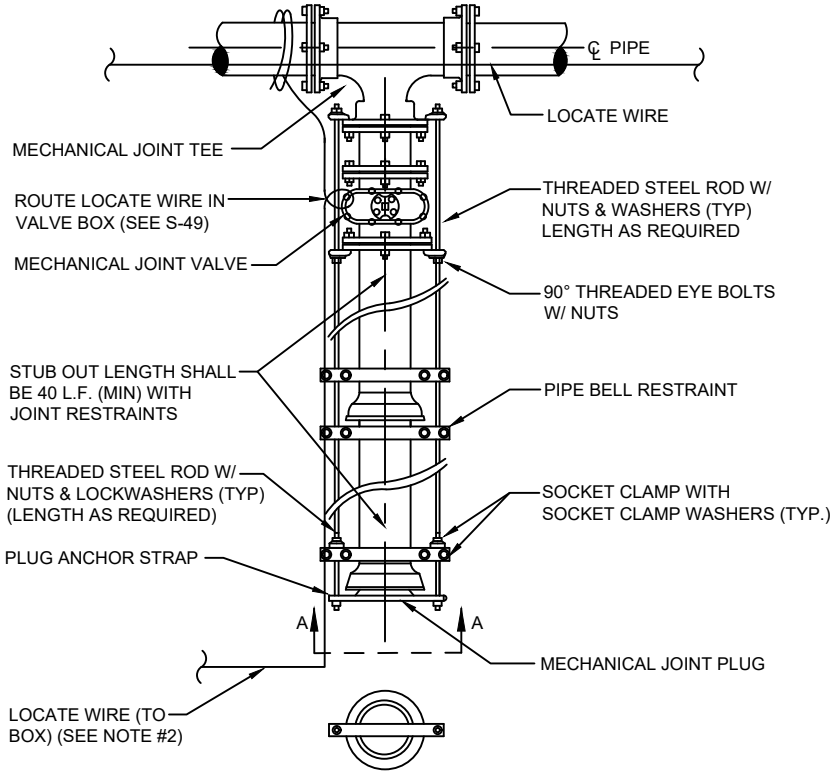

SECTION "A-A"

NOTES:

1. IN LIEU OF BELL/ROD RESTRAINTS, MECHANICAL JOINT RESTRAINTS MAY BE USED.
2. LOCATING WIRE REQUIRED, UTILIZING A LOCATE WIRE BOX INSTALLED AT PLUG LOCATION.
3. NUMBER OF TIE RODS REQUIRED IS AS FOLLOWS:

3" - 8"	DIAMETER MAIN - 2 TIE RODS REQUIRED PER JOINT (3/4" ROD)
10" - 12"	DIAMETER MAIN - 4 TIE RODS REQUIRED PER JOINT (3/4" ROD)
14" - 16"	DIAMETER MAIN - 6 TIE RODS REQUIRED PER JOINT (3/4" ROD)
18" - 20"	DIAMETER MAIN - 8 TIE RODS REQUIRED PER JOINT (3/4" ROD)
24"	DIAMETER MAIN -12 TIE RODS REQUIRED PER JOINT (3/4" ROD)
30" - 36"	DIAMETER MAIN -14 TIE RODS REQUIRED PER JOINT (1" ROD)
42" - 48"	DIAMETER MAIN -16 TIE RODS REQUIRED PER JOINT (1 1/4" ROD)
54"	DIAMETER MAIN -18 TIE RODS REQUIRED PER JOINT (1 1/4" ROD)

4. THE LOCATION OF THE DEAD END PLUG SHALL NOT BE UNDER PAVEMENT, IF POSSIBLE. THE STUB OUT SHALL EXTEND BEYOND THE INTERSECTION AREAS OR ROAD CROSSING BY 10 FEET (MIN.) WHERE POSSIBLE.

PLUGGED DEAD END USING MECHANICAL RESTRAINTS

PLATE W-37

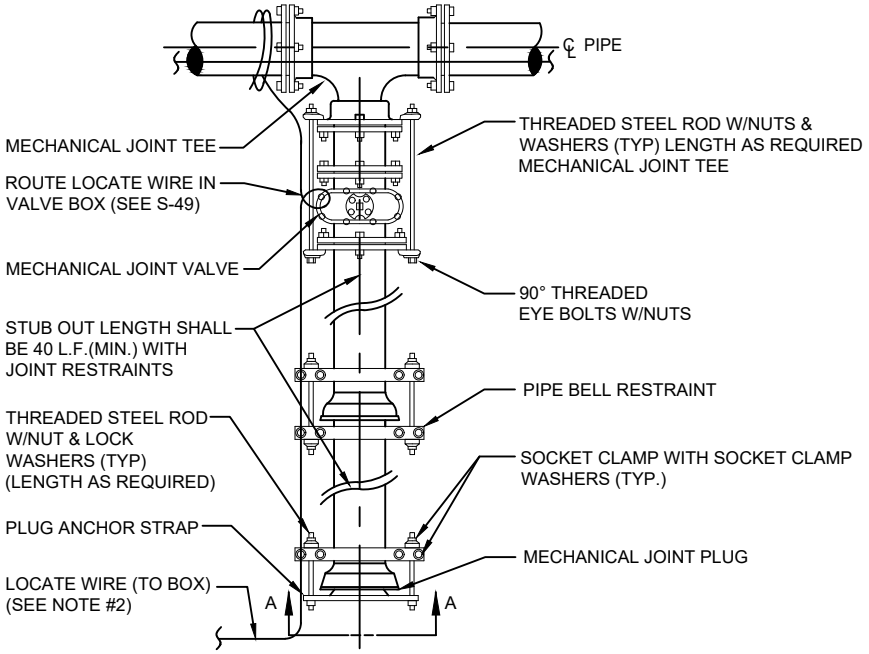

PLAN

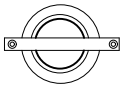

SECTION "A-A"

NOTES:

1. IN LIEU OF BELL/ROD RESTRAINTS, MECHANICAL JOINT RESTRAINTS MAY BE USED.
2. LOCATING WIRE REQUIRED, UTILIZING A LOCATE WIRE BOX INSTALLED AT PLUG LOCATION.
3. NUMBER OF TIE RODS REQUIRED IS AS FOLLOWS:

3" - 8"	DIAMETER MAIN - 2 TIE RODS REQUIRED PER JOINT (3/4" ROD)
10" - 12"	DIAMETER MAIN - 4 TIE RODS REQUIRED PER JOINT (3/4" ROD)
14" - 16"	DIAMETER MAIN - 6 TIE RODS REQUIRED PER JOINT (3/4" ROD)
18" - 20"	DIAMETER MAIN - 8 TIE RODS REQUIRED PER JOINT (3/4" ROD)
24"	DIAMETER MAIN -12 TIE RODS REQUIRED PER JOINT (3/4" ROD)
30" - 36"	DIAMETER MAIN -14 TIE RODS REQUIRED PER JOINT (1" ROD)
42" - 48"	DIAMETER MAIN -16 TIE RODS REQUIRED PER JOINT (1 1/4" ROD)
54"	DIAMETER MAIN -18 TIE RODS REQUIRED PER JOINT (1 1/4" ROD)

4. THE LOCATION OF THE DEAD END PLUG SHALL NOT BE UNDER PAVEMENT, IF POSSIBLE. THE STUB OUT SHALL EXTEND BEYOND THE INTERSECTION AREAS OR ROAD CROSSING BY 10 FEET (MIN.) WHERE POSSIBLE.

THRUST BLOCK SIZE CHART

PLATE W-38

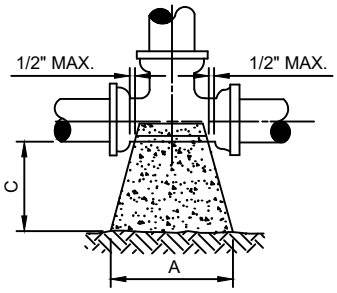

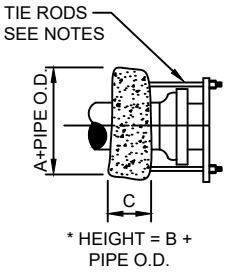

THRUST BLOCK FOR TEES & PLUGS				
SIZE	90° BEND			S.F. BEARING SURFACE
	A	B	C	
4"	16"	16"	18"	1.78
6"	20"	24"	18"	3.33
8"	26"	32"	18"	5.78
10"	32"	40"	18"	8.89
12"	36"	48"	24"	12.00
14"	40"	56"	24"	15.56
16"	48"	60"	24"	20.00
18"	56"	64"	24"	24.89
20"	60"	76"	24"	31.67
24"	72"	90"	24"	45.00
30"	86"	102"	24"	60.67
36"	116"	108"	24"	86.11

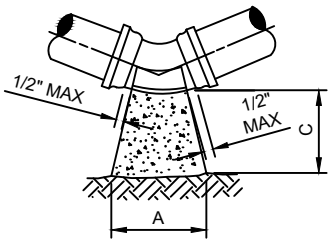

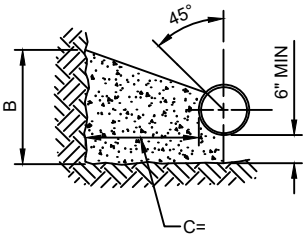

THRUST BLOCK FOR BENDS																
SIZE	90° BEND			S.F. BEARING SURFACE	45° BEND			S.F. BEARING SURFACE	22-1/2° BEND			S.F. BEARING SURFACE	11-1/4° BEND			S.F. BEARING SURFACE
	A	B	C		A	B	C		A	B	C		A	B	C	
4"	16"	16"	18"	1.78	14"	16"	18"	1.56	14"	16"	18"	1.56	14"	16"	18"	1.56
6"	22"	32"	18"	4.89	16"	18"	18"	2.00	14"	16"	18"	1.56	14"	16"	18"	1.56
8"	32"	36"	18"	8.00	24"	28"	18"	4.67	16"	18"	18"	2.00	14"	16"	18"	1.56
10"	36"	46"	18"	11.50	26"	36"	18"	6.50	20"	24"	18"	3.33	14"	18"	18"	1.75
12"	44"	56"	24"	17.11	32"	40"	24"	8.89	24"	30"	24"	5.00	16"	20"	24"	2.22
14"	52"	62"	24"	22.39	36"	48"	24"	12.00	26"	36"	24"	6.50	20"	24"	24"	3.33
16"	58"	72"	24"	29.00	40"	54"	24"	15.00	32"	38"	24"	8.44	22"	26"	24"	3.97
18"	64"	80"	24"	35.56	46"	60"	24"	19.17	36"	42"	24"	10.50	24"	32"	24"	5.33
20"	72"	88"	24"	44.00	52"	66"	24"	23.83	38"	48"	24"	12.67	26"	36"	24"	6.50
24"	96"	96"	24"	36.89	64"	78"	24"	34.67	46"	56"	24"	17.89	32"	40"	24"	8.89
30"	122"	102"	24"	86.11	72"	94"	24"	47.00	56"	62"	24"	24.11	36"	48"	24"	12.00
36"	166"	104"	24"	123.33	88"	108"	24"	66.00	64"	78"	24"	34.67	44"	54"	24"	16.50

NOTES:

1. ALL BEARING SURFACES TO BE CARRIED TO UNDISTURBED SOIL.
2. THESE TABLES SHOW MINIMUM SIZES FOR THRUST BLOCKS IN GOOD SOIL (A-1 THRU A-3, CLEAN SANDS AND GRAVELS) WITH MINIMUM BEARING CAPACITY OF 2000 psi.
3. POOR SOILS A-4 THRU A-8, SILTY SOILS, CLAYS, MUCK AND PEAT WILL REQUIRE LARGER THRUST BLOCKING.
4. BOTH CONCRETE THRUST BLOCKS AND TIE RODS MUST BE USED WHEN, IN THE JUDGEMENT OF THE ENGINEER, THE NATURE AND CRITICALITY OF AN INSTALLATION IS SUCH AS TO REQUIRE POSITIVE ASSURANCE OF STABILITY.
5. THE USE OF THRUST BLOCKS SHALL BE LIMITED TO SITUATIONS SUCH AS POINT REPAIR WHERE EXPOSING SEVERAL JOINTS OF PIPE IS NOT FEASIBLE DUE TO EXISTING GROUND CONDITIONS.
6. CONCRETE COLLARS WITH TIE RODS MAY BE USED ON DEAD END LINES AT THE CONTRACTOR'S DISCRETION. NUMBER OF TIE RODS REQUIRED IS AS FOLLOWS:

3" - 8"	DIAMETER MAIN - 2 TIE RODS REQUIRED PER JOINT (3/4" ROD)
10" - 12"	DIAMETER MAIN - 4 TIE RODS REQUIRED PER JOINT (3/4" ROD)
14" - 16"	DIAMETER MAIN - 6 TIE RODS REQUIRED PER JOINT (3/4" ROD)
18" - 20"	DIAMETER MAIN - 8 TIE RODS REQUIRED PER JOINT (3/4" ROD)
24"	DIAMETER MAIN -12 TIE RODS REQUIRED PER JOINT (3/4" ROD)
30" - 36"	DIAMETER MAIN -14 TIE RODS REQUIRED PER JOINT (1" ROD)
42" - 48"	DIAMETER MAIN -16 TIE RODS REQUIRED PER JOINT (1 1/4" ROD)
54"	DIAMETER MAIN -18 TIE RODS REQUIRED PER JOINT (1 1/4" ROD)

7. MAXIMUM TEST PRESSURE TO BE 150 PSI.

HORIZONTAL & VERTICAL SEPARATION REQUIREMENTS

	PROPOSED UTILITY											
	POTABLE WATER			WASTEWATER GRAVITY AND FORCE MAIN			RECLAIMED WATER			VACUUM SEWERS		
CONFLICTING UTILITY	HORIZ.	VERT.	JOINT SPACING*	HORIZ.	VERT.	JOINT SPACING*	HORIZ.	VERT.	JOINT SPACING*	HORIZ.	VERT.	JOINT SPACING*
POTABLE WATER	3' NOTE 1	12"	3' NOTE 2	6' to 10'	12" NOTE 5	6' NOTE 2	3'	12"	6' NOTE 2	3' to 10'	12"	3' NOTE 2
RECLAIMED WATER	3'	12"	6' NOTE 2	3' NOTE 1	12"	3' NOTE 2	3'	12"	6' NOTE 2	3' NOTE 1	12"	3' NOTE 2
WASTEWATER (GRAVITY AND FORCE MAIN)	6' to 10'	12"	6' NOTE 2	3' NOTE 1	12"	6"	3' NOTE 1	12"	3' NOTE 2	3' NOTE 1	12"	3' NOTE 2
VACUUM SEWERS	3' to 10'	12"	3' NOTE 2	3' NOTE 1	12"	6"	3' NOTE 1	12"	3' NOTE 2	3' NOTE 1	12"	3' NOTE 2
RIGHT OF WAYS	3' NOTE 1	N/A	N/A	3' NOTE 1	N/A	N/A	3' NOTE 1	N/A	N/A	3' NOTE 1	N/A	N/A
PERMANENT STRUCTURES (BUILDINGS, SIGNS, POLES, ETC.)	SEE NOTE 7	N/A	N/A	SEE NOTE 7	N/A	N/A	SEE NOTE 7	N/A	N/A	SEE NOTE 7	N/A	N/A
STORM SEWERS	3' NOTE 1	12"	3' NOTE 2	3' NOTE 1	12"	3' NOTE 2	3' NOTE 1	12"	3' NOTE 2	3' NOTE 1	12"	3' NOTE 2
GAS	3' NOTE 1	12"	3' NOTE 2	3' NOTE 1	12"	3' NOTE 2	3' NOTE 1	12"	3' NOTE 2	3' NOTE 1	12"	3' NOTE 2
TREES	3'-6' NOTE 6	N/A	N/A	3'-6' NOTE 6	N/A	N/A	3'-6' NOTE 6	N/A	N/A	3'-6' NOTE 6	N/A	N/A
ALL OTHER UTILITIES	3' NOTE 1	12"	3' NOTE 2	3' NOTE 1	12"	3' NOTE 2	3' NOTE 1	12"	3' NOTE 2	3' NOTE 1	12"	3' NOTE 2

NOTES:

1. THIS SEPARATION REQUIREMENT IS TO PROVIDE ACCESSIBILITY FOR CONSTRUCTION AND MAINTENANCE. THREE FEET OF HORIZONTAL SEPARATION IS THE MINIMUM FOR PIPES WITH THREE FEET OF COVER. FOR PIPES INSTALLED AT GREATER DEPTH, PROVIDE AN ADDITIONAL FOOT OF SEPARATION FOR EACH ADDITIONAL FOOT OF DEPTH.
2. THE MINIMUM JOINT SPACING REQUIRED FROM CROSSING FROM OTHER UTILITIES WHILE STILL MAINTAINING MINIMUM VERTICAL SEPARATION.
3. DISTANCES GIVEN ARE FROM OUTSIDE OF PIPE TO OUTSIDE OF PIPE.
4. NO WATER PIPE SHALL PASS THROUGH OR COME INTO CONTACT WITH ANY PART OF SANITARY OR STORM WATER MANHOLE OR STRUCTURES.
5. WATER MAIN SHOULD CROSS ABOVE OTHER PIPES WHENEVER POSSIBLE. WHEN WATER MAIN MUST BE BELOW OTHER UTILITY PIPING, THE MINIMUM SEPARATION SHALL BE 12 INCHES.
6. REFER TO POTABLE WATER PIPING- SECTION 350, III.4.11.
7. SEE SECTION 350, III.4.10 FOR MINIMUM SEPARATION REQUIREMENTS FROM PIPE TO STRUCTURES.

WATER MAIN AND NON-WATER MAIN SEPARATION REQUIREMENTS - NOTES

1. IT IS REQUIRED THAT “WATER MAINS” BE INSTALLED, CLEANED, DISINFECTED AND HAVE A SATISFACTORY BACTERIOLOGICAL SURVEY PERFORMED IN ACCORDANCE WITH THE LATEST APPLICABLE AWWA STANDARDS, CHAPTER 62-555, F.A.C. AND LATEST JEA WATER AND SEWER STANDARDS. FOR THE PURPOSE OF THIS SECTION, THE PHRASE “WATER MAINS” SHALL MEAN MAINS, INCLUDING TREATMENT PLANT PROCESS PIPING, CONVEYING EITHER RAW, PARTIALLY TREATED, OR FINISHED DRINKING WATER; FIRE HYDRANT LEADS; AND SERVICE LINES THAT HAVE AN INSIDE DIAMETER OF THREE (3) INCHES OR GREATER. IN ADDITION, THE PHRASE “RECLAIMED WATER” REFERS TO THE WATER REGULATED UNDER PART III OF CHAPTER 62-610, F.A.C.

2. NEW OR RELOCATED, UNDERGROUND WATER MAINS SHALL BE LAID TO PROVIDE A HORIZONTAL DISTANCE OF AT LEAST THREE (3) FEET BETWEEN THE OUTSIDE OF THE WATER MAIN AND THE OUTSIDE OF ANY EXISTING OR PROPOSED STORM SEWER, STORMWATER FORCE MAIN, OR PIPELINE CONVEYING RECLAIMED WATER.

3. NEW OR RELOCATED, UNDERGROUND WATER MAINS SHALL BE LAID TO PROVIDE A HORIZONTAL DISTANCE OF AT LEAST SIX (6) FEET, AND PREFERABLY TEN (10) FEET, BETWEEN THE OUTSIDE OF THE WATER MAIN AND THE OUTSIDE OF ANY EXISTING OR PROPOSED GRAVITY OR PRESSURE-TYPE SANITARY SEWER, WASTEWATER FORCE MAIN, OR PIPELINE CONVEYING RECLAIMED WATER. THE MINIMUM HORIZONTAL SEPARATION DISTANCE BETWEEN WATER MAINS AND GRAVITY-TYPE SANITARY SEWERS MAY BE REDUCED TO THREE (3) FEET WHERE THE BOTTOM OF THE WATER MAIN IS LAID AT LEAST SIX (6) INCHES ABOVE THE TOP OF THE SEWER (SPECIAL CASE).

4. NEW OR RELOCATED, UNDERGROUND WATER MAINS CROSSING ANY EXISTING OR PROPOSED GRAVITY OR VACUUM-TYPE SANITARY SEWER OR STORM SEWER SHALL BE LAID SO THE OUTSIDE OF THE WATER MAIN IS AT LEAST SIX (6) INCHES, AND PREFERABLE TWELVE (12) INCHES, ABOVE OR AT LEAST TWELVE (12) INCHES BELOW THE OUTSIDE OF THE OTHER PIPELINE. HOWEVER, IT IS PREFERABLE TO LAY THE WATER MAIN ABOVE THE OTHER PIPELINE.

5. NEW OR RELOCATED, UNDERGROUND WATER MAINS CROSSING ANY EXISTING OR PROPOSED PRESSURE-TYPE SANITARY SEWER, WASTEWATER OR STORMWATER FORCE MAIN, OR PIPELINE CONVEYING RECLAIMED WATER SHALL BE LAID SO THE OUTSIDE OF THE WATER MAIN IS A LEAST TWELVE (12) INCHES ABOVE OR BELOW THE OUTSIDE OF THE OTHER PIPELINE. HOWEVER, IT IS PREFERABLE TO LAY THE WATER MAIN ABOVE THE OTHER PIPELINE.

6. AT THE UTILITY CROSSINGS DESCRIBED IN NOTES 4 AND 5 ABOVE, ONE FULL LENGTH OF WATER MAIN PIPE SHALL BE CENTERED ABOVE OR BELOW THE OTHER PIPELINE SO THE WATER MAIN JOINTS WILL BE AS FAR AS POSSIBLE FROM THE OTHER PIPELINE. ALTERNATIVELY, AT SUCH CROSSINGS, THE PIPES SHALL BE ARRANGED SO THAT ALL WATER MAIN JOINTS ARE AT LEAST THREE (3) FEET FROM ALL JOINTS IN VACUUM-TYPE SANITARY SEWERS, STORM SEWERS, STORMWATER FORCE MAINS, OR PIPELINES CONVEYING RECLAIMED WATER, AND AT LEAST SIX (6) FEET FROM ALL JOINTS IN GRAVITY OR PRESSURE-TYPE SANITARY SEWERS, WASTEWATER FORCE MAINS, OR PIPELINE CONVEYING RECLAIMED WATER.

7. NEW OR RELOCATED FIRE HYDRANTS SHALL BE LOCATED SO THAT THE HYDRANTS ARE AT LEAST THREE (3) FEET FROM ANY EXISTING OR PROPOSED STORM SEWER, STORMWATER FORCE MAIN, OR PIPELINE CONVEYING RECLAIMED WATER; AT LEAST THREE (3) FEET, AND PREFERABLY TEN (10) FEET, FROM ANY EXISTING OR PROPOSED VACUUM-TYPE SANITARY SEWER; AT LEAST SIX (6) FEET, AND PREFERABLY TEN (10) FEET, FROM ANY EXISTING OR PROPOSED GRAVITY OR PRESSURE-TYPE SANITARY SEWER OR WASTEWATER FORCE MAIN.

8. WHERE AN UNDERGROUND WATER MAIN IS BEING LAID LESS THAN THE REQUIRED MINIMUM HORIZONTAL DISTANCE FROM ANOTHER PIPELINE AND WHERE AN UNDERGROUND WATER MAIN IS CROSSING ANOTHER PIPELINE AND JOINTS IN THE WATER MAIN ARE BEING LOCATED LESS THAN THE REQUIRED MINIMUM DISTANCE FROM JOINTS IN THE OTHER PIPELINE, THE CONTRACTOR SHALL CONSULT THE DESIGN ENGINEER TO OBTAIN APPROVAL OF ANY ALTERNATIVE CONSTRUCTION METHODS, PRIOR TO CONSTRUCTION.

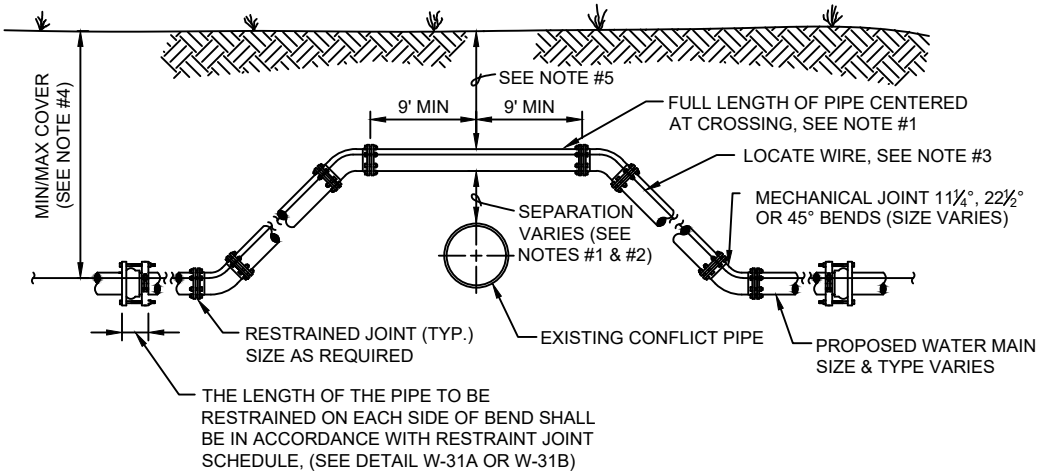

CASE "A" CROSSING

NOTES:

1. THE SOILS BETWEEN THE NEW MAIN AND THE CONFLICT PIPE SHALL BE COMPACTED TO 98% OF THE MAXIMUM DENSITY AS DETERMINED BY THE LABORATORY MODIFIED PROCTOR TEST, ASTM D 1557.
2. FOR MINIMUM VERTICAL SEPARATION REQUIREMENTS SEE DETAIL (W-10 AND W-11).
3. LOCATING WIRE REQUIRED: SEE DETAIL W-44.
4. THE COVER FOR PIPING LESS THAN 24" SIZE SHALL BE 30" (MIN) IN UNPAVED AREAS, 36" (MIN) IN PAVED AREAS AND A MAXIMUM COVER OF 60", UNLESS APPROVED BY JEA. THE COVER FOR PIPING 24" SIZE AND LARGER SHALL BE 36" (MIN) IN PAVED AND UNPAVED AREAS AND A MAXIMUM COVER OF 84", UNLESS APPROVED BY JEA.
5. IF UTILITY CONFLICT IS LOCATED IN A NON-TRAFFIC AREA (NO TRAFFIC LOADS) AND THE NEW PIPE IS D.I.P., THEN THE MINIMUM COVER MAY BE REDUCED TO 24 INCHES (ONLY IN THE AREA OF THE CONFLICT).

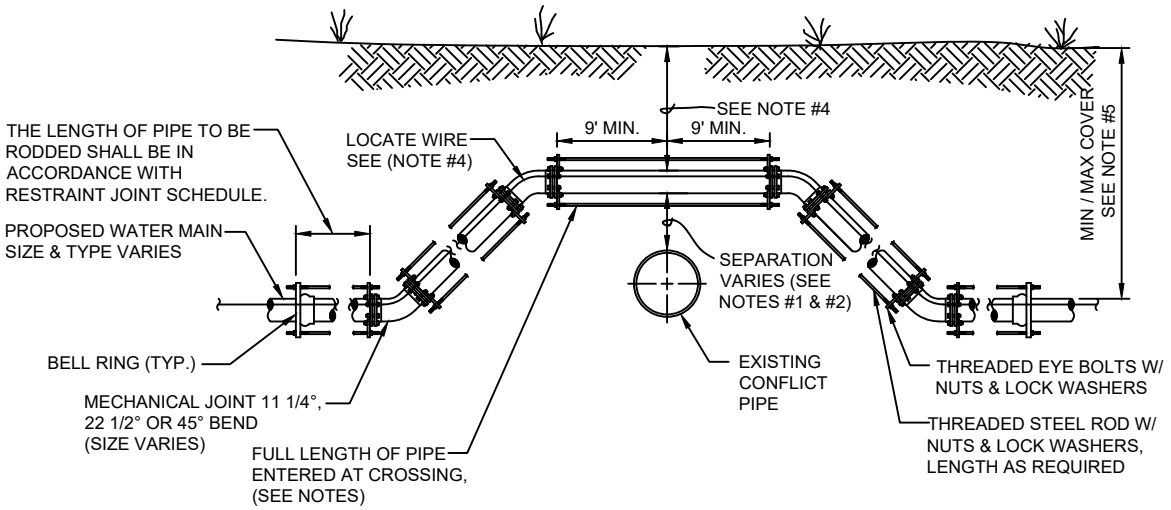

CASE "A" CROSSING

NOTES:

1. IF EXISTING CONFLICT PIPE IS A WATER MAIN12-INCHES OF SEPARATION IS REQUIRED. A FULL LENGTH OF PIPE SHALL BE CENTERED OVER EXISTING UTILITY MAIN TO PROVIDE MAXIMUM JOINT SPACING FOR ALL CROSSINGS.

2. FOR OTHER LOCATION LIMITATIONS SEE PLATES W-10 & W-11.

3. NUMBER OF TIE RODS REQUIRED IS AS FOLLOWS:

3" - 8"	DIAMETER MAIN - 2 TIE RODS REQUIRED PER JOINT (3/4" ROD)
10" - 12"	DIAMETER MAIN - 4 TIE RODS REQUIRED PER JOINT (3/4" ROD)
14" - 16"	DIAMETER MAIN - 6 TIE RODS REQUIRED PER JOINT (3/4" ROD)
18" - 20"	DIAMETER MAIN - 8 TIE RODS REQUIRED PER JOINT (3/4" ROD)
24"	DIAMETER MAIN -12 TIE RODS REQUIRED PER JOINT (3/4" ROD)
30" - 36"	DIAMETER MAIN -14 TIE RODS REQUIRED PER JOINT (1" ROD)
42" - 48"	DIAMETER MAIN -16 TIE RODS REQUIRED PER JOINT (1 1/4" ROD)
54"	DIAMETER MAIN -18 TIE RODS REQUIRED PER JOINT (1 1/4" ROD)

4. LOCATING WIRE REQUIRED: SEE PLATE W-44.

5. THE COVER FOR PIPING LESS THAN 24" SIZE SHALL BE 30" (MIN) IN UNPAVED AREAS, 36" (MIN) IN PAVED AREAS AND A MAXIMUM COVER OF 60", UNLESS PRE-APPROVED BY JEA. THE COVER FOR PIPING 24" SIZE AND LARGER SHALL BE 36" (MIN) IN PAVED AND UNPAVED AREAS AND A MAXIMUM COVER OF 84", UNLESS APPROVE BY JEA.

6. THE SOILS BETWEEN THE MAIN AND THE CONFLICT PIPE SHALL BE COMPACTED TO 98% OF THE MAXIMUM DENSITY AS DETERMINED BY THE LABORATORY MODIFIED PROCTOR TEST ASTM D 1557.

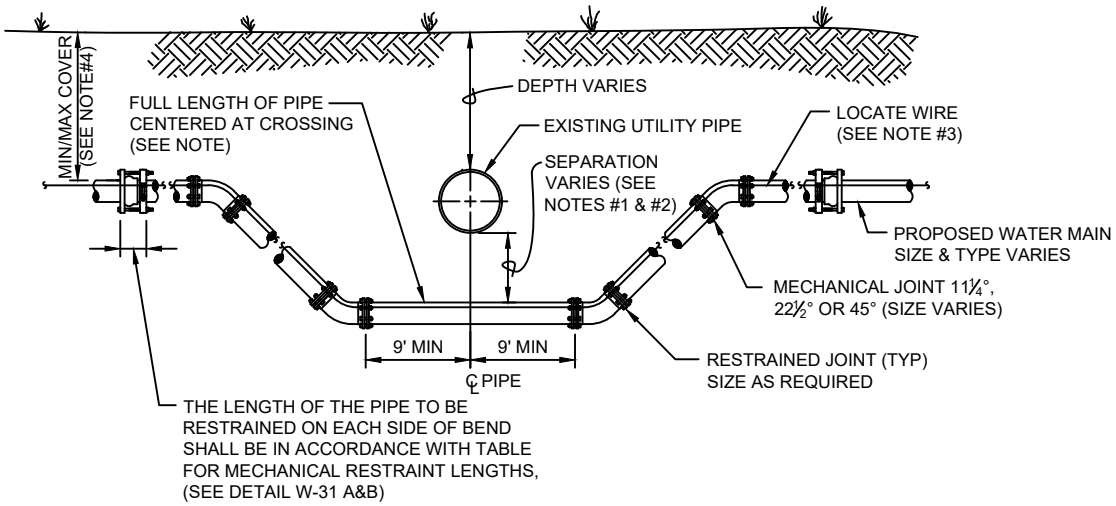

CASE "B" CROSSING

NOTES:

1. THE SOILS BETWEEN THE NEW MAIN AND THE CONFLICT PIPE SHALL BE COMPACTED TO 98% OF THE MAXIMUM DENSITY AS DETERMINED BY THE LABORATORY MODIFIED PROCTOR TEST, ASTM D 1557
2. FOR MINIMUM VERTICAL SEPARATION REQUIREMENTS SEE DETAILS (W-10 AND W-11)
3. LOCATING WIRE REQUIRED: SEE DETAIL W-44.
4. THE COVER FOR PIPING LESS THAN 24" SIZE SHALL BE 30" (MIN) IN UNPAVED AREA, 36" (MIN) IN PAVED AREAS AND A MAXIMUM COVER OF 60", UNLESS APPROVED BY JEA. THE COVER FOR PIPING 24" SIZE AND LARGER SHALL BE 36" (MIN) IN PAVED AND UNPAVED AREAS AND A MAXIMUM COVER OF 84", UNLESS APPROVED BY JEA.
5. IN LOCATIONS WHERE WATER/RECLAIM MAINS CROSS UNDER A BOX-CULVERT, OR 36-INCH DIAMETER AND LARGER STORM WATER MAIN, JEA WILL REQUIRE DIP TO BE UTILIZED FOR THE MAIN.

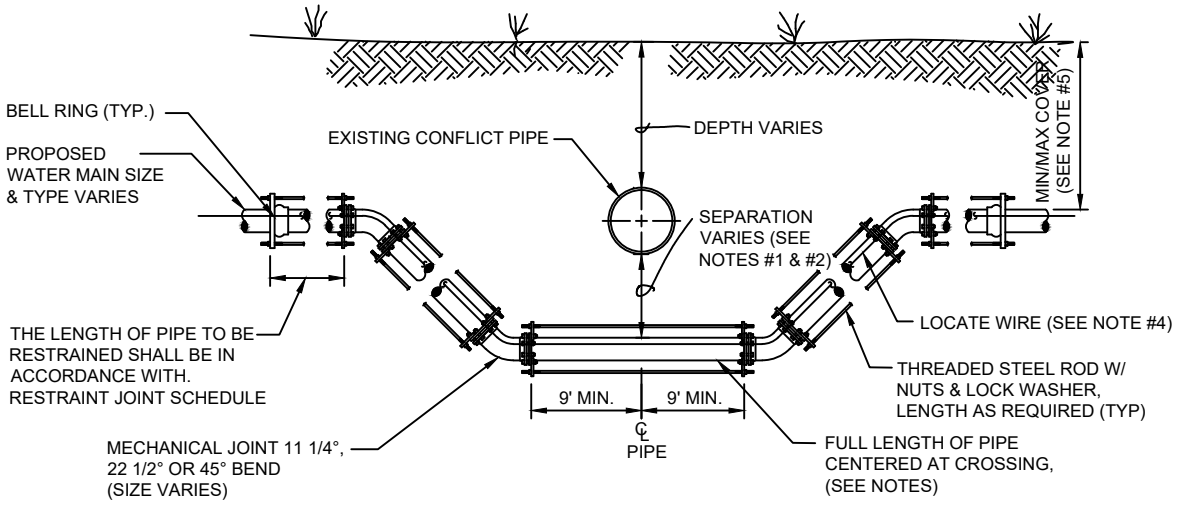

CASE "B" CROSSING

NOTES:

1. IF EXISTING CONFLICT PIPE IS A WATER MAIN, 12-INCHES OF SEPARATION IS REQUIRED. A FULL LENGTH OF PIPE SHALL BE CENTERED OVER EXISTING UTILITY MAIN TO PROVIDE MAXIMUM JOINT SPACING FOR ALL CROSSINGS.

2. FOR OTHER LOCATION LIMITATIONS SEE PLATE W-10 & W-11.

3. NUMBER OF TIE RODS REQUIRED IS AS FOLLOWS:

3" - 8"	DIAMETER MAIN - 2 TIE RODS REQUIRED PER JOINT (3/4" ROD)
10" - 12"	DIAMETER MAIN - 4 TIE RODS REQUIRED PER JOINT (3/4" ROD)
14" - 16"	DIAMETER MAIN - 6 TIE RODS REQUIRED PER JOINT (3/4" ROD)
18" - 20"	DIAMETER MAIN - 8 TIE RODS REQUIRED PER JOINT (3/4" ROD)
24"	DIAMETER MAIN -12 TIE RODS REQUIRED PER JOINT (3/4" ROD)
30" - 36"	DIAMETER MAIN -14 TIE RODS REQUIRED PER JOINT (1" ROD)
42" - 48"	DIAMETER MAIN -16 TIE RODS REQUIRED PER JOINT (1 1/4" ROD)
54"	DIAMETER MAIN -18 TIE RODS REQUIRED PER JOINT (1 1/4" ROD)

4. LOCATING WIRE REQUIRED: SEE PLATE W-44.

5. THE COVER FOR PIPING LESS THAN 24" SIZE SHALL BE 30" (MIN) IN UNPAVED AREAS, 36" (MIN) IN PAVED AREAS AND A MAXIMUM COVER OF 60", UNLESS PRE-APPROVED BY JEA. THE COVER FOR PIPING 24" SIZE AND LARGER SHALL BE 36" (MIN) IN PAVED AND UNPAVED AREAS AND A MAXIMUM COVER OF 84", UNLESS APPROVE BY JEA.

6. THE SOILS BETWEEN THE MAIN AND THE CONFLICT PIPE SHALL BE COMPACTED TO 98% OF THE MAXIMUM DENSITY AS DETERMINED BY THE LABORATORY MODIFIED PROCTOR TEST ASTM D 1557.

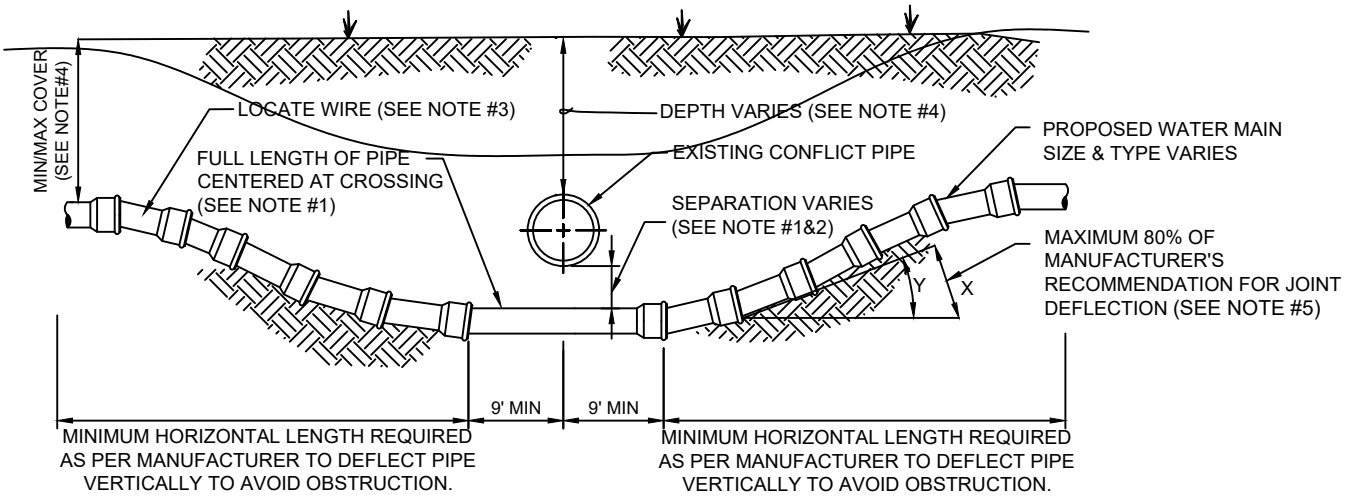

CASE "B" CROSSING

MAXIMUM ALLOWED OFFSET FOR PIPE BY JOINT DEFLECTION

PVC PIPE

PIPE SIZE (IN.)	(X) MAX. OFFSET (IN.)	(Y) ANGLE AT ONE BELL	RESULTING RADIUS OF CURVE WITH 20FT. LENGTHS
2	30	7°	158 FT
4	10	2.4°	480 FT
6	10	2.4°	480 FT
8	10	2.4°	480 FT
10	10	2.4°	480 FT
12	8.5	2°	564 FT
14 - 24	5	1.2°	960 FT
30 - 48	3.25	0.8°	1477 FT

DUCTILE IRON PIPE (Mechanical Joint)

PIPE SIZE (IN.)	(X) MAX. OFFSET (IN.)	(Y) ANGLE AT ONE BELL	RESULTING RADIUS OF CURVE WITH 20FT. LENGTHS
-	-	-	-
4	27	6.5°	177 FT
6	24	5.7°	200 FT
8 - 12	17.5	4.2°	273 FT
14 - 16	12	2.9°	400 FT
18 - 20	10	2.4°	477 FT
24 - 30	8	1.9°	600 FT
36	7	1.7°	687 FT
42 - 48	6.7	1.6°	716 FT

NOTES:

1. IF EXISTING CONFLICT PIPE IS A WATER MAIN, 12-INCHES OF SEPARATION IS REQUIRED. A FULL LENGTH OF PIPE SHALL BE CENTERED OVER EXISTING UTILITY MAIN TO PROVIDE MAXIMUM JOINT SPACING FOR ALL CROSSING.
2. FOR OTHER LOCATION LIMITATIONS SEE DETAIL (W-10 & W-11).
3. LOCATING WIRE REQUIRED: SEE DETAIL W-44.
4. THE COVER OVER ALL PIPING LESS THAN 24" SIZE SHALL BE A MINIMUM OF 30" IN UNPAVED AREAS AND 36" IN PAVED AREAS WITH A MAXIMUM COVER OF 60" UNLESS APPROVED OTHERWISE BY JEA. COVER FOR PIPING 24" SIZE AND LARGER SHALL BE MINIMUM OF 36" (PAVED AND UNPAVED) AND MAXIMUM OF 84" UNLESS APPROVED OTHERWISE BY JEA. THE SOILS BETWEEN THE NEW MAIN AND THE CONFLICT PIPE SHALL BE COMPACTED TO 98% OF THE MAXIMUM DENSITY AS DETERMINED BY THE LABORATORY MODIFIED PROCTOR TEST ASTM D 1557.
5. JEA ONLY ALLOWS 80% OF THE PIPE MANUFACTURER'S RECOMMENDATION FOR JOINT DEFLECTION. BENDING THE PIPE BARREL IS NOT ALLOWED. UNLESS OTHERWISE APPROVED BY JEA, THE MAXIMUM ARE LISTED IN TABLE BELOW. ONLY MANUAL FORCE CAN BE UTILIZED TO OBTAIN THESE JOINT DEFLECTION. ALL OFFSETS ARE BASED ON MINIMUM 20LF PIPE LENGTH.

ADJUSTMENT OVER EXISTING UTILITIES PIPE JOINT DEFLECTION

PLATE W-41

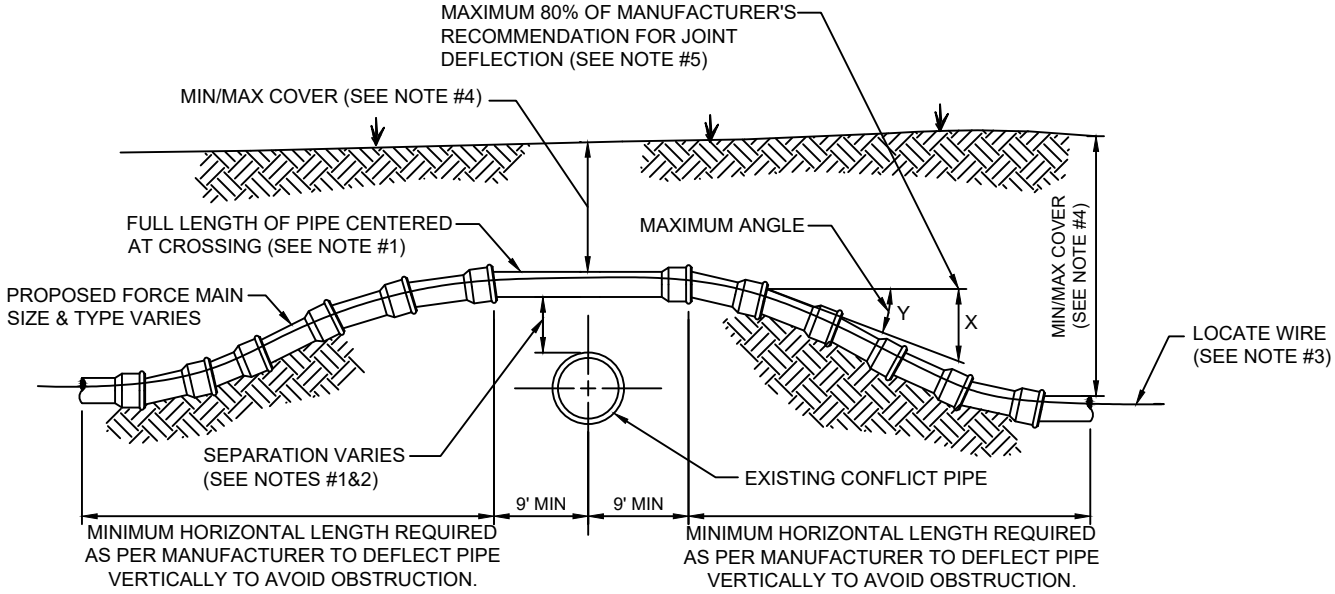

CASE "A" CROSSING

MAXIMUM ALLOWED OFFSET FOR PIPE BY JOINT DEFLECTION

PVC PIPE

PIPE SIZE (IN.)	(X) MAX. OFFSET (IN.)	(Y) ANGLE AT ONE BELL	RESULTING RADIUS OF CURVE WITH 20FT. LENGTHS
2	30	7°	158 FT
4	10	2.4°	480 FT
6	10	2.4°	480 FT
8	10	2.4°	480 FT
10	10	2.4°	480 FT
12	8.5	2°	564 FT
14 - 24	5	1.2°	960 FT
30 - 48	3.25	0.8°	1477 FT

DUCTILE IRON PIPE (Mechanical Joint)

PIPE SIZE (IN.)	(X) MAX. OFFSET (IN.)	(Y) ANGLE AT ONE BELL	RESULTING RADIUS OF CURVE WITH 20FT. LENGTHS
-	-	-	-
4	27	6.5°	177 FT
6	24	5.7°	200 FT
8 - 12	17.5	4.2°	273 FT
14 - 16	12	2.9°	400 FT
18 - 20	10	2.4°	477 FT
24 - 30	8	1.9°	600 FT
36	7	1.7°	687 FT
42 - 48	6.7	1.6°	716 FT

NOTES:

1. IF EXISTING CONFLICT PIPE IS A WATER MAIN, 12-INCHES OF SEPARATION IS REQUIRED. A FULL LENGTH OF PIPE SHALL BE CENTERED OVER EXISTING UTILITY MAIN TO PROVIDE MAXIMUM JOINT SPACING FOR ALL CROSSING.
2. FOR OTHER LOCATION LIMITATIONS SEE DETAIL (W-10 & W-11).
3. LOCATING WIRE REQUIRED: SEE DETAIL W-44.
4. THE COVER OVER ALL PIPING LESS THAN 24" SIZE SHALL BE A MINIMUM OF 30" IN UNPAVED AREAS AND 36" IN PAVED AREAS WITH A MAXIMUM COVER OF 60" UNLESS APPROVED OTHERWISE BY JEA. COVER FOR PIPING 24" SIZE AND LARGER SHALL BE MINIMUM OF 36" (PAVED AND UNPAVED) AND MAXIMUM OF 84" UNLESS APPROVED OTHERWISE BY JEA. THE SOILS BETWEEN THE NEW MAIN AND THE CONFLICT PIPE SHALL BE COMPACTED TO 98% OF THE MAXIMUM DENSITY AS DETERMINED BY THE LABORATORY MODIFIED PROCTOR TEST ASTM D 1557.
5. JEA ONLY ALLOWS 80% OF THE PIPE MANUFACTURER'S RECOMMENDATION FOR JOINT DEFLECTION. BENDING THE PIPE BARREL IS NOT ALLOWED. UNLESS OTHERWISE APPROVED BY JEA, THE MAXIMUM ARE LISTED IN TABLE BELOW. ONLY MANUAL FORCE CAN BE UTILIZED TO OBTAIN THESE JOINT DEFLECTION. ALL OFFSETS ARE BASED ON MINIMUM 20LF PIPE LENGTH.

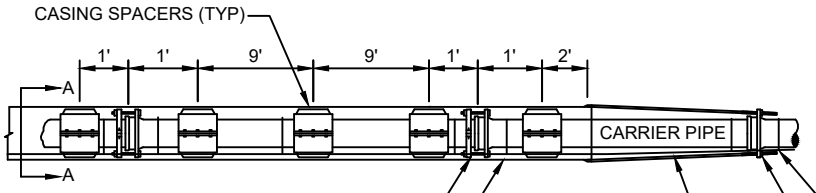

ELEVATION

PROVIDE COLD ROLLED STEEL TIE RODS FROM THE END OF THE STEEL CASING PIPE TO THE FIRST JOINT OF PIPE OUTSIDE THE CASING. THE RODS ARE TO BE WELDED TO THE CASING AND CONNECTED TO A BELL TYPE CLAMP ON THE PIPE. (TYPICAL EACH SIDE). SEE TABLE BELOW FOR THE MINIMUM NUMBER OF TIE RODS REQUIRED AT EACH END, TIE ROD SIZE AND QUANTITY.

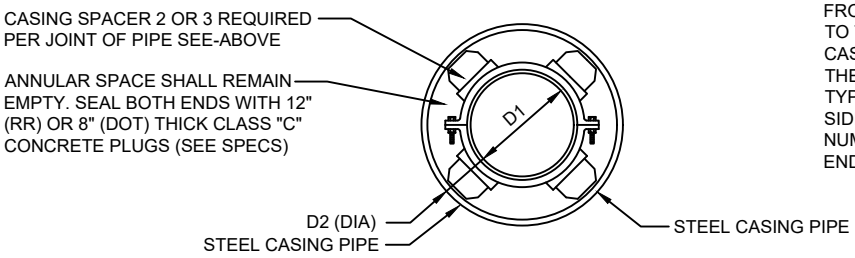

SECTION "A-A"

CARRIER TYPE AND CASING PIPE SIZES (MIN) IN INCHES														
CARRIER PIPE NO. DIA. (D_1)	4	6	8	10	12	14	16	18	20	24	30	36	42	48
CASING PIPE NOM. DIA. (D_2)	14	16	20	20	24	30	30	30	36	42	48	54	60	66
WALL THICKNESS RAILROAD-(FEC)	0.25	1.25	0.375	0.375	0.375	0.50	0.50	0.50	0.562	0.625	0.625	0.688	0.781	0.781
WALL THICKNESS RAILROAD-(CSX)	0.25	0.281	0.375	0.375	0.375	0.469	0.469	0.469	0.562	0.625	0.688	0.781	0.844	0.938
WALL THICKNESS DOT	0.25	0.25	0.25	0.25	0.25	0.312	0.312	0.312	0.375	0.50	0.50	0.50	0.50	0.50
NUMBER OF TIE RODS (EACH END)	2	2	2	4	4	6	6	8	8	12	14	14	16	16
TIE ROD SIZE (DIA.)	3/4"	3/4"	3/4"	3/4"	3/4"	3/4"	3/4"	3/4"	3/4"	3/4"	1"	1"	1 1/4"	1 1/4"

PIPE MAIN CROSSINGS FOR RAILROADS OR HIGHWAYS

NOTES:

1. MIN. COVER TO TOP OF CASING; a) FDOT-3.0' b)RAILROAD-5.5' TO BASE OF RAIL, 4.5' FOR SECONDARY OR INDUSTRIAL TRACKS. EXCEPT FOR F..E.C. (SEE NOTE 3)
2. THE INSIDE DIAMETER OF THE CASING PIPE SHALL BE A MINIMUM OF 4 INCHES GREATER THAN THE OUTSIDE DIAMETER OF THE CARRIER PIPE BELL OR COUPLING. HOWEVER, A MINIMUM OF 6 INCHES IS REQUIRED FOR FLORIDA EAST COAST R.R. CROSSINGS.
3. THE MINIMUM COVER FOR CASING UNDER FLORIDA EAST COAST RAILROAD SHALL BE 5.0 FEET BELOW THE BOTTOM OF TIES FOR ALL TRACKS.
4. ALL JOINTS WITHIN CARRIES PIPE SHALL BE MECHANICAL RESTRAINED JOINTS.
5. FOR STREET USES WHICH ARE NOT DOT OR RAILROAD, USE DOT CASING THICKNESS UNLESS OTHERWISE INDICATED BY ENGINEER.
6. CASING PIPE SHALL BE FURNISHED IN NOMINAL 8 FOOT LENGTHS (MIN.) UNLESS OTHERWISE INDICATED ON THE DRAWING OR APPROVED BY JEA.
7. PIPE TO BE USED AS A CASING SHALL CONFORM TO EITHER ASTM STANDARD A139 FOR "ELECTRIC FUSION (ARC) WELDED STEEL PIPE". WITH A MINIMUM YIELD STRENGTH OF 35,000 PSI OR "API SPECIFICATION API-5LX, GRADE X-42 WELDED STEEL PIPE".

TYPICAL SPLIT CASING DETAIL - WATER

PLATE W-30A

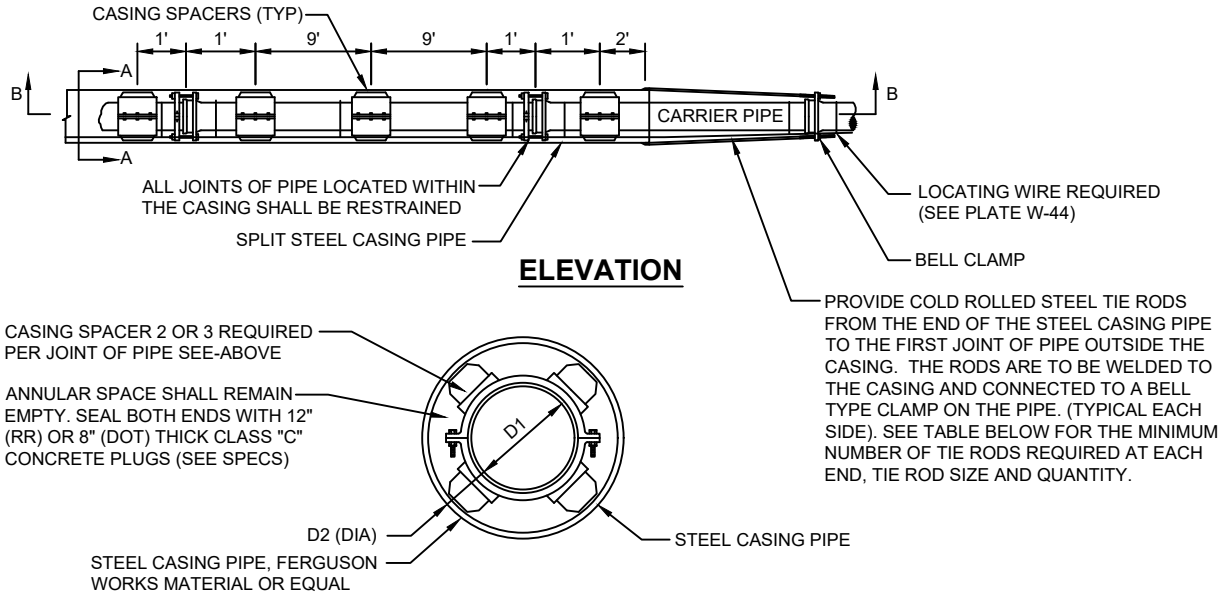

ELEVATION

SECTION "A-A"

CARRIER TYPE AND CASING PIPE SIZES (MIN) IN INCHES														
CARRIER PIPE NO. DIA. (D_1)	4	6	8	10	12	14	16	18	20	24	30	36	42	48
CASING PIPE NOM. DIA. (D_2)	14	16	20	20	24	30	30	30	36	42	48	54	60	66
WALL THICKNESS RAILROAD-(FEC)	0.25	1.25	0.375	0.375	0.375	0.50	0.50	0.50	0.562	0.625	0.625	0.688	0.781	0.781
WALL THICKNESS RAILROAD-(CSX)	0.25	0.281	0.375	0.375	0.375	0.469	0.469	0.469	0.562	0.625	0.688	0.781	0.844	0.938
WALL THICKNESS DOT	0.25	0.25	0.25	0.25	0.25	0.312	0.312	0.312	0.375	0.50	0.50	0.50	0.50	0.50
NUMBER OF TIE RODS (EACH END)	2	2	2	4	4	6	6	8	8	12	14	14	16	16
TIE ROD SIZE (DIA.)	3/4"	3/4"	3/4"	3/4"	3/4"	3/4"	3/4"	3/4"	3/4"	3/4"	1"	1"	1 1/4"	1 1/4"

NOTES

1. NOT ALLOWED UNDER RAILROADS.
2. THE INSIDE DIAMETER OF THE CASING PIPE SHALL BE A MINIMUM OF 4 INCHES GREATER THAN THE OUTSIDE DIAMETER OF THE CARRIER PIPE BELL OR COUPLING.
3. ALL JOINTS WITHIN CARRIES PIPE SHALL BE MECHANICAL RESTRAINED JOINTS.
4. FOR STREET USES WHICH ARE NOT DOT OR RAILROAD, USE DOT CASING THICKNESS UNLESS OTHERWISE INDICATED BY ENGINEER.
5. CASING PIPE SHALL BE FURNISHED IN NOMINAL 8 FOOT LENGTHS (MIN.) UNLESS OTHERWISE INDICATED ON THE DRAWING OR APPROVED BY JEA.
6. PIPE TO BE USED AS A CASING SHALL CONFORM TO EITHER ASTM STANDARD A139 FOR "ELECTRIC FUSION (ARC) WELDED STEEL PIPE". WITH A MINIMUM YIELD STRENGTH OF 35,000 PSI OR "API SPECIFICATION API-5LX, GRADE X-42 WELDED STEEL PIPE".

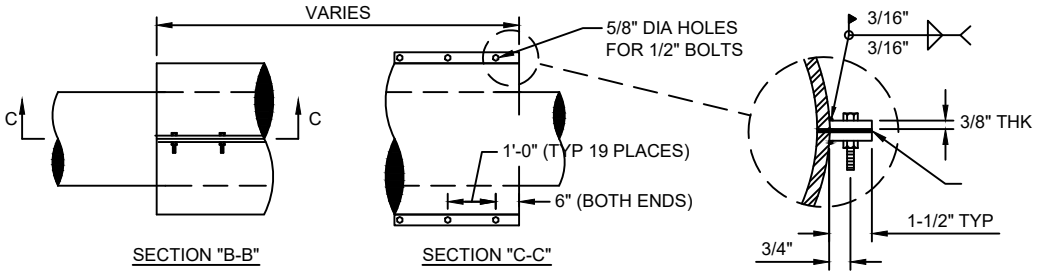

MATERIAL:	PIPE -	ATSM A53, GRADE B, ERW, STD WALL, CARBON STEEL
	PLATE -	STM A36, GRADE B, CARBON STEEL (THICKNESS AS NOTED)
WELDS	ALL WELDS SHALL BE PERFORMED BY A CERTIFIED WELDER	
LININGS/COATINGS:	INTERIOR -	BARE
	EXTERIOR -	BARE

PIPE MAIN FOR CROSSINGS USING SPLIT CASING PIPE

NOT ALLOWED UNDER RAILROADS

BRIDGE DECK PIPE HANGER DETAIL

PLATE W-20

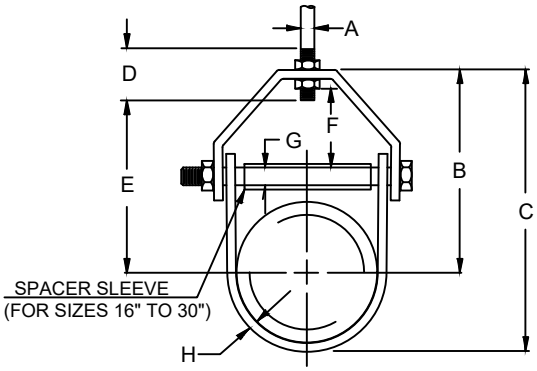

PIPE SIZE	MAX LOAD	WEIGHT	ROD SIZE A	B	C	ROD TAKE OUT E	ADJUST. F	G	H WIDTH LOWER
4	1430	1.51	5/8	5-9/16	7-13/16	4-1/2	1-11/16	3/8	1-1/4
6	1940	3.10	3/4	6-15/16	10-1/4	5-3/4	1-11/16	1/2	1-7/16
8	2000	4.75	3/4	8-3/8	12-11/16	7-3/16	2	1/2	1-7/16
10	3600	8.60	7/8	9-7/8	15-1/4	8-7/16	2-1/8	5/8	1-3/4
12	3800	11.20	7/8	11-9/16	17-15/16	10-1/8	2-13/16	5/8	2
16	4600	19.85	1	14	22	12	2-3/4	1	2-1/2
20	4800	40.33	1-1/4	17-9/16	27-9/16	15-3/16	3-7/8	1-1/4	3
24	4800	49.83	1-1/4	19-13/16	31-13/16	17-5/16	3-7/8	1-1/4	3
30	6000	70.18	1-1/4	24-3/16	39-3/16	21-9/16	5-1/8	1-1/4	3

NOTES :

1. ALL HANGER COMPONENTS SHALL BE 316 STAINLESS STEEL UNLESS OTHERWISE NOTED. ALL CUT ENDS SHALL HAVE ROUNDED CORNERS.
2. PROVIDE A HANGER AT EACH PIPE BELL. ADDITIONAL HANGERS SHALL BE SPACED AT TEN (10) FOOT CENTERS (MAX).
3. PIPE HANGERS LARGER THAN 12" SIZE SHALL BE SPECIFICALLY DESIGNED FOR HORIZONTAL AND VERTICAL STRUCTURAL SUPPORT. FOR LARGER MAINS, HORIZONTAL SUPPORT MAY BE ACHIEVED BY EXTENDING THE BOTTOM ANGLE TO SPAN BETWEEN TWO EXISTING CONCRETE BEAMS (NOT DIRECTLY CONNECTED TO CONCRETE BEAMS).
4. THE DIMENSION PROVIDED ABOVE MAY VARY DEPENDING ON ACTUAL FIELD CONDITIONS.
5. FOR CROSSINGS OVER 250 LINEAR FEET, THE USE OF FLEXIBLE EXPANSION JOINTS SHALL BE UTILIZED.

SIDEWALL PIPE HANGER DETAIL

PLATE W-21

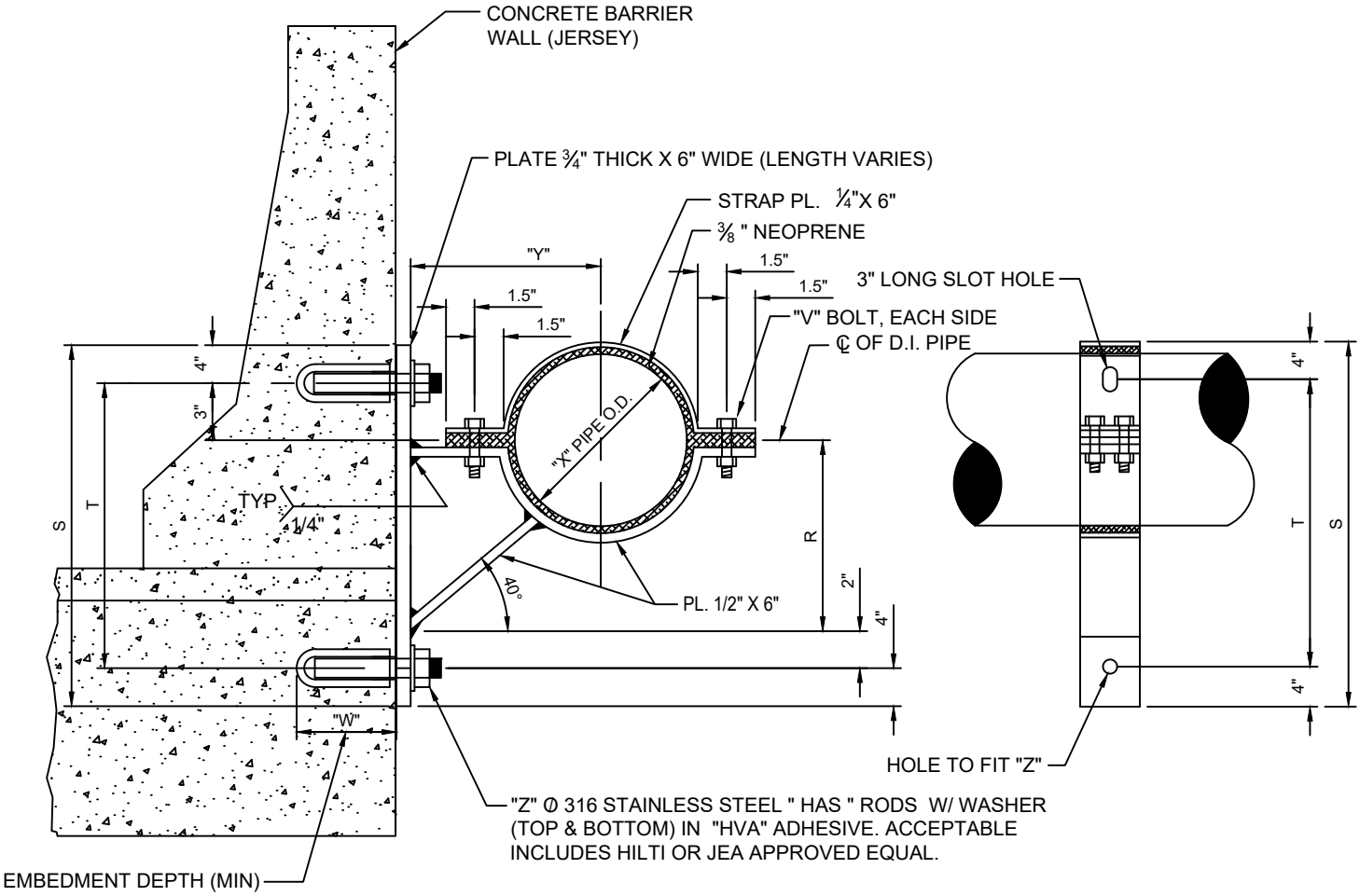

CROSS-SECTION PROFILE

PIPE SIZE	4"	6"	8"	10"	12"	16"	20"	24"
X	4.80"	6.90"	9.05"	11.10"	13.20"	17.40"	21.60"	25.80"
Y	8"	9"	10"	12"	13"	15"	17"	19"
Z	¾"	¾"	¾"	1"	1"	1"	1¼"	1¼"
W	6.625"	6.625"	6.625"	8.25"	8.25"	8.25"	12"	12"
V	1/2"	1/2"	1/2"	1/2"	1/2"	3/4"	3/4"	3/4"
R	6.72"	7.55"	8.39"	10.07"	10.91"	12.59"	14.27"	15.94"
S	19.71"	20.55"	21.39"	23.07"	23.91"	25.59"	27.26"	28.94"
T	11.72"	12.55"	13.39"	15.07"	15.91"	17.58"	19.26"	20.94"

NOTES :

1. ALL WELDS TO BE PERFORMED BY A CERTIFIED STRUCTURAL WELDER.
2. ALL SUPPORT BRACKET MEMBERS SHALL BE HOT DIPPED GALVANIZED AFTER FABRICATION.
3. ALL NUTS, BOLTS, AND WASHERS SHALL BE 316 STAINLESS STEEL.
4. THE SPACING OF SIDEWALL PIPE SUPPORTS SHALL BE SPECIFICALLY DESIGNED BASED UPON MANY FACTS INCLUDING PIPE SIZE AND MATERIAL EMBEDEMENT LIMITATIONS. UNLESS APPROVED OTHERWISE BY JEA, IN NO CASE SHALL THE SPACING OF PIPE SUPPORTS EXCEED TWENTY (20) FEET ON-CENTER FOR PIPE SIZES TWELVE (12) INCH AND SMALLER AND TEN (10) FEET ON-CENTER FOR PIPE SIZES GREATER THAN TWELVE (12) INCHES.

PIPE SUPPORT & POLE ASSEMBLY FOR WATER MAIN

PLATE W-22

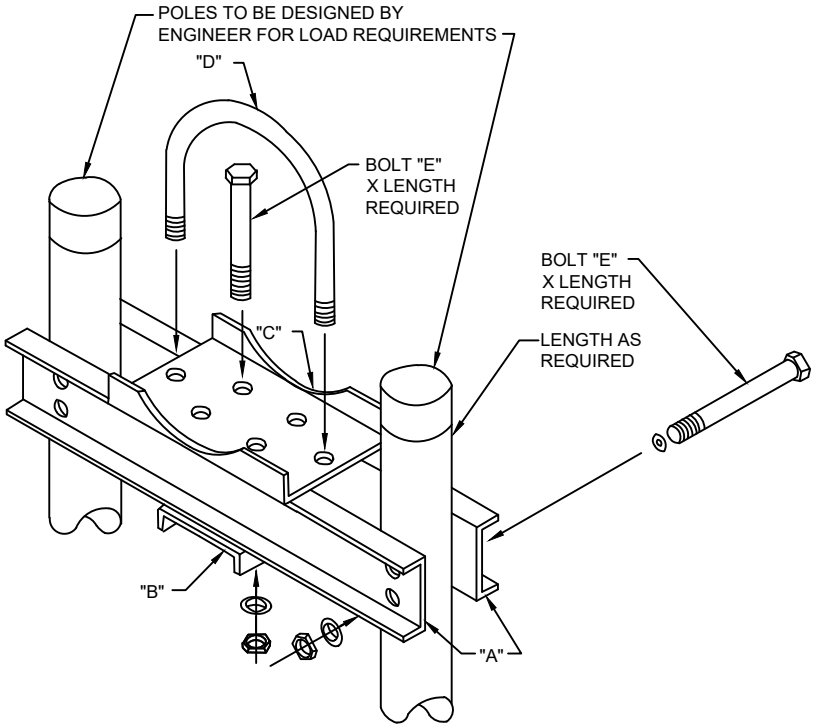

MATERIAL SCHEDULE

ITEM	PIPE 4"-14"	PIPE 16"-24"
A	8" [11.5	12" [25.0
B	10" [15.3	12" [25.0
C	12" [25.0	12" [25.0
D	1/2" U-BOLT	1-1/8" U-BOLT
E	3/4" U-BOLT	1-1/8" U-BOLT

NOTES:

1. ALL PARTS AND FITTINGS TO BE HOT DIPPED GALVANIZED AFTER FABRICATION SEE PLATE S-37 FOR ADDITIONAL DETAILS.
2. AT A MINIMUM, ONE PIPE SUPPORT SHALL BE PROVIDED FOR EACH LENGTH OF (D.I.P.) PIPE UNLESS LONG-SPAN (D.I.P.) PIPE ASSEMBLIES ARE PROVIDED.

PIPE SUPPORT DETAILS FOR POLE ASSEMBLY

PLATE W-23

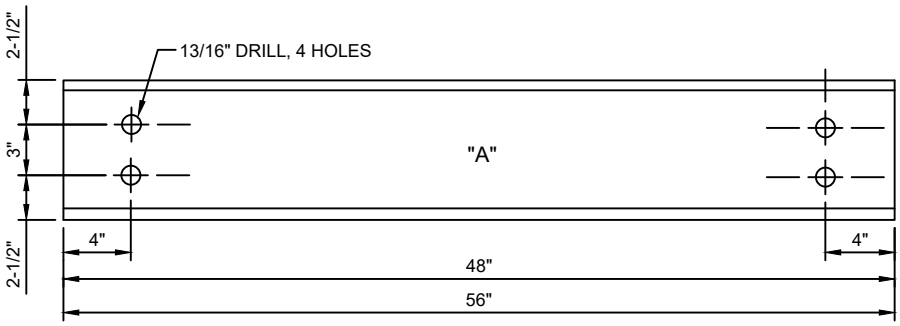

"A" STANDARD 8" CHANNEL 11.5 LBS.

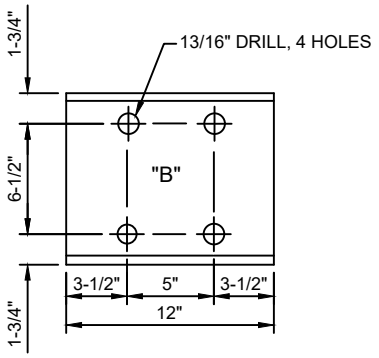

"B" STANDARD 10" CHANNEL 15.3 LBS.

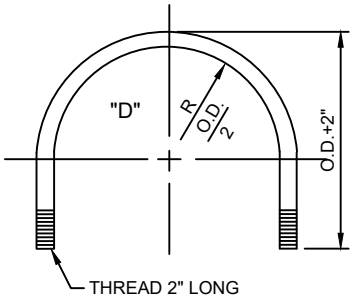

"D" ½" U-BOLT

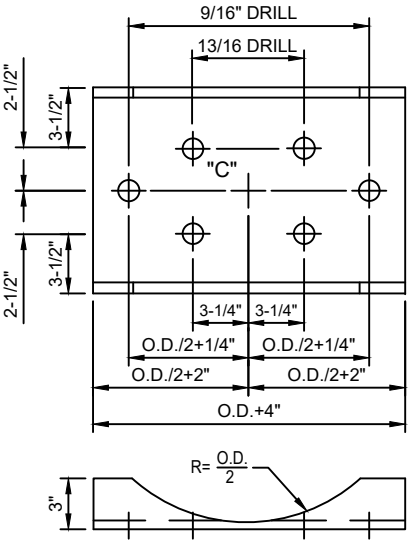

"C" STANDARD 12" CHANNEL 25 LBS.

D.I. PIPE	O.D. APPROX
3"	4.71"
4"	5.55"
6"	7.65"
8"	9.80"
10"	11.85"
12"	13.95"
14"	16.05"
16"	18.15"
18"	20.25"
20"	22.35"
24"	26.55"

TABLE

NOTES:

1. FOR PIPE 16" AND LARGER, UTILIZE CHANNEL SIZES AS SCHEDULED ON PLATE W-22, BUT CUSTOMIZE BOLT PATTERN DIMENSIONS TO FIT PIPE SIZE. SEE PLATE W-22 FOR ASSEMBLY LAYOUT.

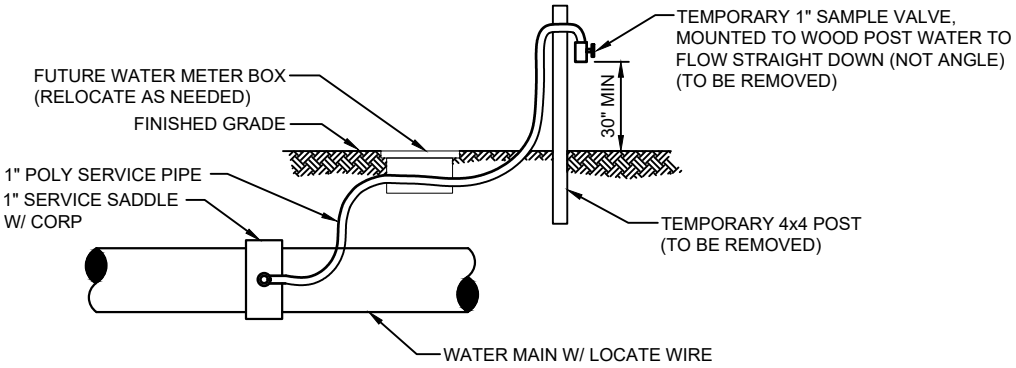

TEMPORARY SAMPLE TAP UTILIZING A NEW 1" WATER SERVICE

NOTES::

1. LOCATION OF SAMPLE POINT BIBB SHALL NOT BE WITHIN THE ROADWAY BUT ROUTED TO THE ROAD SHOULDERS.
2. THE CONTRACTOR SHALL BE RESPONSIBLE FOR THE REMOVAL OF ALL TEMPORARY PIPING & FITTINGS (AS NOTED) AFTER BACTERIOLOGICAL CLEARANCE IS RECEIVED.
3. THE CONTRACTOR SHALL UTILIZE THE ABOVE ALTERNATIVE METHODS FOR CONSTRUCTION OF TEMPORARY SAMPLE POINTS IN ALL AREAS, WHERE POSSIBLE.
4. THE CONTRACTOR SHALL COMPLY WITH ALL JEA RULES AND POLICIES AS OUTLINED BY THE JEA'S ENVIRONMENTAL RESPONSE COORDINATOR (ERC) AND OTHER ASSOCIATED JEA STANDARDS.

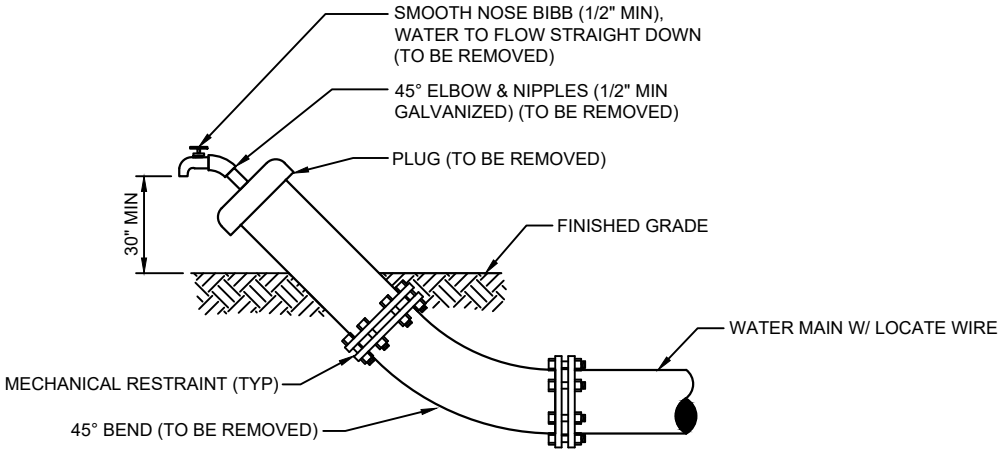

TEMPORARY SAMPLE TAP UTILIZING PLUG AT FLUSHING LOCATION

NOTES::

1. LOCATION OF SAMPLE POINT BIBB SHALL NOT BE WITHIN THE ROADWAY BUT ROUTED TO THE ROAD SHOULDERS.
2. THE CONTRACTOR SHALL BE RESPONSIBLE FOR THE REMOVAL OF ALL TEMPORARY PIPING & FITTINGS (AS NOTED) AFTER BACTERIOLOGICAL CLEARANCE IS RECEIVED.
3. THE CONTRACTOR SHALL UTILIZE THE ABOVE ALTERNATIVE METHODS FOR CONSTRUCTION OF TEMPORARY SAMPLE POINTS IN ALL AREAS, WHERE POSSIBLE.
4. THE CONTRACTOR SHALL COMPLY WITH ALL JEA RULES AND POLICIES AS OUTLINED BY THE JEA'S ENVIRONMENTAL RESPONSE COORDINATOR (ERC) AND OTHER ASSOCIATED JEA STANDARDS.

TEMPORARY SAMPLE TAP

PLATE W-25

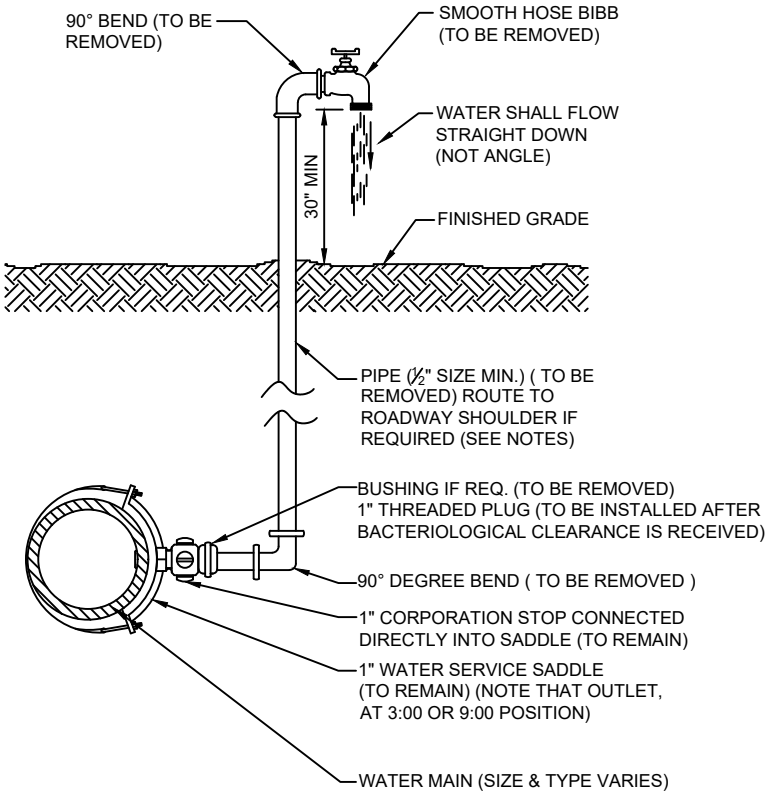

NOTES:

1. LOCATION OF SAMPLE POINT BIBB SHALL NOT BE WITHIN THE ROADWAY BUT ROUTED TO THE ROADWAY SHOULDERS (NON-TRAFFIC AREAS).
2. THE CONTRACTOR SHALL BE RESPONSIBLE FOR THE REMOVAL OF ALL TEMPORARY PIPING & FITTINGS (AS NOTED), AFTER BACTERIOLOGICAL CLEARANCE IS RECEIVED.
3. PIPE AND FITTINGS SHALL BE PVC (SCH. 40) OR GALV. MATERIAL.
4. THE USE OF THE ABOVE CONSTRUCTION FOR A TEMPORARY SAMPLE POINT SHALL BE LIMITED TO AREAS WHERE A SAMPLE TAP BY ALTERNATIVE METHODS (SEE W-24) IS NOT FEASIBLE OR IF DIRECTED OTHERWISE BY JEA.
5. THE CONTRACTOR SHALL COMPLY WITH ALL JEA RULES AND POLICIES AS AS OUTLINED BY JEA'S ENVIRONMENTAL RESPONSE COORDINATOR (ERC) AND OTHER ASSOCIATED JEA STANDARDS.

2" TEMPORARY SAMPLE TAP FOR STUB OUT

PLATE W-26

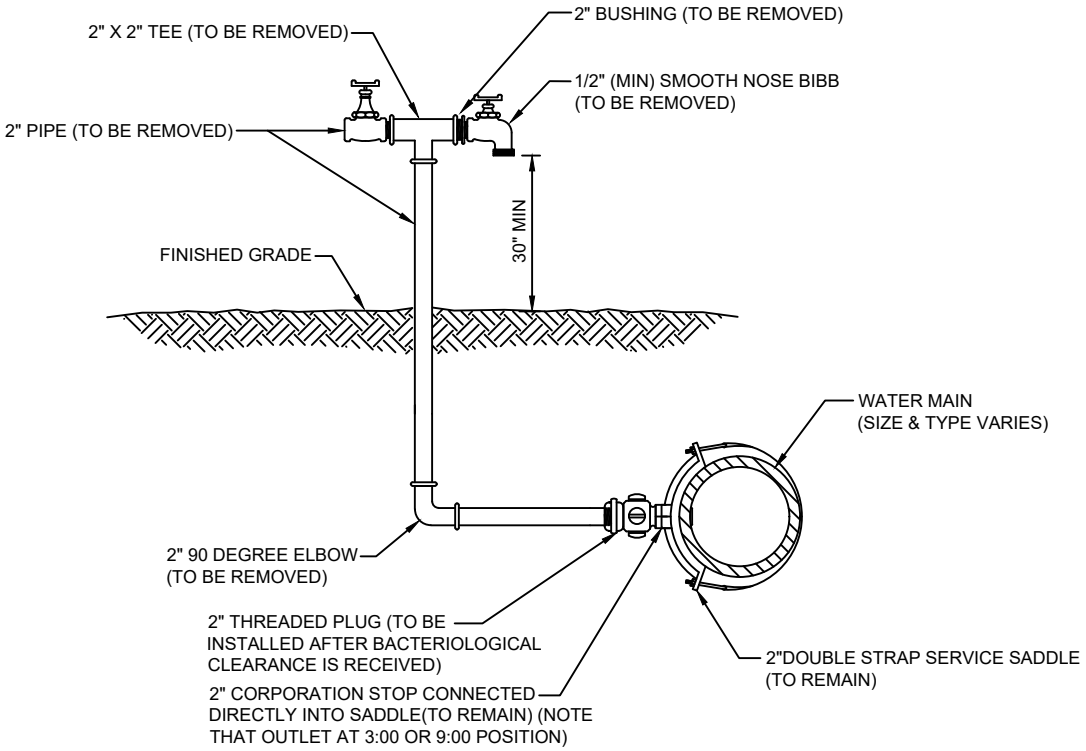

NOTES:

1. LOCATION OF SAMPLE POINT BIBB SHALL NOT BE WITHIN THE ROADWAY BUT ROUTED TO THE ROADWAY SHOULDERS (NON-TRAFFIC AREAS).
2. ALL PIPE & FITTING SHALL BE GALVANIZED MATERIAL OR PVC (S-40).
3. THE CONTRACTOR SHALL BE RESPONSIBLE FOR THE REMOVAL OF ALL TEMPORARY PIPING & FITTING (AS NOTED) AFTER BACTERIOLOGICAL CLEARANCE IS RECEIVED
4. THE CONTRACTOR SHALL COMPLY WITH ALL JEA RULES AND POLICES AS OUTLINED BY THE JEA'S ENVIRONMENTAL RESPONSE COORDINATOR (ERC) AND OTHER ASSOCIATED JEA STANDARDS.

TEMPORARY SAMPLE TAP FOR IN-SERVICE MAINS

PLATE W-27

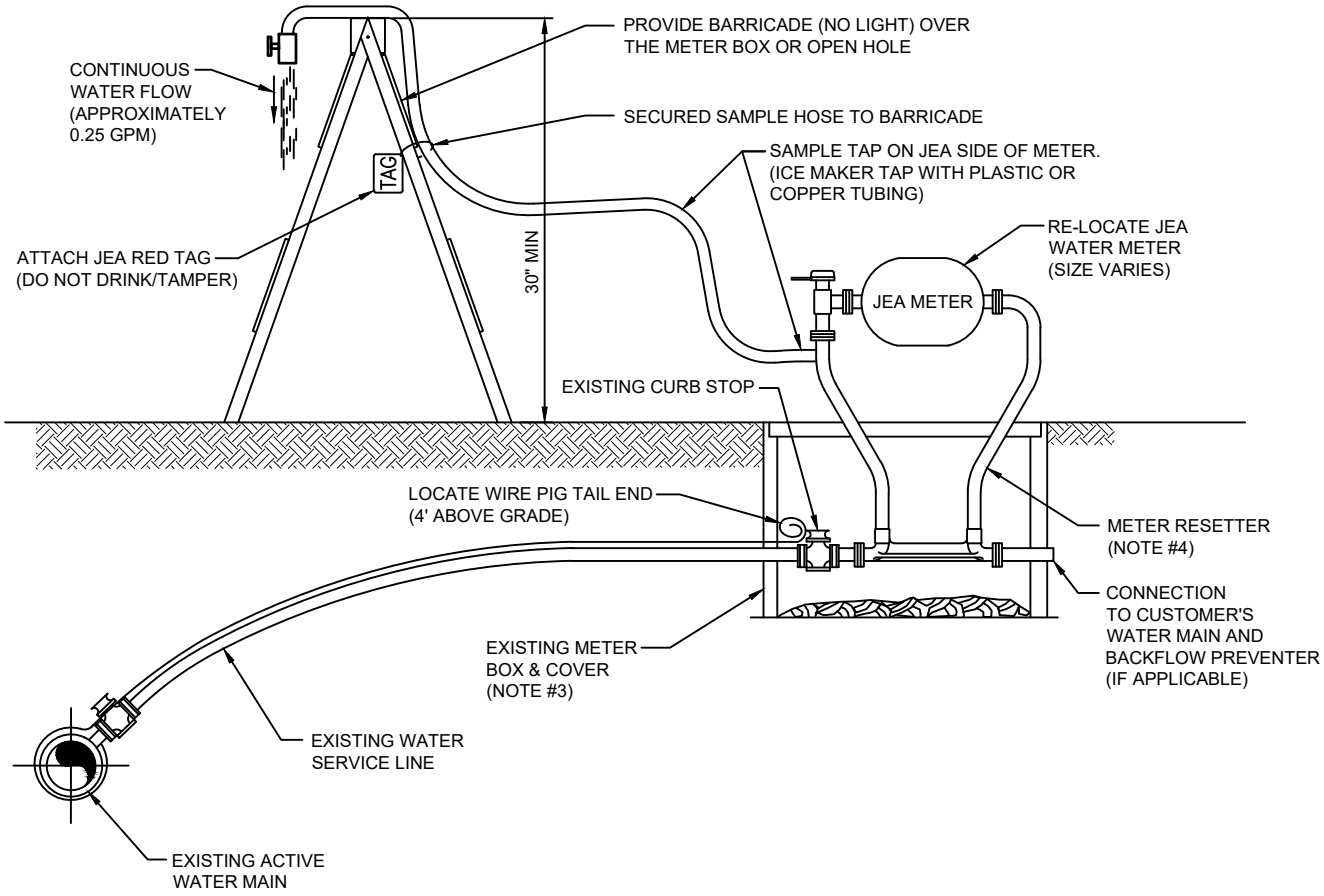

NOTES :

1. THE ABOVE TEMPORARY WATER SAMPLE TAP IS FOR USE ON ACTIVE WATER MAINS. GENERALLY, THIS SAMPLE TAP IS INSTALLED ADJACENT TO EACH WATER MAIN VALVE BEING CLOSED DURING A WATER OUTAGE. WHEN REQUIRED, THE CONTRACTOR SHALL PROVIDE THE ABOVE TEMPORARY SAMPLE TAP AND THEN REMOVE/RESTORE THE WATER METER SERVICE AFTER BACTERIOLOGICAL CLEARANCE.

2. THE CONTRACTOR SHALL COMPLY WITH ALL JEA RULES AND POLICIES AS OUTLINED BY THE JEA'S ENVIRONMENTAL RESPONSE COORDINATOR (ERC) AND OTHER ASSOCIATED JEA STANDARDS. THESE SERVICES SHALL INCLUDE, AT A MINIMUM, ASSISTANCE WITH OUTAGE SIMULATIONS, ASSISTANCE WITH THE PREPARATION OF CUSTOMER NOTIFICATION AND OR BOIL WATER NOTICES, DISTRIBUTION OF CUSTOMER NOTIFICATIONS AND COORDINATION WITH ERC AND THE JEA ON-SITE REPRESENTATIVES.

3. CONTRACTOR SHALL REMOVE METER BOX LID AND SET IT NEXT TO THE BOX. THE CONTRACTOR SHALL REPAIR, AT THE CONTRACTORS EXPENSE, ANY DAMAGE TO THE ELECTRONIC NMR/MTU IF DAMAGED DURING THE ABOVE BACTERIOLOGICAL TEST PERIOD AND REMOVED AFTER BACTERIOLOGICAL CLEARANCE.

4. A METER "RESETTER" SHALL BE INSTALLED AND REMOVED AFTER BACTERIOLOGICAL CLEARANCE AS SHOWN. THE RESETTER SHALL INCLUDE AN ANGLED INVERTED KEY METER VALVE ON THE INLET, METER COUPLINGS, 12-INCH RISE AND SIZED TO FIT THE ACTUAL FIELD METER THREADS. ACCEPTABLE: FORD 40 SERIES, MUELLER H-14118 OR JEA APPROVED EQUAL.

FLUSHING VALVE BELOW GRADE

PLATE W-28

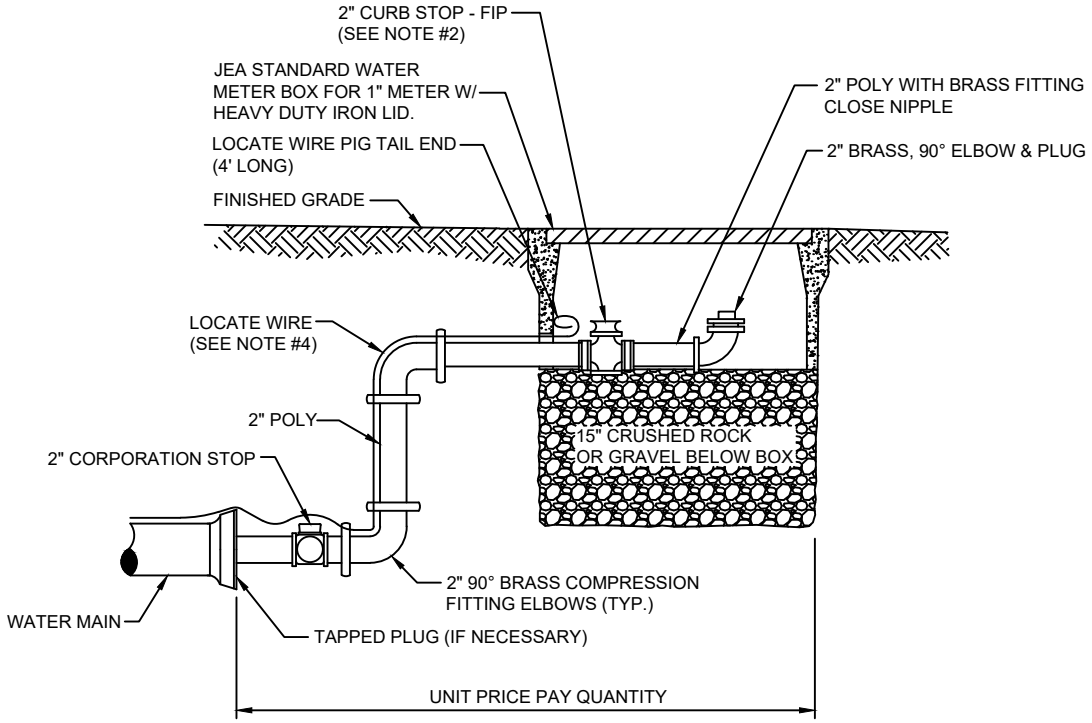

NOTES:

1. PIPE SHALL BE POLYETHYLENE. FITTINGS SHALL BE BRASS.
2. THE 2" CURB STOP SHALL BE ALL BRONZE. FITTINGS SHALL BE BRASS.
3. ANY RECLAIMED WATER VALVE SHALL HAVE RECLAIMED EMBLEM.
4. LOCATE WIRE FOR 10' OR GREATER IN LENGTH.
5. CANNOT BE PLACED UNDER CONCRETE OR PAVEMENT.
6. PLACE 2 FEET PAST LAST WATER MAIN SERVICE CONNECTION.

SWABBING PORT AND CLEAN OUT VAULT DETAIL - SECTION

PLATE W-45

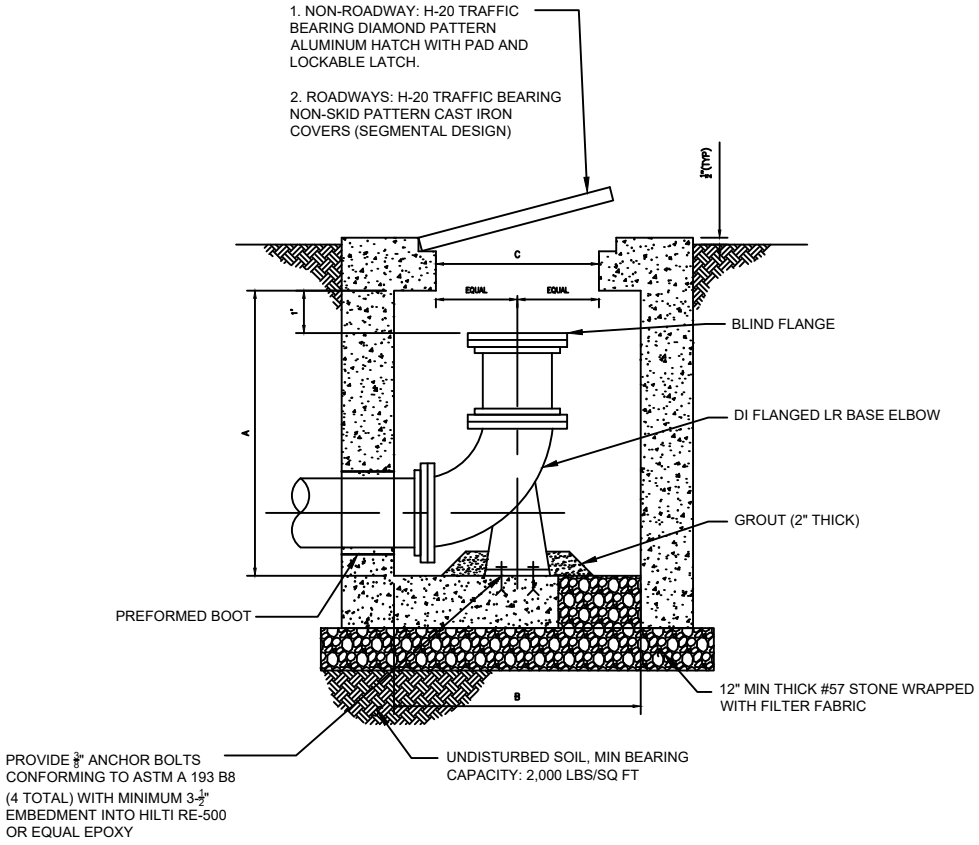

SWABBING PORT AND CLEAN OUT VAULT DETAIL - PLAN

PLATE W-45A

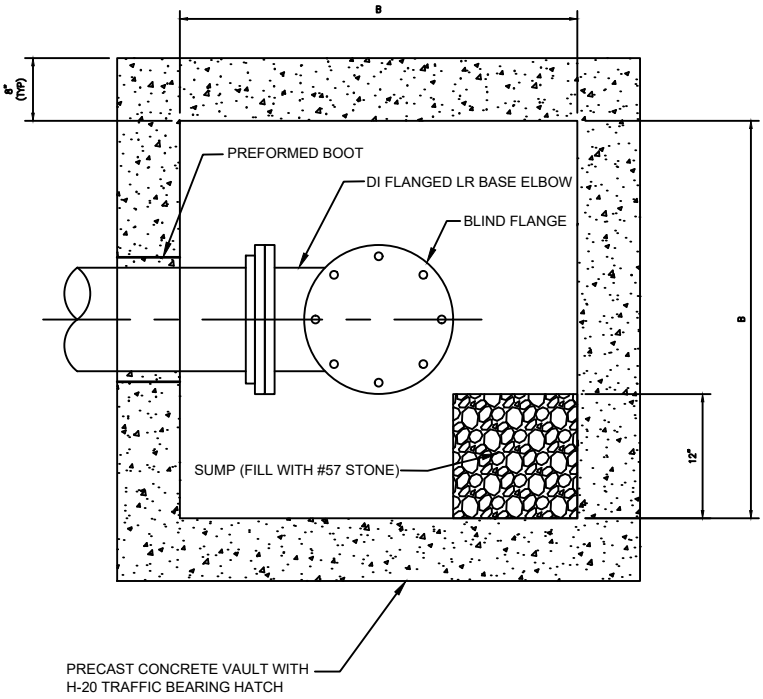

SWABBING LAUNCHING STATION DETAIL FOR NEW WATER MAIN UP TO 24"

PLATE W-45B

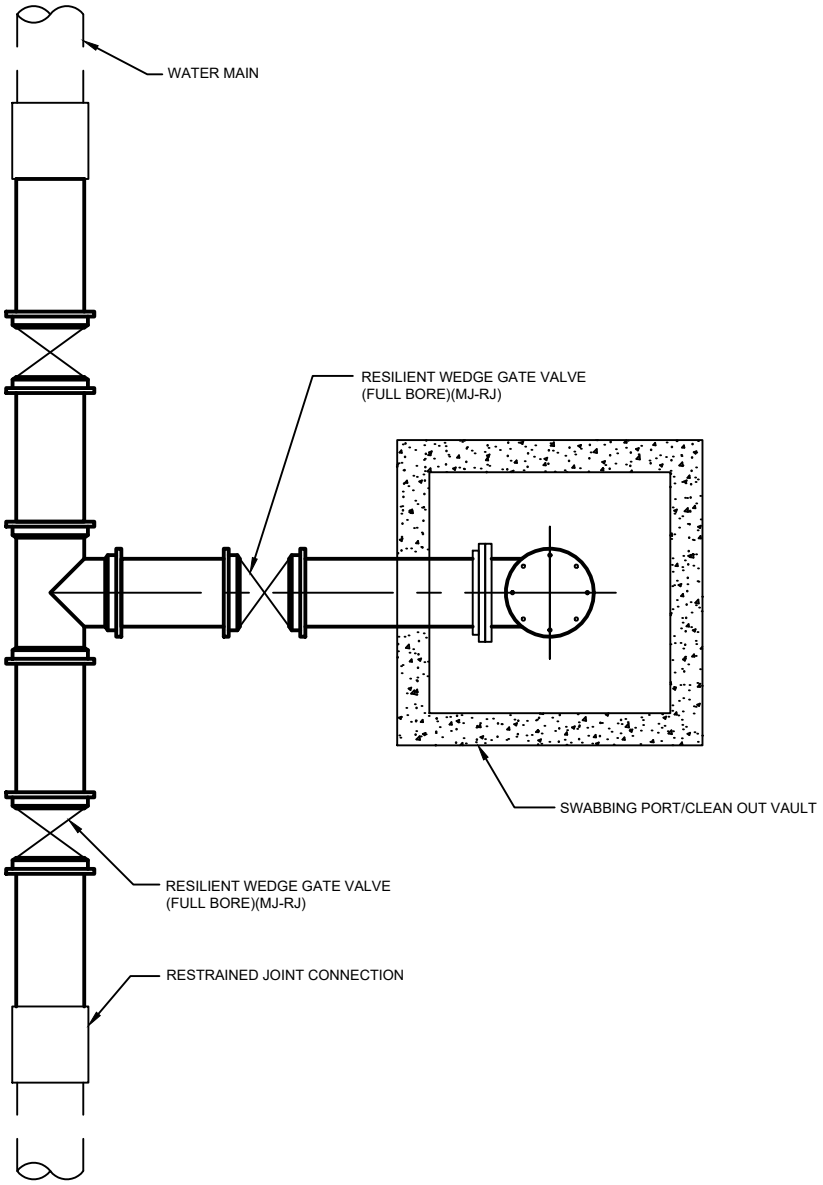

SWABBING PIG LAUNCHING STATION DETAIL FOR WATER MAINS UP TO 24" - PLAN

PLATE W-45C

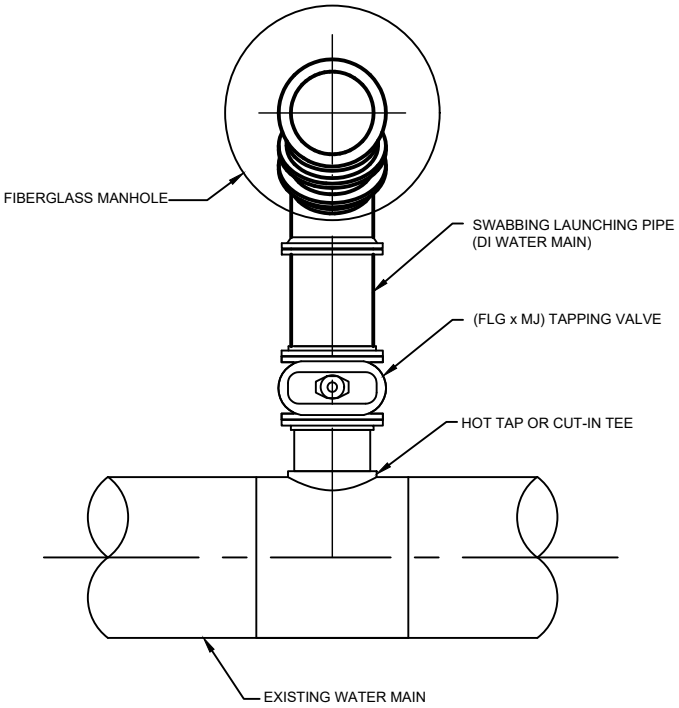

NOTES:

1. FOR HOT TAP CONNECTIONS ON EXISTING WATER MAINS 10" DIAMETER AND GREATER, DIAMETER OF TAPPING VALVE AND PIG LAUNCHING PIPE SHALL BE ONE NOMINAL SIZE LESS THAN EXISTING WATER MAIN.

RETROFIT SWABBING LAUNCHING STATION DETAIL FOR WATER MAINS UP TO 24" - SECTION

PLATE W-45D

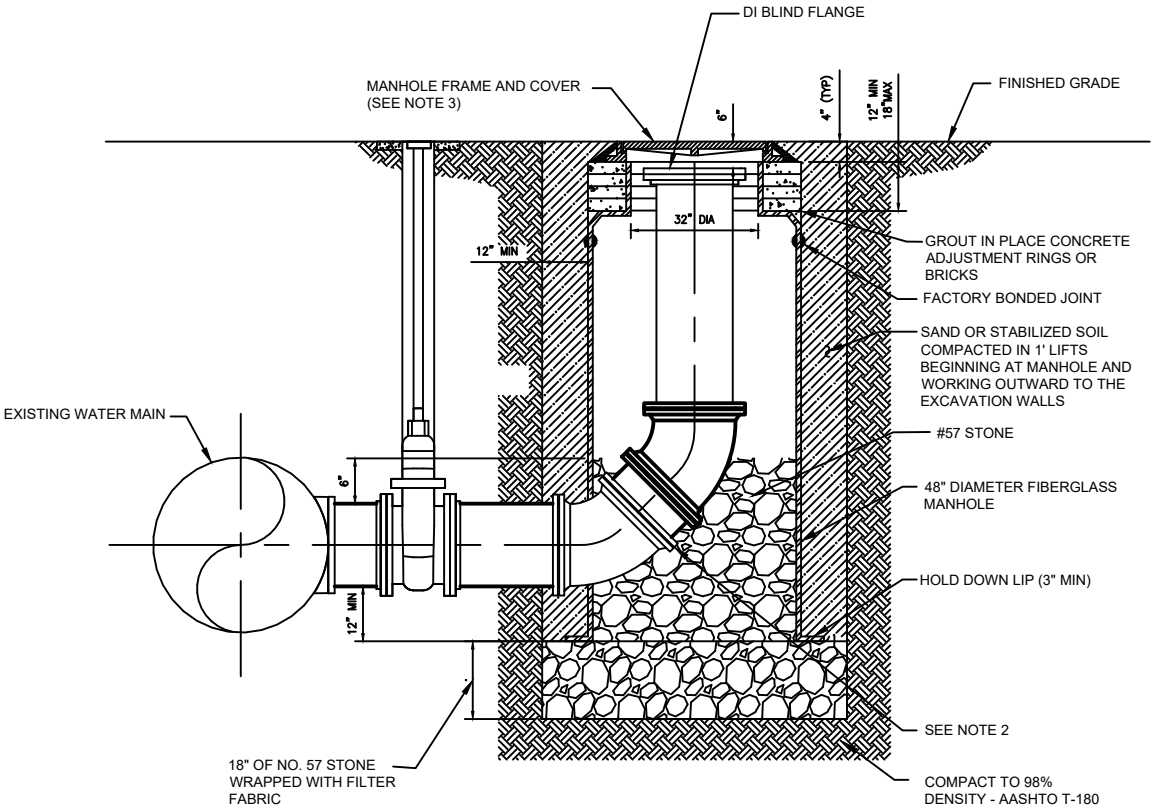

NOTES:

1. PROVIDE ALL MATERIALS IN ACCORDANCE TO JEA WATER AND WASTEWATER STANDARD SPECIFICATIONS.
2. USE TWO VERTICAL 45 DEGREE MJ BENDS OR LONG RADIUS 90 DEGREE MJ BEND.
3. PROVIDE STANDARD JEA FRAME AND COVER.
4. RESTRAIN ALL JOINTS.

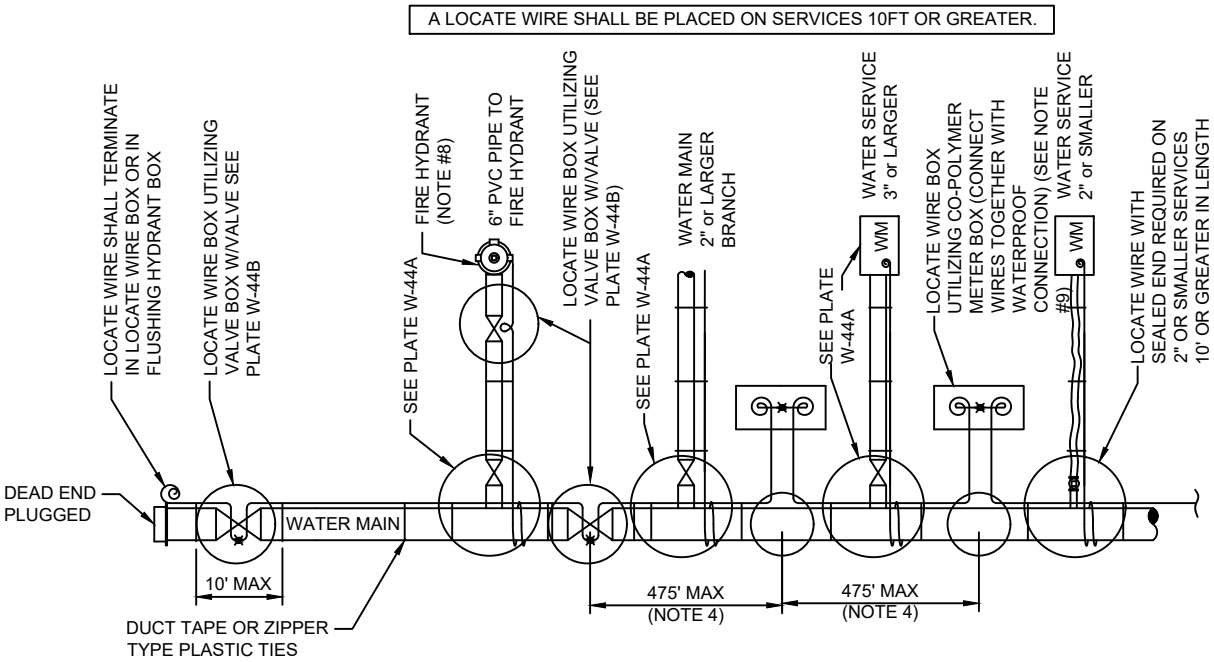

LOCATE WIRE SYSTEM

NOTES:

1. LOCATING WIRE TO BE INSTALLED IN EITHER THE ONE OR ELEVEN O'CLOCK POSITION ON ALL DUCTILE IRON 0R PVC (PRESSURE MAINS). LOCATE WIRE SHALL ALSO BE INSTALLED ON ALL (HDPE) POLY MAIN PIPING (1:00 OR 11:00 POSITION, IF POSSIBLE).
2. SECURE LOCATING WIRE TO PVC & D.I.P. WATER MAIN BY USE OF DUCT TAPE OR ZIPPER TYPE PLASTIC TIE STRAPS SPACED AT A MAXIMUM DISTANCE OF TEN (10') AND AT EACH SIDE OF BELL JOINT OR FITTING.
3. THE ENTIRE LOCATING SYSTEM SHALL BE SUBJECTED TO TESTING TO DETERMINE ITS RELIABILITY. WHERE INSTALLED UNDER PAVEMENT AREAS, TESTING SHALL BE DONE PRIOR TO THE PLACEMENT OF PAVEMENT, UNLESS APPROVED OTHERWISE BY JEA.
4. LOCATING WIRE SHALL TERMINATE WITHIN AN ACTIVE VALVE BOX (WITH A VALVE) OR A METER BOX (IF NO VALVE) AT 475' INTERVALS. SEE DETAIL PLATE W-44B. WIRE CONNECTIONS BELOW GROUND (OUTSIDE OF A BOX) SHALL BE AVOIDED.
5. REFER TO SECTION 350 FOR LOCATE WIRE SPECIFICATIONS.
6. " " INDICATES THAT THE WIRES ARE CONNECTED TOGETHER WITH A WATERPROOF CONNECTION. (SEE DETAIL W-44B)
7. " " INDICATES A WIRE PIG-TAIL (4' LONG)
8. FOR FIRE HYDRANT LOCATE WIRE REQUIREMENTS AND EXCLUSIONS, SEE PLATES W-12,13 AND 14.
9. AN "LW" CUT SHALL BE CARVED IN THE CONCRETE CURB AND PAINTED AT ALL LOCATE WIRE BOXES.
10. FOUR LANES OF TRAFFIC (HAVING TWO LANES OF TRAFFIC IN EACH DIRECTION) OR GREATER THE LOCATE WIRE AND VALVE BOX SHALL BE OFF-SET TO THE RIGHT-OF-WAY.

LOCATE WIRE FOR BRANCH MAIN

PLATE W-44A

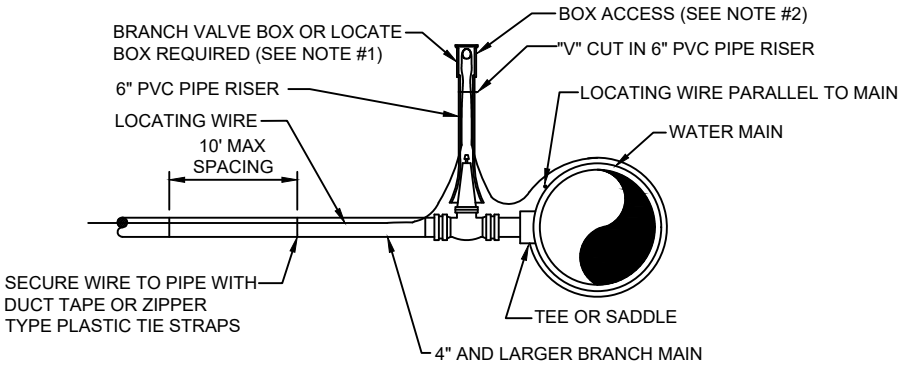

BRANCH FORCE MAIN

(2" AND LARGER WATER MAIN OR 3" AND LARGER WATER SERVICE PIPE)

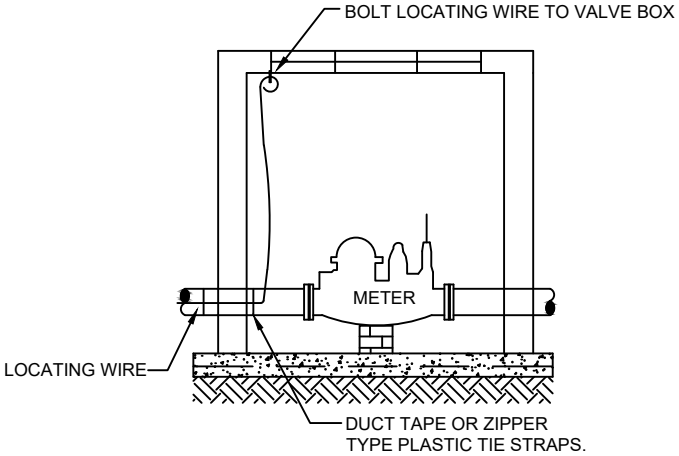

CONNECTION AT LARGE METER BOX

(3" OR LARGER SERVICE)

NOTES:

1. NOTE THAT THE BRANCH WIRE IS NOT CONNECTED TO THE MAIN WIRE.
2. LOCATE WIRE SHALL ENTER THE VALVE BOX THROUGH A "V" CUT IN THE 6" PVC RISER PIPE SECTION (SEE W-18).
3. LOCATE WIRE SHALL HAVE ENOUGH SLACK TO REACH 4' ABOVE FINAL GRADE AND LOCATE POINTS.

LOCATE WIRE BOX

PLATE W-44B

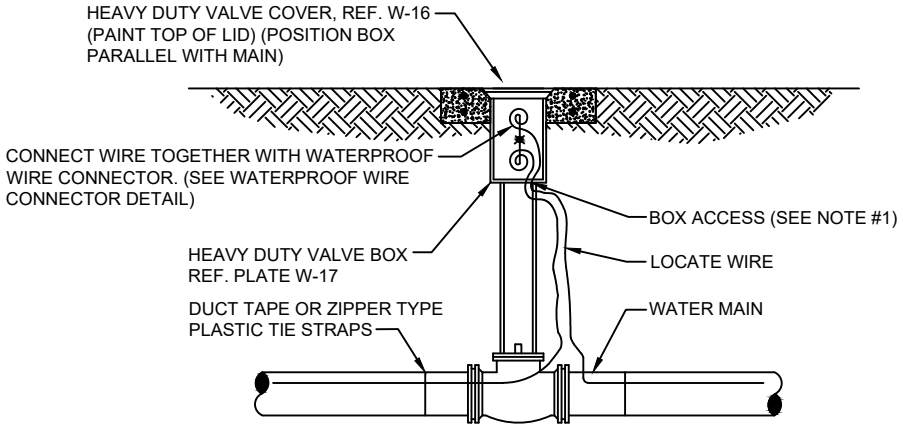

LOCATE WIRE BOX UTILIZING VALVE BOX

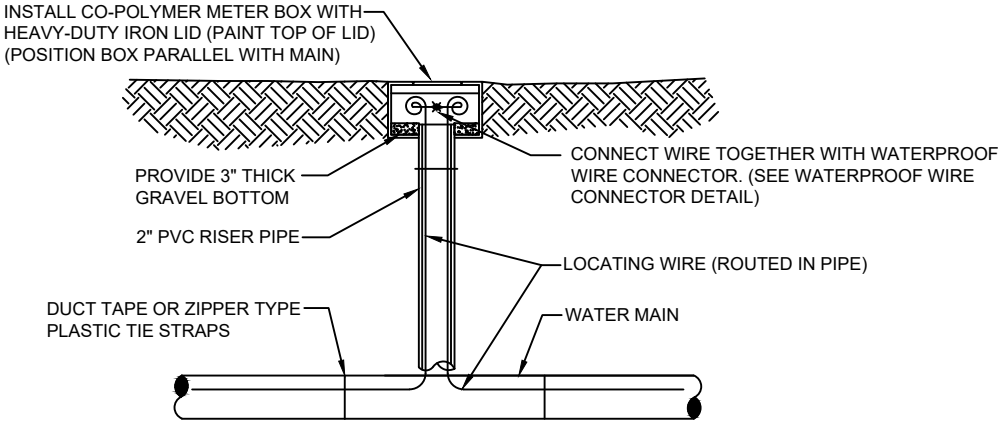

LOCATE WIRE BOX UTILIZING METER BOX

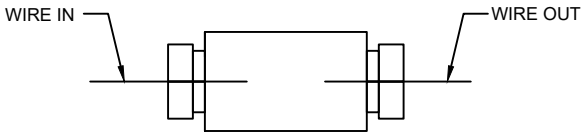

WATERPROOF WIRE CONNECTOR DETAIL

NOTES:

1. LOCATE WIRE SHALL ENTER THE VALVE BOX THROUGH A "V" CUT IN THE 6" PVC RISER PIPE (SEE W-18).
2. LOCATE WIRE SHALL HAVE ENOUGH SLACK TO REACH 4' ABOVE FINAL GRADE AND LOCATE POINTS.
3. LOCATE WIRE CONNECTION SHALL ONLY BE A 2 WAY CONNECTION.

WATER SYSTEM VALVE BOX COVER

PLATE W-16

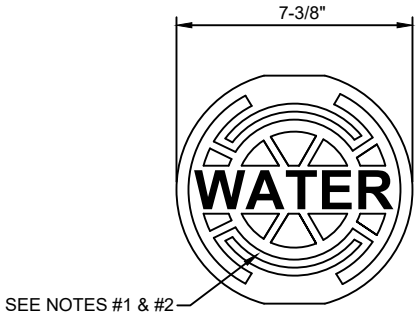

HEAVY DUTY RATING

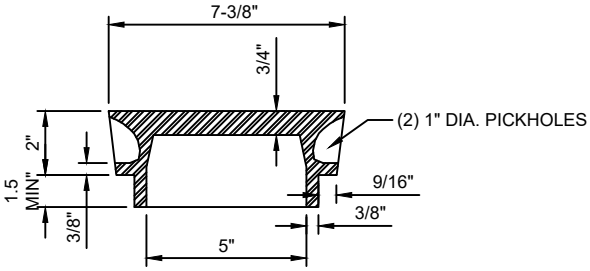

NOTES:

1. PAINT TOP OF THE COVER WITH ENAMEL PAINT (BLUE COLOR) FOR WATER.
2. FOR "REUSE" PAINT TOP PANTONE PURPLE.
3. LID WEIGHT: APPROX. 12 LBS.

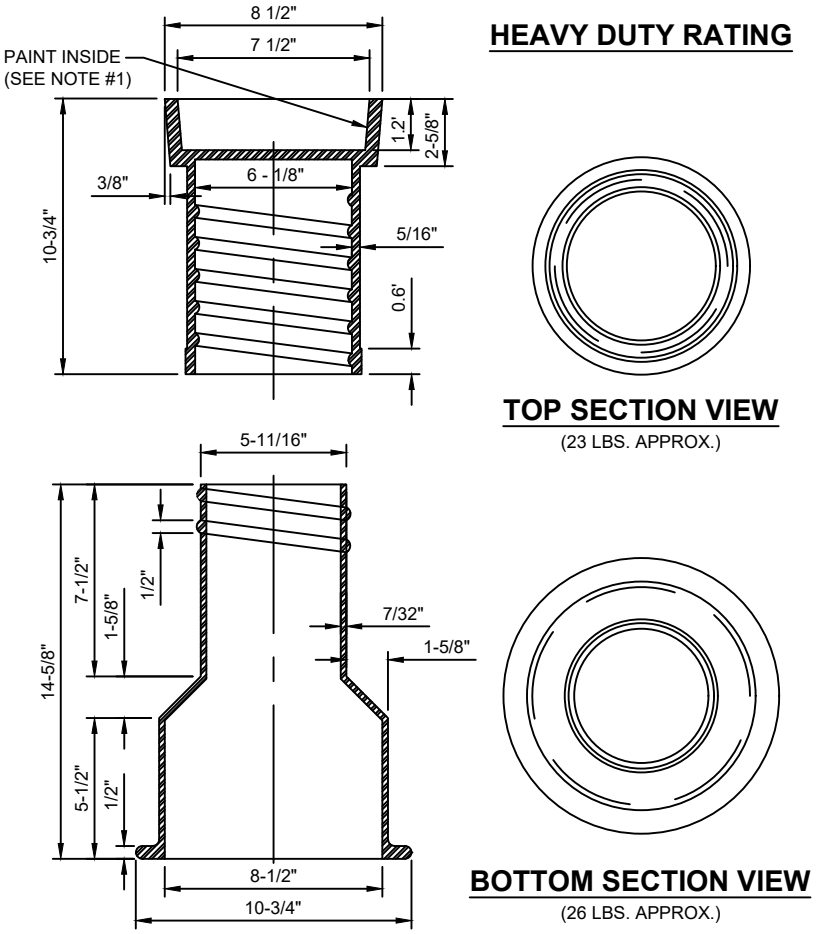

NOTES:

1. PAINT THE INSIDE OF THE TOP SECTION OF THE BOX WITH APPLICABLE COLOR (BLUE OR PURPLE)
2. HEAVY DUTY RATING (TOTAL WEIGHT APPROX. 50 LBS.).
3. REFERENCE SECTION 351, PARAGRAPH X.2.

WATER VALVE INSTALLATION DETAIL

PLATE W-18

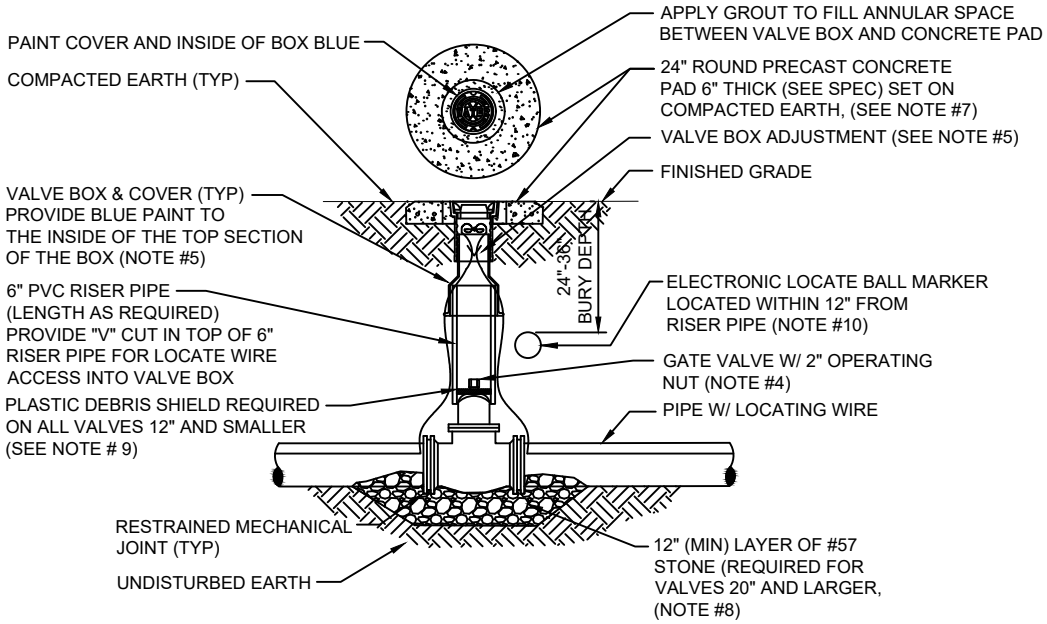

NOTES:

1. FOR UNPAVED LOCATIONS, A PRECAST CONCRETE VALVE PAD SHALL BE PROVIDED AND INSTALLED FLUSH WITH GRADE. CONCRETE PAD IS NOT REQUIRED FOR VALVE LOCATED IN THE ROADWAY, UNLESS SHOWN OR NOTED OTHERWISE.
2. LOCATING WIRE IS REQUIRED ON ALL PRESSURE PIPING (SEE DETAILW-44).
3. A "V" CUT SHALL BE CARVED IN THE CURB CLOSEST/ADJACENT/(ASPHALT IF NO CURB) TO ALL BELOW GRADE VALVES. THE "V" CUT IS TO BE PAINTED BLUE WATER/PURPLE RECLAIMED.
4. IN PAVED AREAS, INSTALL VALVE AT A DEPTH TO ALLOW A 12" MIN. DISTANCE BETWEEN THE VALVE COVER PLATE AND THE TOP OF THE VALVE OPERATING NUT. OUTSIDE OF PAVED AREAS (GRASS), INSTALL VALVE AT A DEPTH TO ALLOW A 6" MINIMUM DISTANCE BETWEEN THE VALVE COVER AND THE TOP OF THE VALVE OPERATING NUT. OPERATING NUT/STEM EXTENSION SHALL BE PROVIDED (WHERE APPLICABLE) SO THAT THE OPERATING NUT WILL BE NO MORE THAN 30 INCHES BELOW FINISHED GRADE.
5. FOR NEW CONSTRUCTION, THE VALVE BOX SHALL BE ADJUSTED TO MIDRANGE TO ALLOW FOR FUTURE BOX ADJUSTMENTS. ROUTE LOCATE WIRES THRU A "V" CUT IN THE TOP OF THE 6" PVC RISER PIPE FOR LOCATE WIRE ACCESS INTO VALVE BOX. THE LOCATE WIRES WITH A 24" LONG PIG-TAIL AT THE TOP SHALL BE CONNECTED TOGETHER WITH A WIRE NUT.
6. BRASS IDENTIFICATION TAG INDICATING "WATER", VALVE SIZE, DIRECTION AND TURNS TO OPEN & VALVE TYPE. PROVIDE A $\frac{1}{4}$" HOLE IN BRASS TAG AND ATTACH TAG (TWIST WIRE AROUND TAG) TO THE END OF THE LOCATE WIRE. TAGS ARE NOT REQUIRED ON VALVES INSTALLED ON FIRE HYDRANT BRANCH LINES.
7. IN LIEU OF PRECAST CONCRETE PAD, A 6" THICK X 24" (ROUND OR SQUARE) POURED CONCRETE PAD W/2 - #4 REBAR AROUND PERIMETER, MAY BE USED.
8. GRAVEL SHALL BE PROVIDED UNDER ALL VALVES 20" AND LARGER. THE MINIMUM VERTICAL LIMIT OF GRAVEL IS 12" UNDER THE VALVE UP TO $\frac{1}{3}$ THE OVERALL HEIGHT OF THE VALVE.
9. FOR VALVES 12 INCH AND SMALLER, PROVIDE A WHITE OR BLACK PLASTIC DEBRIS SHIELD WHICH INSTALLS BELOW THE OPERATING NUT. THIS SHIELD SHALL CENTER THE RISER PIPE BOX OVER THE OPERATING NUT AND MINIMIZE INFILTRATION. SHIELD SHALL BE BY AFC, BOXLOK OR APPROVED EQUAL.
10. ALL VALVES SHALL BE INSTALLED WITH AN ELECTRIC LOCATE MARKER. MARKER SHALL BE 4" DIA. COLOR CODED BALL MARKER (3M-1403XR FOR WATER AND 1408XR FOR RECLAIMED WATER).

WATER VALVE JACKET ADJUSTED TO ROADWAY AFTER RE-SURFACING

PLATE W-19

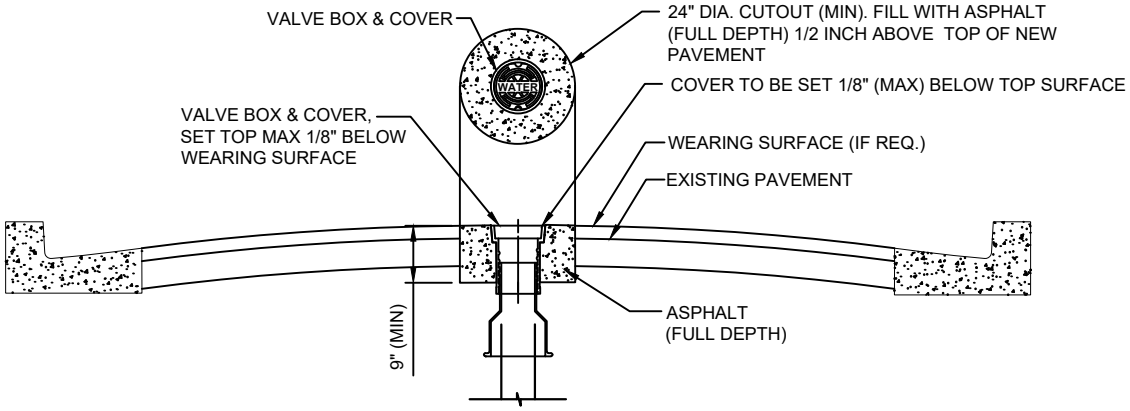

NOTES :

1. PROVIDE FULL DEPTH ASPHALT 1/2 INCH ABOVE TOP OF NEW PAVEMENT LEVEL, TO ALLOW FOR FUTURE ASPHALT MATERIAL COMPACTION. PLACE AND COMPACT ASPHALT IN 2" (MAX) LIFTS.

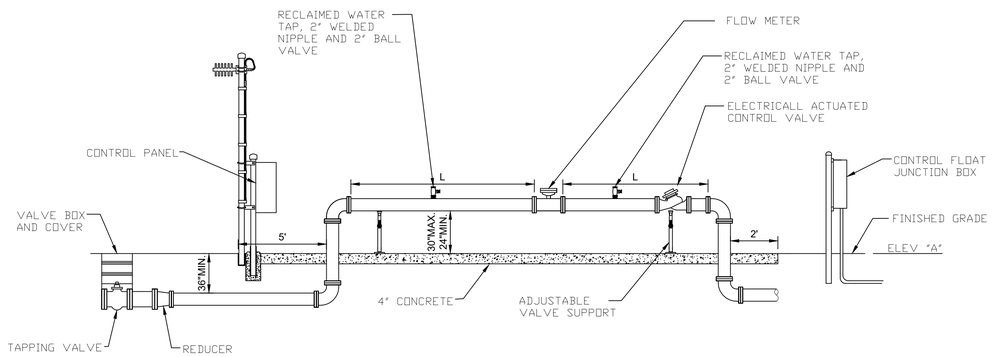

SECTION VIEW

NOT TO SCALE

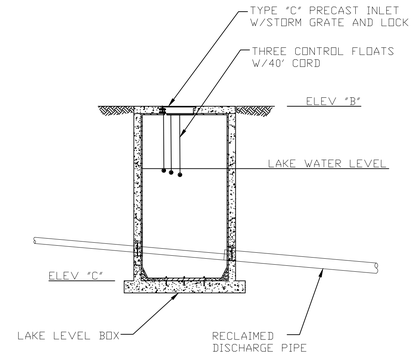

CONNECTION DETAIL

NOT TO SCALE

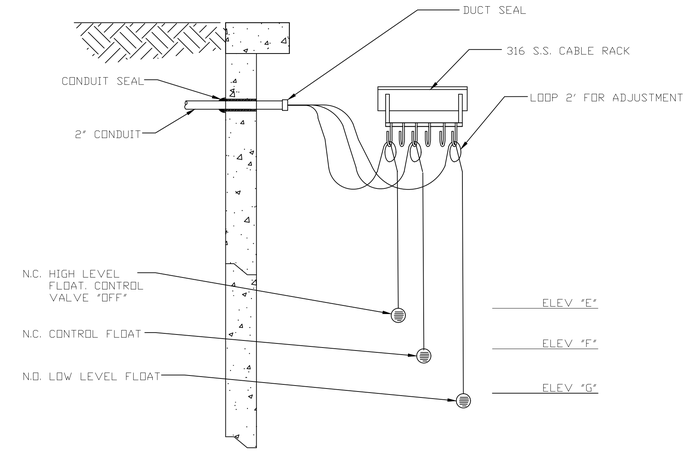

FLOAT STABILIZER BRACKET DETAIL

NOT TO SCALE

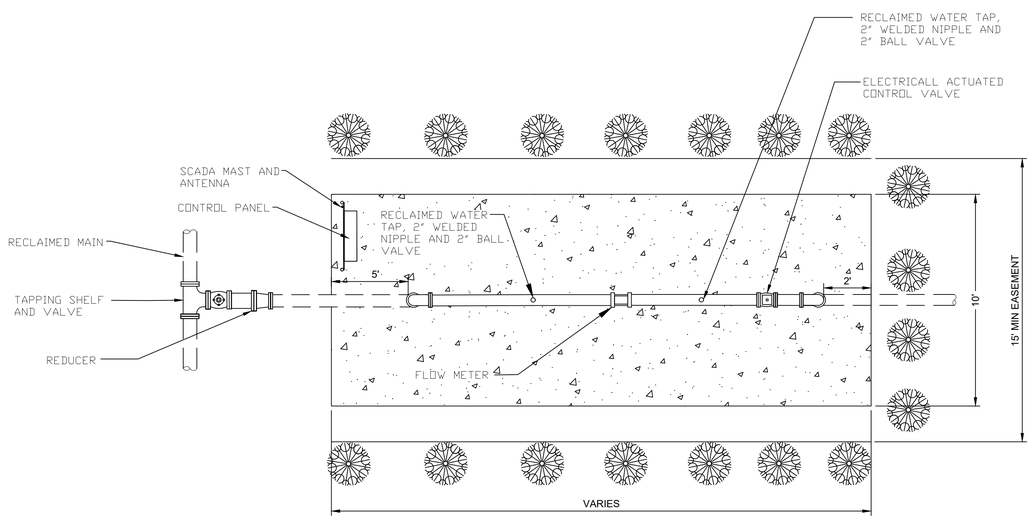

PLAN VIEW

NOT TO SCALE

GENERAL NOTES:

1. ALL WORK SHALL COMPLY WITH SPECIFICATIONS, SECTION 703, "RECLAIMED WATER DELIVERY STATIONS" IN JEA WATER AND SEWER STANDARDS MANUAL.
2. PRECAST STRUCTURE SHALL MEET A.S.T.M. C-478 STANDARD WITH 4,000 LB. CONCRETE TYPE II CEMENT. ALL LIFTING HOLES AND OUTSIDE INSERTS SHALL BE FILLED WITH NON-SHRINK GROUT AND COAT WITH BITUMINOUS WATERPROOFING MATERIAL.
3. ALL PRECAST STRUCTURE JOINTS BELOW THE TOP SECTION SHALL INCLUDE A 6" WIDE (MIN) EXTERIOR JOINT TAPE (W/PRIMER)
4. IN SILTS, CLAY OR HIGHLY ORGANIC SOILS (FINE-GRAINED SOILS INCLUDING SOIL GROUPS ML, CL, OL, MH, CH, OH AND PT) THE SOILS SHALL BE OVER-EXCAVATED AN ADDITIONAL 24" (AT MIN) AND BACKED FILLED WITH AASHTO CLASS A-3 SOIL (COMPACTED TO 98%, ASTM D1557) OR OVER-EXCAVATE AN ADDITIONAL 12" (AT MIN) AND BACK FILL WITH GRANULAR BACK FILL (57 STONE).
5. PIPING ABOVE GROUND SHALL BE 316 S.S. AND PIPING BELOW GROUND SHALL BE C-900 DR-25 OR DR-18. FITTING SHALL BE DUCTILE IRON.
6. A FLANGED SPOOL PIECE WITH A MINIMUM LENGTH OF FIVE PIPE DIAMETER SHALL BE INSTALLED ENTERING THE FLOW METER AND A FLANGED SPOOL PIECE WITH A MINIMUM LENGTH OF THREE PIPE DIAMETERS SHALL BE INSTALLED EXITING THE FLOW METER AND A FLANGED SPOOL PIECE WITH A MINIMUM LENGTH OF THREE PIPE DIAMETERS SHALL BE INSTALLED EXITING THE CONTROL VALVE.
7. FLOW METER, CONTROL VALVE, ORIFICE PLAT AND CONTROL PANEL TO BE PURCHASED FROM JEA APPROVED VENDOR.
8. DIMENSION "L" TO BE DESIGNED BY ENGINEER.
9. JEA TO FURNISH AND INSTALL MAST, ANTENNA AND PRESSURE TRANSDUCERS.
10. SUBMIT SHOP DRAWINGS FOR CONTROL PANEL, LAKE LEVEL BOX AND CONTROL VALVE.
11. SUBMIT RECORD DRAWINGS SHOWING FINISHED ELEVATIONS, COORDINATES OF CORNERS OF STRUCTURES, AND COORDINATES OF EASEMENT.
12. ALL REQUIREMENTS OF JEA "RULES AND REGULATIONS FOR WATER, SEWER AND RECLAIMED WATER SERVICES", LATEST EDITIONS, INCLUDING TAGGING, LABELS, SIGNAGE, PAINTING OF EXPOSED PIPING PANTONE PURPLE NO. 522, ETC. SHALL BE COMPLETED BEFORE DELIVERY STATION IS ACCEPTED.
13. PLACE GEOTEXTILE FABRIC AND SAND CEMENT BAGS OVER MAINTENANCE BERM. SIDE SLOPE OF BERM SHALL NOT BE LESS THAN 2:1. EXTEND BAGS TO TOP OF BERM AND T 2-FEET BEYOND POINT WHERE SIDE OF BERM MEETS EXISTING GROUND.
14. TYPE "C" PRECAST INLET BOX SHALL BE FURNISHED WITH AN ENVIRONMENT COMPOSITE, INC. MODEL CNFM NON-TRAFFIC RATED FIBERGLASS GRATE, 32LB MAX., IN LIEU OF A C.I. STORM GRATE (USE JEA APPROVED PRECASTERS).
15. CONTROL FLOATS SHALL BE SJE RHOMBUS SIGNALMASTER CONTROL SWITCH, 40' CORD LENGTH, MIN. TWO FLOATS SHALL BE NORMALLY CLOSED TYPE, AND ONE SHALL BE NORMALLY OPEN TYPE.

DELIVERY STATION PIPE/VALVE CAPACITY	
NOMINAL SIZE	PEAK DELIVERY RATE (GPM)
4-INCH	375
6-INCH	900
8-INCH	1500

ELEVATIONS		
LOCATION	ITEM	ELEVATION
"A"	SLAB	
"B"	LAKE LEVEL BOX-TOP	
"C"	LAKE LEVEL BOX-BOTTOM	
"E"	HIGH LEVEL FLOAT	
"F"	CONTROL FLOAT	
"G"	LOW LEVEL FLOAT	

NO.	BY	DATE	REVISIONS
6.			
5.			
4.			
3.			
2.			

DESIGN ENGINEER

FLORIDA REGISTRATION NO.

DESIGNER:
DRAWN BY:
DATE:
CHECKED BY:
DATE:

JEA Building Community

JEA STANDARD
RECLAIMED WATER DELIVERY STATION DETAILS
PIPING LAYOUT

PROJ. NO.
DATE: JANUARY 2021
SCALE: NTS

NO. SHEETS
SHEET NO.
DRAWING NO.

C:\Users\henria\AppData\Local\Temp\AcPublish_11844\RECLAIMED WATER DELIVERY STATION DETAILS.dwg Current Layout Tab = SITE PLAN & PIPING LAYOUT Thu Feb 25, 2021 - 09:47

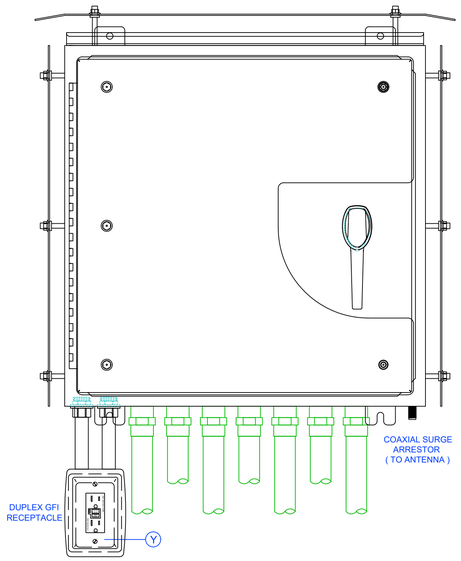

GENERAL NOTES:

1. REFER TO "REUSE STATION CONTROLS SPECIFICATION" FOR FURTHER DETAILS THAT MUST BE ADHERED TO.
2. THIS DRAWING IS AN EXAMPLE OF HOW OVERALL CABINET IS TO BE DESIGNED.
3. REFER TO NOTES AND DETAILS ON ALL DRAWING SHEETS.
4. ALL FIELD WIRING SHALL BE #14 AWG STRANDED, TIN-PLATED COPPER.
5. ALL PLC I/O WIRING SHALL BE #18 AWG.
6. ALL MOUNTING SCREWS SHALL BE DRILLED AND TAPPED (NO SELF-TAPPING SCREWS ARE ALLOWED).
7. ALL MOUNTING SCREWS SHALL BE STAINLESS STEEL.

CONTROL WIRE UL508A COLOR:

RED	- 120 VAC
WHITE	- NEUTRAL
BLUE	- +24 VDC
WHITE / BLUE STRIPE	- 0 VDC

DRAWING LAYER COLOR LEGEND:

GREY	- NOTES
BLACK	- ELECTRICAL SCHEMATIC WIRING DIAGRAMS AND DEVICES
BLUE	- PART IDENTIFICATION
PURPLE	- WIRE NUMBERS
GREEN	- FIELD DEVICES AND WIRING OUTSIDE ENCLOSURE (DASHED)
RED	- FUTURE DEVICES AND WIRING
TEAL	- DIMENSIONS

FRONT PANEL VIEW

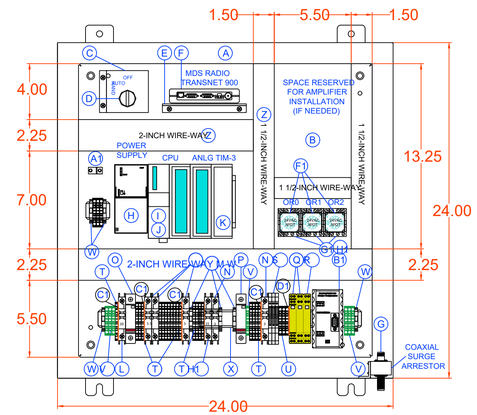

ENCLOSURE:
SPN12AL-242410-1532 (24"H x 24"W x 10"D) NEMA 12/3R RATED, FABRICATED FROM .125 MARINE GRADE ALUMINUM WITH WHITE POLYESTER POWDER COAT FINISH INSIDE AND OUT. OUTER DOOR HAS 3-POINT PADLOCKABLE HANDLE. ENCLOSURE HAS ALUMINUM SUNSHIELDS MOUNTED ON TOP, FRONT, AND BOTH SIDES, AND INCLUDES A DRIPSHIELD.

BACK PANEL:
SPP-2424 (21"H x 21"W) FABRICATED FROM 12 ga. CARBON STEEL WITH, WHITE INDUSTRIAL GRADE ENAMEL FINISH.

REFER TO ENCLOSURE SPECIFICATIONS FOR FURTHER DETAILS.

BACK PANEL LAYOUT

BILL of MATERIALS

	QTY	MANUFACTURER	PART NUMBER	DESCRIPTION
A	1	SCHAEFER	SPN12AL-242410-1532	ENCLOSURE, NEMA 12/3R, ALUM, WHITE
B	1	SCHAEFER	SPP-2424	BACK PANEL, CARBON STEEL, WHITE
C	1	ECS	-	CUSTOM SWITCH BRACKET
D	1	SQUARE D	9001 SKS43B	3 POSITION SWITCH, 30mm, MAINTAINED
	1	SQUARE D	9001 KA1	CONTACT BLOCK, 1 N.O. - 1 N.C.
E	1	ECS	-	CUSTOM RADIO BRACKET
F	1	MDS	TRANSNET 900	SPREAD-SPECTRUM RADIO
	1	TIMES MICROWAVE	EZ400NMHD N MALE LMR400	EZ400NMHD N MALE LMR400
	1	TIMES MICROWAVE	FPCTTS000005	CONNECTOR, TNC, MALE RA LMR400
G	1	POLYPHASER	FPPLTS00002	ANTENNA COAXIAL SURGE ARRESTOR
H	1	SIEMENS	6ES7 307-1EA01-0AA0	24VDC POWER SUPPLY, 5 AMP
I	1	SIEMENS	6ES7 313-6CG04-0AB0	PLC, CPU313C-2 DP 16 DI - 16 DO
	1	SIEMENS	6ES7 953-8LG31-0AA0	MMC MEMORY CARD, 128KB
	1	SIEMENS	6ES7 331-1KF02-0AB0	ANALOG INPUT MODULE, 8 CHANNEL
	2	SIEMENS	6ES7 392-1BM01-0AA0	40-PIN SCREW CONNECTOR
	1	SIEMENS	6ES7 390-1AE80-0AA0	480mm MOUNTING RAIL FOR PLC
J	1	MOLEX	1201 030 001 (PA9D01-42)	PROFIBUS CONNECTOR, 90-DEGREE
K	1	SIEMENS	6NH7 800-3BA00	SINAUT ST7 MODULE, TIM 3V-IE
	1	TFS, INC (Note 1)	9-PIN / 25-PIN RS232	CABLE SINAUT TO RADIO NULL CABLE
L	1	PHOENIX CONTACT	2907573	CB, 1 POLE, 20A, BRANCH RATED, UL489
M	3	PHOENIX CONTACT	2907562	CB, 1 POLE, 5A, BRANCH RATED, UL489
N	2	PHOENIX CONTACT	2907560	CB, 1 POLE, 3A, BRANCH RATED, UL489
O	1	CITEL	DS415-120	120VAC SURGE SUPPRESSOR
P	1	CITEL	DS220S-24DC	24VDC SURGE SUPPRESSOR
Q	2	CITEL	DLAW-24D3	ANALOG SURGE SUPPRESSOR
R	1	CITEL	DLA-06D3	PROFIBUS SURGE PROTECTOR
S	3	FINDER	4CP190245050	RELAY, 24VDC, INDICATOR, SCREW
T	20	WAGO	2002-1401	TERMINAL, SINGLE, SCREW, BEIGE
U	3	WAGO	2002-2201	TERMINAL, DOUBLE, SCREW, BEIGE
V	6	WAGO	2002-1207	TERMINAL, GROUND, SCREW, GRN / YEL
W	4	WAGO	249-116	TERMINAL END RETAINER, BEIGE
X	1	WEIDMULLER	0514 50 0000	DIN RAIL, GALVANIZED, SLOTTED
Y	1	HUBBELL	GFWRST20W	DUPLEX GFCI RECEPTACLE, 20 AMP
Z	1	PANDUIT	H2X2LG6 / H1.5X2LG6	WIRE-WAY, HINGED COVER, WIDE FINGER
A1	1	PANDUIT	LAMA2-14-QY	GROUND LUG, DUAL RATED, #2-14 AWG
B1	1	PROCENTEC	101-0021-1A	PROFIBUS TERMINATOR RESISTOR
C1	1	WAGO	2002-1492	TERMINAL END / PARTITION PLATE
D1	1	WAGO	2002-2292	TERMINAL END / PARTITION PLATE
E1	3	SQUARE D	RUMC32BD	RELAY, 24VDC, INDICATOR, SCREW
F1	3	SQUARE D	RUZ52CM	RELAY BASE, PLUG-IN, 11 PIN
G1	3	SQUARE D	RUW241P7	RC CIRCUIT, 110-240VAC
H1	1	PHOENIX CONTACT	2907571	CB, 1 POLE, 15A, BRANCH RATED, UL489

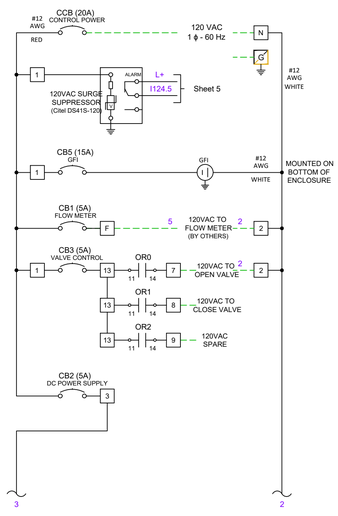

120 VAC VOLTAGE

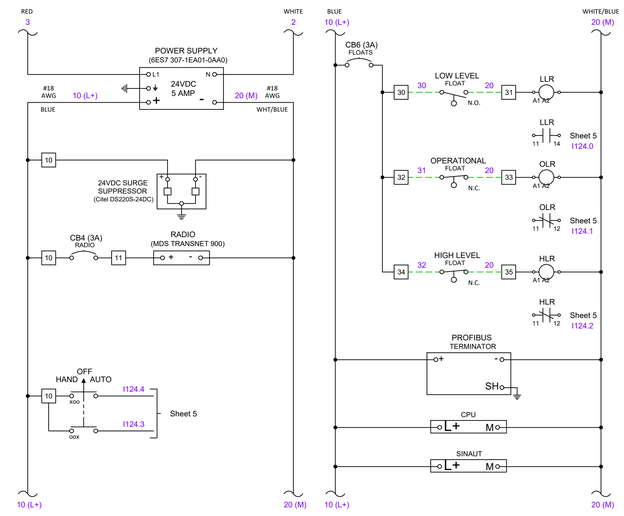

24 VDC VOLTAGE

REVISIONS

NO.	BY	DATE
5		
4		
3		
2		

DESIGN ENGINEER

FLORIDA REGISTRATION NO.

DESIGNER:
DRAWN BY:
DATE:
CHECKED BY:
DATE:

JEA Building Community

JEA STANDARD
RECLAIMED WATER DELIVERY STATION DETAILS
ELECTRICAL SCHEMATIC

PROJ. NO.
DATE: JANUARY 2021
SCALE: NTS

NO. SHEETS
SHEET NO.
DRAWING NO.

C:\Users\henria\AppData\Local\Temp\AcPublish_11844\RECLAIMED WATER DELIVERY STATION DETAILS.dwg Current Layout Tab = ELECTRICAL SCHEMATIC 1 Thu Feb 25, 2021 - 09:47

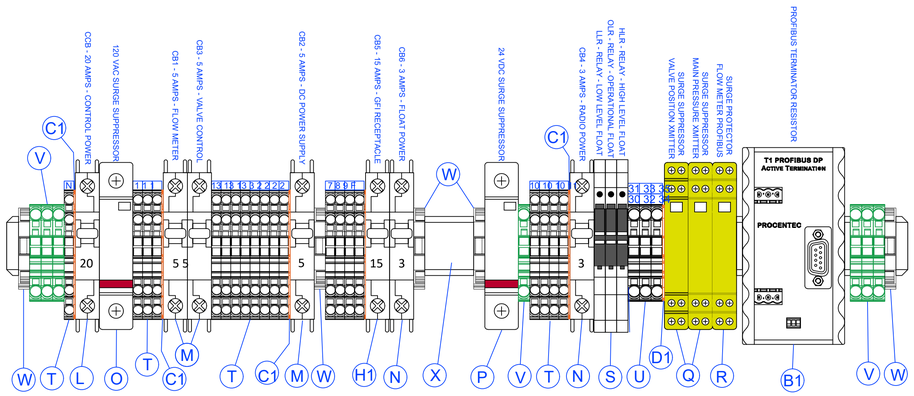

TERMINAL BLOCK LAYOUT

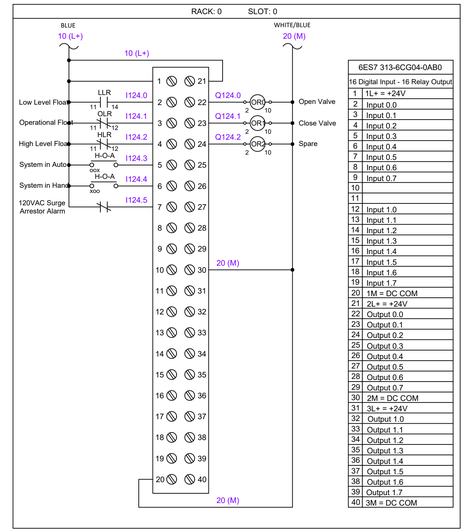

6ES7 313-6CG04-0AB0	
16 Digital Input - 16 Relay Output	
1	1L+ = +24V
2	Input 0.0
3	Input 0.1
4	Input 0.2
5	Input 0.3
6	Input 0.4
7	Input 0.5
8	Input 0.6
9	Input 0.7
10	
11	
12	Input 1.0
13	Input 1.1
14	Input 1.2
15	Input 1.3
16	Input 1.4
17	Input 1.5
18	Input 1.6
19	Input 1.7
20	1M = DC COM
21	2L+ = +24V
22	Output 0.0
23	Output 0.1
24	Output 0.2
25	Output 0.3
26	Output 0.4
27	Output 0.5
28	Output 0.6
29	Output 0.7
30	2M = DC COM
31	3L + = +24V
32	Output 1.0
33	Output 1.1
34	Output 1.2
35	Output 1.3
36	Output 1.4
37	Output 1.5
38	Output 1.6
39	Output 1.7
40	3M = DC COM

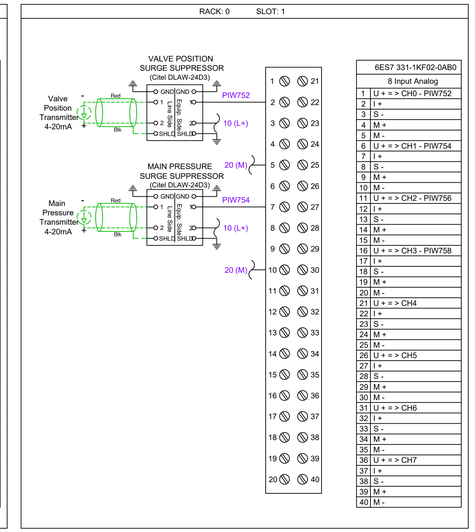

6ES7 331-1KF02-0AB0	
8 Input Analog	
1	U + = > CH0 - PIW752
2	I +
3	S -
4	M +
5	M -
6	U + = > CH1 - PIW754
7	I +
8	S -
9	M +
10	M -
11	U + = > CH2 - PIW756
12	I +
13	S -
14	M +
15	M -
16	U + = > CH3 - PIW758
17	I +
18	S -
19	M +
20	M -
21	U + = > CH4
22	I +
23	S -
24	M +
25	M -
26	U + = > CH5
27	I +
28	S -
29	M +
30	M -
31	U + = > CH6
32	I +
33	S -
34	M +
35	M -
36	U + = > CH7
37	I +
38	S -
39	M +
40	M -

PLC INPUT - OUTPUT

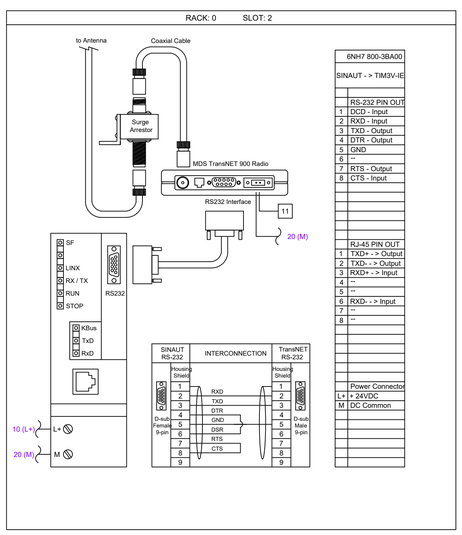

6NH7 800-3BA00	
SINAUT - > TIM3V-IE	
	RS-232 PIN OUT
1	DCD - Input
2	RXD - Input
3	TXD - Output
4	DTR - Output
5	GND
6	--
7	RTS - Output
8	CTS - Input
	RJ-45 PIN OUT
1	TXD+ - > Output
2	TXD- - > Output
3	RXD+ - > Input
4	--
5	--
6	RXD- - > Input
7	--
8	--
	Power Connector
L+	+ 24VDC
M	DC Common

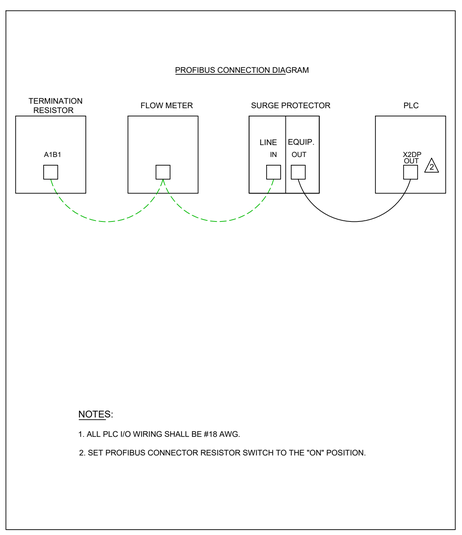

NOTES:

1. ALL PLC I/O WIRING SHALL BE #18 AWG.
2. SET PROFIBUS CONNECTOR RESISTOR SWITCH TO THE "ON" POSITION.

PLC LAYOUT & CONNECTION

NO.	BY	DATE	REVISIONS
6			
5			
4			
3			
2			
1			

DESIGN ENGINEER

FLORIDA REGISTRATION NO.

DESIGNER:
DRAWN BY:
DATE:
CHECKED BY:
DATE:

JEA Building Community

JEA STANDARD
RECLAIMED WATER DELIVERY STATION DETAILS
ELECTRICAL SCHEMATIC

PROJ. NO.
DATE: JANUARY 2021
SCALE: NTS

NO. SHEETS
SHEET NO.
DRAWING NO.

C:\Users\henria\AppData\Local\Temp\AcPublish_11844\RECLAIMED WATER DELIVERY STATION DETAILS.dwg Current Layout Tab = ELECTRICAL SCHEMATIC 2 Thu Feb 25, 2021 - 09:47

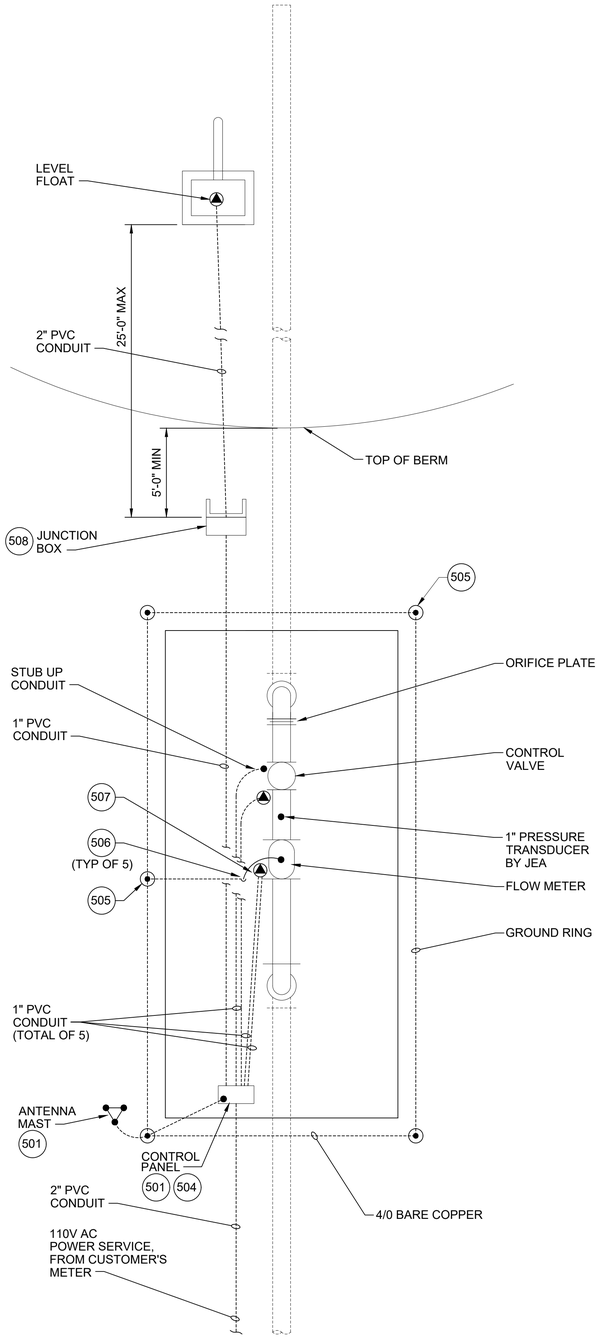

WELL AND GROUNDING PLAN

NOTES:

1. JEA TO FURNISH POLE MOUNTED SERVICE TRANSFORMERS. CONTRACTOR TO PROVIDE DIRECT BURIAL CONDUIT WITH CONDUCTORS FROM CONTROL PANEL TO SERVICE BOX. CONTRACTOR SHALL COORDINATE CONDUIT ROUTING, SERVICE TRANSFORMER LOCATION, AND SERVICE BOX LOCATION WITH JEA, (REVIEW JEA RULES AND REGULATIONS FOR ELECTRIC SERVICE). PROVIDE A MINIMUM OF 42" COVER FOR CONDUIT AND CONTACT JEA FOR INSPECTION 24 HOURS BEFORE BACKFILLING TRENCH.
2. CONTROL PANEL AND FLOW METER TO BE PURCHASED FROM JEA VENDOR AND INSTALLED BY CONTRACTOR.
3. ANTENNA, MAST, AND ANTENNA CABLES TO BE FURNISHED AND INSTALLED BY JEA. COORDINATE WITH JEA PRIOR TO SLAB CONSTRUCTION.
4. PROVIDE DEDICATED GROUND ROD FOR FLOW METER. FLOW TUBE TO BE GROUNDED TO SAME GROUND ROD.
5. ALL CONDUIT RUNS SHALL BE WITHIN OR BENEATH THE SLAB.
6. CONTRACTOR SHALL INSTALL ALL JEA PROVIDED INSTRUMENTATION/ EQUIPMENT IN ACCORDACE WITH MANUFACTURER RECOMMENDATIONS. CONTRACTOR IS RESPONSIBLE FOR OBTAINING ALL RELEVANT INSTALLATION DOCUMENTATION FROM JEA FOR ALL INSTRUMENTS/ EQUIPMENT AND IMPLEMENT MANUFACTURER'S RECOMMENDATIONS DURING INSTALLATION AND TESTING OF ALL INSTALLED INSTRUMENTS/EQUIPMENT.
7. PROVIDE SCHEDULE 80 PVC CONDUIT BELOW AND ABOVE THE SLAB. CONTRACTOR SHALL CONTACT JEA 24 HOURS PRIOR TO POURING OF CONCRETE SLAB FOR INSPECTION OF UNDER SLAB CONDUITS.
8. PROVIDE GROUND WELLS WITH TRAFFIC RATED ENCLOSURES AND LIDS LABELED "GROUNDING".
9. CONTRACTOR SHALL PROVIDE ALL WIRING REQUIRED TO CONNECT OWNER FURNISHED INSTRUMENTS. CONTRACTOR SHALL VERIFY WIRING REQUIREMENTS WITH THE OWNER'S INSTRUMENT SUPPLIER.

CONTROL CONDUIT SCHEDULE

QUANTITY	SIZE	LOCATION	WIRES
1	1"	PANEL TO CONTROL VALVE (SOLENOID VALVE)	3 #16 (WHITE, BLUE, RED) + GROUND
1	1"	PANEL TO CONTROL VALVE (POSITION INDICATOR) & UPSTREAM PSI TRANSMITTER	CONDUIT TO BE TERMINATED WITH AN ACCESS TEE; PULL TWO (2) SEPARATE #18 TWISTED SHIELDED PAIR*
1	1"	PANEL TO FLOW METER	ONE(1) POWER CABLE + ONE(1) SIGNAL CABLE. FURNISHED WITH ENDRESS HAUSER MAGNETIC FLOWMETER.
1	1"	PANEL TO JUNCTION BOX	FOUR(4) #16 (WHITE, BLUE, RED, ORANGE)
1	2"	JUNCTION BOX TO TYPE "C" LAKE INLET BOX	CONTROL CABLES FROM 3 LEVEL FLOATS

*JEA WILL BE RESPONSIBLE FOR FINAL WIRING TO CONTROL VALVE POSITION TRANSMITTER AND TO JEA-FURNISHED UPSTREAM PRESSURE TRANSMITTER

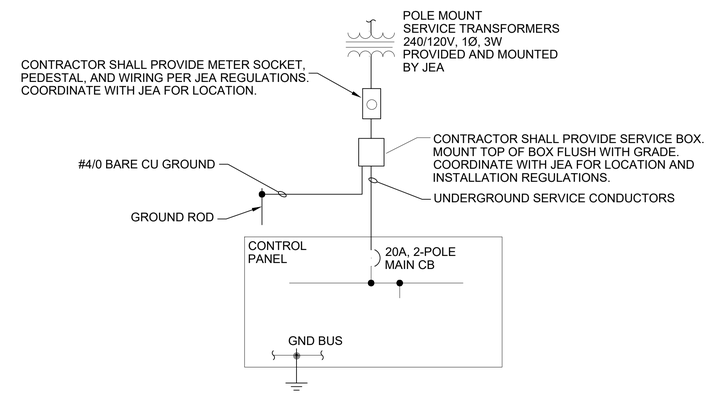

NOTES:

1. PROVIDE SERVICE ENTRANCE RATED MAIN BREAKER WITH TVSS.
2. PROVIDE (4) 20A-1 POLE CIRCUIT BREAKERS. (2-SPARE)
3. COORDINATE CIRCUIT BREAKER INTERRUPT RATINGS WITH UTILITY BEFORE INSTALLATION.

ONE LINE DIAGRAM

NO.	BY	DATE	REVISIONS
6.			
5.			
4.			
3.			
2.			
1.			

DESIGN ENGINEER

FLORIDA REGISTRATION NO.

DESIGNER:
DRAWN BY:
DATE:
CHECKED BY:
DATE:

JEA Building Community

JEA STANDARD
RECLAIMED WATER DELIVERY STATION DETAILS
GROUNDING PLAN

PROJ. NO.
DATE: JANUARY 2021
SCALE: NTS

NO. SHEETS
SHEET NO.
DRAWING NO.

C:\Users\henrq\AppData\Local\Temp\AcPublish_11844\RECLAIMED WATER DELIVERY STATION DETAILS.dwg Current Layout Tab = GROUNDING PLAN Thu Feb 25, 2021 - 09:47

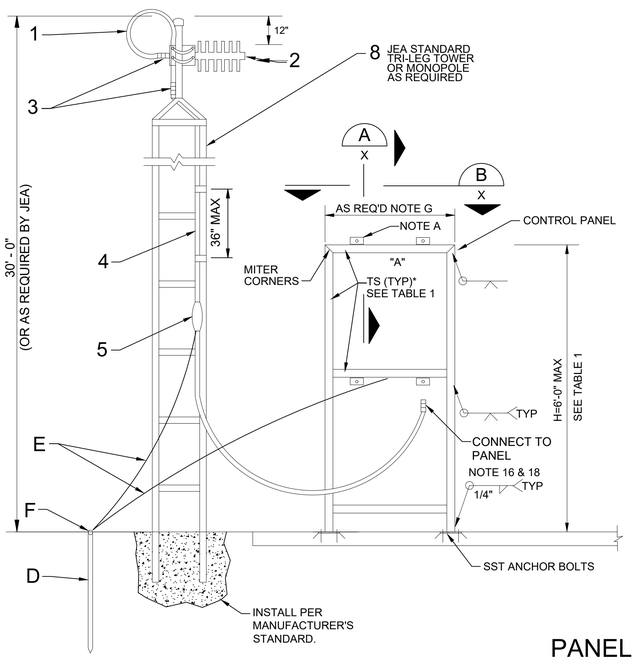

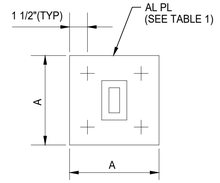

BASE PLATE

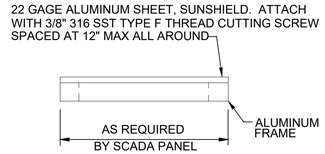

SECTION "B"

TABLE 1			
HEIGHT "H"	ALUMINUM FRAME		
	TS (MIN SIZE)	BASE PLATE (IN)	
		A	t
6'-0" MAX.	TS 4 x 4 x.188	9	5/8

NOTES:

INSTALL THE FOLLOWING COMPONENTS AS PER MANUFACTURER INSTALLATION INSTRUCTIONS

A. PROVIDE L 2 1/2"x 2 1/2"x 1/4"x 0'-3" WELD ALL AROUND TO TS: TYP AT EACH PANEL MOUNT. → SECTION "A"

B. GRIND ALL WELDS AND SHARP CORNERS SMOOTH.

C. PANEL OR INSTRUMENT FRONT FACES NORTH, UNLESS OTHERWISE NOTED.

D. GROUND ROD, MANUFACTURER: APACHE MODEL NUMBER: GRS588, 20-FEET LONG

E. #4 SOLID COPPER GROUND WIRE, MANUFACTURER: COPPERWELD BIMETALLIC GROUP MODEL NUMBER: #4 COPPERWELD

F. ACORN CLAMP, MANUFACTURER: RICHARDS MODEL NUMBER: ACRN-5/8

G. DIMENSION AS REQUIRED BY SCADA PANEL PROVIDED BY JEA. DETERMINE LENGTH PRIOR TO FABRICATION.

JEA FURNISHES AND INSTALLS THE FOLLOWING:

1. FLEX COAX JUMPER, MANUFACTURER: TESSCO MODEL NUMBER: SKU 45013
2. YAGI ANTENNA, COMES W/ MOUNTING HARDWARE, MANUFACTURER: SCALA MODEL NUMBER: TY-900
3. COAX CONNECTOR W/ BARREL ADAPTER, MANUFACTURER: RFS CABLEWAVE/AMPHENOL MODEL NUMBER: 738802/UG-29B
4. 1/2" COAX CABLE, MANUFACTURER: WIRELESS SOLUTIONS MODEL NUMBER: WO500
5. COAX GROUND, MANUFACTURER: WIRELESS SOLUTIONS MODEL NUMBER: WGK-S12
6. COAX CABLE SHALL BE SECURED TO POLE VIA A STAINLESS STEEL BAND FASTENER AND A STAINLESS STEEL CABLE HARNESS.
7. WHERE ANTENNA CABLE ENTERS PANEL INSTALL LIGHTNING ARRESTER (ANDREWS QUARTER WAVE SHORT STUB), JUMPER CABLE TO RADIO, AND CONNECTION TO GROUND
8. JEA STANDARD TRI-LEG TOWER OR POLE MAST. POLE MAST SHALL BE CAST IN SLAB NEXT TO PANEL. POLE MAST REQUIRES 3-INCH SLEEVE IN SLAB. POLE SHALL BE FASTENED AND SUPPORTED BY PANEL STAND. COORDINATE WITH JEA PRIOR TO SLAB CONSTRUCTION.

PANEL MOUNTING RACK & TYPICAL MAST POLE INSTALLATION

NTS

501

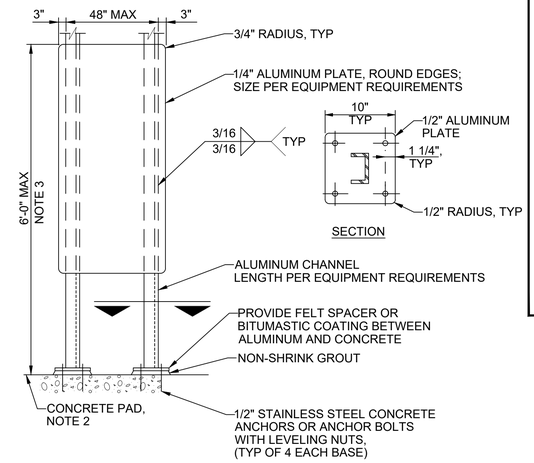

NOTES:

1. USE STAINLESS STEEL MOUNTING HARDWARE. USE WASHER AND SPLIT LOCK WASHER UNDER ALL NUTS.
2. PROVIDE A 4 INCH THICK CONCRETE PAD AT GRADE WITH WELDED WIRE FABRIC. THE PAD SHALL BE 12 INCHES LONGER THAN THE MOUNTING PLATE BY ONE HALF THE HEIGHT OF THE MOUNTING PLATE ABOVE FINISHED GRADE. MINIMUM WIDTH OF 24 INCHES.

ELECTRICAL EQUIPMENT SUPPORT

NTS

504

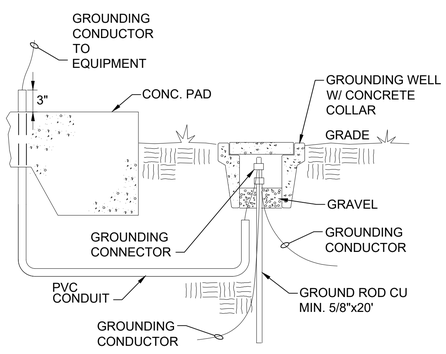

GROUNDING CONNECTOR

NTS

505

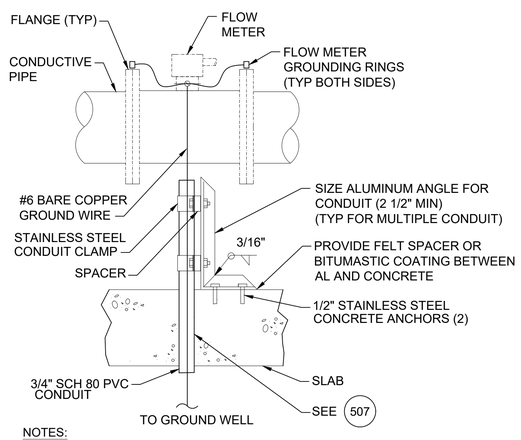

NOTES:

1. GROUNDING SHALL COMPLY WITH NEC ARTICLE 250 AND ANY LOCAL APPLICABLE CODES.
2. INSTALL GROUND WIRE CONTINUOUSLY THROUGH GROUND LUG. TIGHTEN LUG SCREW. GROUND WIRE SHALL EXTEND UP SUPPORT POST, AROUND SUNSHIELD TO BE TERMINATED ON GROUND WIRE TERMINAL STRIP WITHIN INSTRUMENT ENCLOSURE. SECURE GROUND WIRE TO SUPPORT POST VIA STAINLESS STEEL BAND FASTENERS WITH SCREW TYPE TIGHTENING MECHANISM.
3. ALL GROUND FASTENERS, REGARDLESS OF TYPE (SECURING TO POST OR TO CONCRETE), SHALL BE STAINLESS STEEL.
4. FOLLOW FLOW METER MANUFACTURER'S INSTRUCTIONS FOR EXTERNAL GROUNDING. FOR CONDUCTIVE PIPE, CONNECT BETWEEN THE GROUNDING TERMINAL AND BOTH ENDS OF THE GROUNDING RINGS WITH HEAVY COPPER BRAID OR WIRE.

TYPICAL GROUNDING DETAILS

NTS

506

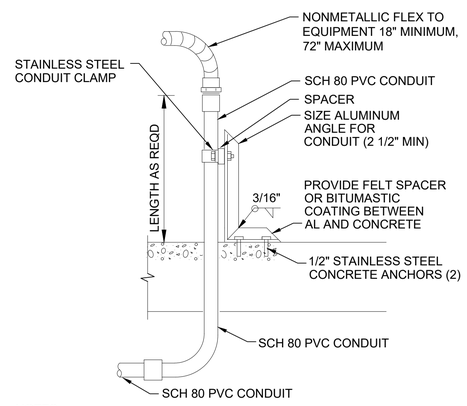

NOTES:

1. PROVIDE SUPPORT FOR ALL PVC CONDUIT WITHIN 3 INCHES OF THE END OF THE CONDUIT.
2. LOCATE CONDUITS IN CLOSE PROXIMITY TO TERMINATION POINT TO MINIMIZE LENGTH OF FLEXIBLE NON-METALLIC CONDUIT; MAXIMUM LENGTH OF 6' PER NEC.

CONDUIT TRANSITION AND SUPPORT DETAIL

NTS

507

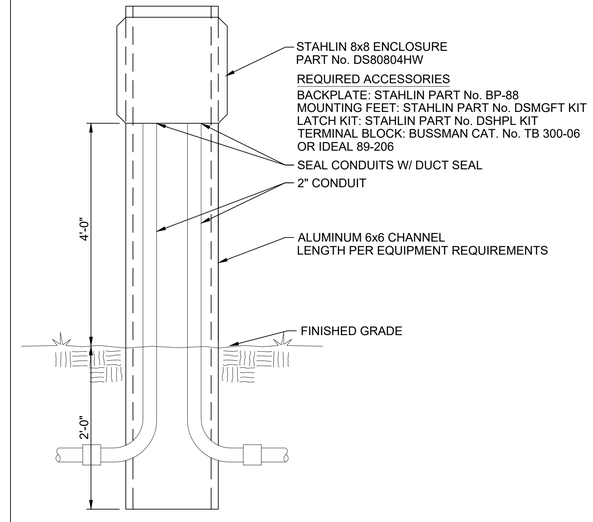

NOTES:

1. USE STAINLESS STEEL MOUNTING HARDWARE. USE WASHER AND SPLIT LOCK WASHER UNDER ALL NUTS.

FLOAT CONTROL JUNCTION BOX

NTS

508

NO.	BY	DATE	REVISIONS
6			
5			
4			
3			
2			
1			

DESIGN ENGINEER

FLORIDA REGISTRATION NO.

DESIGNER:
DRAWN BY:
DATE:
CHECKED BY:
DATE:

JEA Building Community

JEA STANDARD
RECLAIMED WATER DELIVERY STATION DETAILS
ELECTRICAL DETAIL

NO. SHEETS
SHEET NO.
DRAWING NO.
PROJ. NO.
DATE: JANUARY 2021
SCALE: NTS

C:\Users\henrja\AppData\Local\Temp\AcPublish_11844\RECLAIMED WATER DELIVERY STATION DETAILS.dwg Current Layout Tab = ELECTRICAL DETAIL Thu Feb 25, 2021 - 09:47

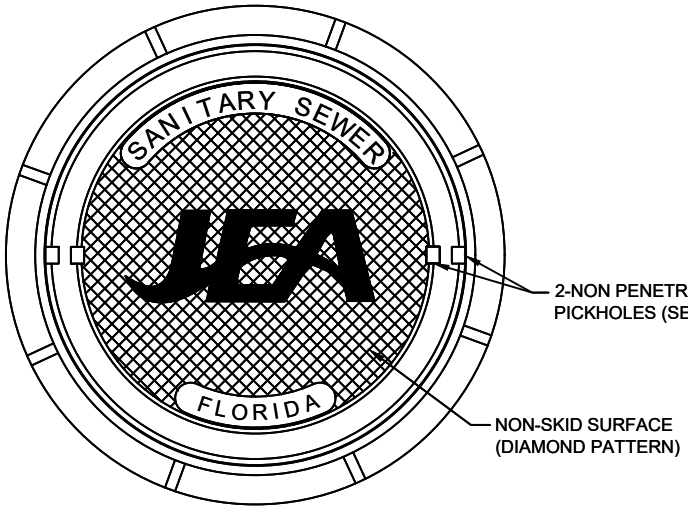

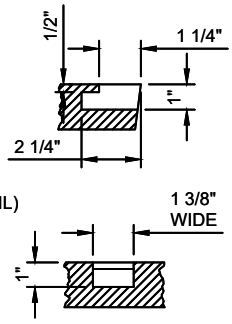

PICKHOLE DETAIL

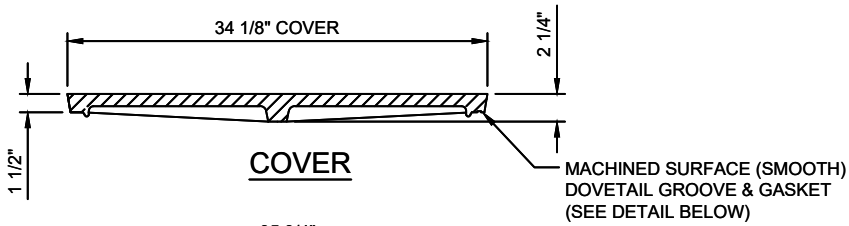

COVER

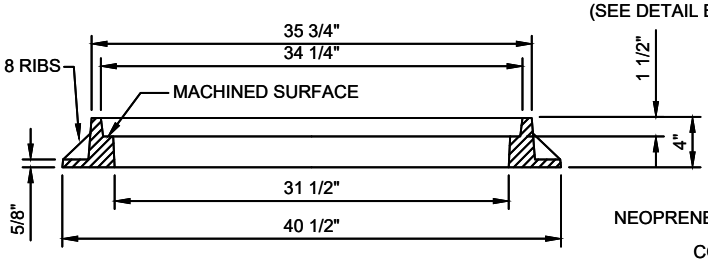

RING

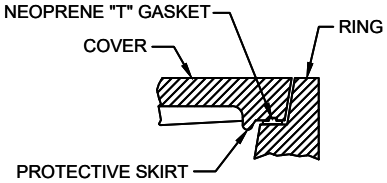

GROOVE & GASKET DETAIL

NOTES:

1. MATERIAL: ASTM A-48 CLASS 35B GRAY IRON.
2. RING WEIGHT 230 LBS APPROX.
3. COVER WEIGHT 230 LBS. APPROX.
4. ALL DIMENSIONS ARE SHOWN IN INCHES.
5. FOR MANHOLES WHICH WILL BE MAINTAINED BY JEA (INCLUDING UTILITY DEDICATION PROJECTS), THE COVER SHALL INCLUDE THE "JEA" LOGO AND A NEOPRENE GASKET.
6. FOR MANHOLES WHICH WILL BE MAINTAINED BY PARTIES OTHER THAN JEA (SUCH AS PRIVATE SEWER COLLECTION SYSTEMS, PRIVATE (FORCE MAIN) PUMP OUT BOX AND SYSTEMS NOT MAINTAINED BY JEA), THE COVER SHALL INCLUDE "SANITARY SEWER" GENERIC LETTERING (NO "JEA" LOGO OR NEOPRENE GASKET).

SANITARY SEWER CONCRETE TYPE "A" MANHOLE 8"-21" SEWERS

PLATE S-2, S-3

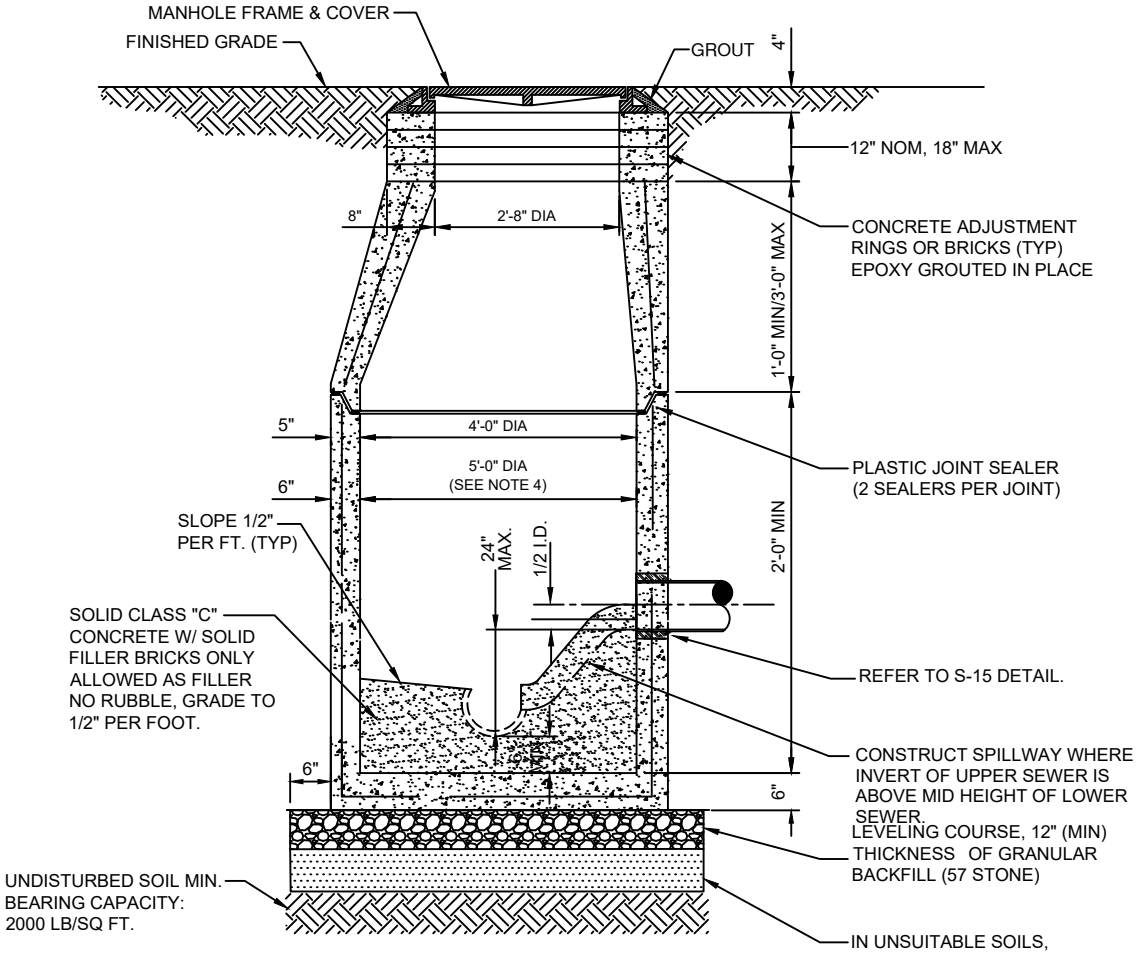

SECTION VIEW (S-2)

(FOR PLAN VIEW SEE S-3)

NOTES:

1. PRECAST MANHOLE SECTIONS TO BE MANUFACTURED IN ACCORDANCE WITH THE LATEST EDITIONS OF A.S.T.M. C-478 WITH 4000 LB. CONC., TYPE II CEMENT. ALL LIFTING HOLES AND OUTSIDE INSERTS SHALL BE FILLED WITH NON-SHRINK GROUT AND COATED WITH BITUMINOUS WATERPROOFING MATERIAL.

2. THE INTERIOR AND EXTERIOR OF MANHOLE AND ADJUSTING RINGS SHALL BE GIVEN TWO COATS OF BITUMINOUS WATERPROOFING MATERIAL.

3. IF SPECIALTY LINER IS TO BE INSTALLED ON INSIDE SURFACE OF MANHOLE, THE BITUMINOUS WATERPROOFING MATERIAL SHALL BE OMITTED ON THE INSIDE.

4. JUNCTION MANHOLE (CLOSEST TO WETWELL) SHALL BE 5' DIA WITH SPECIALTY LINER.

5. ALL MANHOLE JOINTS BELOW THE TOP COVER SECTION SHALL INCLUDE A 6" WIDE (MIN) EXTERIOR JOINT TAPE (WITH PRIMER). TAPE ON THE CONE SECTION IS OPTIONAL. SEE PLATE S-17.

6. IN SILTS, CLAY OR HIGHLY ORGANIC SOILS (FINE-GRAINED SOILS INCLUDING SOIL GROUPS ML, CL, OL, MH, CH, OH AND PT) THE SOILS SHALL BE OVER-EXCAVATED AN ADDITIONAL 24" (AT A MIN.) AND BACKFILLED WITH AASHTO CLASS A-3 SOIL (COMPACTED TO 98%, ASTM D1557) OR OVER-EXCAVATE AN ADDITIONAL 12" (AT A MIN.) AND BACKFILL WITH GRANULAR BACKFILL (57 STONE).

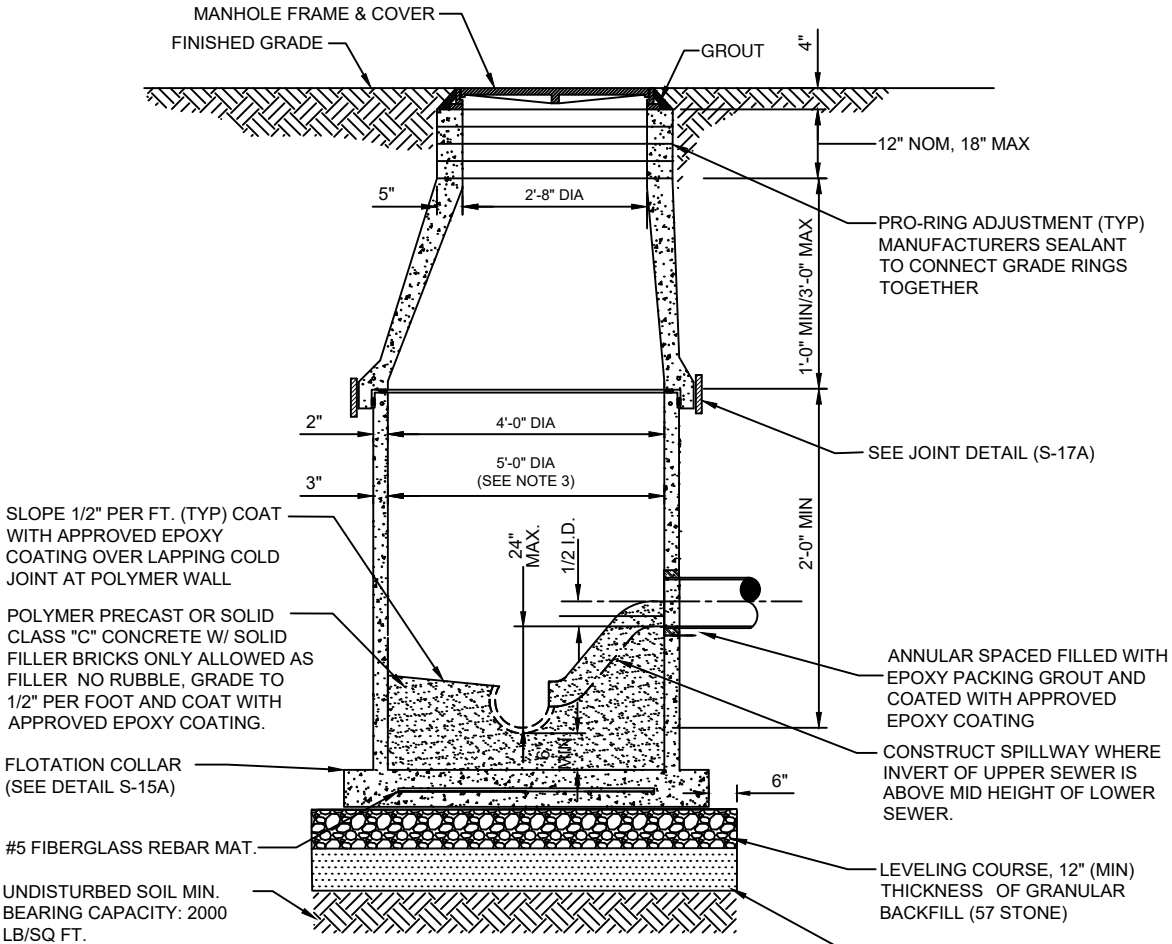

SECTION VIEW (S-2B)

(FOR PLAN VIEW SEE S-3)

NOTES:

1. ALL MANHOLE JOINTS BELOW THE TOP COVER SECTION SHALL INCLUDE A 18" WIDE (MIN) EXTERIOR JOINT TAPE (WITH PRIMER). TAPE ON THE CONE SECTION IS OPTIONAL. SEE PLATE S-17.
2. JUNCTION MANHOLE (CLOSEST TO WETWELL) SHALL BE 5' DIA
3. IN SILTS, CLAY OR HIGHLY ORGANIC SOILS (FINE-GRAINED SOILS INCLUDING SOIL GROUPS ML, CL, OL, MH, CH, OH AND PT) THE SOILS SHALL BE OVER-EXCAVATED AN ADDITIONAL 24" (AT A MIN.) AND BACKFILLED WITH AASHTO CLASS A-3 SOIL (COMPACTED TO 98%, ASTM D1557) OR OVER-EXCAVATE AN ADDITIONAL 12" (AT A MIN.) AND BACKFILL WITH GRANULAR BACKFILL (57 STONE).

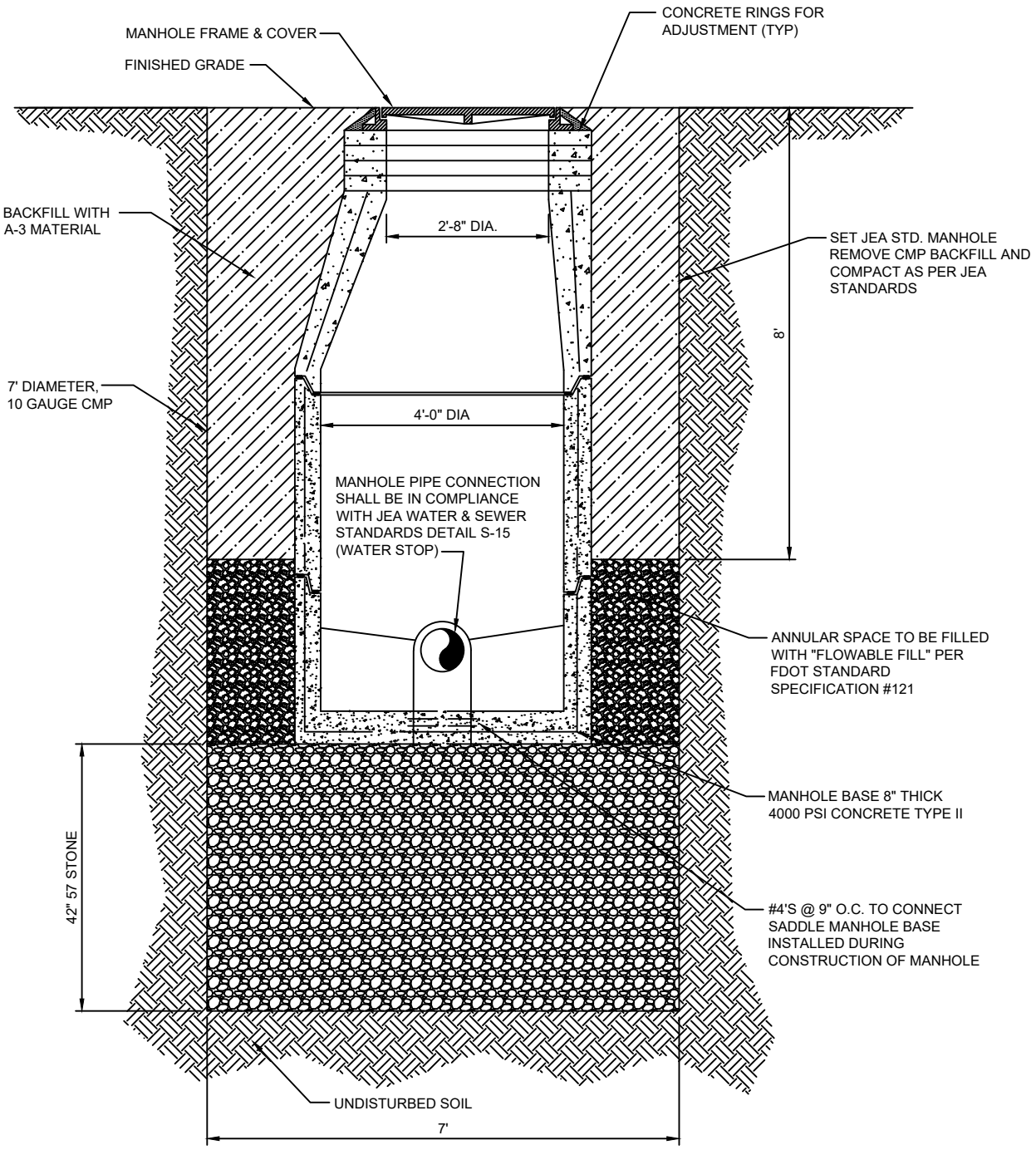

SECTION VIEW

TYPE 'A' MANHOLE PLAN VIEW

PLATE S-3

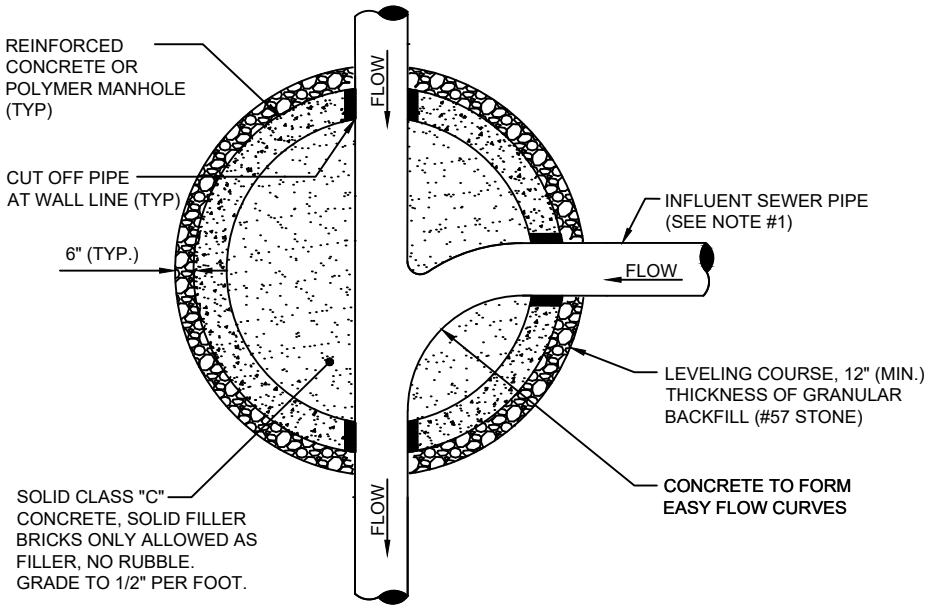

PLAN VIEW (S-3)

(FOR SECTION VIEW SEE S-2, S-2A)

NOTES:

1. THE ANGLE BETWEEN ALL INFLUENT FLOW CHANNELS AND EFFLUENT PIPE SHALL BE BETWEEN 90° - 180° UNLESS OTHERWISE APPROVED BY JEA.

SANITARY SEWER CONCRETE TYPE "B" MANHOLE 8"-10" SEWERS

PLATE S-4, S-5

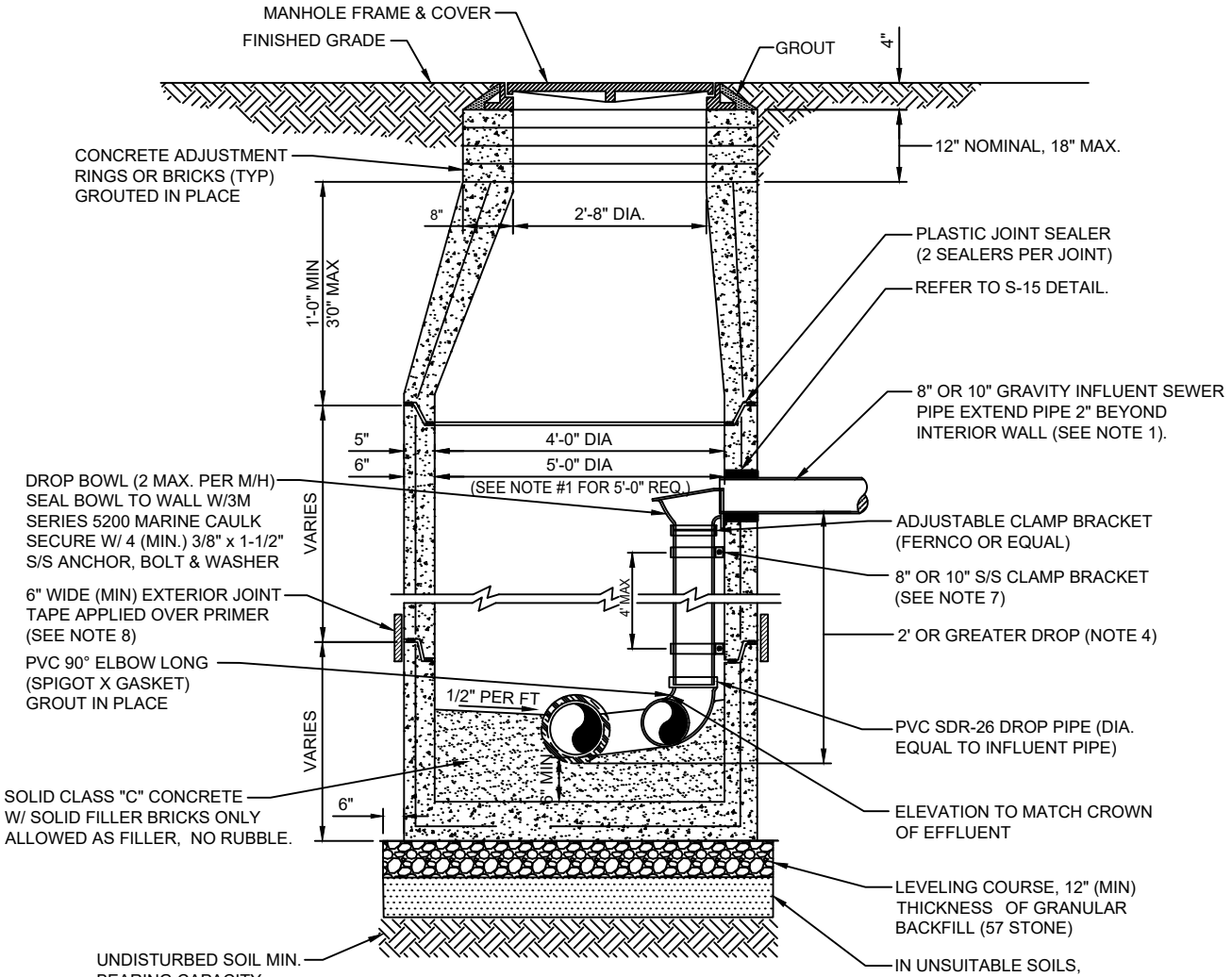

SECTION VIEW (S-4)

(FOR PLAN VIEW SEE S-5)

NOTES:

1. THIS ASSEMBLY IS FOR 8" OR 10" GRAVITY INFLUENT LINES ONLY. NEW CONSTRUCTION ONLY NO FORCE MAINS LARGER THAN 6". MAXIMUM OF 2 INSIDE DROP BOWLS PER MANHOLE. A 5'-0" DIA. MANHOLE (6" THICK WALLS) IS REQUIRED IF TWO INSIDE DROPS ARE CONSTRUCTED WITH ONE OR BOTH BEING 10" SIZE. DROP BOWL BY RELINER OR APPROVED EQUAL REQUIRED. THE INSIDE DROP FOR AN 8" HIGH-LINE SHALL BE CONSTRUCTED SIMILAR TO ABOVE (SEE PLATE S-5).

2. PRECAST MANHOLE SECTIONS TO BE MANUFACTURED IN ACCORDANCE WITH THE LATEST EDITIONS OF A.S.T.M. C-478 WITH 4000 LB. CONC., TYPE II CEMENT. ALL LIFTING HOLES AND OUTSIDE INSERTS SHALL BE FILLED WITH NON-SHRINK GROUT AND COATED WITH BITUMINOUS WATERPROOFING MATERIAL.

3. THE INTERIOR AND EXTERIOR OF MANHOLE AND THE INTERIOR OF ADJUSTMENT RINGS SHALL BE GIVEN TWO COATS OF BITUMINOUS WATERPROOFING MATERIAL.

4. TYPE "B" MANHOLE MUST BE USED FOR 2' OR GREATER INFLUENT PIPE DROPS.

5. THE DROP BOWL ASSEMBLY SHALL BE INSTALLED PRIOR TO APPLICATION OF SPECIALTY LINING MATERIAL.

6. A TYPE "D" MANHOLE SHALL BE UTILIZED WHEN THREE OR MORE (2' OR GREATER) DROPS ARE INVOLVED OR WHEN INFLUENT PIPES AREA LARGER THAN 10" IN SIZE.

7. ADJUSTABLE CLAMPING BRACKET (MIN. 2 PER DROP BOWL ASSY). 1-1/2" WIDE, 11 GA. W/ 3/8" DIA. 18-8 PINCH BOLTS AND NUTS. SECURE TO M/H WALL WITH (2) 3/8" X 1" BOLT, ANCHOR & WASHER PER BRACKET ASSY. ALL 304 OR 316 STAINLESS STEEL MATERIALS.

8. ALL M/H JOINTS BELOW THE TOP CONE SECTION SHALL INCLUDE A 6" WIDE (MIN) EXTERIOR JOINT TAPE (W/PRIMER). TAPE ON THE CONE SECTION IS OPTIONAL.

9. IN SILTS, CLAY OR HIGHLY ORGANIC SOILS (FINE-GRAINED SOILS INCLUDING SOIL GROUPS ML, CL, OL, MH, CH, OH AND PT) THE SOILS SHALL BE OVER-EXCAVATED AN ADDITIONAL 24" (AT A MIN.) AND BACKFILLED WITH AASHTO CLASS A-3 SOIL (COMPACTED TO 98%, ASTM D1557) OR OVER-EXCAVATE AN ADDITIONAL 12" (AT A MIN.) AND BACKFILL WITH GRANULAR BACKFILL (57 STONE).

SANITARY SEWER POLYMER TYPE "B" MANHOLE 8"-10" SEWERS

PLATE S-4A, S-5

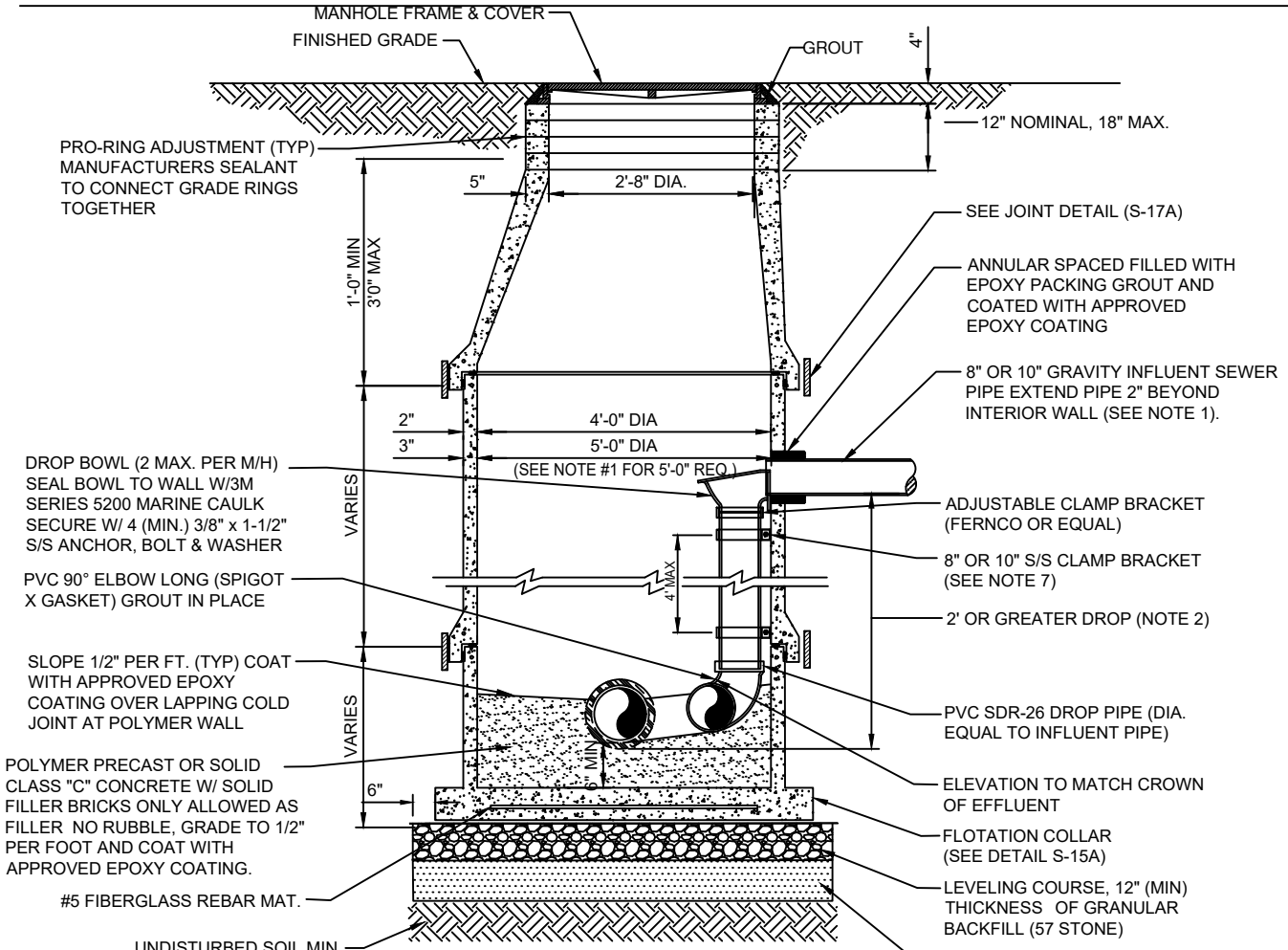

SECTION VIEW (S-4A)

(FOR PLAN VIEW SEE S-5)

NOTES:

1. THIS ASSEMBLY IS FOR 8" OR 10" GRAVITY INFLUENT LINES ONLY. NEW CONSTRUCTION ONLY NO FORCE MAINS LARGER THAN 6". MAXIMUM OF 2 INSIDE DROP BOWLS PER MANHOLE. A 5'-0" DIA. MANHOLE (6" THICK WALLS) IS REQUIRED IF TWO INSIDE DROPS ARE CONSTRUCTED WITH ONE OR BOTH BEING 10" SIZE. DROP BOWL BY RELINER OR APPROVED EQUAL REQUIRED. THE INSIDE DROP FOR AN 8" HIGH-LINE SHALL BE CONSTRUCTED SIMILAR TO ABOVE (SEE PLATE S-5).

2. TYPE "B" MANHOLE MUST BE USED FOR 2' OR GREATER INFLUENT PIPE DROPS.

3. A TYPE "D" MANHOLE SHALL BE UTILIZED WHEN THREE OR MORE (2' OR GREATER) DROPS ARE INVOLVED OR WHEN INFLUENT PIPES AREA LARGER THAN 10" IN SIZE.

4. ADJUSTABLE CLAMPING BRACKET (MIN. 2 PER DROP BOWL ASSY). 1-1/2" WIDE, 11 GA. W/ 3/8" DIA. 18-8 PINCH BOLTS AND NUTS. SECURE TO M/H WALL WITH (2) 3/8" X 1" BOLT, ANCHOR & WASHER PER BRACKET ASSY. ALL 304 OR 316 STAINLESS STEEL MATERIALS.

5. ALL MANHOLE JOINTS BELOW THE TOP COVER SECTION SHALL INCLUDE A 18" WIDE (MIN) EXTERIOR JOINT TAPE (WITH PRIMER). TAPE ON THE CONE SECTION IS OPTIONAL. SEE PLATE S-17.

6. IN SILTS, CLAY OR HIGHLY ORGANIC SOILS (FINE-GRAINED SOILS INCLUDING SOIL GROUPS ML, CL, OL, MH, CH, OH AND PT) THE SOILS SHALL BE OVER-EXCAVATED AN ADDITIONAL 24" (AT A MIN.) AND BACKFILLED WITH AASHTO CLASS A-3 SOIL (COMPACTED TO 98%, ASTM D1557) OR OVER-EXCAVATE AN ADDITIONAL 12" (AT A MIN.) AND BACKFILL WITH GRANULAR BACKFILL (57 STONE).

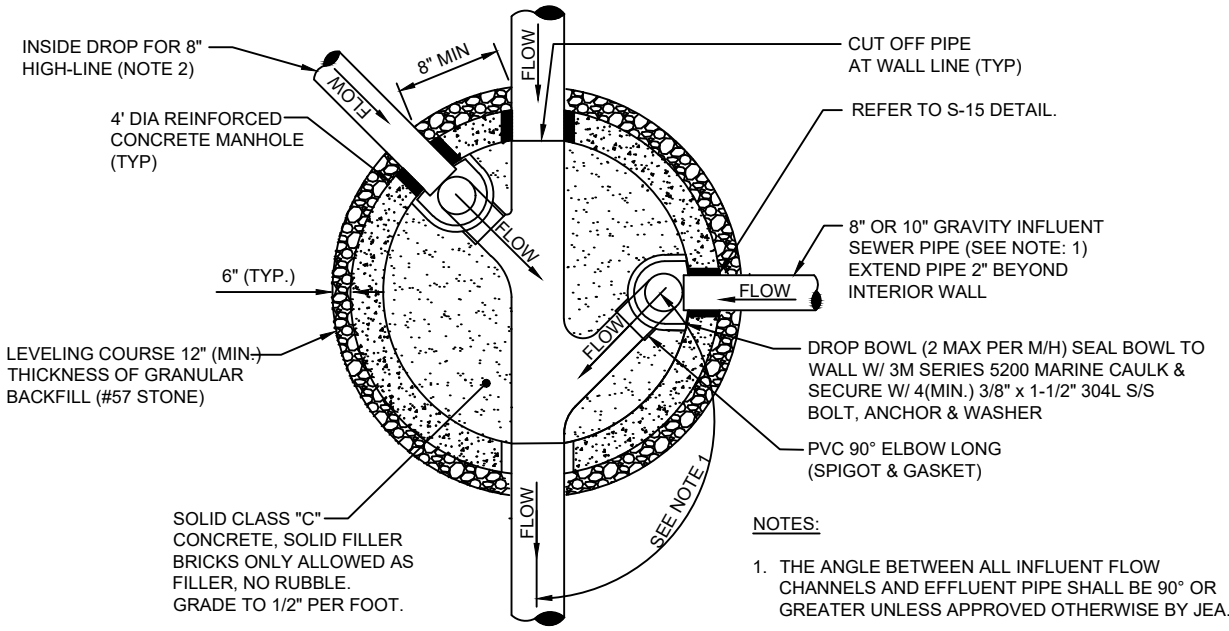

PLAN VIEW (S-5)

(FOR SECTION VIEW SEE S-4)

NOTES:

1. THE ANGLE BETWEEN ALL INFLUENT FLOW CHANNELS AND EFFLUENT PIPE SHALL BE 90° OR GREATER UNLESS APPROVED OTHERWISE BY JEA.
2. THE 8" HIGH-LINE, WHERE UTILIZED, SHALL ENTER THE MANHOLE OFF-CENTER AS SHOWN ABOVE.

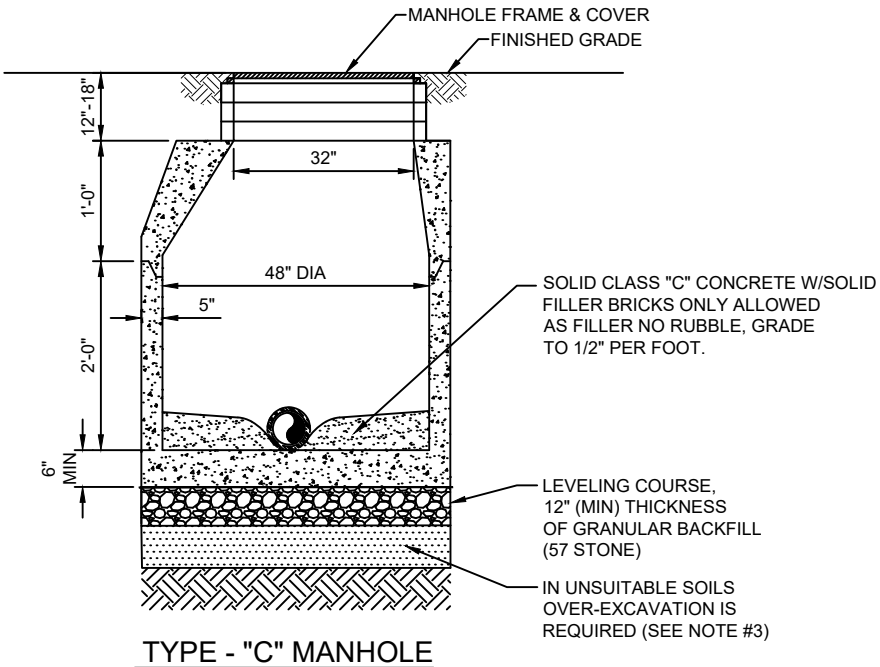

TYPE - "C" MANHOLE

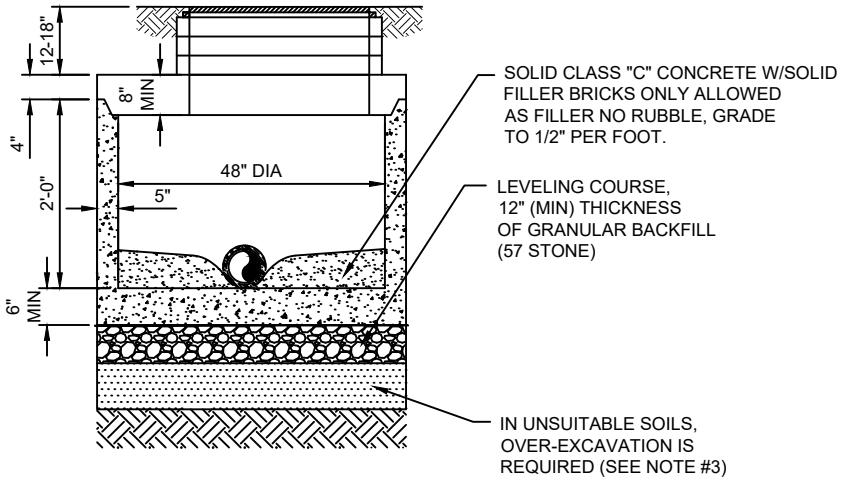

TYPE - "C" MANHOLE WITH FLAT TOP

SECTION VIEWS

NOTES:

1. PRECAST MANHOLE SECTIONS TO BE MANUFACTURED IN ACCORDANCE WITH THE LATEST EDITIONS OF A.S.T.M. C-478WITH 4000 LB. CONC., TYPE II CEMENT. ALL LIFTING HOLES AND OUTSIDE INSERTS SHALL BE FILLED WITH NON-SHRINK GROUT AND COATED WITH BITUMINOUS WATERPROOFING MATERIAL.

2. THE INTERIOR AND EXTERIOR OF MANHOLE AND INTERIOR OF ADJUSTMENT RINGS SHALL BE GIVEN TWO COAT OF BITUMINOUS WATERPROOFING MATERIAL.

3. IN SILTS, CLAY OR HIGHLY ORGANIC SOILS (FINE-GRAINED SOILS INCLUDING SOIL GROUPS ML, CL, OL, MH, CH, OH AND PT) THE SOILS SHALL BE OVER-EXCAVATED AN ADDITIONAL 24" (AT A MIN.) AND BACKFILLED WITH AASHTO CLASS A-3 SOIL (COMPACTED TO 98%, ASTM D1557) OR OVER-EXCAVATE AN ADDITIONAL 12" (AT A MIN.) AND BACKFILL WITH GRANULAR BACKFILL (57 STONE).

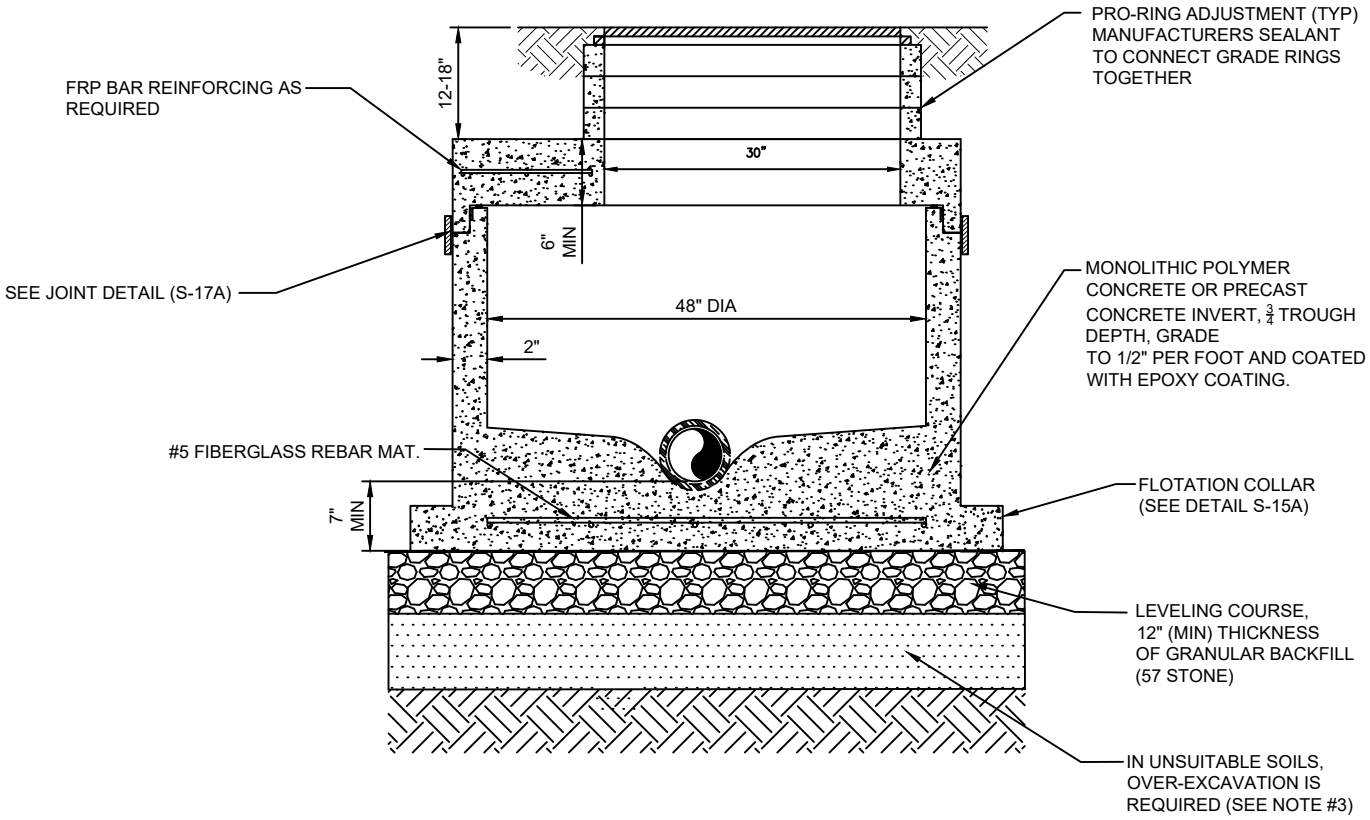

TYPE - "C" MANHOLE WITH FLAT TOP

SECTION VIEWS

NOTES:

1. IN SILTS, CLAY OR HIGHLY ORGANIC SOILS (FINE-GRAINED SOILS INCLUDING SOIL GROUPS ML, CL, OL, MH, CH, OH AND PT) THE SOILS SHALL BE OVER-EXCAVATED AN ADDITIONAL 24" (AT A MIN.) AND BACKFILLED WITH AASHTO CLASS A-3 SOIL (COMPACTED TO 98%, ASTM D1557) OR OVER-EXCAVATE AN ADDITIONAL 12" (AT A MIN.) AND BACKFILL WITH GRANULAR BACKFILL (57 STONE).

SANITARY SEWER CONCRETE TYPE "D" MANHOLE 12"-21" SEWERS

PLATE S-7, S-8

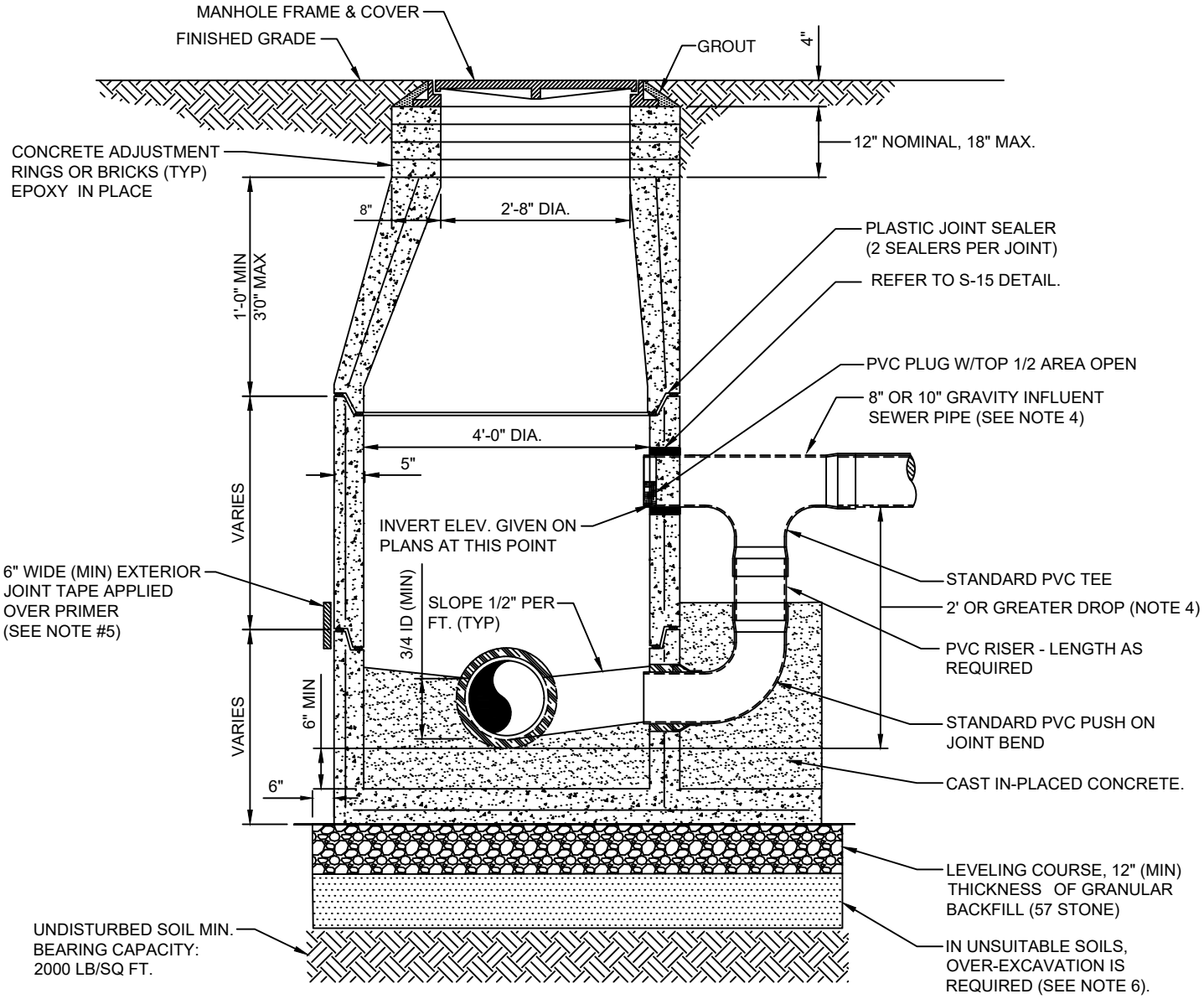

SECTION VIEW (S-7)

(FOR PLAN VIEW SEE S-8)

NOTES:

1. PRECAST MANHOLE SECTIONS TO BE MANUFACTURED IN ACCORDANCE WITH THE LATEST EDITIONS OF A.S.T.M. C-478 WITH 4000 LB. CONC., TYPE II CEMENT. ALL LIFTING HOLES AND OUTSIDE INSERTS SHALL BE FILLED WITH NON-SHRINK GROUT AND COATED WITH BITUMINOUS WATERPROOFING MATERIAL.

2. THE INTERIOR AND EXTERIOR OF MANHOLE AND THE INTERIOR OF THE ADJUSTMENT RINGS SHALL BE GIVEN TWO COATS OF BITUMINOUS WATERPROOFING MATERIAL.

3. IF SPECIALTY LINER IS TO BE INSTALLED ON INSIDE SURFACE OF MANHOLE, THE BITUMINOUS WATERPROOFING SHALL BE, OMITTED ON INSIDE.

4. TYPE "D" MANHOLE SHALL BE USED FOR 10" OR LARGER INFLUENT PIPES W/ 2' OR GREATER INFLUENT DROP.

5. ALL M/H JOINTS BELOW THE TOP CONE SECTION SHALL INCLUDE A 6" WIDE (MIN) EXTERIOR JOINT TAPE (W/PRIMER). TAPE ON THE CONE SECTION IS OPTIONAL.

6. IN SILTS, CLAY OR HIGHLY ORGANIC SOILS (FINE-GRAINED SOILS INCLUDING SOIL GROUPS ML, CL, OL, MH, CH, OH AND PT) THE SOILS SHALL BE OVER-EXCAVATED AN ADDITIONAL 24" (AT A MIN.) AND BACKFILLED WITH AASHTO CLASS A-3 SOIL (COMPACTED TO 98%, ASTM D1557) OR OVER-EXCAVATE AN ADDITIONAL 12" (AT A MIN.) AND BACKFILL WITH GRANULAR BACKFILL (57 STONE).

SANITARY SEWER POLYMER TYPE "D" MANHOLE 12"-21" SEWERS

PLATE S-7A, S-8

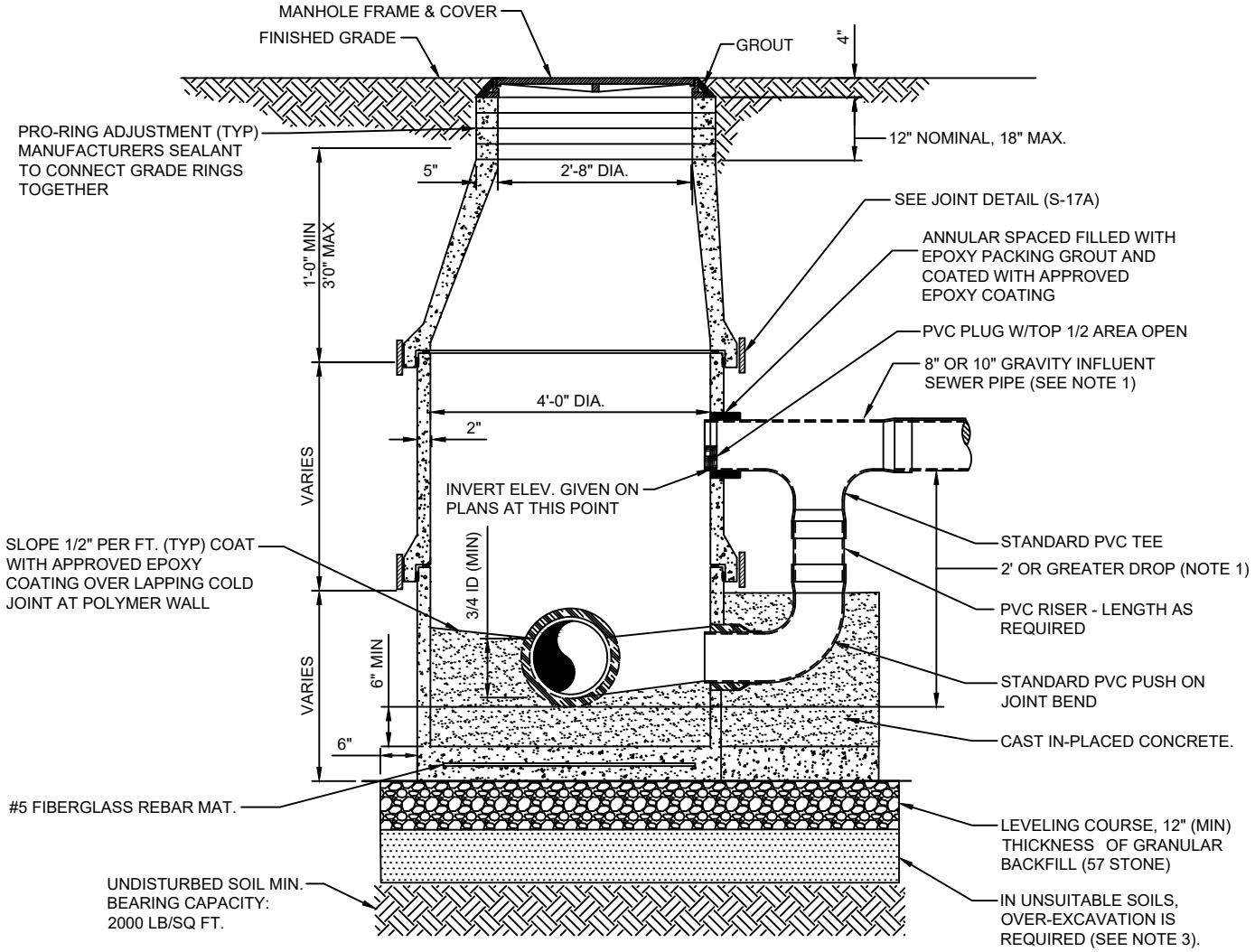

SECTION VIEW (S-7A)

(FOR PLAN VIEW SEE S-8)

NOTES:

1. TYPE "D" MANHOLE SHALL BE USED FOR 10" OR LARGER INFLUENT PIPES W/ 2' OR GREATER INFLUENT DROP.
2. ALL M/H JOINTS BELOW THE TOP CONE SECTION SHALL INCLUDE A 18" WIDE (MIN) EXTERIOR JOINT TAPE (W/PRIMER). TAPE ON THE CONE SECTION IS OPTIONAL.
3. IN SILTS, CLAY OR HIGHLY ORGANIC SOILS (FINE-GRAINED SOILS INCLUDING SOIL GROUPS ML, CL, OL, MH, CH, OH AND PT) THE SOILS SHALL BE OVER-EXCAVATED AN ADDITIONAL 24" (AT A MIN.) AND BACKFILLED WITH AASHTO CLASS A-3 SOIL (COMPACTED TO 98%, ASTM D1557) OR OVER-EXCAVATE AN ADDITIONAL 12" (AT A MIN.) AND BACKFILL WITH GRANULAR BACKFILL (57 STONE).

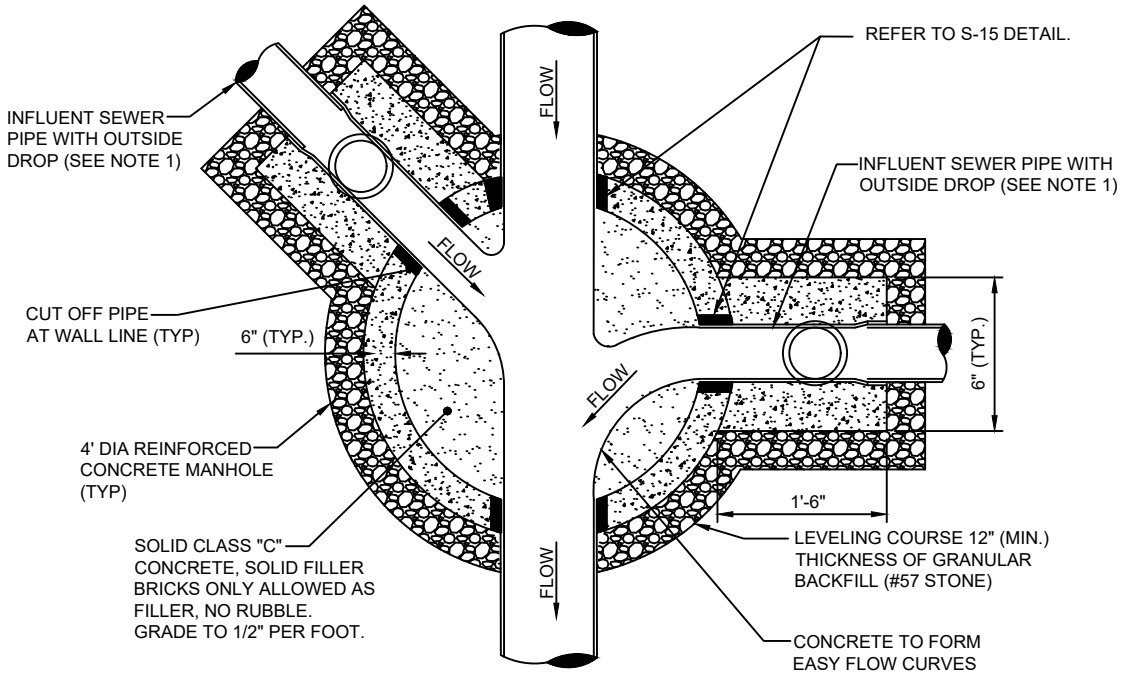

PLAN VIEW (S-8)

(FOR SECTION VIEW SEE S-7)

NOTES:

1. THE ANGLE BETWEEN ALL INFLUENT FLOW CHANNELS AND EFFLUENT PIPE SHALL BE 90° OR GREATER UNLESS APPROVED OTHERWISE BY JEA.
2. THE INTERIOR AND EXTERIOR OF THE MANHOLE AND THE INTERIOR OF THE ADJUSTMENT RINGS SHALL BE GIVEN 2 COATS OF BITUMINOUS WATERPROOFING MATERIAL.
3. IF SPECIALITY LINER IS TO BE INSTALLED ON INSIDE OF MANHOLE, THE BITUMINOUS WATERPROOFING MATERIAL SHALL BE OMITTED ON THE INSIDE.
4. TYPE "D" MANHOLES SHALL BE USED FOR 12" OR LARGER INFLUENT PIPES W/ 2' OR GREATER INFLUENT DROP.

SANITARY SEWER CONCRETE TYPE "E" MANHOLE THRU STORM WATER MANHOLE

PLATE S-9

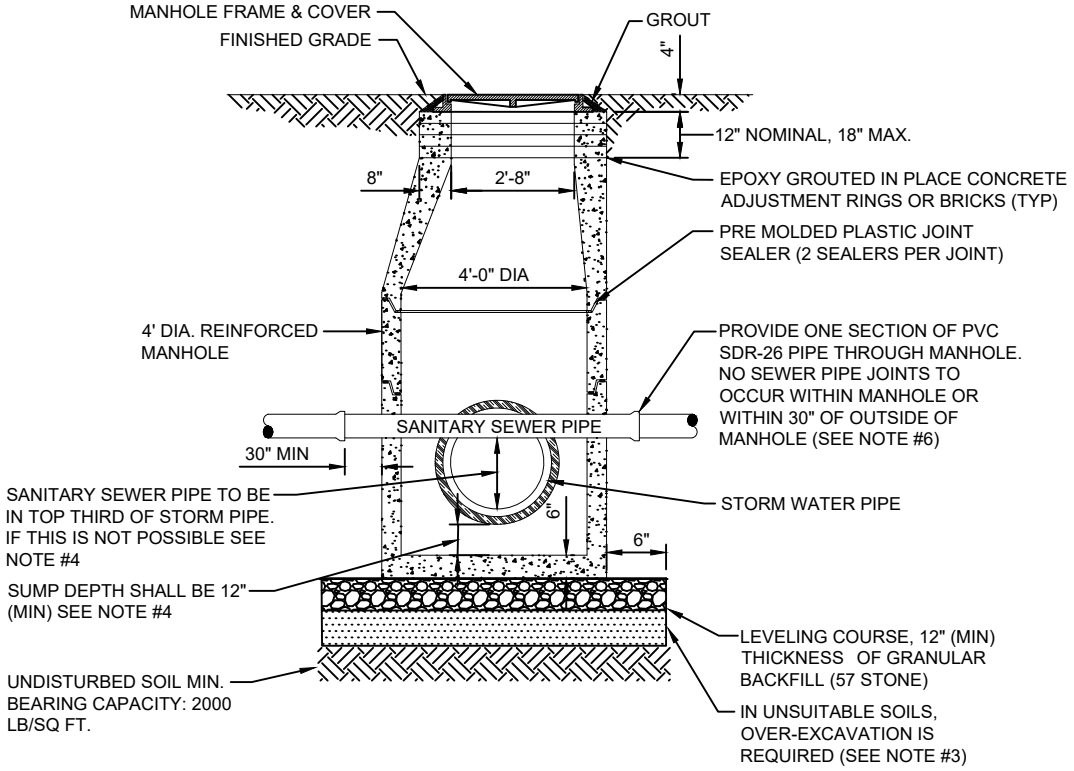

SECTION VIEW
CONFLICT MANHOLE

NOTES:

1. PRECAST MANHOLE SECTIONS TO BE MANUFACTURED IN ACCORDANCE WITH THE LATEST EDITIONS OF A.S.T.M. C-478 WITH 4000 LB. CONC., TYPE II CEMENT. ALL LIFTING HOLES AND OUTSIDE INSERTS SHALL BE FILLED WITH NON-SHRINK GROUT AND COATED WITH BITUMINOUS WATERPROOFING MATERIAL.

2. TYPE "E" MANHOLES ARE TO BE UTILIZED WHERE CONFLICT EXISTS BETWEEN STORM WATER PIPE AND SANITARY SEWER PIPES. THE USE OF THIS STYLE OF MANHOLE SHALL BE MINIMIZED WHERE POSSIBLE.

3. IN SILTS, CLAY OR HIGHLY ORGANIC SOILS (FINE-GRAINED SOILS INCLUDING SOIL GROUPS ML, CL, OL, MH, CH, OH AND PT) THE SOILS SHALL BE OVER-EXCAVATED AN ADDITIONAL 24" (AT A MIN.) AND BACKFILLED WITH AASHTO CLASS A-3 SOIL (COMPACTED TO 98%, ASTM D1557) OR OVER-EXCAVATE AN ADDITIONAL 12" (AT A MIN.) AND BACKFILL WITH GRANULAR BACKFILL (57 STONE).

4. IF THE GRAVITY SEWER PIPE IS LOCATED BELOW THE TOP THIRD OF THE STORM WATER PIPE, THEN THE SUMP DEPTH SHALL BE AS FOLLOWS:
   a) FOR STORM PIPES 36" AND SMALLER, A 24" DEEP SUMP IS REQUIRED.
   b) FOR STORM PIPES LARGER THAN 36", A 36" DEEP SUMP IS REQUIRED.

5. NO WATER MAIN, RECLAIMED WATER MAIN OR SEWER FORCE MAIN SHALL BE ALLOWED TO PENETRATE A STORM WATER STRUCTURE.

6. SPECIAL APPROVAL IS REQUIRED FOR GRAVITY SEWER PIPES 12" AND LARGER AND WILL BE CONSIDERED ON A CASE BY CASE BASIS. IF APPROVED, CONSTRUCTION DETAILS MAY BE REQUIRED.

SANITARY SEWER POLYMER TYPE "E" MANHOLE THRU STORM WATER MANHOLE

PLATE S-9A

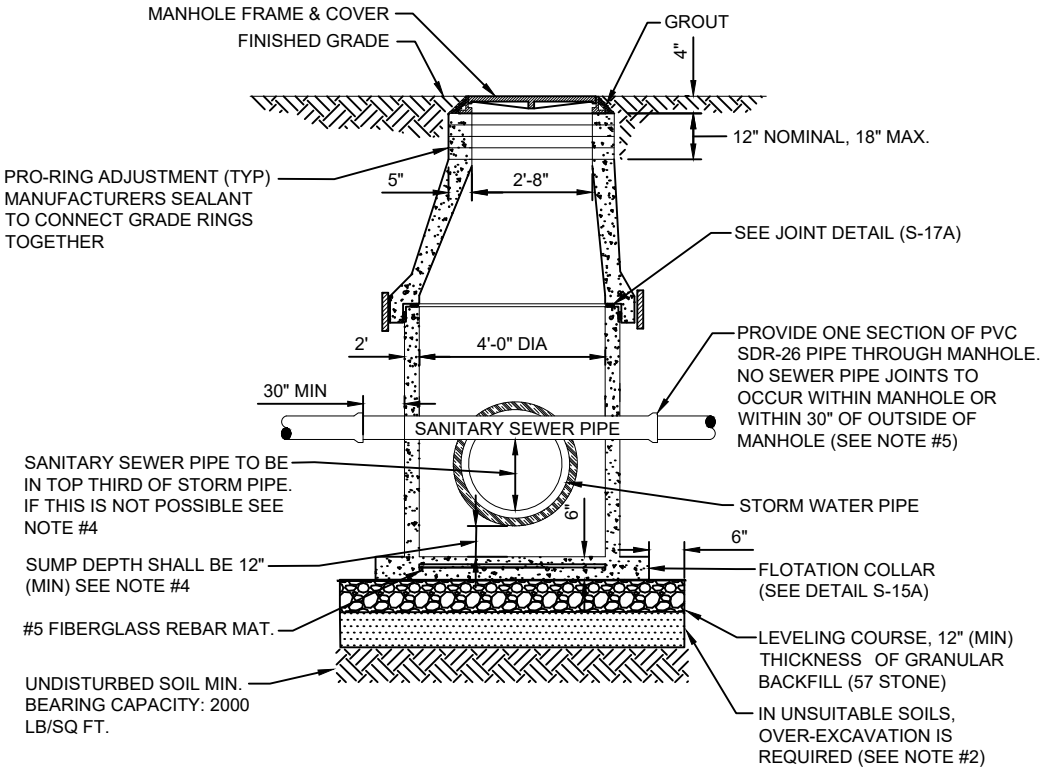

SECTION VIEW
CONFLICT MANHOLE

NOTES:

1. TYPE "E" MANHOLES ARE TO BE UTILIZED WHERE CONFLICT EXISTS BETWEEN STORM WATER PIPE AND SANITARY SEWER PIPES. THE USE OF THIS STYLE OF MANHOLE SHALL BE MINIMIZED WHERE POSSIBLE.

2. IN SILTS, CLAY OR HIGHLY ORGANIC SOILS (FINE-GRAINED SOILS INCLUDING SOIL GROUPS ML, CL, OL, MH, CH, OH AND PT) THE SOILS SHALL BE OVER-EXCAVATED AN ADDITIONAL 24" (AT A MIN.) AND BACKFILLED WITH AASHTO CLASS A-3 SOIL (COMPACTED TO 98%, ASTM D1557) OR OVER-EXCAVATE AN ADDITIONAL 12" (AT A MIN.) AND BACKFILL WITH GRANULAR BACKFILL (57 STONE).

3. IF THE GRAVITY SEWER PIPE IS LOCATED BELOW THE TOP THIRD OF THE STORM WATER PIPE, THEN THE SUMP DEPTH SHALL BE AS FOLLOWS:
   a) FOR STORM PIPES 36" AND SMALLER, A 24" DEEP SUMP IS REQUIRED.
   b) FOR STORM PIPES LARGER THAN 36", A 36" DEEP SUMP IS REQUIRED.

4. NO WATER MAIN, RECLAIMED WATER MAIN OR SEWER FORCE MAIN SHALL BE ALLOWED TO PENETRATE A STORM WATER STRUCTURE.

5. SPECIAL APPROVAL IS REQUIRED FOR GRAVITY SEWER PIPES 12" AND LARGER AND WILL BE CONSIDERED ON A CASE BY CASE BASIS. IF APPROVED, CONSTRUCTION DETAILS MAY BE REQUIRED.

SANITARY SEWER CONCRETE TYPE "F" MANHOLE 12" - 21" SEWERS

PLATE S-10

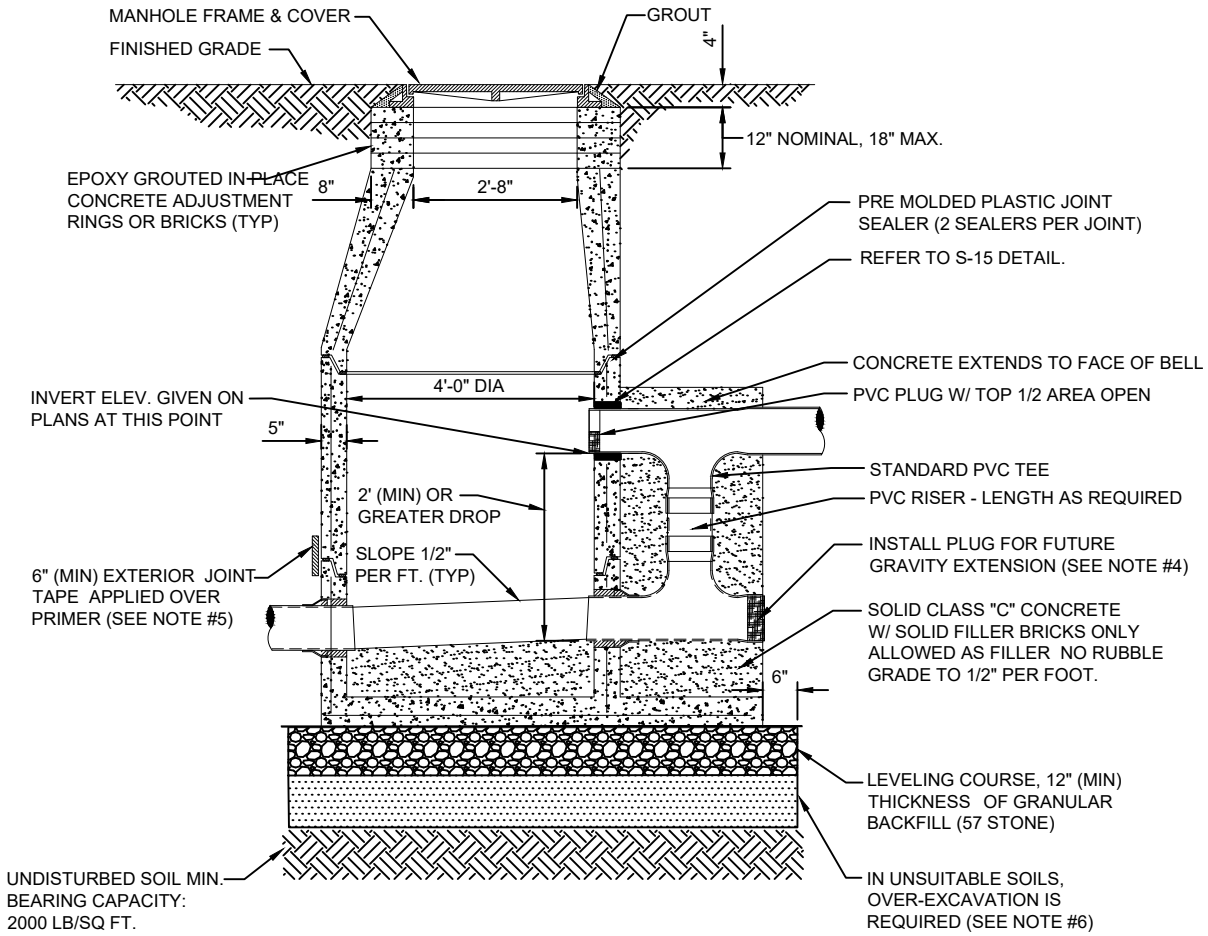

SECTION VIEW

NOTES:

1. PRECAST MANHOLE SECTIONS TO BE MANUFACTURED IN ACCORDANCE WITH THE LATEST EDITIONS OF A.S.T.M. C-478 WITH 4000 LB. CONC., TYPE II CEMENT. ALL LIFTING HOLES AND OUTSIDE INSERTS SHALL BE FILLED WITH NON-SHRINK GROUT AND COATED WITH BITUMINOUS WATERPROOFING MATERIAL.
2. THE INTERIOR AND EXTERIOR OF MANHOLE AND THE INTERIOR OF THE ADJUSTMENT RINGS SHALL BE GIVEN TWO COATS OF BITUMINOUS WATERPROOFING MATERIAL.
3. IF SPECIALTY LINER IS TO BE INSTALLED ON INSIDE SURFACE OF MANHOLE, THE BITUMINOUS WATERPROOFING SHALL BE OMITTED ON INSIDE.
4. TYPE "F" MANHOLE SHALL BE USED FOR 12" OR LARGER INFLUENT PIPES W/ 2' OR GREATER INFLUENT DROP THIS MANHOLE IS TO BE USED WHERE THE INFLUENT GRAVITY LINE IS TO BE EXTENDED IN THE FUTURE (SEE DETAIL).
5. ALL M/H JOINTS BELOW THE TOP CONE SECTION SHALL INCLUDE A 6" WIDE (MIN) EXTERIOR JOINT TAPE (W/PRIMER). TAPE ON THE CONE SECTION IS OPTIONAL.
6. IN SILTS, CLAY OR HIGHLY ORGANIC SOILS (FINE-GRAINED SOILS INCLUDING SOIL GROUPS ML, CL, OL, MH, CH, OH AND PT) THE SOILS SHALL BE OVER-EXCAVATED AN ADDITIONAL 24" (AT A MIN.) AND BACKFILLED WITH AASHTO CLASS A-3 SOIL (COMPACTED TO 98%, ASTM D1557) OR OVER-EXCAVATE AN ADDITIONAL 12" (AT A MIN.) AND BACKFILL WITH GRANULAR BACKFILL (57 STONE).

SANITARY SEWER POLYMER TYPE "F" MANHOLE 12"-21" SEWERS

PLATE S-10A

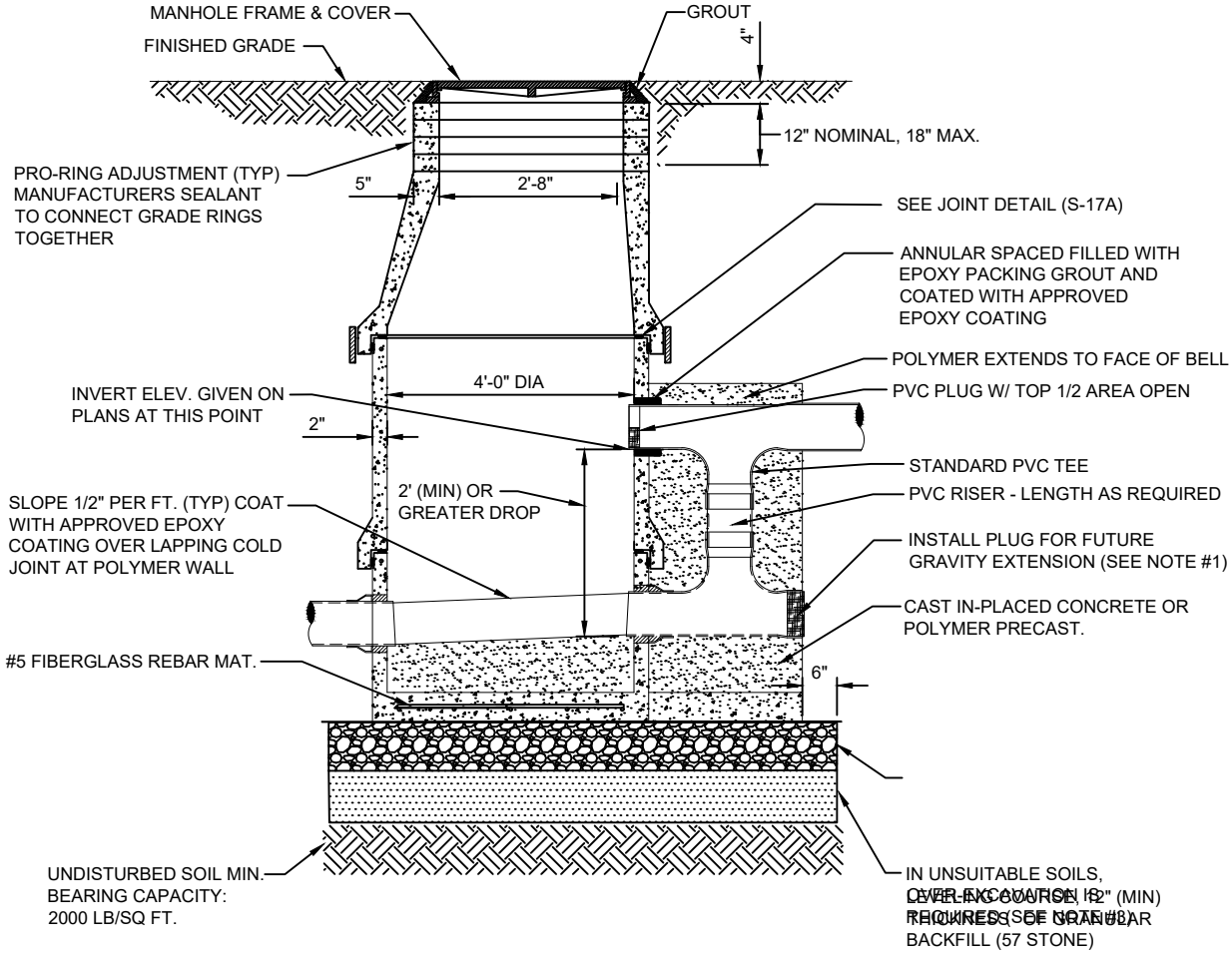

SECTION VIEW

NOTES:

1. TYPE "F" MANHOLE SHALL BE USED FOR 12" OR LARGER INFLUENT PIPES W/ 2' OR GREATER INFLUENT DROP THIS MANHOLE IS TO BE USED WHERE THE INFLUENT GRAVITY LINE IS TO BE EXTENDED IN THE FUTURE (SEE DETAIL).
2. ALL M/H JOINTS BELOW THE TOP CONE SECTION SHALL INCLUDE A 18" WIDE (MIN) EXTERIOR JOINT TAPE (W/PRIMER). TAPE ON THE CONE SECTION IS OPTIONAL.
3. IN SILTS, CLAY OR HIGHLY ORGANIC SOILS (FINE-GRAINED SOILS INCLUDING SOIL GROUPS ML, CL, OL, MH, CH, OH AND PT) THE SOILS SHALL BE OVER-EXCAVATED AN ADDITIONAL 24" (AT A MIN.) AND BACKFILLED WITH AASHTO CLASS A-3 SOIL (COMPACTED TO 98%, ASTM D1557) OR OVER-EXCAVATE AN ADDITIONAL 12" (AT A MIN.) AND BACKFILL WITH GRANULAR BACKFILL (57 STONE).

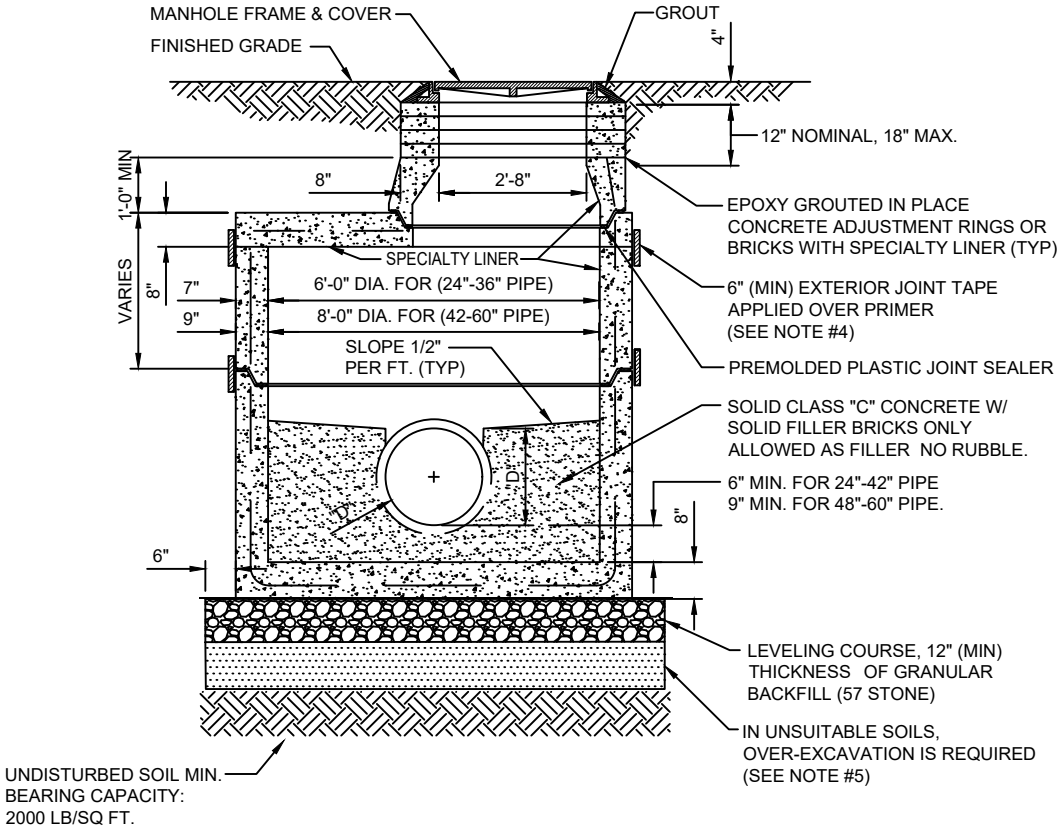

SECTION VIEW

NOTES:

1. PRECAST MANHOLE SECTIONS TO BE MANUFACTURED IN ACCORDANCE WITH THE LATEST EDITIONS OF A.S.T.M. C-478 WITH 4000 LB. CONC., TYPE II CEMENT. ALL LIFTING HOLES AND OUTSIDE INSERTS SHALL BE FILLED WITH NON-SHRINK GROUT AND COATED WITH BITUMINOUS WATERPROOFING MATERIAL.

2. THE EXTERIOR ONLY OF MANHOLE SHALL BE GIVEN TWO COATS OF BITUMINOUS WATERPROOFING MATERIAL.

3. SPECIALTY LINER IS TO BE INSTALLED ON INSIDE SURFACE OF MANHOLE IN ACCORDANCE WITH AS-602, THEREFORE, THE BITUMINOUS WATERPROOFING SHALL BE OMITTED ON INSIDE.

4. ALL M/H JOINTS BELOW THE TOP CONE SECTION SHALL INCLUDE A 6" WIDE (MIN) EXTERIOR JOINT TAPE (W/PRIMER). TAPE ON THE CONE SECTION IS OPTIONAL.

5. IN SILTS, CLAY OR HIGHLY ORGANIC SOILS (FINE-GRAINED SOILS INCLUDING SOIL GROUPS ML, CL, OL, MH, CH, OH AND PT) THE SOILS SHALL BE OVER-EXCAVATED AN ADDITIONAL 24" (AT A MIN.) AND BACKFILLED WITH AASHTO CLASS A-3 SOIL (COMPACTED TO 98%, ASTM D1557) OR OVER-EXCAVATE AN ADDITIONAL 12" (AT A MIN.) AND BACKFILL WITH GRANULAR BACKFILL (57 STONE).

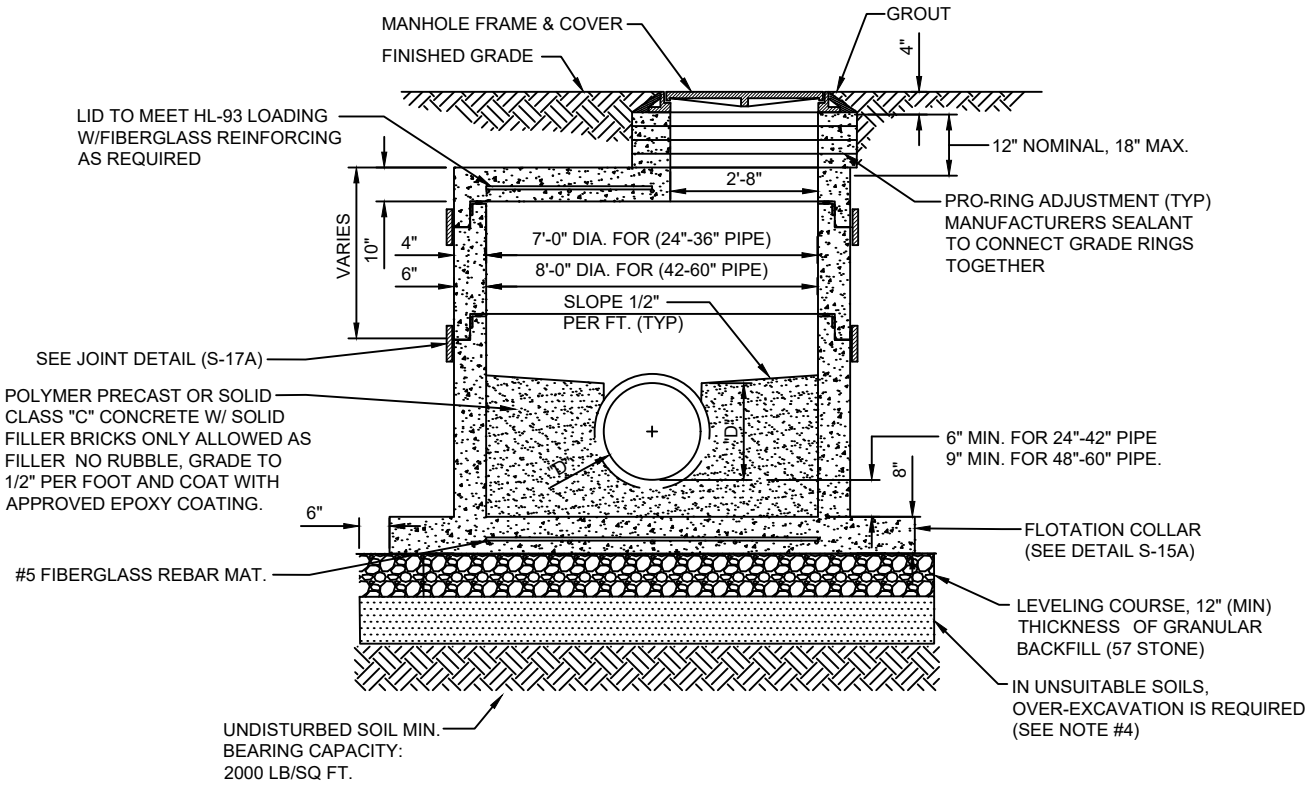

SECTION VIEW

NOTES:

1. ALL M/H JOINTS BELOW THE TOP CONE SECTION SHALL INCLUDE A 18" WIDE (MIN) EXTERIOR JOINT TAPE (W/PRIMER). TAPE ON THE CONE SECTION IS OPTIONAL.
2. IN SILTS, CLAY OR HIGHLY ORGANIC SOILS (FINE-GRAINED SOILS INCLUDING SOIL GROUPS ML, CL, OL, MH, CH, OH AND PT) THE SOILS SHALL BE OVER-EXCAVATED AN ADDITIONAL 24" (AT A MIN.) AND BACKFILLED WITH AASHTO CLASS A-3 SOIL (COMPACTED TO 98%, ASTM D1557) OR OVER-EXCAVATE AN ADDITIONAL 12" (AT A MIN.) AND BACKFILL WITH GRANULAR BACKFILL (57 STONE).

SANITARY SEWER CONCRETE TYPE "H" MANHOLE 24" - 60" SEWERS

PLATE S-12

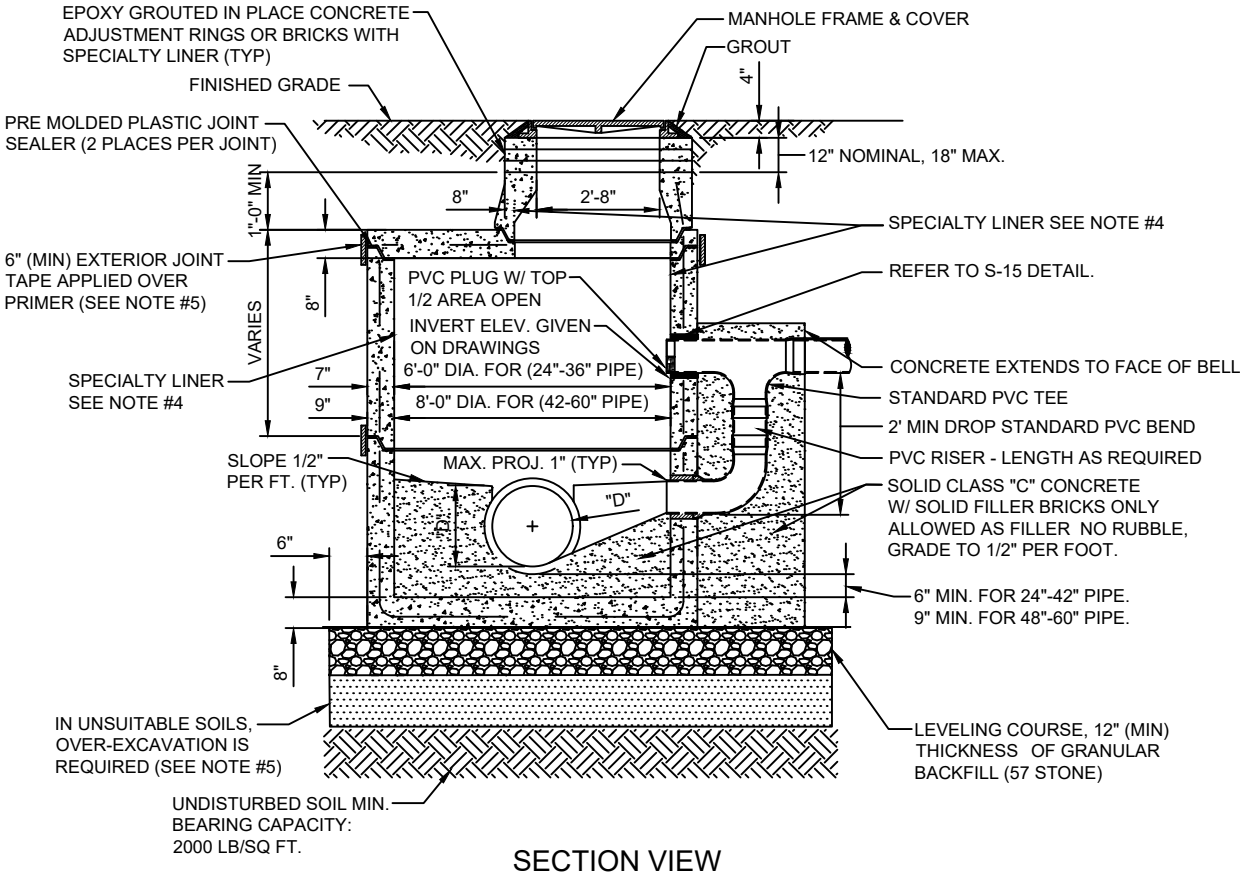

SECTION VIEW

NOTES:

1. PRECAST MANHOLE SECTIONS TO BE MANUFACTURED IN ACCORDANCE WITH THE LATEST EDITIONS OF A.S.T.M. C-478 WITH 4000 LB. CONC., TYPE II CEMENT. ALL LIFTING HOLES AND OUTSIDE INSERTS SHALL BE FILLED WITH NON-SHRINK GROUT AND COATED WITH BITUMINOUS WATERPROOFING MATERIAL.
2. THE EXTERIOR OF MANHOLE SHALL BE GIVEN TWO COATS OF BITUMINOUS WATERPROOFING MATERIAL.
3. OUTSIDE DROPS REQUIRED IF DROPS ARE 2' OR GREATER.
4. SPECIALTY LINER IS TO BE INSTALLED ON INSIDE SURFACE OF MANHOLE IN ACCORDANCE WITH AS-602, THEREFORE, THE BITUMINOUS WATERPROOFING SHALL BE OMITTED ON INSIDE. SEE SPECIFICATIONS FOR APPROVED SPECIALTY LINERS.
5. ALL M/H JOINTS BELOW THE TOP CONE SECTION SHALL INCLUDE A 6" WIDE (MIN) EXTERIOR JOINT TAPE (W/PRIMER). TAPE ON THE CONE SECTION IS OPTIONAL.
6. IN SILTS, CLAY OR HIGHLY ORGANIC SOILS (FINE-GRAINED SOILS INCLUDING SOIL GROUPS ML, CL, OL, MH, CH, OH AND PT) THE SOILS SHALL BE OVER-EXCAVATED AN ADDITIONAL 24" (AT A MIN.) AND BACKFILLED WITH AASHTO CLASS A-3 SOIL (COMPACTED TO 98%, ASTM D1557) OR OVER-EXCAVATE AN ADDITIONAL 12" (AT A MIN.) AND BACKFILL WITH GRANULAR BACKFILL (57 STONE).

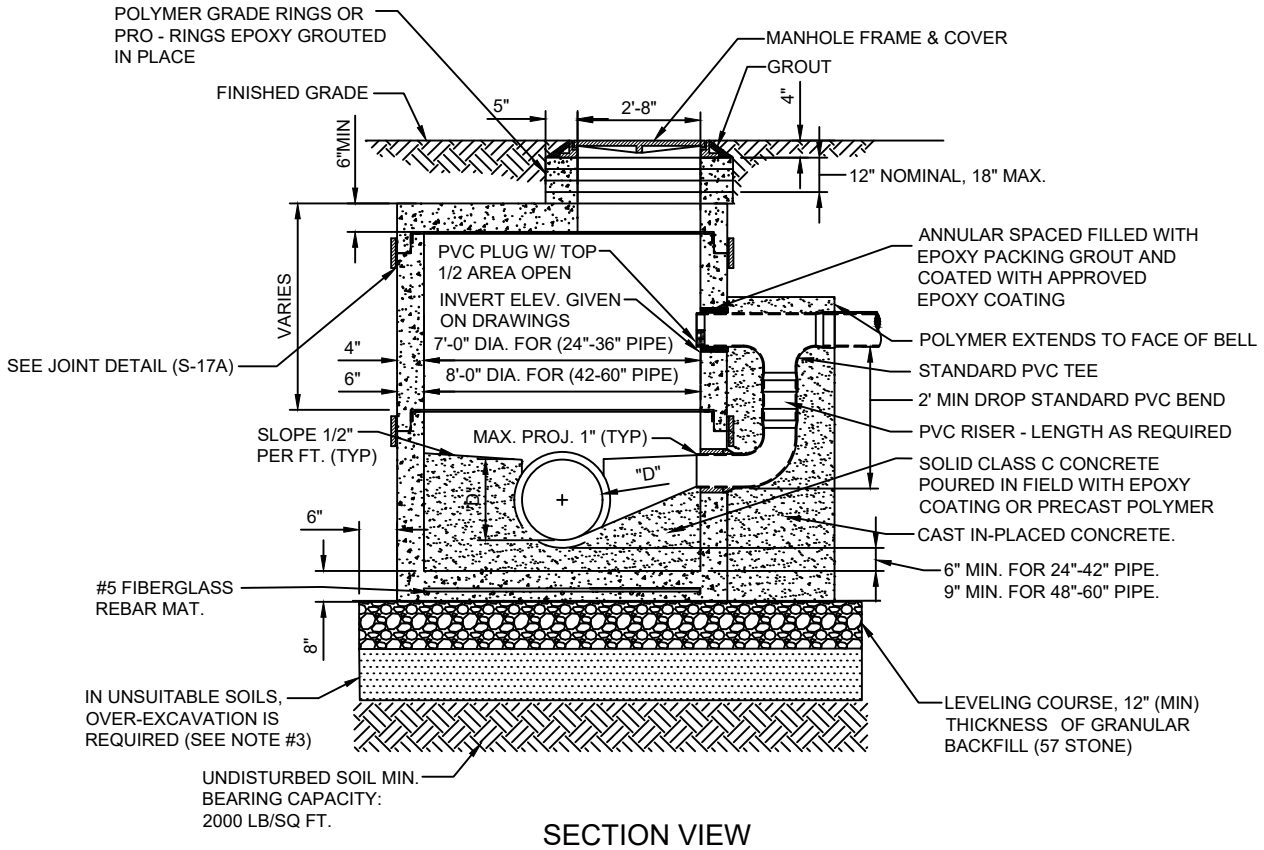

SECTION VIEW

NOTES:

1. OUTSIDE DROPS REQUIRED IF DROPS ARE 2' OR GREATER.
2. ALL M/H JOINTS BELOW THE TOP CONE SECTION SHALL INCLUDE A 18" WIDE (MIN) EXTERIOR JOINT TAPE (W/PRIMER). TAPE ON THE CONE SECTION IS OPTIONAL.
3. IN SILTS, CLAY OR HIGHLY ORGANIC SOILS (FINE-GRAINED SOILS INCLUDING SOIL GROUPS ML, CL, OL, MH, CH, OH AND PT) THE SOILS SHALL BE OVER-EXCAVATED AN ADDITIONAL 24" (AT A MIN.) AND BACKFILLED WITH AASHTO CLASS A-3 SOIL (COMPACTED TO 98%, ASTM D1557) OR OVER-EXCAVATE AN ADDITIONAL 12" (AT A MIN.) AND BACKFILL WITH GRANULAR BACKFILL (57 STONE).

SANITARY SEWER CONCRETE TYPE "I" MANHOLE 24" - 60" SEWERS

PLATE S-13

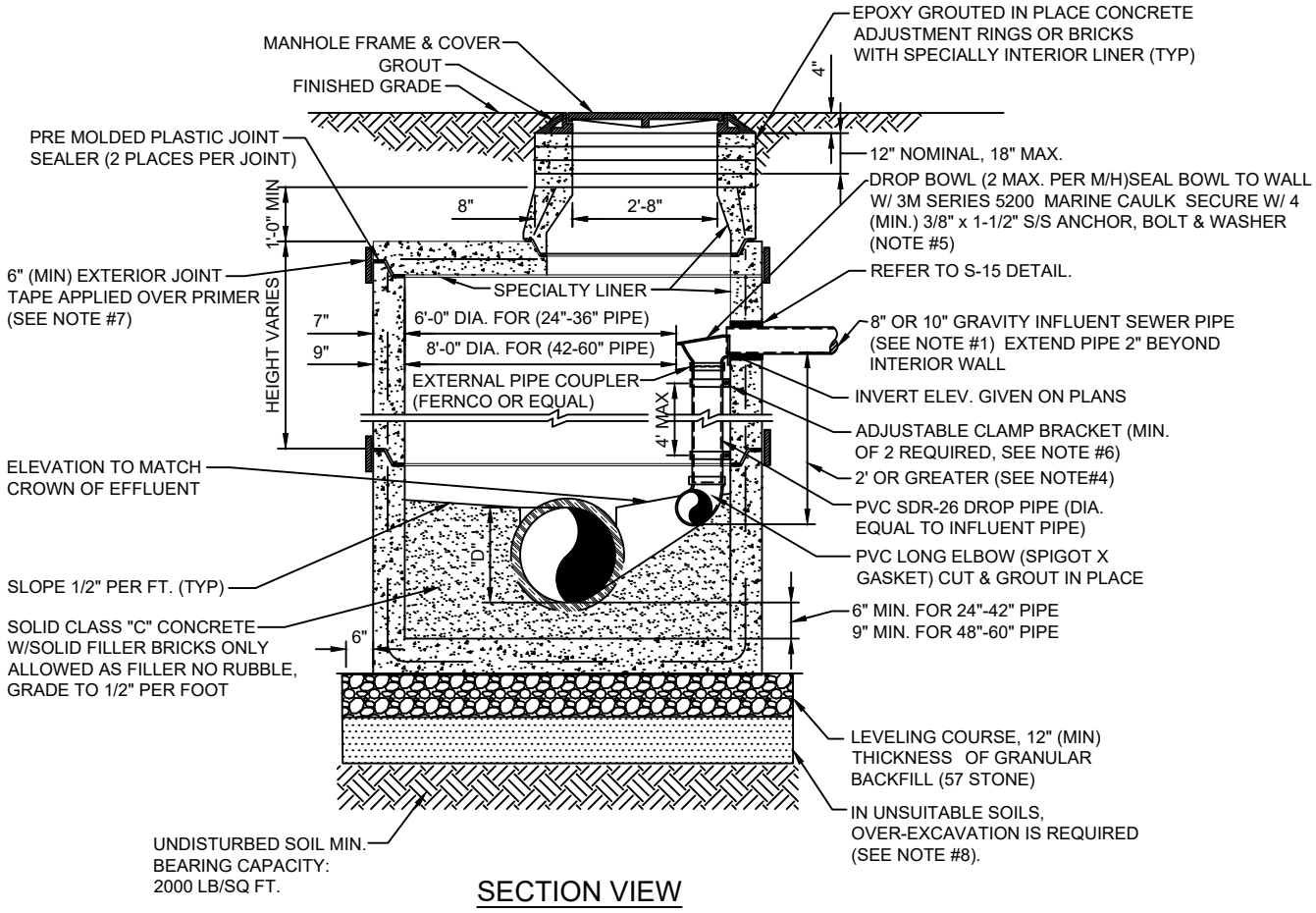

SECTION VIEW

NOTES:

1. THIS ASSEMBLY IS FOR 8" OR 10" GRAVITY INFLUENT LINES ONLY. NO DROPS ALLOWED FOR FORCE MAINS. DROP BOWL BY RELINER OR APPROVED EQUAL REQUIRED.
2. PRECAST MANHOLE SECTIONS TO BE MANUFACTURED IN ACCORDANCE WITH THE LATEST EDITIONS OF A.S.T.M. C-478 WITH 4000 LB. CONC., TYPE II CEMENT. ALL LIFTING HOLES AND OUTSIDE INSERTS SHALL BE FILLED WITH NON-SHRINK GROUT AND COATED WITH BITUMINOUS WATERPROOFING MATERIAL.
3. THE EXTERIOR OF THE MANHOLE AND INTERIOR OF ADJUSTMENT RINGS SHALL BE GIVEN TWO COATS OF BITUMINOUS WATERPROOFING MATERIAL.
4. THIS DETAIL FOR 2' OR GREATER ELEVATIONS DIFFERENCE BETWEEN INVERT OF INCOMING PIPE AND ELBOW OUTLET.
5. THE DROP BOWL ASSEMBLY SHALL BE INSTALLED PRIOR TO APPLICATION OF SPECIALTY LINING MATERIAL IN ACCORDANCE WITH AS-602, THEREFORE, BITUMINOUS WATERPROOFING MATERIAL SHALL BE OMITTED FROM THE INSIDE OF MANHOLE. SEE SPECIFICATIONS FOR THE INSTALLATION OF SPECIALTY LINING MATERIAL SECTION 446.
6. ADJUSTABLE CLAMPING BRACKET (MIN. 2 PER DROP BOWL ASSY). 1-1/2" WIDE, 11 GA. W/ 3/8" DIA. 18-8 PINCH BOLTS AND NUTS. SECURE TO M/H WALL WITH (2) 3/8" X 1" BOLT, ANCHOR & WASHER PER BRACKET ASSY. ALL 304 OR 316 STAINLESS STEEL MATERIALS.
7. ALL M/H JOINTS BELOW THE TOP CONE SECTION SHALL INCLUDE A 6" WIDE (MIN) EXTERIOR JOINT TAPE (W/PRIMER). TAPE ON THE CONE SECTION IS OPTIONAL.
8. IN SILTS, CLAY OR HIGHLY ORGANIC SOILS (FINE-GRAINED SOILS INCLUDING SOIL GROUPS ML, CL, OL, MH, CH, OH AND PT) THE SOILS SHALL BE OVER-EXCAVATED AN ADDITIONAL 24" (AT A MIN.) AND BACKFILLED WITH AASHTO CLASS A-3 SOIL (COMPACTED TO 98%, ASTM D1557) OR OVER-EXCAVATE AN ADDITIONAL 12" (AT A MIN.) AND BACKFILL WITH GRANULAR BACKFILL (57 STONE).

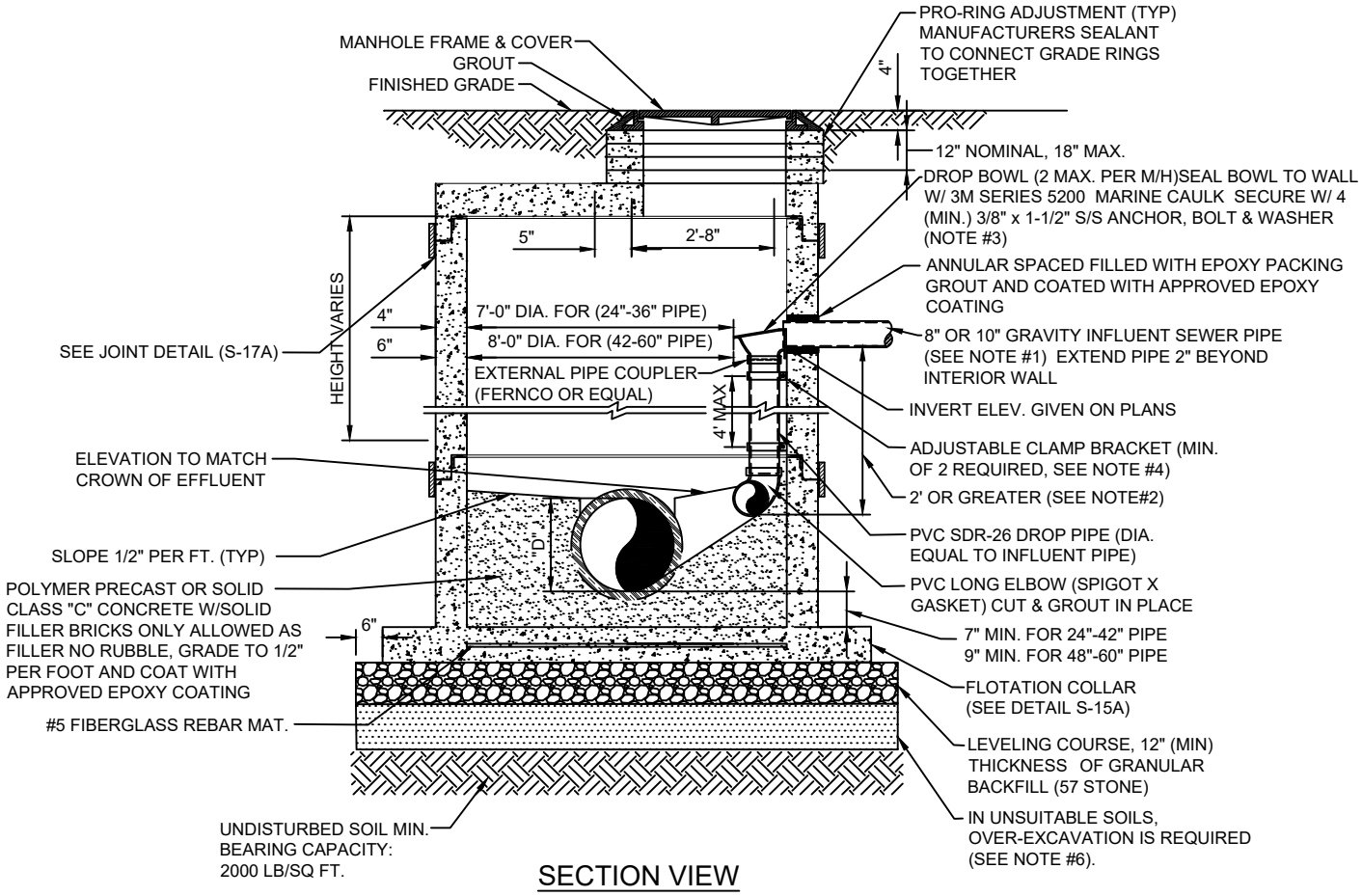

SECTION VIEW

NOTES:

1. THIS ASSEMBLY IS FOR 8" OR 10" GRAVITY INFLUENT LINES ONLY. NO DROPS ALLOWED FOR FORCE MAINS. DROP BOWL BY RELINER OR APPROVED EQUAL REQUIRED.
2. THIS DETAIL FOR 2' OR GREATER ELEVATIONS DIFFERENCE BETWEEN INVERT OF INCOMING PIPE AND ELBOW OUTLET.
3. ADJUSTABLE CLAMPING BRACKET (MIN. 2 PER DROP BOWL ASSY). 1-1/2" WIDE, 11 GA. W/ 3/8" DIA. 18-8 PINCH BOLTS AND NUTS. SECURE TO M/H WALL WITH (2) 3/8" X 1" BOLT, ANCHOR & WASHER PER BRACKET ASSY. ALL 304 OR 316 STAINLESS STEEL MATERIALS.
4. ALL M/H JOINTS BELOW THE TOP CONE SECTION SHALL INCLUDE A 18" WIDE (MIN) EXTERIOR JOINT TAPE (W/PRIMER). TAPE ON THE CONE SECTION IS OPTIONAL.
5. IN SILTS, CLAY OR HIGHLY ORGANIC SOILS (FINE-GRAINED SOILS INCLUDING SOIL GROUPS ML, CL, OL, MH, CH, OH AND PT) THE SOILS SHALL BE OVER-EXCAVATED AN ADDITIONAL 24" (AT A MIN.) AND BACKFILLED WITH AASHTO CLASS A-3 SOIL (COMPACTED TO 98%, ASTM D1557) OR OVER-EXCAVATE AN ADDITIONAL 12" (AT A MIN.) AND BACKFILL WITH GRANULAR BACKFILL (57 STONE).

FIBERGLASS MANHOLE

PLATE S-14

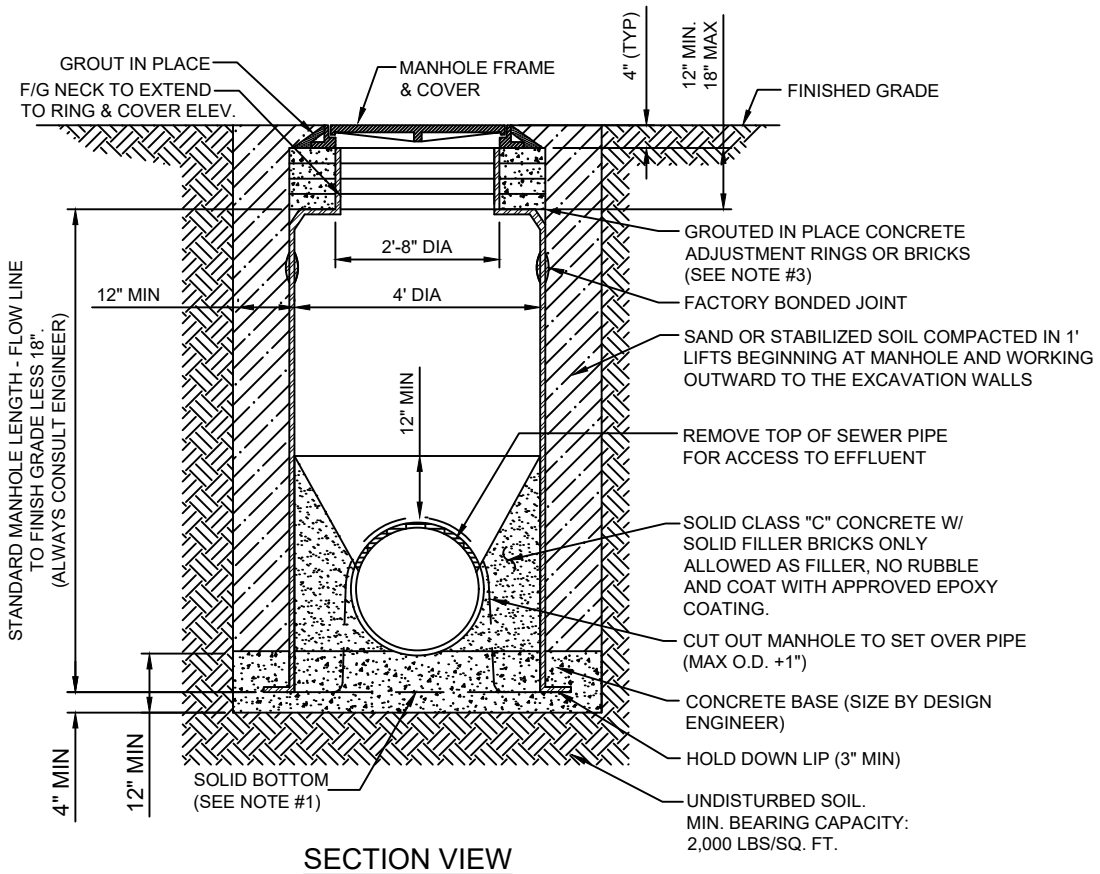

SECTION VIEW

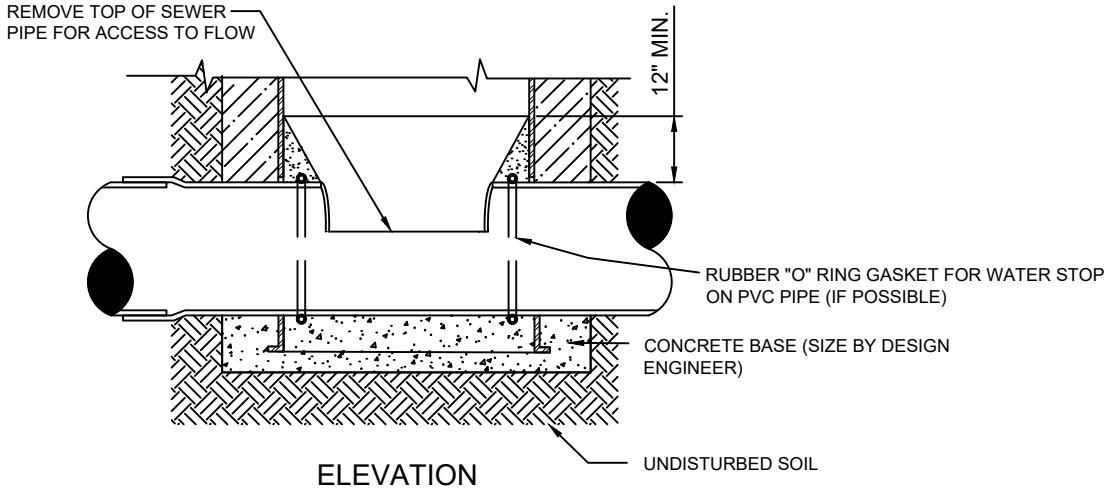

ELEVATION
(FOR SADDLE MANHOLE)

NOTES:

1. A STANDARD TYPE "A" MANHOLE SHALL INCLUDE A SOLID BOTTOM WITH 3" HOLD DOWN FLANGE.
2. CONCRETE BASE TO BE SIZE BY ENGINEER. THE MINIMUM SIZE IS SHOWN ABOVE.
3. IF EXPOSED, THE INTERIOR OF CONCRETE ADJUSTING RINGS WILL BE GIVEN 2 COATS OF BITUMINOUS WATERPROOFING MATERIAL.

POLYMER "DOG HOUSE" MANHOLE

PLATE S-14A

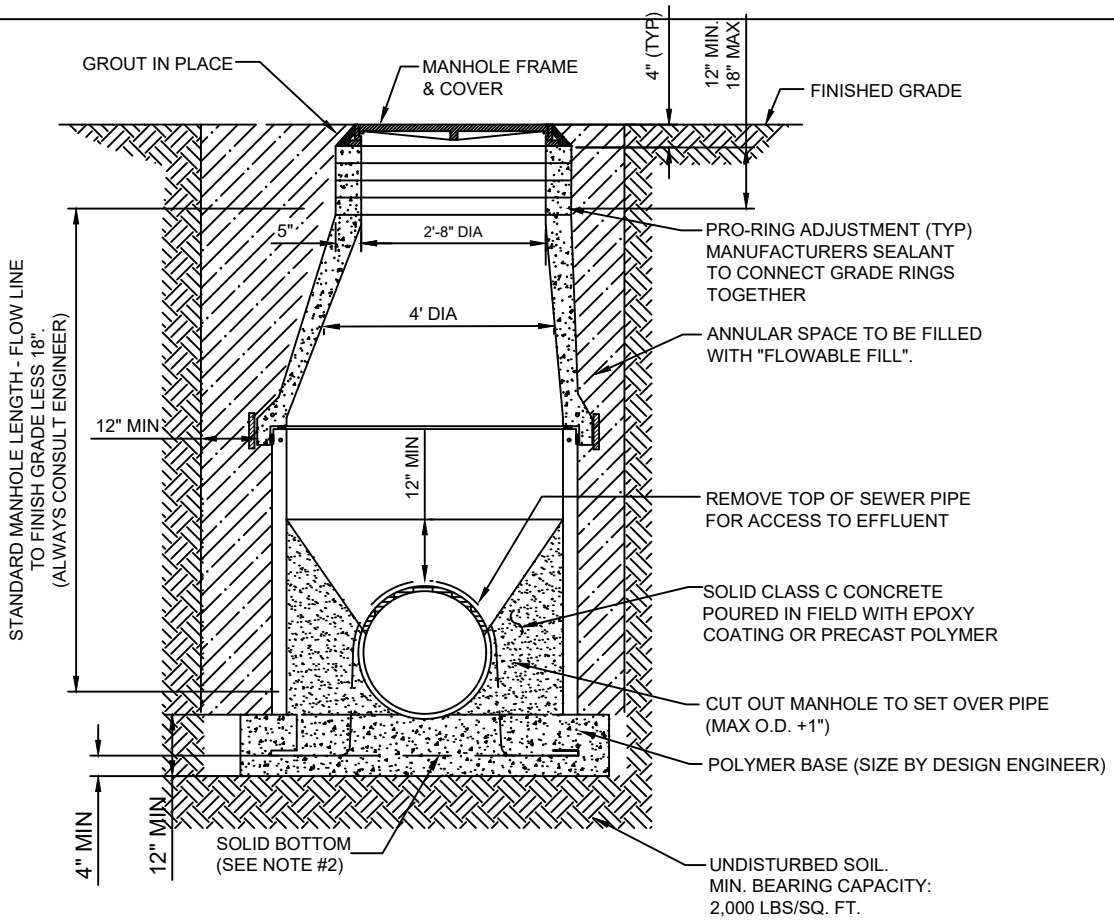

SECTION VIEW

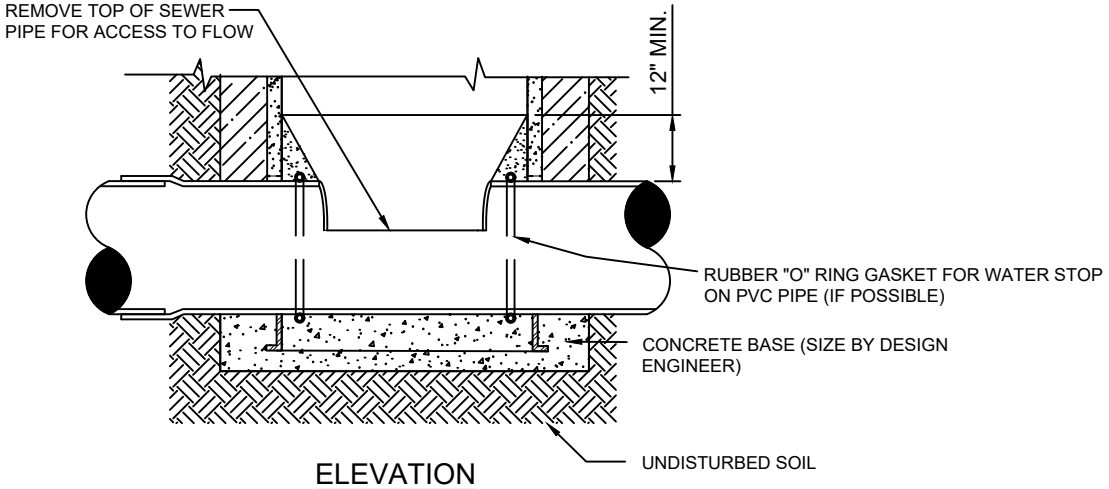

ELEVATION

(FOR SADDLE MANHOLE)

NOTES:

1. TO BE USED IN LIMITED SCENARIOS WITH SPECIAL APPROVAL FROM JEA.
2. A STANDARD TYPE "A" MANHOLE SHALL INCLUDE A SOLID BOTTOM WITH 3" HOLD DOWN FLANGE.
3. CONCRETE BASE TO BE SIZE BY ENGINEER. THE MINIMUM SIZE IS SHOWN ABOVE.

POLYMER REHAB BASE AND RISER MANHOLE

PLATE S-14B

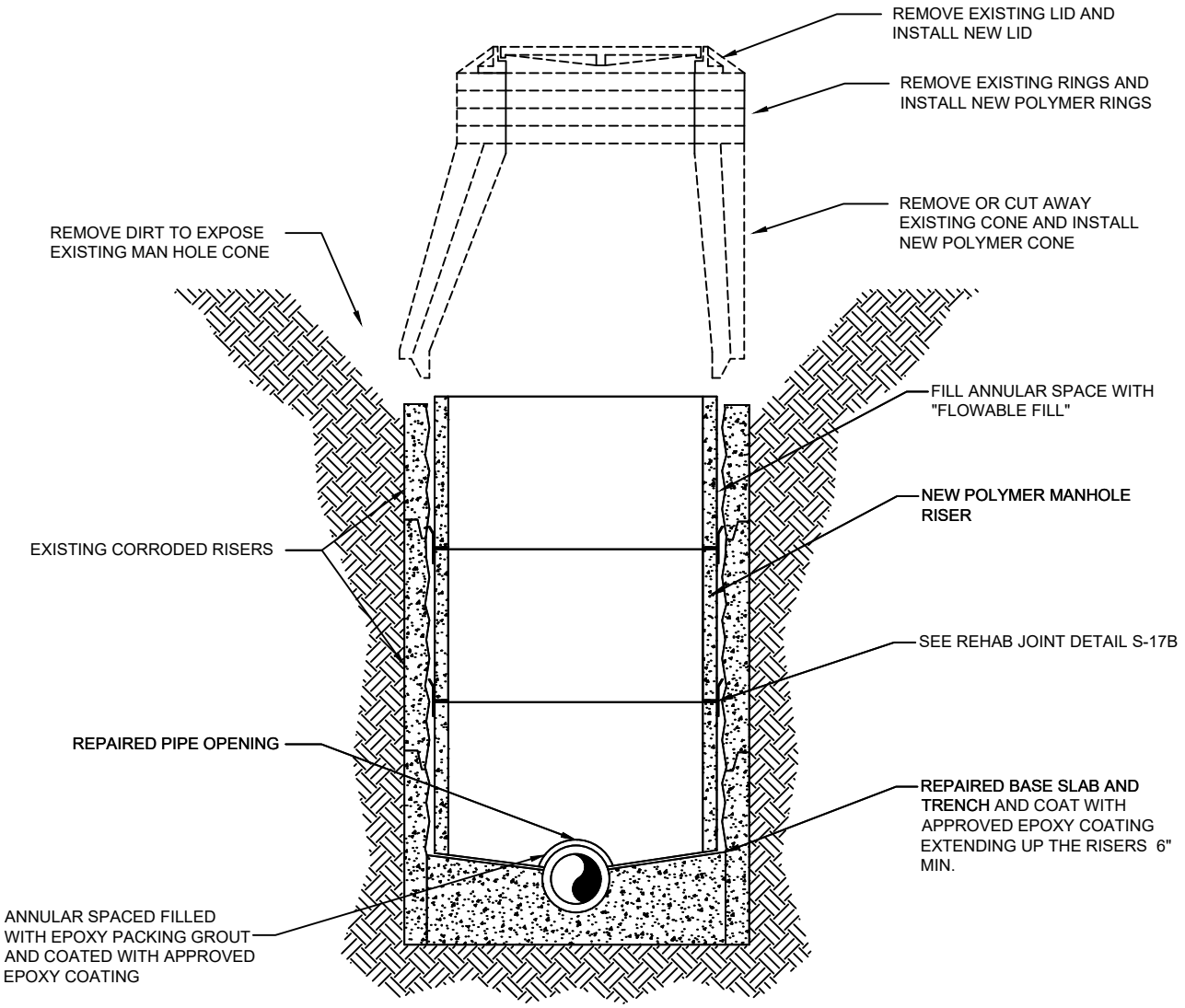

SECTION VIEW

NOTES:

1. AFTER INSTALLING THE BASE POLYMER BASE AND RISER ATTACHED GUIDE AND ADD ADDITIONAL RISERS AS REQUIRED.
2. CONTRACTOR SHALL FOLLOW ALL CONFINED SPACE REGULATIONS AND PROSECUTES.
3. FILL ANNULAR SPACE BETWEEN THE OLD AND NEW MANHOLE WITH "FLOWABLE FILL" AND BACK FILL AS REQUIRED TO EXISTING GRADE.

CONCRETE MANHOLE PIPE CONNECTION DETAIL

PLATE S-15

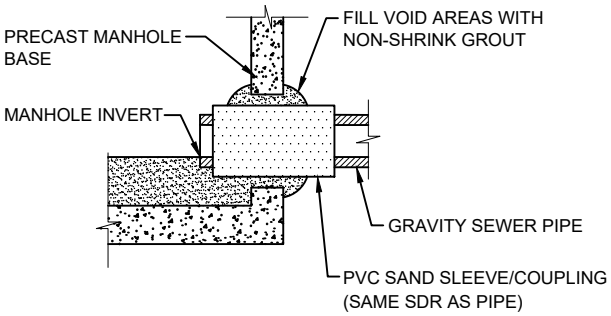

PVC SAND SLEEVE

(FOR EXISTING AND NEW M/H CONSTRUCTION)

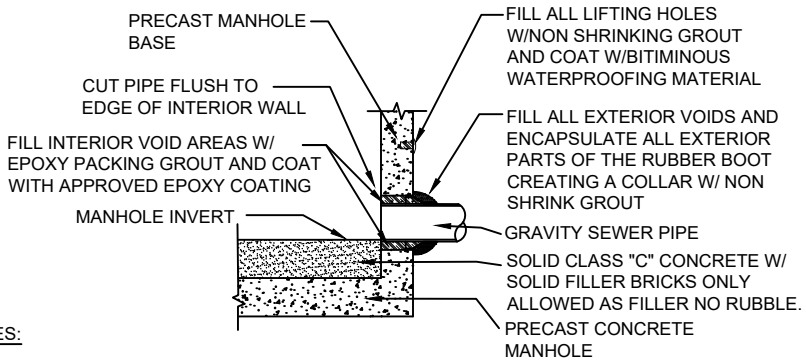

NOTES:

RUBBER BOOT, DOUBLE BANDED, 316 S/S CLAMPS, MEETING THE ASTM C923 STANDARD. Kor-N-Seal® I EX SERIES CONNECTOR WITH DOUBLE STAINLESS STEEL BANDS OR EQUAL.

RUBBER BOOT

(FOR NEW M/H CONSTRUCTION ONLY, MAXIMUM DEPTH 15FT)

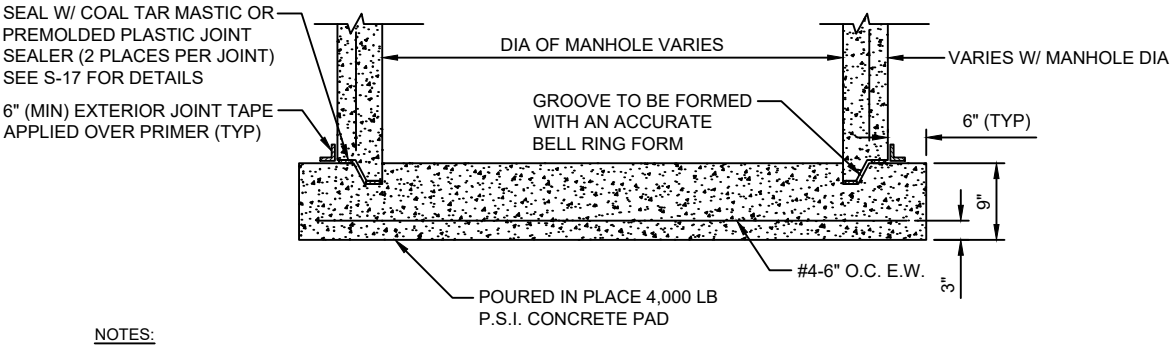

NOTES:

THE USE OF THE POURED IN PLACE MANHOLE BOTTOM SHALL BE MINIMIZED AND SHALL BE SPECIFICALLY APPROVED BY JEA PRIOR TO CONSTRUCTION.

MANHOLE BOTTOM

POLYMER MANHOLE PIPE CONNECTION DETAIL

PLATE S-15A

POLYMER CONCRETE FLOATATION COLLARS						
	DEPTH 0-10FT		DEPTH 11-15FT		DEPTH 16-20FT	
DIAMETER	MINIMUM BASE EXTENDER (IN)	MINIMUM WEIGHT OF TOTAL STRUCTURE (LBS)	MINIMUM BASE EXTENDER (IN)	MINIMUM WEIGHT OF TOTAL STRUCTURE (LBS)	MINIMUM BASE EXTENDER (IN)	MINIMUM WEIGHT OF TOTAL STRUCTURE (LBS)
48	2	7801	-	6101	-	7701
60	2	10000	1	11500	-	10400
72	3	16500	3	17300	1	18900
84	3	24700	3	27000	2	30600
96	3	35600	3	37600	2	46600

NOTES:

1. BUOYANCY FACTOR OF SAFETY = 1.2
2. ASSUMED LID THICKNESS = 8IN
3. MANHOLES ASSUMED TO BE STRAIGHT WITH NO REDUCER
4. GROUND WATER LEVEL ASSUMED TO BE AT SURFACE

FLOTATION COLLAR

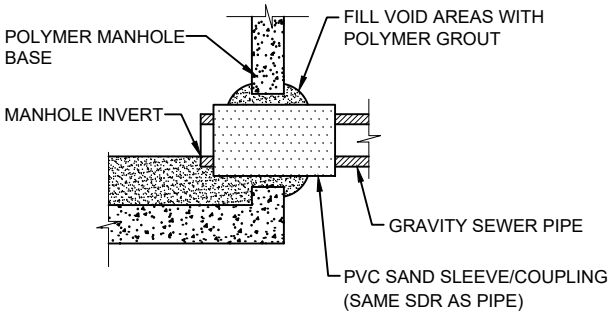

PVC SAND SLEEVE

(FOR EXISTING AND NEW M/H CONSTRUCTION)

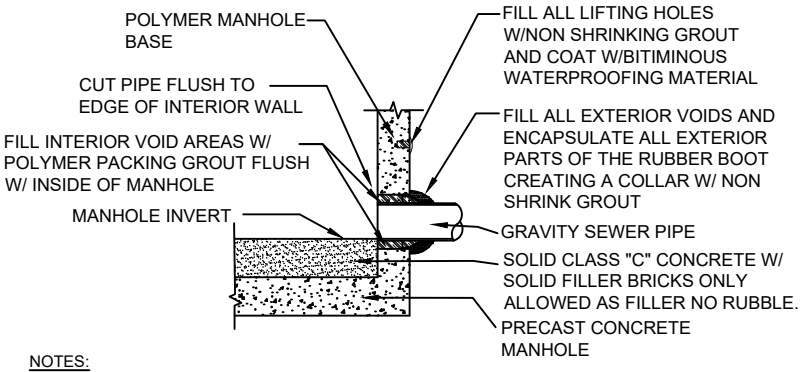

NOTES:

RUBBER BOOT, DOUBLE BANDED, 316 S/S CLAMPS, MEETING THE ASTM C923 STANDARD. Kor-N-Seal® I EX SERIES CONNECTOR WITH DOUBLE STAINLESS STEEL BANDS OR EQUAL.

RUBBER BOOT

(FOR NEW M/H CONSTRUCTION ONLY, MAXIMUM DEPTH 15FT)

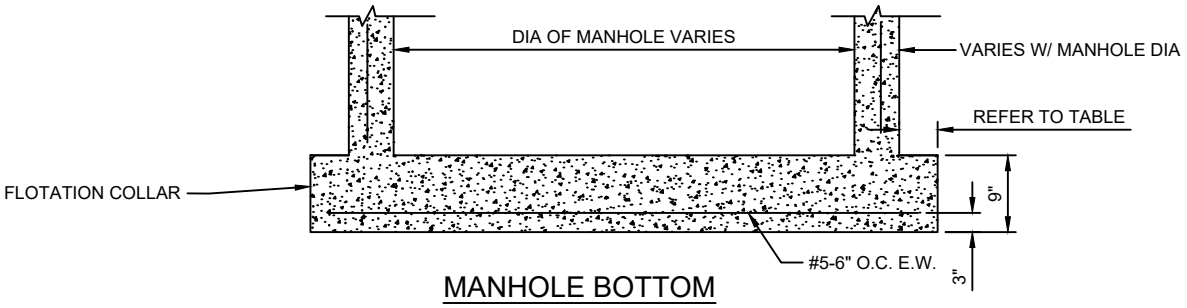

MANHOLE BOTTOM

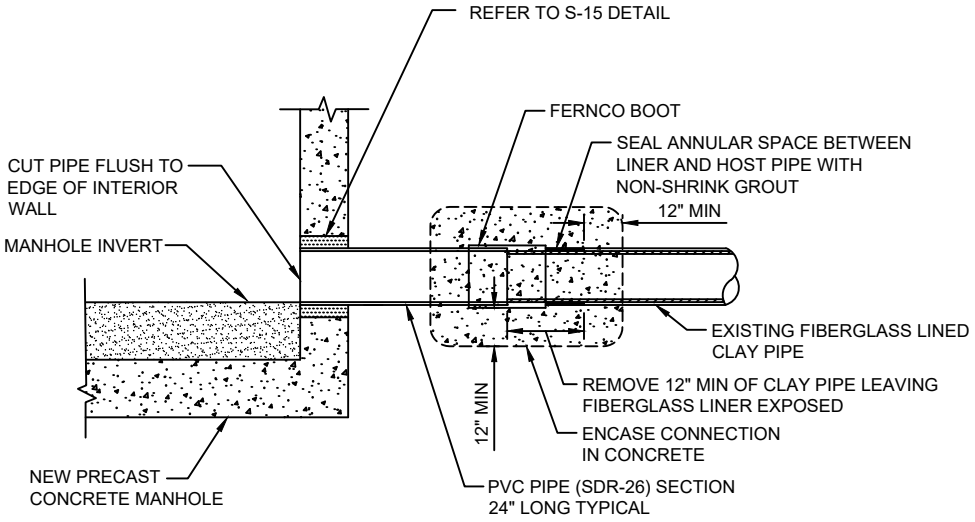

EXISTING CLAY PIPE WITH LINER

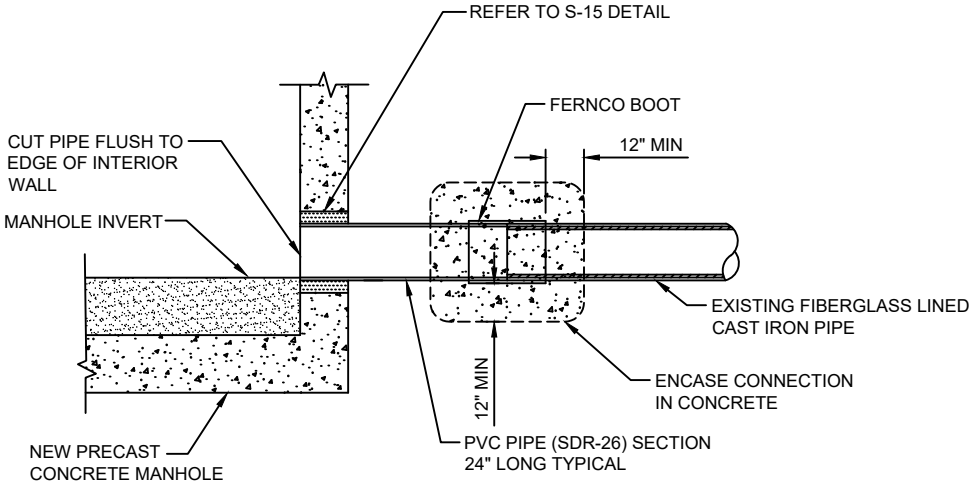

EXISTING CAST IRON PIPE WITH LINER

PRECAST CONCRETE SEWER MANHOLE JOINT DETAIL

PLATE S-17

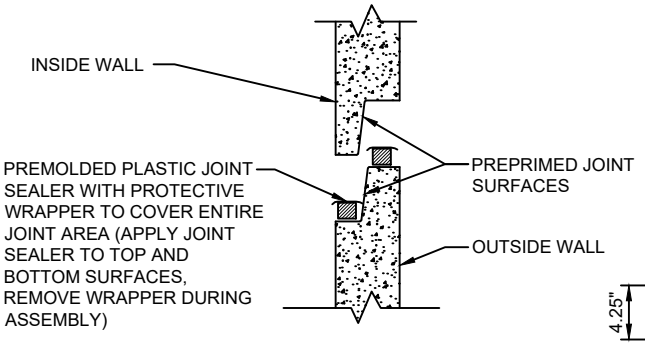

JOINT ASSEMBLY DETAIL

MANHOLE JOINT	"A"	"B"	"C"	"D
7° JOINT ANGLE	53.043	52.543	51.500	52.000

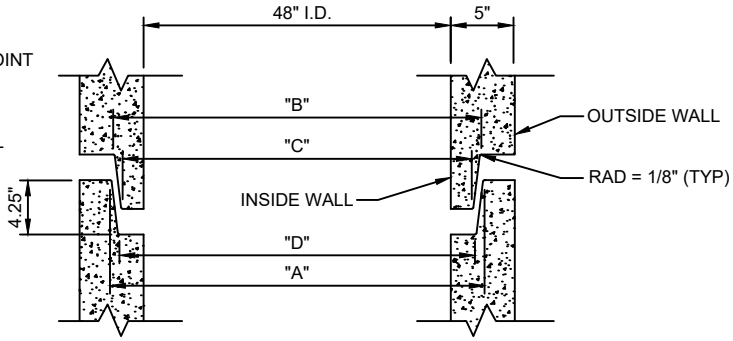

JOINT CONSTRUCTION DETAIL

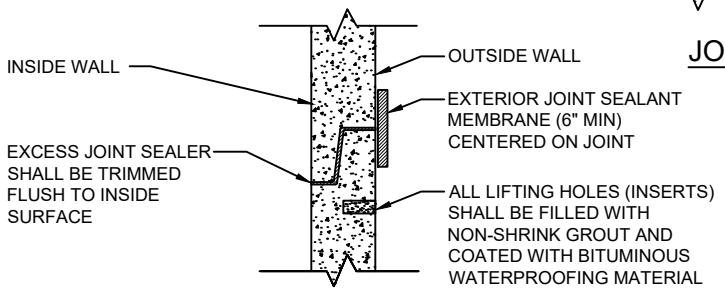

COMPLETED JOINT DETAIL

PRECAST POLYMER SEWER MANHOLE JOINT DETAIL

PLATE S-17A

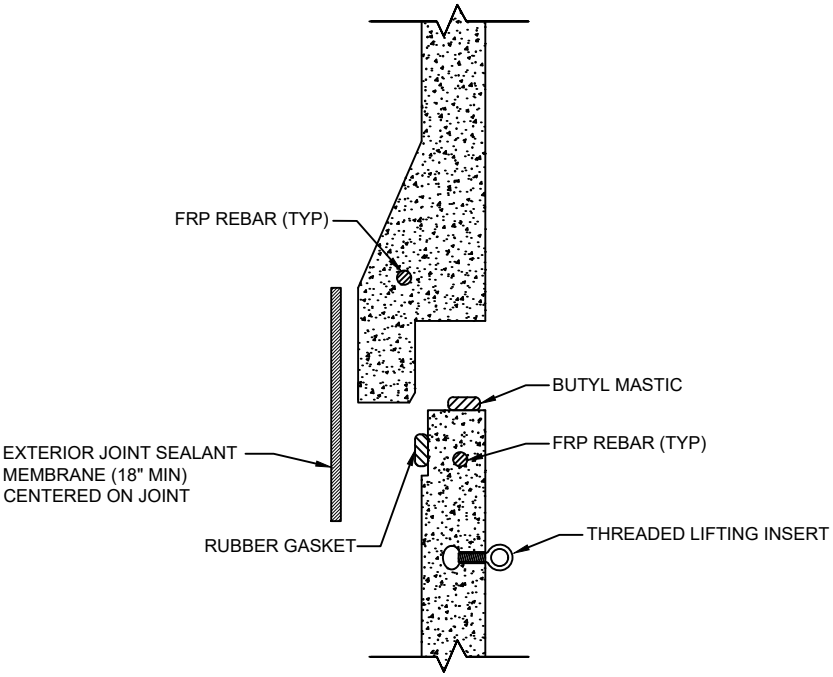

48"-72" JOINT DETAIL

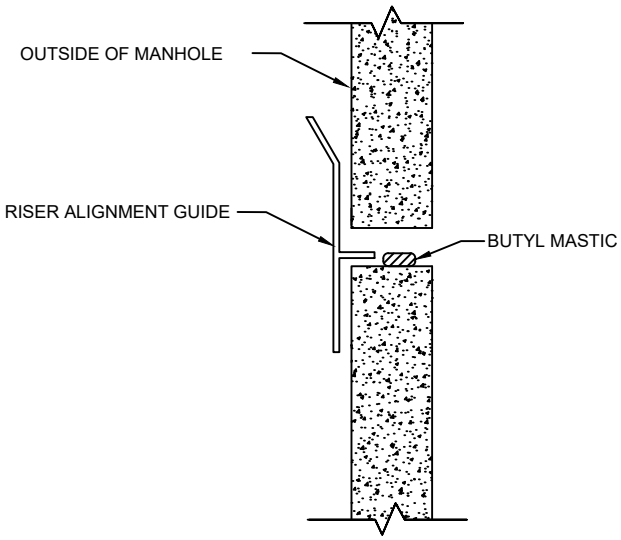

REHAB JOINT DETAIL

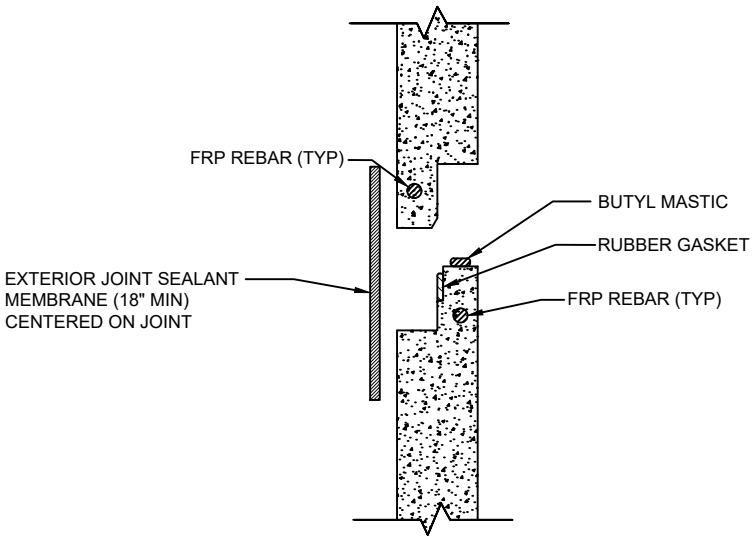

84"-144" JOINT DETAIL

TYPICAL FORCE MAIN CONNECTION TO MANHOLE

PLATE S-18

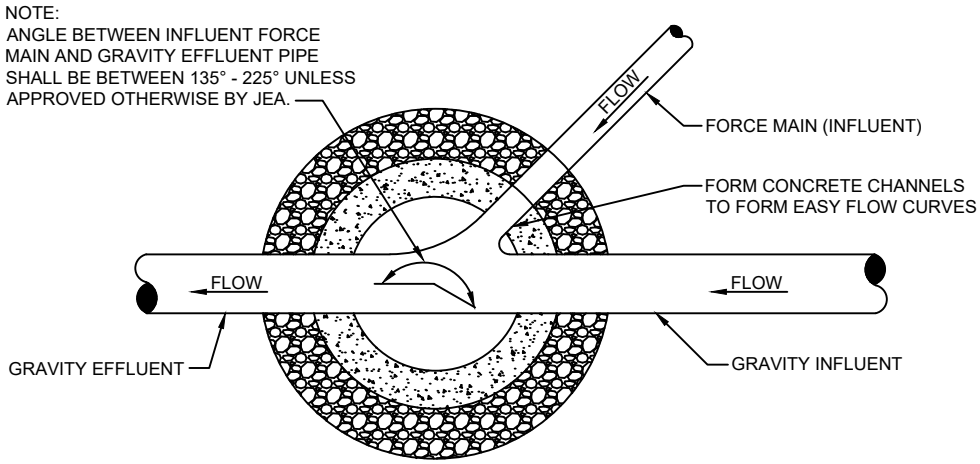

PLAN

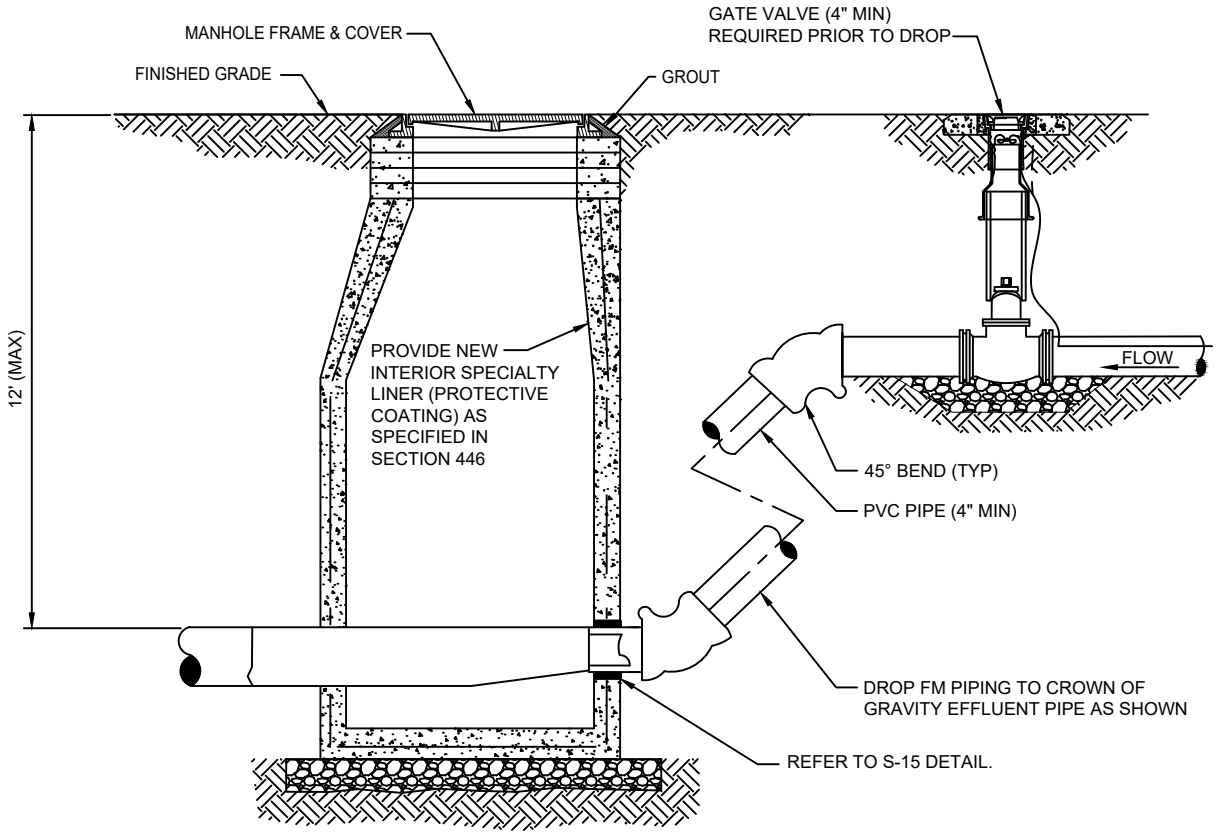

SECTION

MANHOLE FRAME AND COVER ADJUSTMENT
AFTER ROADWAY RE-SURFACING
PLATE S-34

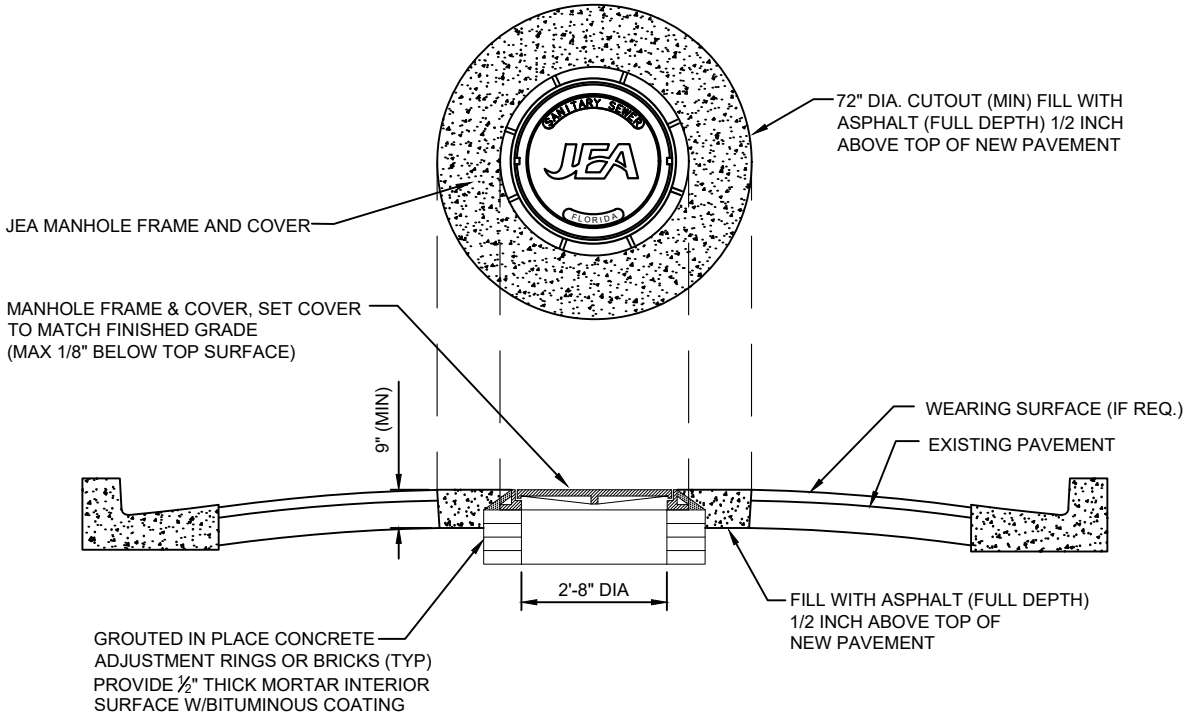

NOTES :

1. PROVIDE FULL DEPTH ASPHALT 1/2 INCH ABOVE TOP OF NEW PAVEMENT LEVEL, TO ALLOW FOR FUTURE ASPHALT MATERIAL COMPACTION. PLACE AND COMPACT ASPHALT IN 2" (MAX) LIFTS.

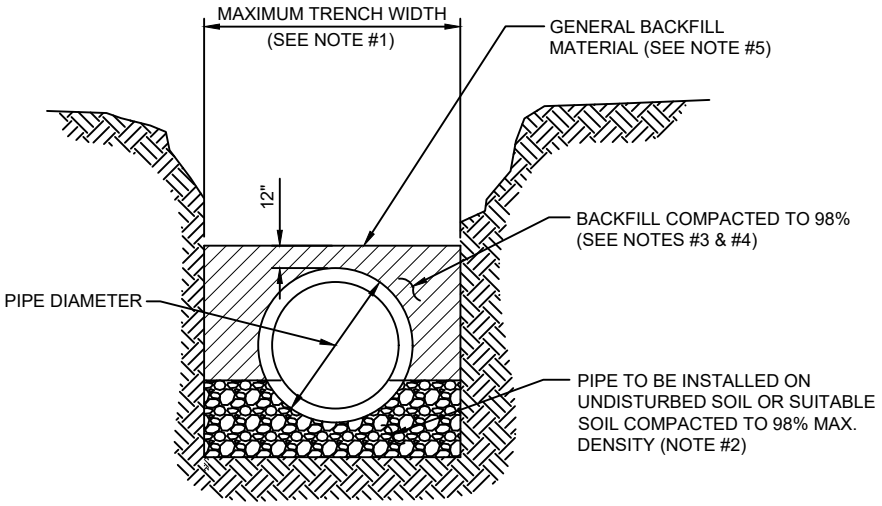

TYPICAL TRENCH

NOTES:

1. TRENCH SIDES SHALL BE APPROXIMATELY VERTICAL BETWEEN AN ELEVATION OF 1 FOOT ABOVE THE TOP OF THE PIPE AND THE CENTER LINE OF THE PIPE; OTHERWISE, TRENCH SIDES SHALL BE AS VERTICAL AS POSSIBLE OR AS REQUIRED BY OSHA STANDARDS. REFER TO THE MEASUREMENT AND PAYMENT SECTION (SECTION #801, PARAGRAPH #4)) TO DETERMINE MAXIMUM PAYLINE WIDTHS.

2. BELL HOLE SHALL BE DUG TO PERMIT THE ENTIRE STRAIGHT BARREL OF THE PIPE TO REST ON THE UNDISTURBED TRENCH BOTTOM. BOULDERS OR LOOSE ROCKS LARGER THAN 3/4 INCH IN SIZE WILL NOT BE PERMITTED IN BACKFILL UP TO 1 FOOT ABOVE THE TOP OF THE PIPE.

3. BACK FILL MATERIAL UP TO A LEVEL OF 1 FOOT OVER THE PIPE SHALL CONSIST OF AASHTO CLASS A-3 SOIL (SUITABLE SOIL) AND SHALL EXCLUDE CLAY MATERIALS AND LOOSE ROCKS LARGER THAN 3/4 INCH SIZE.

4. BACKFILL MATERIAL UP TO A LEVEL 1 FOOT OVER THE TOP OF PIPE OR BOTTOM OF STRUCTURES SHALL BE PLACED IN 6 INCH COMPACTED THICKNESS LAYERS AND SHALL BE COMPACTED TO 98% OF IT'S MAXIMUM DENSITY AS DETERMINED BY THE LABORATORY MODIFIED PROCTOR TEST, ASTM D1557.

5. SEE " EXCAVATION AND EARTHWORK", SECTION 408 FOR ADDITIONAL REQUIREMENTS INCLUDING REMOVAL AND REPLACEMENT OF UNSUITABLE SOILS, DEWATERING, COMPACTION REQUIREMENTS AND DENSITY TESTING OF COMPACTED SOILS.

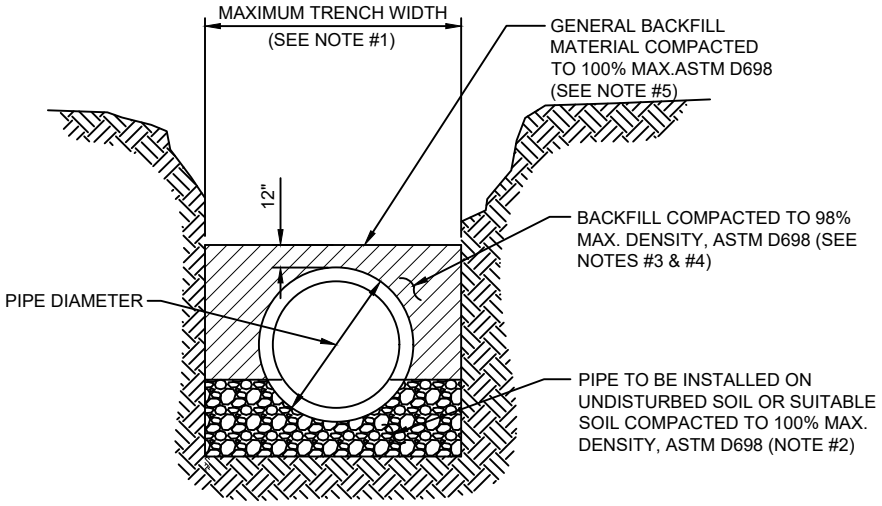

TYPICAL TRENCH

NOTES:

1. TRENCH SIDES SHALL BE APPROXIMATELY VERTICAL BETWEEN AN ELEVATION OF 1 FOOT ABOVE THE TOP OF THE PIPE AND THE CENTER LINE OF THE PIPE; OTHERWISE, TRENCH SIDES SHALL BE AS VERTICAL AS POSSIBLE OR AS REQUIRED BY OSHA STANDARDS. REFER TO THE MEASUREMENT AND PAYMENT SECTION (SECTION #801, PARAGRAPH #4)) TO DETERMINE MAXIMUM PAYLINE WIDTHS.

2. BELL HOLE SHALL BE DUG TO PERMIT THE ENTIRE STRAIGHT BARREL OF THE PIPE TO REST ON THE UNDISTURBED TRENCH BOTTOM. BOULDERS OR LOOSE ROCKS LARGER THAN 3/4 INCH IN SIZE WILL NOT BE PERMITTED IN BACKFILL UP TO 1 FOOT ABOVE THE TOP OF THE PIPE.

3. BACK FILL MATERIAL UP TO A LEVEL OF 1 FOOT OVER THE PIPE SHALL CONSIST OF AASHTO CLASS A-3 SOIL (SUITABLE SOIL) AND SHALL EXCLUDE CLAY MATERIALS AND LOOSE ROCKS LARGER THAN 3/4 INCH SIZE.

4. BACKFILL MATERIAL UP TO A LEVEL 1 FOOT OVER THE TOP OF PIPE OR BOTTOM OF STRUCTURES SHALL BE PLACED IN 6 INCH COMPACTED THICKNESS LAYERS AND SHALL BE COMPACTED TO 100% OF IT'S MAXIMUM DENSITY AS DETERMINED BY THE LABORATORY MODIFIED PROCTOR TEST, ASTM D698.

5. SEE " EXCAVATION AND EARTHWORK", SECTION 408 FOR ADDITIONAL REQUIREMENTS AND EXCEPTIONS INCLUDING REMOVAL AND REPLACEMENT OF UNSUITABLE SOILS, DEWATERING, COMPACTION REQUIREMENTS AND DENSITY TESTING OF COMPACTED SOILS.

HOUSE LATERAL - PLAN VIEW

PLATE S-19

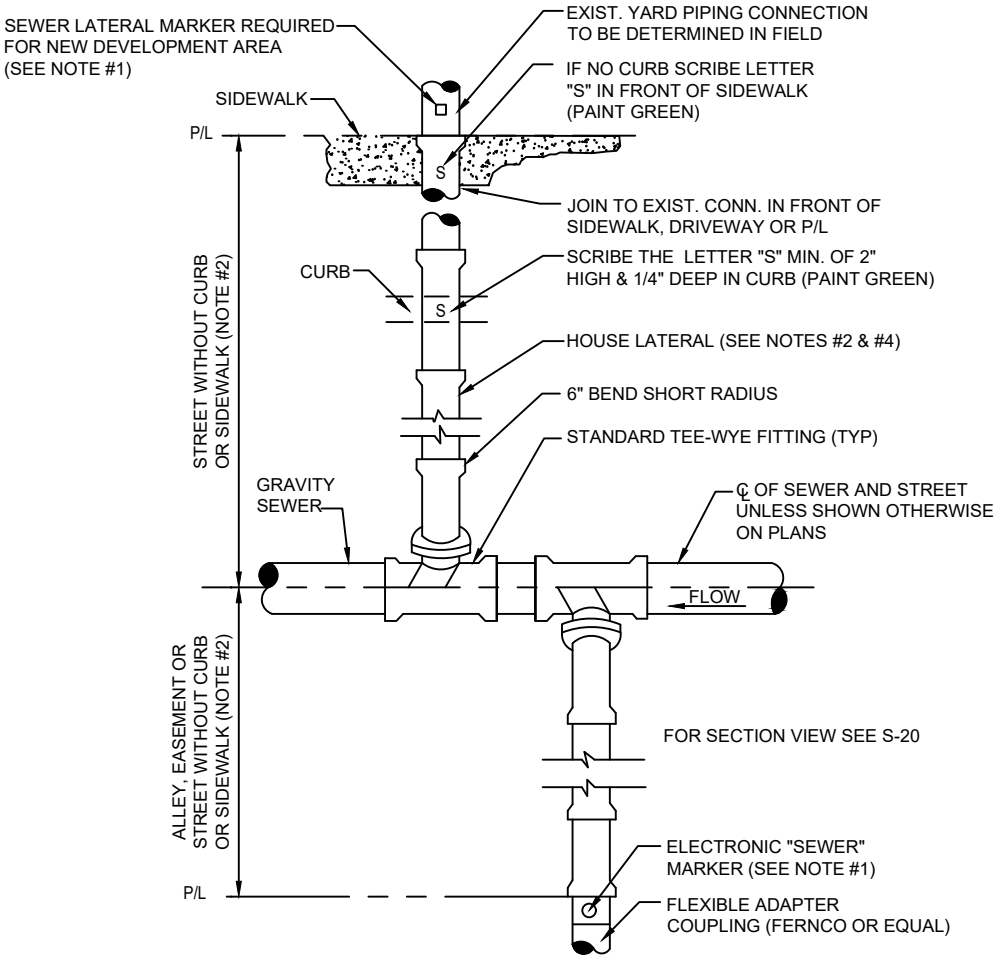

NOTES:

1. TO MARK THE LOCATION OF THE 6" PLUG FOR NEW SERVICE: FOR PROJECTS WHERE NO CONCRETE CURB EXIST, AN ELECTRONIC "SEWER" MARKER IS REQUIRED FOR ALL LATERALS WHICH ARE BEING INSTALL FOR FUTURE USE AT A MAX DEPTH OF 3' AT FINISH GRADE. FOR NEW DEVELOPMENT AREAS WHERE THE SEWER LATERAL IS "NOT IN USE", A LANDSCAPE TIMBER OR 3x3 MIN. P.T. POST (TOP PAINTED GREEN) SHALL BE INSTALLED. WHERE REQUIRED BY JEA OR NO CONCRETE CURB EXIST, AN ELECTRONIC "SEWER" MARKER SHALL BE INSTALLED TO MARKER SHALL ALSO BE INSTALLED..

2. THE MINIMUM SIZE OF ALL HOUSE LATERALS SHALL BE 6 INCHES. THE MAXIMUM LENGTH OF A HOUSE LATERAL SHALL BE 60 FEET (LENGTH BETWEEN SEWER MAIN OR MANHOLE TO CUSTOMERS PROPERTY LINE).

3. NO SEWER SERVICE CONNECTIONS PERMITTED ON GRAVITY SEWER PIPE WHICH ARE 16" AND LARGER.

4. ALL GRAVITY SEWER MAINS AND ASSOCIATED SEWER LATERAL PIPE AND FITTINGS (INCLUDING THE TEE-WYE FITTING) SHALL BE PVC SDR-26.

HOUSE LATERAL - SECTION VIEW

PLATE S-20

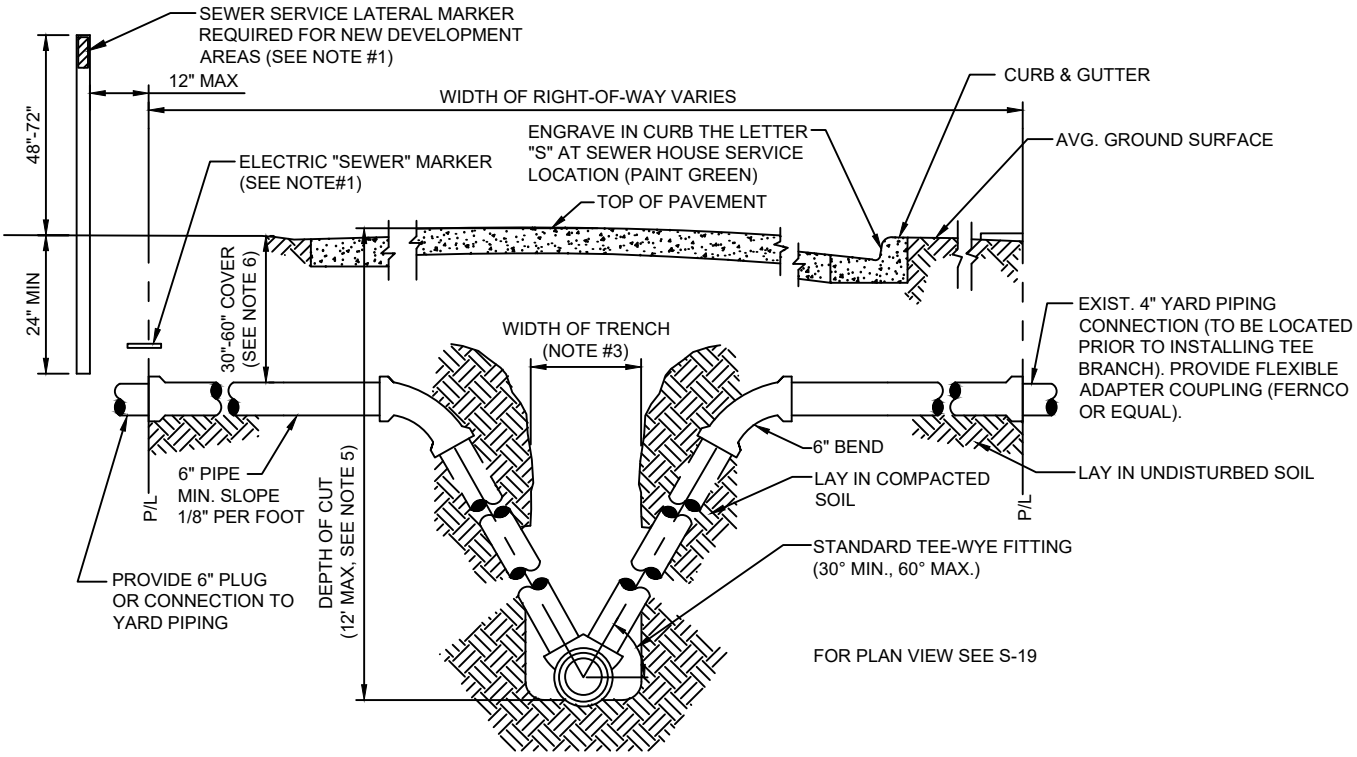

NOTES :

1. TO MARK THE LOCATION OF THE 6" PLUG FOR NEW SERVICE: FOR PROJECTS WHERE NO CONCRETE CURB EXIST, AN ELECTRONIC "SEWER" MARKER IS REQUIRED FOR ALL LATERALS WHICH ARE BEING INSTALL FOR FUTURE USE AT A MAX DEPTH OF 3' AT FINISH GRADE. FOR NEW DEVELOPMENT AREAS WHERE THE SEWER LATERAL IS "NOT IN USE", A LANDSCAPE TIMBER OR 3x3 MIN. P.T. POST (TOP PAINTED GREEN) SHALL BE INSTALLED. WHERE REQUIRED BY JEA OR NO CONCRETE CURB EXIST, AN ELECTRONIC "SEWER" MARKER SHALL BE INSTALLED TO MARKER SHALL ALSO BE INSTALLED.

2. THE MINIMUM SIZE OF ALL HOUSE LATERALS SHALL BE 6 INCHES. THE MAXIMUM LENGTH OF A HOUSE LATERAL SHALL BE 60 FEET (LENGTH BETWEEN SEWER MAIN OR MANHOLE TO CUSTOMERS PROPERTY LINE).

3. SEE MEASUREMENT AND PAYMENT SECTION FOR MAXIMUM PAYMENT WIDTHS.

4. ALL GRAVITY SEWER MAINS AND ASSOCIATED SEWER LATERAL PIPE AND FITTINGS (INCLUDING THE TEE-WYE FITTINGS) SHALL BE PVC SDR-26.

5. UNLESS APPROVED OTHERWISE BY A JEA O&M MANAGER, NO GRAVITY SEWER MAIN WITH SEWER SERVICE LATERALS SHALL BE CONSTRUCTED WITH A "DEPTH OF CUT" GREATER THAN 12 FEET.

6. SEWER SERVICE LATERALS ASSOCIATED WITH GRAVITY SEWER MAINS WHICH ARE DEEPER THAN 12 FEET, MUST BE ROUTED TO A GRAVITY SEWER HIGH-LINE, A MANHOLE OR OTHER JEA APPROVED METHOD.

7. THE SEWER SERVICE LATERAL SHALL BE CONSTRUCTED AT A DEPTH TO ALLOW A GRAVITY CONNECTION BY THE CUSTOMER, WHERE POSSIBLE (CONTINGENT UPON MEETING THE CUSTOMER'S ON-SITE CONDITIONS AND LOCAL CONSTRUCTION STANDARDS). A LATERAL REQUIRING MORE THAN 60" OF COVER MUST BE APPROVED, PRIOR TO CONSTRUCTION, BY JEA.

HOUSE LATERAL OVER CONFLICT PIPE

PLATE S-23

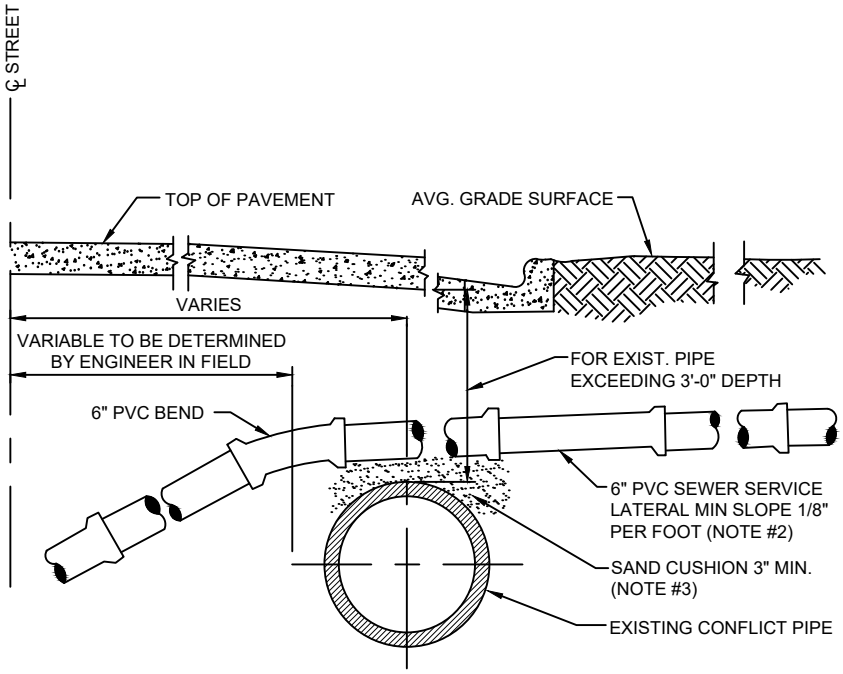

NOTES:

1. ALTERNATE GRADIENT FOR 6 INCH LATERAL SEWERS AT CONFLICTS WITH EXISTING UTILITIES.
2. FLATTER SLOPES MUST BE PRE-APPROVED BY JEA O&M MANAGER (ONLY) PRIOR TO CONSTRUCTION.
3. THE SOILS BETWEEN THE NEW MAIN AND THE CONFLICT PIPE SHALL BE COMPACTED TO 98% OF THE MAXIMUM DENSITY AS DETERMINED BY THE LABORATORY MODIFIED PROCTOR TEST, ASTM D 1557.

HOUSE LATERAL UNDER CONFLICT PIPE

PLATE S-24

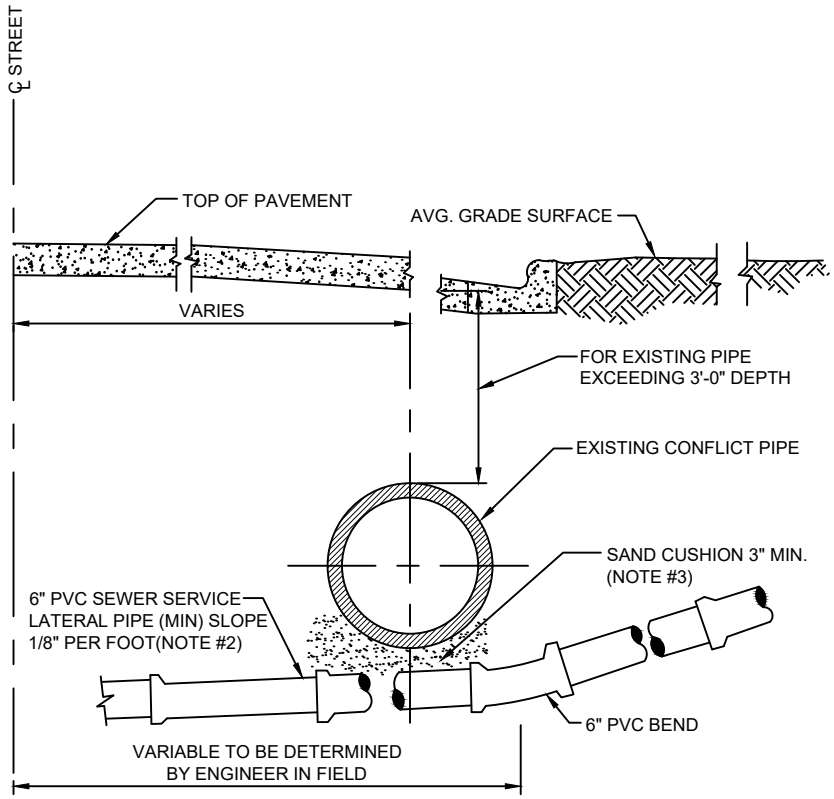

NOTES :

1. ALTERNATE GRADIENT FOR 6 INCH LATERAL SEWERS AT CONFLICTS WITH EXISTING UTILITIES.
2. FLATTER SLOPE MUST BE PRE-APPROVED BY JEA O&M MANAGER (ONLY) PRIOR TO CONSTRUCTION
3. THE SOILS BETWEEN THE NEW MAIN AND THE CONFLICT PIPE SHALL BE COMPACTED TO 98% OF THE MAXIMUM DENSITY AS DETERMINED BY THE LABORATORY MODIFIED PROCTOR TEST, ASTM D 1557.

LOW PRESSURE RESIDENTIAL SEWER FORCE MAIN CONNECTIONS

PLATE S-50

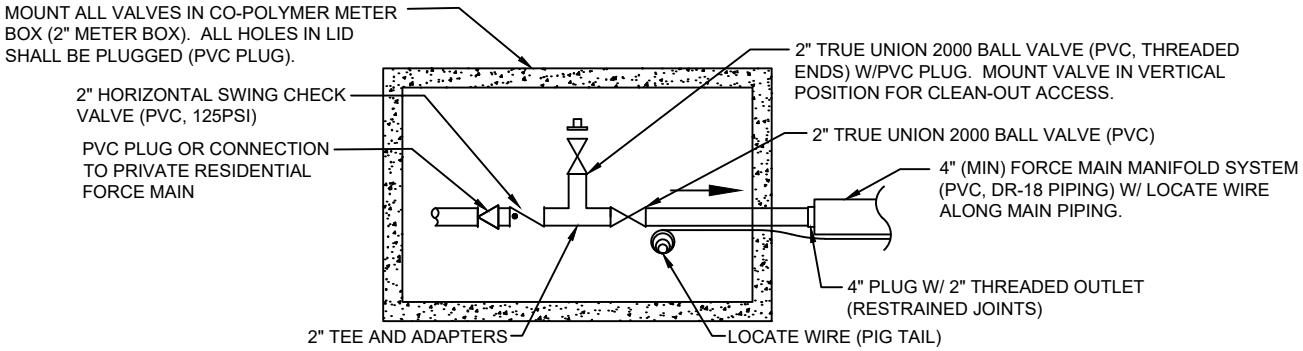

LOW PRESSURE SERVICE CONNECTION POINT

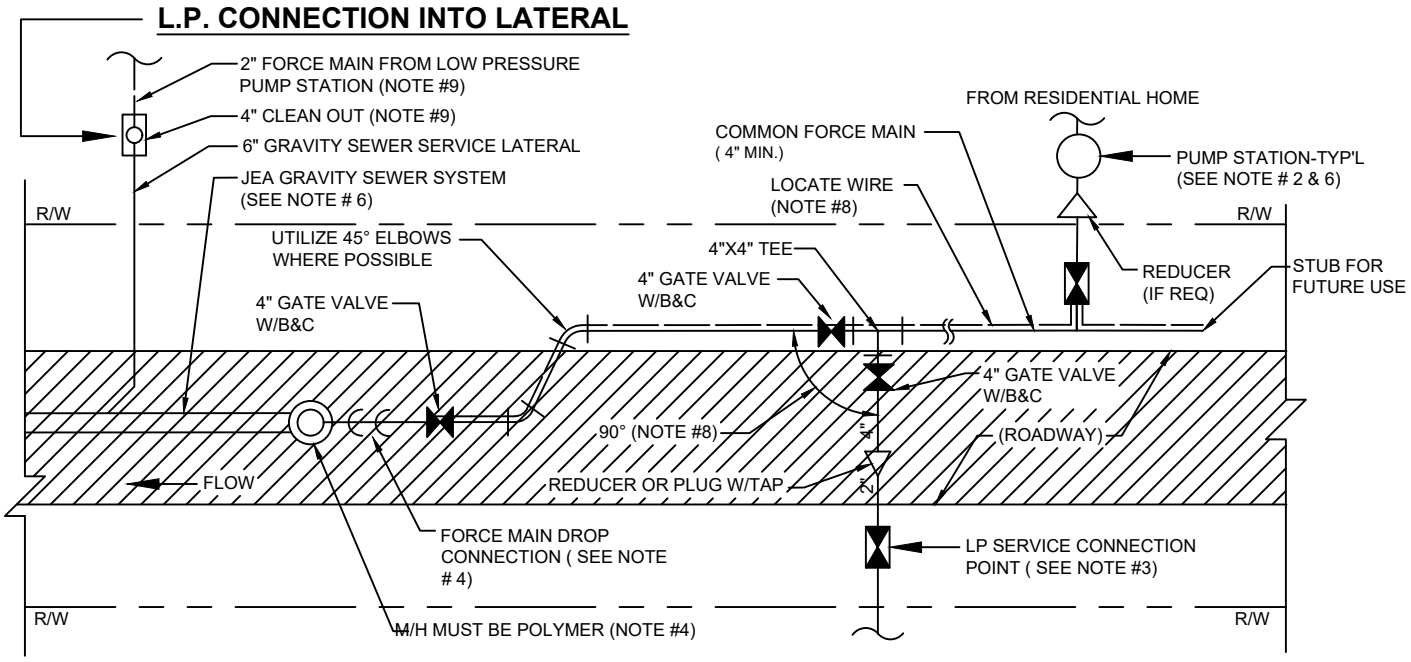

PLAN VIEW

LOW PRESSURE MANIFOLD SYSTEM

NOTES:

1. THIS LOW PRESSURE (LP) SEWER SERVICE ARRANGEMENT IS FOR " SPECIAL CASES ONLY " AND MUST FIRST BE APPROVED BY JEA PRIOR TO DESIGN OR CONSTRUCTION. THIS LOW PRESSURE SEWER MANIFOLD ARRANGEMENT MAY BE UTILIZED TO SERVE UP TO 20 EQUIVALENT RESIDENTIAL UNITS (ERU)AND SHALL BE PERMITTED SIMILAR TO A GRAVITY SEWER MAIN. THIS STANDARD SHALL APPLY TO RESIDENTIAL CUSTOMERS ONLY.

2. RESIDENTIAL PUMP STATION (PS) SHALL BE MAINTAINED BY THE CUSTOMER AND SHALL MEET EPB RULE No.3 (DUVAL COUNTY). THE CUSTOMER IS RESPONSIBLE FOR FINAL PUMP DESIGN AND SELECTION. A CHECK VALVE AND BALL VALVE SHALL BE PROVIDED AT THE PS AND MAINTAINED BY THE CUSTOMER.

3. EACH CUSTOMER SHALL HAVE A SEPARATE "LOW PRESSURE SERVICE CONNECTION POINT" (SEE ABOVE DETAIL). THE CHECK VALVE LOCATED IN THE BOX SHALL DEFINE THE "POINT OF SERVICE". THIS BOX (2" METER BOX WITH PVC PLUG IN TOP) SHALL BE APPROXIMATELY 7 FEET INSIDE THE R/W AND A MINIMUM OF 6 FEET FROM THE WATER METER BOX (IN FRONT OF CUSTOMER HOME).

4. LOW PRESSURE FORCE MAIN DROP CONNECTION AT M/H SHALL INCLUDE A 4" GATE VALVE AND BE IN ACCORDANCE WITH JEA STANDARD PLATE No. S-18. FOR OTHER LOCATION LIMITATIONS SEE DETAIL (W-10 & W-11).

5. ALL PUMP STATIONS, PIPES (W/LOCATE WIRE), VALVES AND FITTINGS WHICH ARE MAINTAINED BY JEA SHALL BE OF JEA APPROVED MATERIALS AND SHALL BE CONSTRUCTED IN ACCORDANCE WITH JEA W&S STANDARD

6. PER DEP RULES AND EPB RULE No.3, A LOW PRESSURE PUMP STATION CONNECTION INTO A JEA FORCE MAIN IS NOT ALLOWED. (NO EXCEPTIONS).

7. AS BUILTS FOR ALL UTILITIES WITHIN THE R/W SHALL BE PROVIDED TO JEA IN ACCORDANCE WITH JEA STANDARDS.

8. LOCATE WIRE IS REQUIRED ALONG THE MAIN PIPING AND SERVICE LATERALS TO THE LAST CUSTOMER CONNECTION BOX. (AS SHOWN IN DETAIL)

9. FOR RESIDENTIAL CUSTOMERS LOCATED IN AREAS OF LOW ELEVATION, THE CUSTOMER MAY BE REQUIRED TO OPERATE AND MAINTAIN A LOW PRESSURE PUMP STATION (SEE NOTE #2) WHICH MAY DISCHARGE INTO A 6 INCH GRAVITY SEWER SERVICE LATERAL. IN THESE CASES, THE CUSTOMER SHALL PROVIDE AND MAINTAIN A 4 INCH CLEAN-OUT LOCATED AT THE CONNECTION POINT (AT R/W LINE).

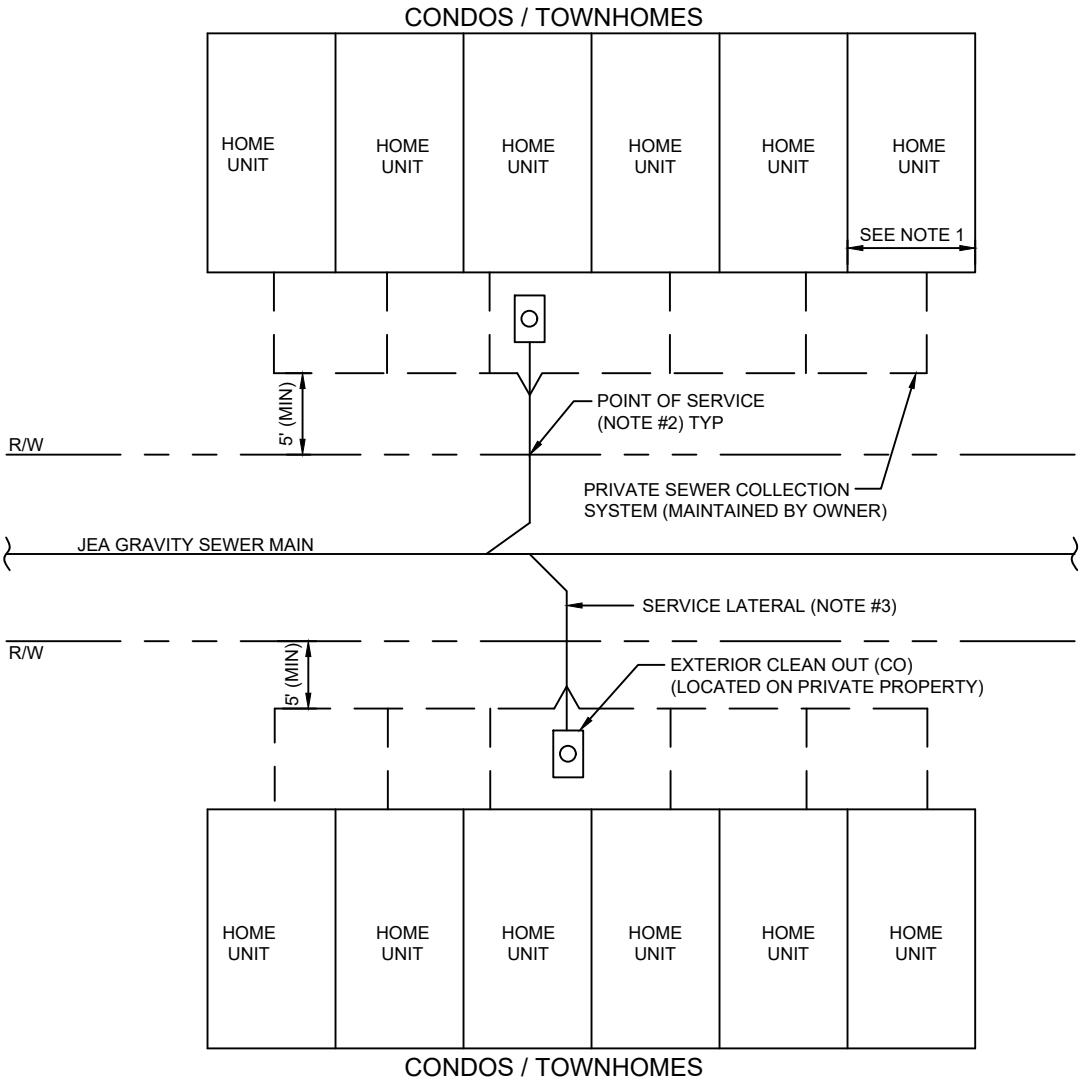

GANG SEWER SERVICES

NOTES:

1. THIS STANDARD MAY APPLY TO CONDOS AND/OR TOWNHOMES WITH PRIVATE LOT LINES LESS THAN 40 FEET WIDE.

2. THE " POINT OF SERVICE " (POS) SHALL BE DEFINED AT THE R/W LINE FOR ALL LATERALS. JEA WILL ONLY BE RESPONSIBLE FOR O&M (EXCLUDING STOPPAGES) BEGINNING AT THE P.O.S. TO THE MAIN (60 FEET MAX). THEREFORE, O&M RESPONSIBILITY BETWEEN THE P.O.S. AND THE CUSTOMER IS BY OTHER (HOME OWNER ASSOCIATION OR OTHER). CUSTOMER WILL CONTINUE TO BE RESPONSIBLE FOR FREE FLOW OF SEWAGE BETWEEN CUSTOMER TO MAIN.

3. SERVICE LATERALS BETWEEN MAIN AND R/W SHALL BE 6" SDR-26 (PVC) AT 1/4" SLOPE, AT A MINIMUM, AND SERVE A MAXIMUM OF 6 HOME UNITS. ENGRAVE AN "S" IN CURB TO SHOW LOCATION OF LATERAL. MANHOLE SHALL BE REQUIRED AT THE MAIN IF THE LATERAL IS LARGER THAN 6 INCH SIZE. LARGER LATERALS SHALL BE SIZED BY DESIGN ENGINEER. ALL PIPING ON PRIVATE PROPERTY SHALL MEET LOCAL PLUMBING CODE REQUIREMENTS AND BE MAINTAINED BY OWNER. ALL CLEANOUTS LOCATED IN PAVED AREAS SHALL BE CAST IRON FRAME AND TOP.

SEWER LATERAL VACUUM SYSTEM

PLATE S-52

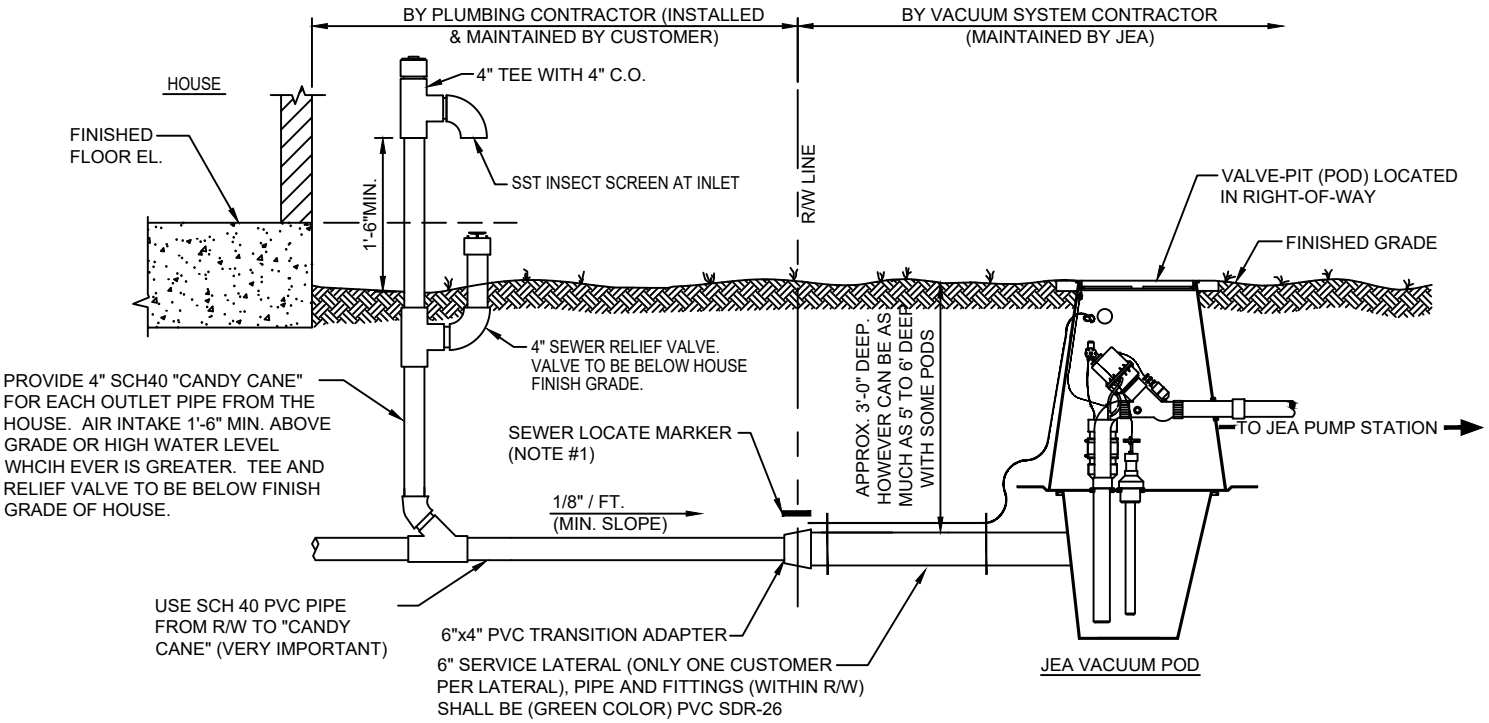

NOTES:

1. AN "S" SHALL BE SCRIBED IN THE CURB (PAINTED GREEN) TO INDICATE LOCATION OF LATERAL AT THE R/W. FOR SEPTIC TANK PHASE-OUT PROJECTS AN ELECTRONIC "SEWER" MARKER IS REQUIRED FOR ALL LATERALS WHICH ARE "NOT" IN USE". FOR NEW DEVELOPMENT AREAS WHERE THE SEWER LATERAL IS "NOT IN USE", A LANDSCAPE TIMBER OR 3x3 MIN. P.T. POST (TOP PAINTED GREEN) SHALL BE INSTALLED TO MARK THE LOCATION OF THE 6" PLUG.

2. THE MINIMUM SIZE OF ALL HOUSE LATERALS SHALL BE 6 INCHES AND SHALL BE 6 FEET LONG, AT A MINIMUM. THE MAXIMUM LENGTH OF A HOUSE LATERAL SHALL BE 60 FEET (LENGTH BETWEEN VALVE PIT OR MANHOLE TO CUSTOMERS PROPERTY LINE).

3. LOCATE WIRE SHALL BE INSTALLED ALONG THE 6" GRAVITY SEWER LATERALS BEGINNING INSIDE THE POD (PROVIDE A 2" DIA. x 1/8" THICK BRASS TAG INDICATING THE HOME SERVICE ADDRESS OR APPROVED PROPERTY I.D. (EMBOSSED) AND ATTACH TO THE END OF THE WIRE) TO THE R/W. WIRE END SHALL BE TAPED WATER TIGHT AND SECURED TO THE PIPE, BELOW GROUND. THE END OF THE LOCATE WIRE AT THE R/W DOES NOT HAVE TO BE EXPOSED. LOCATE WIRE SHALL BE 10 GAGE, SINGLE STRAND, UF RATED (DIRECT BURIAL), COPPER WIRE WITH 30 MIL (MIN.) INSULATION WITH EITHER WHITE OR YELLOW COLOR. THE CONTRACTOR SHALL PROVIDE FIELD LOCATE WIRE TESTING AS PART OF THE FINAL PROJECT INSPECTION.

4. REMOVE THE VALVE OUT OF PODS WHICH SERVE NOT IN USE PODS (NO ACTIVE LATERALS) AFTER DRY FIT HAS BEEN CONFIRMED AND PROVIDE 3" PVC SPOOL PIECE AS SHOWN ABOVE. FOR THESE CASES, DELIVER THE NEW UNUSED VALVE TO JEA OEM DEPARTMENT FOR FUTURE INSTALLATION.

5. VACUUM SEWER MAINS (PIPE AND FITTINGS) SHALL BE GREEN PVC DR-25 MEETING ASTM D-3139. THE USE OF WYE FITTINGS (PVC OR D.I.P. WITH EPOXY COATINGS) SHALL BE UTILIZED (NO TEE FITTING).

6. VACUUM SEWER (POD) SHALL NOT BE PLACED IN DRIVEWAY, REFERENCE RULES AND REGULATIONS FOR WATER, SEWER AND RECLAIM SERVICES.

COMMON SANITARY STUB-OUT ALONG
CONTINUOUS RIGHT-OF-WAY

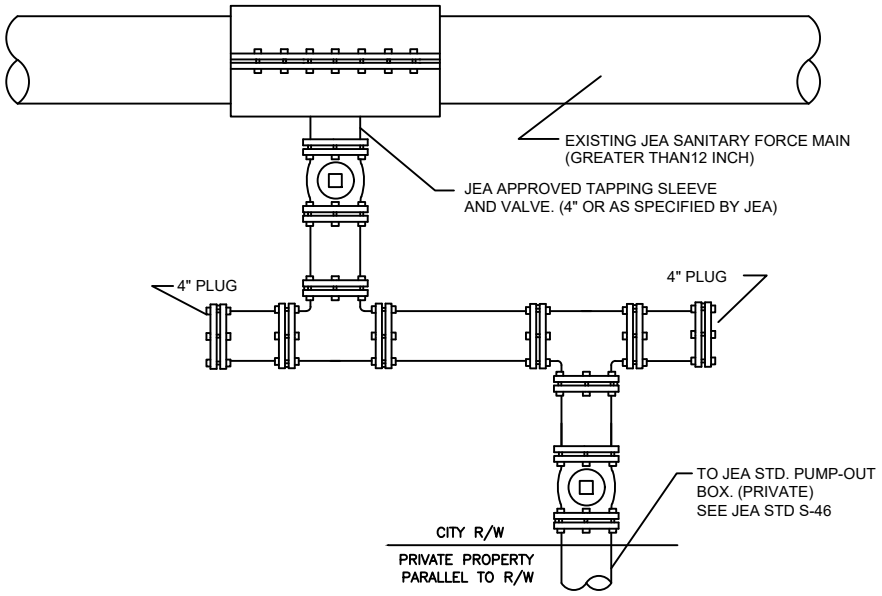

FORCE MAIN
SERVICE STUB FOR
16" AND LARGER PIPING

FORCE MAIN SIZE	DISTANCE BETWEEN TAPS
16"	300LF
20"	500LF
24"	1000LF
30"	1000LF

PRIVATE PUMP OUT ASSEMBLY

PLATE S-46

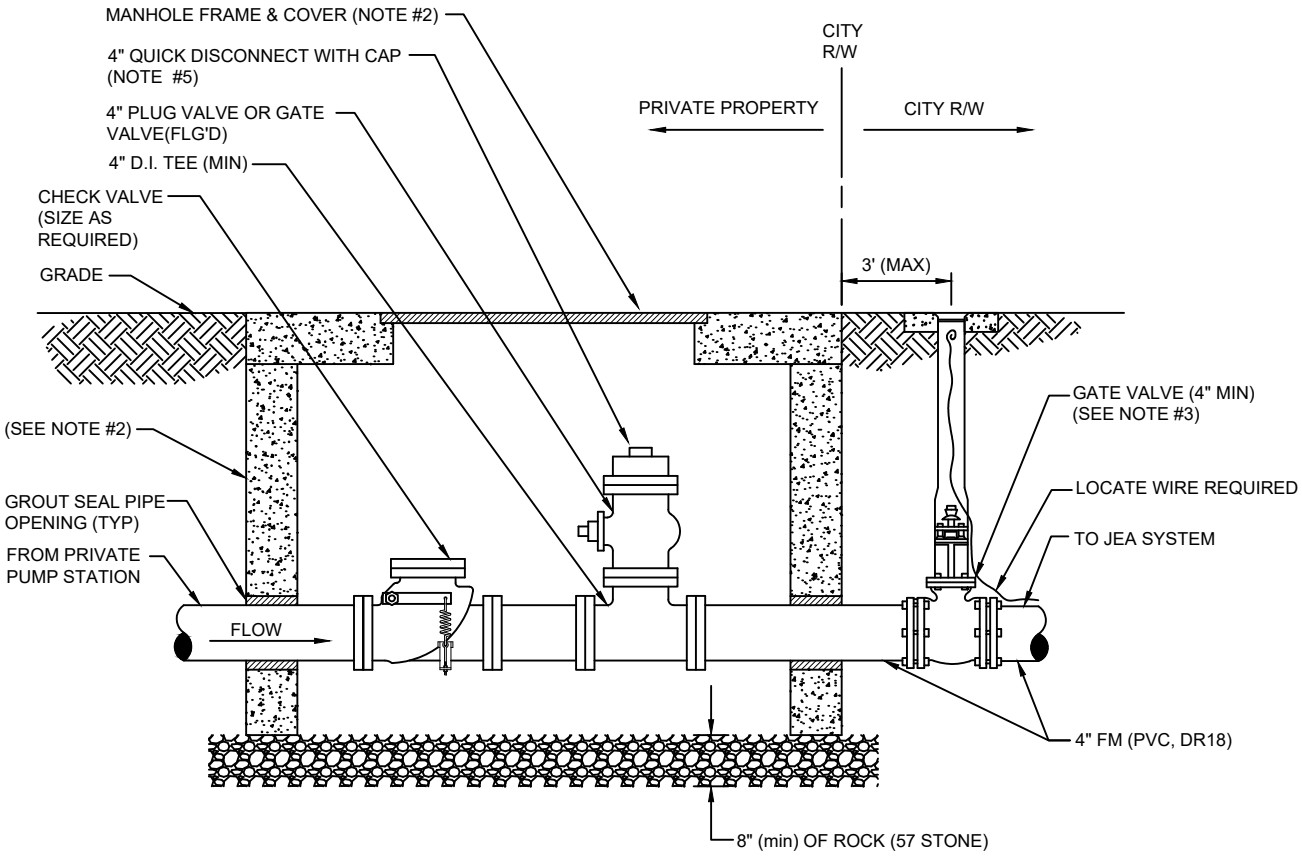

NOTES :

1. SEWER PUMP-OUT BOX SHALL BE CONSTRUCTED ON PRIVATE PROPERTY AND LOCATED AT THE R/W LINE. THE PREFERRED CONSTRUCTION LAYOUT IS SHOWN ABOVE.
2. ASSEMBLY TO BE ENCLOSED WITHIN A 48"x48" (MIN) PRECAST CONCRETE BOX WITH OPEN BOTTOM W/H-20 TRAFFIC LOADING COVER OR TYPE "C" MANHOLE OPEN BOTTOM WITH FRAME AND COVER (NON-JEA LOGO TYPE COVER).
3. A JEA APPROVED GATE VALVE (4" MIN) SHALL BE PROVIDED AT THE R/W LINE FOR ALL FORCE MAIN PIPING WHICH EXCEEDS 15' LINEAR FEET WITHIN THE CITY R/W AREA. THE GATE VALVE AT THE R/W LINE IS NOT REQUIRED WHERE THE CONNECTION (CONNECTION AT JEA MAIN) IS LOCATED ON THE SAME SIDE OF THE STREET AS THE PUMP-OUT BOX (SHORT-SIDE SERVICE) AND CONSIST OF 15 LINEAR FEET OR LESS WITHIN THE CITY R/W AREA.
4. NO CONNECTIONS PERMITTED INTO JEA FORCE MAINS WHICH ARE GREATER THAN 12" WITHOUT PRIOR JEA APPROVAL.
5. QUICK DISCONNECT WITH CAP SHALL BE ALUMINUM AND BE POSITIONED DIRECTLY UNDER MANHOLE LID FOR ACCESS.

FUSIBLE PVC PIPE ALLOWABLE BEND RADIUS AND PULLING FORCE

PLATE S-21

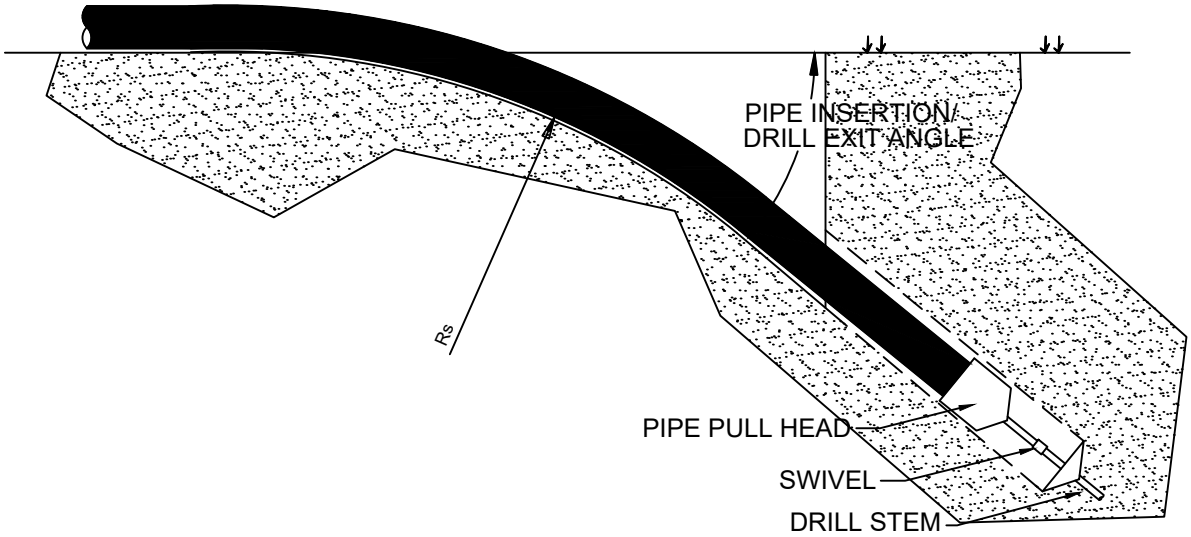

PIPE SIZE	MINIMUM ALLOWABLE BENDING RADIUS - Rs (FT)	MAXIMUM ALLOWABLE PULLING FORCE (DR18) (K-LBS)
4"	100	10
6"	144	21
8"	189	37
10"	231	56
12"	275	80

- PIPE SIZES GREATER THAN 12" SHALL BE HIGH DENSITY POLYETHYLENE (HDPE), CALCULATIONS SUPPLIED BY THE DESIGNED ENGINEER

DUAL DIRECTIONAL DRILLING

PLATE S-21A

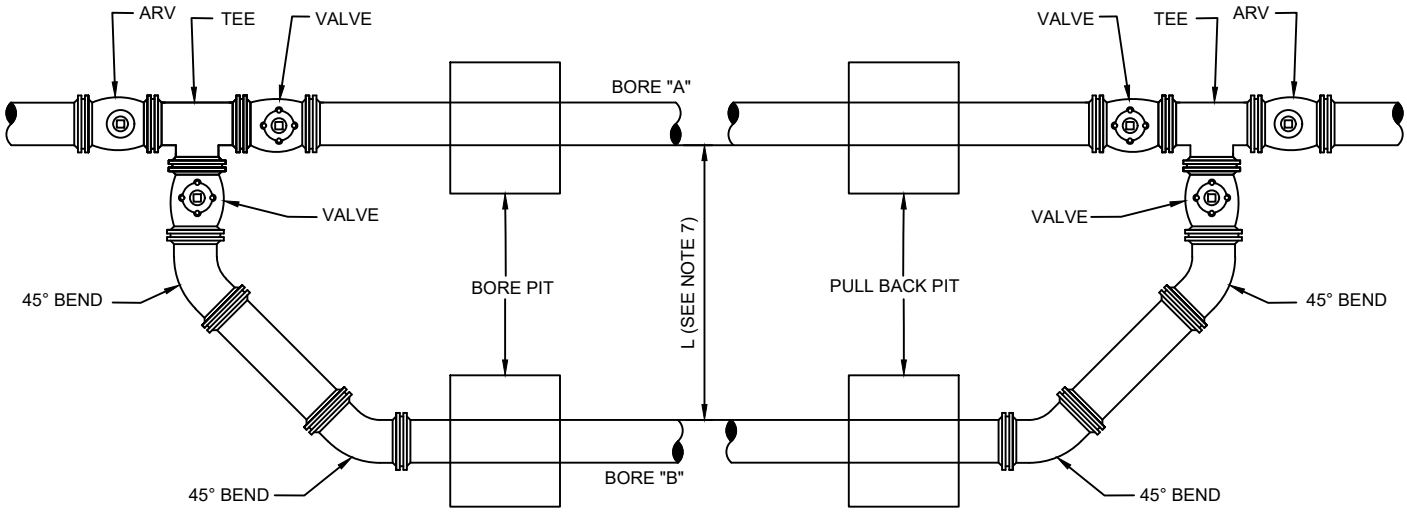

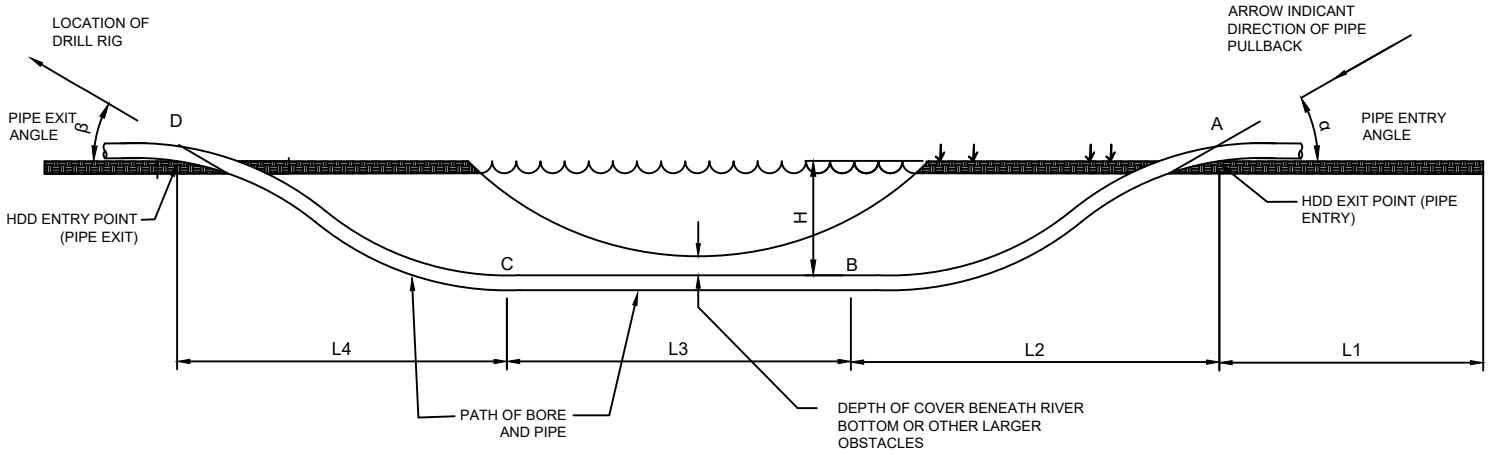

NOTES:

1. POINTS A, B, C, & D PULL FORCE ON PIPE.
2. L1-ADDIONAL LENGTH OF PIPE REQUIRED FOR HANDLING AND THERMAL CONTRACTION
3. L2-HORIZONAL DISTANCE TO ACHIEVE DESIRED DEPTH
4. L3-ADDITIONAL DISTANCE TO TRAVERSE AT DESIRED DEPTH
5. L-4 HORIZONTAL DISTANCE TO RISE TO SURFACE
6. H-DEPTH OFF BORE HOLE FROM GROUND SURFACE
7. HORIZONTAL AND VERTICAL DISTANCE BETWEEN BORE "A" TO BORE "B"

PVC PIPE RESTRAINT JOINT SCHEDULE

PLATE S-38A

LENGTH (L) TO BE RESTRAINED

(SEE PLATE Nos. 38C & 38D FOR ADDITIONAL DETAILS)

NOMINAL PIPE SIZE (IN.)	HORIZONTAL BENDS				VERTICAL OFFSETS 45° BENDS (SEE NOTE 4)		VALVES OR DEAD ENDS
	90° BENDS L (FT.)	45° BENDS L (FT.)	22.5° BENDS L (FT.)	11.25° BENDS L (FT.)	UPPER L (FT.)	LOWER L (FT.)	L (FT.)
4	21	9	5	3	17	3	47
6	30	13	6	3	23	4	66
8	38	16	8	4	30	6	86
10	45	19	9	5	36	7	103
12	53	22	11	6	43	8	121
14	61	26	13	6	50	9	140
16	66	28	14	7	55	10	154
18	73	30	15	8	60	11	170
20	79	33	16	8	66	12	186
24	79	33	16	8	77	15	185
30	93	39	19	10	97	17	222
36	106	39	21	11	107	20	257
42	117	49	24	12	120	24	289
48	144	53	26	13	133	26	321

REDUCERS	
SIZE (IN.)	L (FT.)
6x4	34
8x6	36
8x4	62
10x8	35
10x6	63
12x10	36
12x8	64
16x12	66
16x10	92
20x18	35
20x16	66
20x12	117
24x20	56
24x18	80
24x16	101
30x24	78
30x20	121
36x30	78
36x24	141
42x36	75
42x30	140
48x42	75
48x36	139

TEES SEE NOTE 5		
RUN SIZE (IN.)	BRANCH SIZE (IN.)	L (FT.)
4	4	F.O.
4	6	10
	4 < LESS	F.O.
8	8	29
	6 < LESS	F.O.
10	10	45
	8	13
	6 < LESS	F.O.
12	12	62
	10	32
	8 < LESS	F.O.
16	16	94
	12	39
	10	5
	10 < LESS	F.O.
20	20	125
	16	76
	12	14
	10 < LESS	F.O.
24	24	124
	20	84
	16	36
	12 < LESS	F.O.
30	30	159
	24	104
	20	60
	16	5
	16 < LESS	F.O.
36	36	192
	30	142
	24	83
	20	33
	16 < LESS	F.O.
42	42	223
	36	178
	30	124
	24	59
	20	5
	16 < LESS	F.O.
48	48	253
	42	209
	36	162
	30	104
	24	34
	20 < LESS	F.O.

F.O. = FITTING ONLY

PVC PIPE RESTRAINT NOTES:

1. THIS SCHEDULE SHALL BE UTILIZED ON ALL WATER, SEWER FORCE MAIN OR RECLAIMED WATER SYSTEMS. ALL FITTINGS SHALL BE RESTRAINED TO LENGTHS INDICATED ON THE ABOVE SCHEDULE, AT A MINIMUM.
2. ASSUMPTIONS: PVC PIPE, SAFETY FACTOR=1.5, TEST PRESSURE=150PSI, SOIL=GM OR SM, TRENCH TYPE 3, DEPTH OF COVER=30 INCHES FOR 20" AND SMALLER PIPE SIZE OR 36 INCHES FOR 24" AND LARGER PIPE SIZE.
3. BENDS AND VALVES: SHALL BE RESTRAINED ON EACH SIDE OF FITTING.
4. VERTICAL OFFSETS: ARE APPROX. 3 FEET COVER ON TOP AND APPROX. 8 FEET COVER ON BOTTOM. PER THE DETAILS, Lu IS THE RESTRAINED LENGTH FOR THE UPPER (TOP) LEVEL. Li IS THE RESTRAINED LENGTH FOR THE LOWER (DEEPER) LEVEL. ASSUME 45 DEGREE BENDS.
5. TEES: TOTAL LENGTH BETWEEN FIRST JOINTS OR RESTRAINED LENGTH ON EITHER SIDE OF TEE (RUN) SHALL BE A TOTAL DISTANCE OF 30 FEET (MIN). SEE SCHEDULE ABOVE FOR RESTRAINT LENGTH ON TEE "BRANCH" LINE.
6. HDPE TO PVC TRANSITIONS: THE PVC PIPE SIDE SHALL BE RESTRAINED 35 FT (MIN).
7. THE INSTALLATION OF BELL HARNESS RESTRAINTS AT PVC JOINTS (DR-18 & 25 PIPE) SHALL BE COMPLETED PER THE MANUFACTURERS RECOMMENDATION, WHICH INCLUDES NOT OVER TIGHTENING THE PARALLEL RODS/NUTS. THESE NUTS SHOULD ONLY BE SNUG TIGHT. THE HOME MARKS ON THE PIPE SHOULD ALWAYS BE VISIBLE AFTER THE RESTRAINT IS INSTALLED. OVERHOMING THE JOINT MAY CAUSE A FAILURE AT THE BELL RESULTING IN A SERVICE OUTAGE.

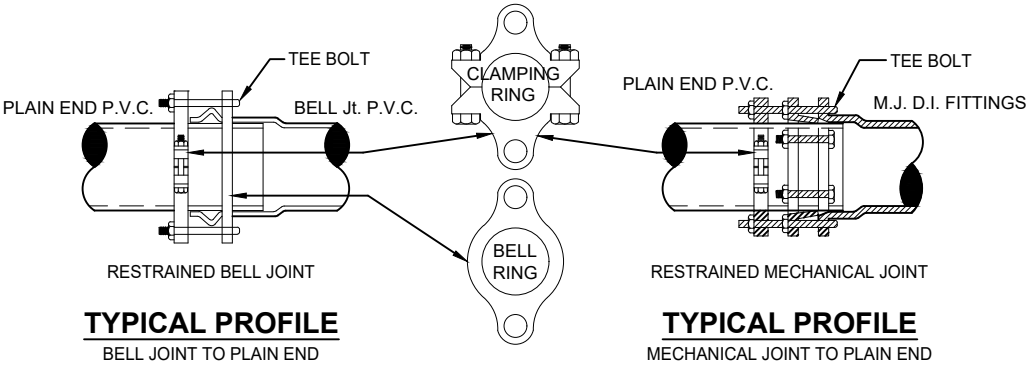

TYPICAL PROFILE

BELL JOINT TO PLAIN END
W/MECHANICAL RESTRAINERS

SECTION

TYPICAL PROFILE

MECHANICAL JOINT TO PLAIN END
W/MECHANICAL RESTRAINERS

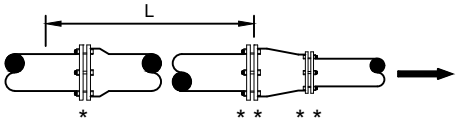

REDUCER

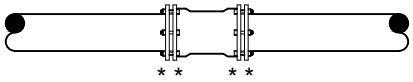

MECHANICAL JOINT SLEEVES

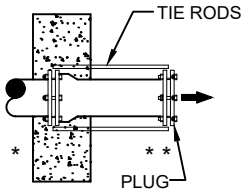

NO. OF TIE RODS REQUIRED

3" - 8"	DIAMETER MAIN - 2 TIE RODS REQUIRED PER JOINT (3/4" ROD)
10" - 12"	DIAMETER MAIN - 4 TIE RODS REQUIRED PER JOINT (3/4" ROD)
14" - 16"	DIAMETER MAIN - 6 TIE RODS REQUIRED PER JOINT (3/4" ROD)
18" - 20"	DIAMETER MAIN - 8 TIE RODS REQUIRED PER JOINT (3/4" ROD)
24"	DIAMETER MAIN - 12 TIE RODS REQUIRED PER JOINT (3/4" ROD)
30" - 36"	DIAMETER MAIN - 14 TIE RODS REQUIRED PER JOINT (1" ROD)
42" - 48"	DIAMETER MAIN - 16 TIE RODS REQUIRED PER JOINT (1 1/4" ROD)
54"	DIAMETER MAIN - 18 TIE RODS REQUIRED PER JOINT (1 1/4" ROD)

DEAD - END THRUST COLLAR ANCHOR

TO BE USED INSTEAD OF TOTAL RESTRAINED LENGTH (OPTIONAL) SIZE
AS PER THRUST BLOCK DETAIL (W-38). SEE DETAILS W-36 & W-37.

GENERAL NOTE:

1. PAY ITEM " * " DENOTES A RESTRAINT WHICH IS PAID FOR ON A PER EACH BASIS.
2. PAY ITEM " ** " DENOTES A RESTRAINT WHICH IS INCLUDED IN THE UNIT PRICE BID FOR FITTING OR VALVE.
3. ➡ INDICATES DIRECTION OF THRUST FORCE.

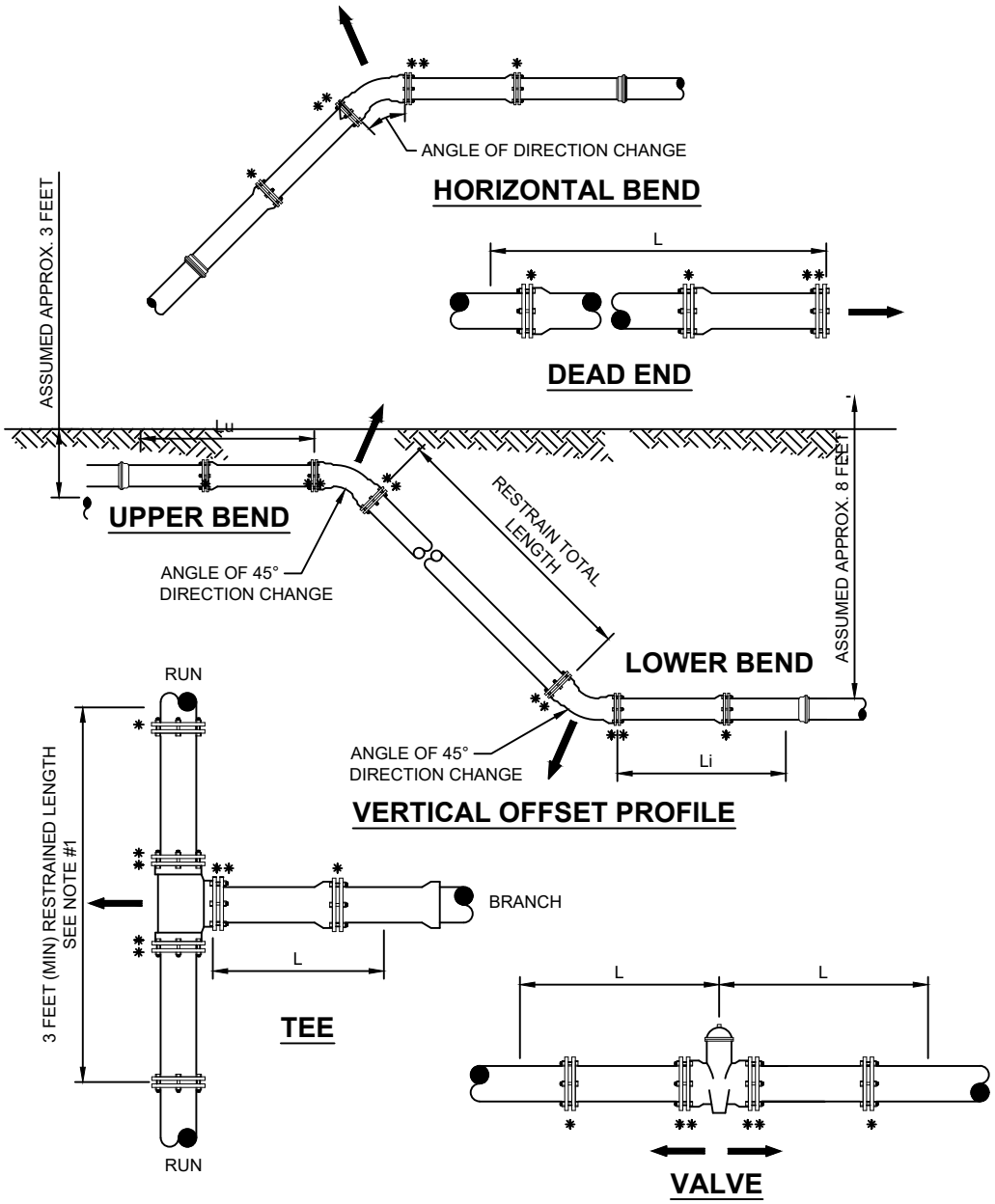

NOTES:

1. TOTAL LENGTH BETWEEN FIRST JOINTS OR RESTRAINED LENGTH ON EITHER SIDE OF TEE (RUN) SHALL BE A TOTAL DISTANCE OF 6 FEET (MIN.). THE PROJECT ENGINEER CAN INCREASE THIS LENGTH TO REDUCE THE NUMBER OF RESTRAINS REQUIRED. ANY CHANGES TO THIS TABLE MUST BE SUMMITTED TO JEA FOR APPROVAL.
2. PAY ITEM "*" DENOTES A RESTRAINT WHICH IS PAID FOR ON A PER EACH BASIC.
3. PAY ITEM "**" DENOTES A RESTRAINT WHICH IS INCLUDED IN THE UNIT PRICE BID FOR FITTING OR VALVE.

PLUGGED DEAD END USING TIE RODS

PLATE S-43

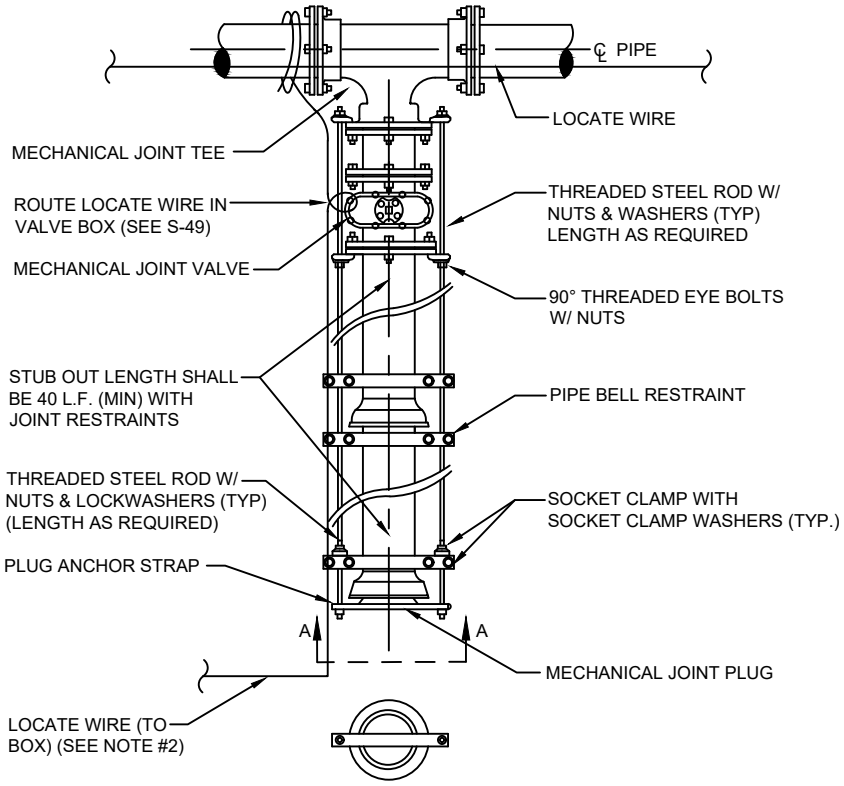

SECTION "A-A"

NOTES:

1. IN LIEU OF BELL/ROD RESTRAINTS, MECHANICAL JOINT RESTRAINTS MAY BE USED.

2. LOCATING WIRE REQUIRED, UTILIZING A LOCATE WIRE BOX INSTALLED AT PLUG LOCATION.

3. NUMBER OF TIE RODS REQUIRED IS AS FOLLOWS:

3" - 8"	DIAMETER MAIN - 2 TIE RODS REQUIRED PER JOINT (3/4" ROD)
10" - 12"	DIAMETER MAIN - 4 TIE RODS REQUIRED PER JOINT (3/4" ROD)
14" - 16"	DIAMETER MAIN - 6 TIE RODS REQUIRED PER JOINT (3/4" ROD)
18" - 20"	DIAMETER MAIN - 8 TIE RODS REQUIRED PER JOINT (3/4" ROD)
24"	DIAMETER MAIN -12 TIE RODS REQUIRED PER JOINT (3/4" ROD)
30" - 36"	DIAMETER MAIN -14 TIE RODS REQUIRED PER JOINT (1" ROD)
42" - 48"	DIAMETER MAIN -16 TIE RODS REQUIRED PER JOINT (1 1/4" ROD)
54"	DIAMETER MAIN -18 TIE RODS REQUIRED PER JOINT (1 1/4" ROD)

4. THE LOCATION OF THE DEAD END PLUG SHALL NOT BE UNDER PAVEMENT, IF POSSIBLE. THE STUB OUT SHALL EXTEND BEYOND THE INTERSECTION AREAS OR ROAD CROSSING BY 10 FEET (MIN.) WHERE POSSIBLE.

PLUGGED DEAD END USING MECHANICAL RESTRAINTS

PLATE S-44

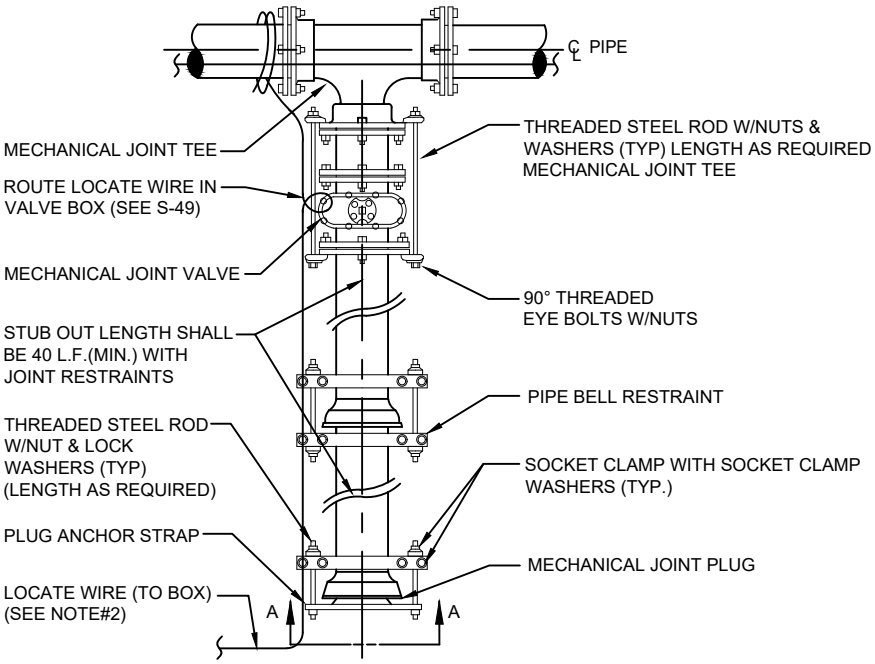

PLAN

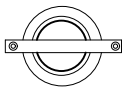

SECTION "A-A"

NOTES:

1. IN LIEU OF BELL/ROD RESTRAINTS, MECHANICAL JOINT RESTRAINTS MAY BE USED.

2. LOCATING WIRE REQUIRED, UTILIZING A LOCATE WIRE BOX INSTALLED AT PLUG LOCATION.

3. NUMBER OF TIE RODS REQUIRED IS AS FOLLOWS:

3" - 8"	DIAMETER MAIN - 2 TIE RODS REQUIRED PER JOINT (3/4" ROD)
10" - 12"	DIAMETER MAIN - 4 TIE RODS REQUIRED PER JOINT (3/4" ROD)
14" - 16"	DIAMETER MAIN - 6 TIE RODS REQUIRED PER JOINT (3/4" ROD)
18" - 20"	DIAMETER MAIN - 8 TIE RODS REQUIRED PER JOINT (3/4" ROD)
24"	DIAMETER MAIN -12 TIE RODS REQUIRED PER JOINT (3/4" ROD)
30" - 36"	DIAMETER MAIN -14 TIE RODS REQUIRED PER JOINT (1" ROD)
42" - 48"	DIAMETER MAIN -16 TIE RODS REQUIRED PER JOINT (1 1/4" ROD)
54"	DIAMETER MAIN -18 TIE RODS REQUIRED PER JOINT (1 1/4" ROD)

4. THE LOCATION OF THE DEAD END PLUG SHALL NOT BE UNDER PAVEMENT, IF POSSIBLE. THE STUB OUT SHALL EXTEND BEYOND THE INTERSECTION AREAS OR ROAD CROSSING BY 10 FEET (MIN.) WHERE POSSIBLE.

THRUST BLOCK SIZE CHART

PLATE S-45

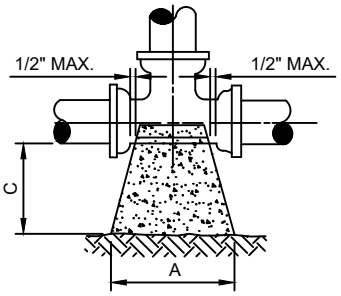

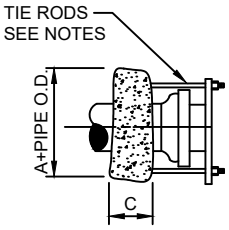

* HEIGHT = B + PIPE O.D.

THRUST BLOCK FOR TEES & PLUGS				
SIZE	90° BEND			S.F. BEARING SURFACE
	A	B	C	
4"	16"	16"	18"	1.78
6"	20"	24"	18"	3.33
8"	26"	32"	18"	5.78
10"	32"	40"	18"	8.89
12"	36"	48"	24"	12.00
14"	40"	56"	24"	15.56
16"	48"	60"	24"	20.00
18"	56"	64"	24"	24.89
20"	60"	76"	24"	31.67
24"	72"	90"	24"	45.00
30"	86"	102"	24"	60.67
36"	116"	108"	24"	86.11

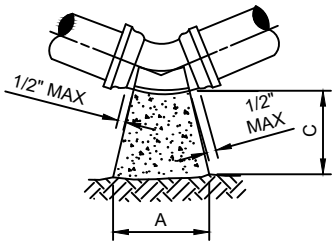

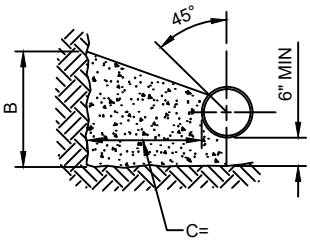

24" MIN - 12" & LARGER PIPE
18" MIN - 10" & SMALLER PIPE

THRUST BLOCK FOR BENDS																
SIZE	90° BEND			S.F. BEARING SURFACE	45° BEND			S.F. BEARING SURFACE	22-1/2° BEND			S.F. BEARING SURFACE	11-1/4° BEND			S.F. BEARING SURFACE
	A	B	C		A	B	C		A	B	C		A	B	C	
4"	16"	16"	18"	1.78	14"	16"	18"	1.56	14"	16"	18"	1.56	14"	16"	18"	1.56
6"	22"	32"	18"	4.89	16"	18"	18"	2.00	14"	16"	18"	1.56	14"	16"	18"	1.56
8"	32"	36"	18"	8.00	24"	28"	18"	4.67	16"	18"	18"	2.00	14"	16"	18"	1.56
10"	36"	46"	18"	11.50	26"	36"	18"	6.50	20"	24"	18"	3.33	14"	18"	18"	1.75
12"	44"	56"	24"	17.11	32"	40"	24"	8.89	24"	30"	24"	5.00	16"	20"	24"	2.22
14"	52"	62"	24"	22.39	36"	48"	24"	12.00	26"	36"	24"	6.50	20"	24"	24"	3.33
16"	58"	72"	24"	29.00	40"	54"	24"	15.00	32"	38"	24"	8.44	22"	26"	24"	3.97
18"	64"	80"	24"	35.56	46"	60"	24"	19.17	36"	42"	24"	10.50	24"	32"	24"	5.33
20"	72"	88"	24"	44.00	52"	66"	24"	23.83	38"	48"	24"	12.67	26"	36"	24"	6.50
24"	96"	96"	24"	36.89	64"	78"	24"	34.67	46"	56"	24"	17.89	32"	40"	24"	8.89
30"	122"	102"	24"	86.11	72"	94"	24"	47.00	56"	62"	24"	24.11	36"	48"	24"	12.00
36"	166"	104"	24"	123.33	88"	108"	24"	66.00	64"	78"	24"	34.67	44"	54"	24"	16.50

NOTES:

1. ALL BEARING SURFACES TO BE CARRIED TO UNDISTURBED SOIL.
2. THESE TABLES SHOW MINIMUM SIZES FOR THRUST BLOCKS IN GOOD SOIL (A-1 THRU A-3, CLEAN SANDS AND GRAVELS) WITH MINIMUM BEARING CAPACITY OF 2000 psi.
3. POOR SOILS A-4 THRU A-8, SILTY SOILS, CLAYS, MUCK AND PEAT WILL REQUIRE LARGER THRUST BLOCKING.
4. BOTH CONCRETE THRUST BLOCKS AND TIE RODS MUST BE USED WHEN, IN THE JUDGEMENT OF THE ENGINEER, THE NATURE AND CRITICALITY OF AN INSTALLATION IS SUCH AS TO REQUIRE POSITIVE ASSURANCE OF STABILITY.
5. THE USE OF THRUST BLOCKS SHALL BE LIMITED TO SITUATIONS SUCH AS POINT REPAIR WHERE EXPOSING SEVERAL JOINTS OF PIPE IS NOT FEASIBLE DUE TO EXISTING GROUND CONDITIONS.
6. CONCRETE COLLARS WITH TIE RODS MAY BE USED ON DEAD END LINES AT THE CONTRACTOR'S DISCRETION. NUMBER OF TIE RODS REQUIRED IS AS FOLLOWS:
   - 3" - 8" DIAMETER MAIN - 2 TIE RODS REQUIRED PER JOINT (3/4" ROD)
   - 10" - 12" DIAMETER MAIN - 4 TIE RODS REQUIRED PER JOINT (3/4" ROD)
   - 14" - 16" DIAMETER MAIN - 6 TIE RODS REQUIRED PER JOINT (3/4" ROD)
   - 18" - 20" DIAMETER MAIN - 8 TIE RODS REQUIRED PER JOINT (3/4" ROD)
   - 24" DIAMETER MAIN -12 TIE RODS REQUIRED PER JOINT (3/4" ROD)
   - 30" - 36" DIAMETER MAIN -14 TIE RODS REQUIRED PER JOINT (1" ROD)
   - 42" - 48" DIAMETER MAIN -16 TIE RODS REQUIRED PER JOINT (1 1/4" ROD)
   - 54" DIAMETER MAIN -18 TIE RODS REQUIRED PER JOINT (1 1/4" ROD)
7. MAXIMUM TEST PRESSURE TO BE 150 PSI.

HORIZONTAL & VERTICAL SEPARATION REQUIREMENTS

	PROPOSED UTILITY											
	POTABLE WATER			WASTEWATER GRAVITY AND FORCE MAIN			RECLAIMED WATER			VACUUM SEWERS		
CONFLICTING UTILITY	HORIZ.	VERT.	JOINT SPACING*	HORIZ.	VERT.	JOINT SPACING*	HORIZ.	VERT.	JOINT SPACING*	HORIZ.	VERT.	JOINT SPACING*
POTABLE WATER	3' NOTE 1	12"	3' NOTE 2	6' to 10'	12" NOTE 5	6' NOTE 2	3'	12"	6' NOTE 2	3' to 10'	12"	3' NOTE 2
RECLAIMED WATER	3'	12"	6' NOTE 2	3' NOTE 1	12"	3' NOTE 2	3'	12"	6' NOTE 2	3' NOTE 1	12"	3' NOTE 2
WASTEWATER (GRAVITY AND FORCE MAIN)	6' to 10'	12"	6' NOTE 2	3' NOTE 1	12"	6"	3' NOTE 1	12"	3' NOTE 2	3' NOTE 1	12"	3' NOTE 2
VACUUM SEWERS	3' to 10'	12"	3' NOTE 2	3' NOTE 1	12"	6"	3' NOTE 1	12"	3' NOTE 2	3' NOTE 1	12"	3' NOTE 2
RIGHT OF WAYS	3' NOTE 1	N/A	N/A	3' NOTE 1	N/A	N/A	3' NOTE 1	N/A	N/A	3' NOTE 1	N/A	N/A
PERMANENT STRUCTURES (BUILDINGS, SIGNS, POLES, ETC.)	SEE NOTE 7	N/A	N/A	SEE NOTE 7	N/A	N/A	SEE NOTE 7	N/A	N/A	SEE NOTE 7	N/A	N/A
STORM SEWERS	3' NOTE 1	12"	3' NOTE 2	3' NOTE 1	12"	3' NOTE 2	3' NOTE 1	12"	3' NOTE 2	3' NOTE 1	12"	3' NOTE 2
GAS	3' NOTE 1	12"	3' NOTE 2	3' NOTE 1	12"	3' NOTE 2	3' NOTE 1	12"	3' NOTE 2	3' NOTE 1	12"	3' NOTE 2
TREES	3'-6' NOTE 6	N/A	N/A	3'-6' NOTE 6	N/A	N/A	3'-6' NOTE 6	N/A	N/A	3'-6' NOTE 6	N/A	N/A
ALL OTHER UTILITIES	3' NOTE 1	12"	3' NOTE 2	3' NOTE 1	12"	3' NOTE 2	3' NOTE 1	12"	3' NOTE 2	3' NOTE 1	12"	3' NOTE 2

NOTES:

1. THIS SEPARATION REQUIREMENT IS TO PROVIDE ACCESSIBILITY FOR CONSTRUCTION AND MAINTENANCE. THREE FEET OF HORIZONTAL SEPARATION IS THE MINIMUM FOR PIPES WITH THREE FEET OF COVER. FOR PIPES INSTALLED AT GREATER DEPTH, PROVIDE AN ADDITIONAL FOOT OF SEPARATION FOR EACH ADDITIONAL FOOT OF DEPTH.
2. THE MINIMUM JOINT SPACING REQUIRED FROM CROSSING FROM OTHER UTILITIES WHILE STILL MAINTAINING MINIMUM VERTICAL SEPARATION.
3. DISTANCES GIVEN ARE FROM OUTSIDE OF PIPE TO OUTSIDE OF PIPE.
4. NO WATER PIPE SHALL PASS THROUGH OR COME INTO CONTACT WITH ANY PART OF SANITARY OR STORM WATER MANHOLE OR STRUCTURES.
5. WATER MAIN SHOULD CROSS ABOVE OTHER PIPES WHENEVER POSSIBLE. WHEN WATER MAIN MUST BE BELOW OTHER UTILITY PIPING, THE MINIMUM SEPARATION SHALL BE 12 INCHES.
6. REFER TO SECTION 429, III.4.3.
7. REFER TO SECTION 429, III.4.2 FOR MINIMUM SEPARATION REQUIREMENTS FROM PIPE TO STRUCTURES.

WATER MAIN AND NON-WATER MAIN SEPARATION REQUIREMENTS - NOTES

1. IT IS REQUIRED THAT “WATER MAINS” BE INSTALLED, CLEANED, DISINFECTED AND HAVE A SATISFACTORY BACTERIOLOGICAL SURVEY PERFORMED IN ACCORDANCE WITH THE LATEST APPLICABLE AWWA STANDARDS, CHAPTER 62-555, F.A.C. AND LATEST JEA WATER AND SEWER STANDARDS. FOR THE PURPOSE OF THIS SECTION, THE PHRASE “WATER MAINS” SHALL MEAN MAINS, INCLUDING TREATMENT PLANT PROCESS PIPING, CONVEYING EITHER RAW, PARTIALLY TREATED, OR FINISHED DRINKING WATER; FIRE HYDRANT LEADS; AND SERVICE LINES THAT HAVE AN INSIDE DIAMETER OF THREE (3) INCHES OR GREATER. IN ADDITION, THE PHRASE “RECLAIMED WATER” REFERS TO THE WATER REGULATED UNDER PART III OF CHAPTER 62-610, F.A.C.

2. NEW OR RELOCATED, UNDERGROUND WATER MAINS SHALL BE LAID TO PROVIDE A HORIZONTAL DISTANCE OF AT LEAST THREE (3) FEET BETWEEN THE OUTSIDE OF THE WATER MAIN AND THE OUTSIDE OF ANY EXISTING OR PROPOSED STORM SEWER, STORMWATER FORCE MAIN, OR PIPELINE CONVEYING RECLAIMED WATER.

3. NEW OR RELOCATED, UNDERGROUND WATER MAINS SHALL BE LAID TO PROVIDE A HORIZONTAL DISTANCE OF AT LEAST SIX (6) FEET, AND PREFERABLY TEN (10) FEET, BETWEEN THE OUTSIDE OF THE WATER MAIN AND THE OUTSIDE OF ANY EXISTING OR PROPOSED GRAVITY OR PRESSURE-TYPE SANITARY SEWER, WASTEWATER FORCE MAIN, OR PIPELINE CONVEYING RECLAIMED WATER. THE MINIMUM HORIZONTAL SEPARATION DISTANCE BETWEEN WATER MAINS AND GRAVITY-TYPE SANITARY SEWERS MAY BE REDUCED TO THREE (3) FEET WHERE THE BOTTOM OF THE WATER MAIN IS LAID AT LEAST SIX (6) INCHES ABOVE THE TOP OF THE SEWER (SPECIAL CASE).

4. NEW OR RELOCATED, UNDERGROUND WATER MAINS CROSSING ANY EXISTING OR PROPOSED GRAVITY OR VACUUM-TYPE SANITARY SEWER OR STORM SEWER SHALL BE LAID SO THE OUTSIDE OF THE WATER MAIN IS AT LEAST SIX (6) INCHES, AND PREFERABLE TWELVE (12) INCHES, ABOVE OR AT LEAST TWELVE (12) INCHES BELOW THE OUTSIDE OF THE OTHER PIPELINE. HOWEVER, IT IS PREFERABLE TO LAY THE WATER MAIN ABOVE THE OTHER PIPELINE.

5. NEW OR RELOCATED, UNDERGROUND WATER MAINS CROSSING ANY EXISTING OR PROPOSED PRESSURE-TYPE SANITARY SEWER, WASTEWATER OR STORMWATER FORCE MAIN, OR PIPELINE CONVEYING RECLAIMED WATER SHALL BE LAID SO THE OUTSIDE OF THE WATER MAIN IS A LEAST TWELVE (12) INCHES ABOVE OR BELOW THE OUTSIDE OF THE OTHER PIPELINE. HOWEVER, IT IS PREFERABLE TO LAY THE WATER MAIN ABOVE THE OTHER PIPELINE.

6. AT THE UTILITY CROSSINGS DESCRIBED IN NOTES 4 AND 5 ABOVE, ONE FULL LENGTH OF WATER MAIN PIPE SHALL BE CENTERED ABOVE OR BELOW THE OTHER PIPELINE SO THE WATER MAIN JOINTS WILL BE AS FAR AS POSSIBLE FROM THE OTHER PIPELINE. ALTERNATIVELY, AT SUCH CROSSINGS, THE PIPES SHALL BE ARRANGED SO THAT ALL WATER MAIN JOINTS ARE AT LEAST THREE (3) FEET FROM ALL JOINTS IN VACUUM-TYPE SANITARY SEWERS, STORM SEWERS, STORMWATER FORCE MAINS, OR PIPELINES CONVEYING RECLAIMED WATER, AND AT LEAST SIX (6) FEET FROM ALL JOINTS IN GRAVITY OR PRESSURE-TYPE SANITARY SEWERS, WASTEWATER FORCE MAINS, OR PIPELINE CONVEYING RECLAIMED WATER.

7. NEW OR RELOCATED FIRE HYDRANTS SHALL BE LOCATED SO THAT THE HYDRANTS ARE AT LEAST THREE (3) FEET FROM ANY EXISTING OR PROPOSED STORM SEWER, STORMWATER FORCE MAIN, OR PIPELINE CONVEYING RECLAIMED WATER; AT LEAST THREE (3) FEET, AND PREFERABLY TEN (10) FEET, FROM ANY EXISTING OR PROPOSED VACUUM-TYPE SANITARY SEWER; AT LEAST SIX (6) FEET, AND PREFERABLY TEN (10) FEET, FROM ANY EXISTING OR PROPOSED GRAVITY OR PRESSURE-TYPE SANITARY SEWER OR WASTEWATER FORCE MAIN.

8. WHERE AN UNDERGROUND WATER MAIN IS BEING LAID LESS THAN THE REQUIRED MINIMUM HORIZONTAL DISTANCE FROM ANOTHER PIPELINE AND WHERE AN UNDERGROUND WATER MAIN IS CROSSING ANOTHER PIPELINE AND JOINTS IN THE WATER MAIN ARE BEING LOCATED LESS THAN THE REQUIRED MINIMUM DISTANCE FROM JOINTS IN THE OTHER PIPELINE, THE CONTRACTOR SHALL CONSULT THE DESIGN ENGINEER TO OBTAIN APPROVAL OF ANY ALTERNATIVE CONSTRUCTION METHODS, PRIOR TO CONSTRUCTION.

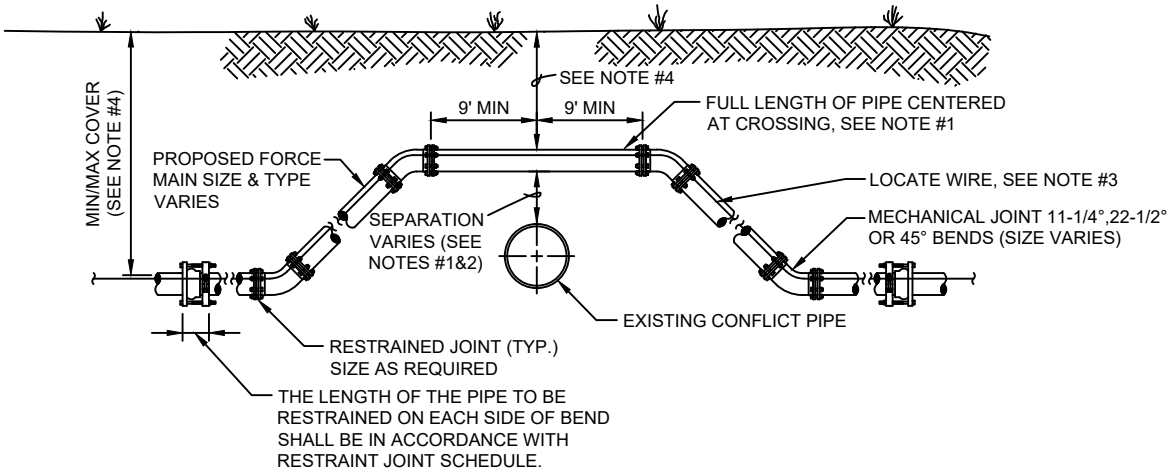

CASE "A" CROSSING

NOTES:

1. IF EXISTING CONFLICT PIPE IS A WATER OR RECLAIMED WATER MAIN, 12-INCHES OF SEPARATION IS REQUIRED. A FULL LENGTH OF PIPE SHALL BE CENTERED OVER EXISTING UTILITY MAIN TO PROVIDE MAXIMUM JOINT SPACING FOR ALL CROSSINGS.
2. FOR OTHER LOCATION LIMITATIONS SEE DETAIL (S-26 & S-27).
3. LOCATING WIRE REQUIRED: SEE DETAIL S-49.
4. THE COVER FOR PIPING LESS THAN 24" SIZE SHALL BE 30" (MIN) IN UNPAVED AREAS, 36" (MIN) IN PAVED AREAS AND A MAXIMUM COVER OF 60", UNLESS PRE-APPROVED BY JEA. THE COVER FOR PIPING 24" SIZE AND LARGER SHALL BE 36" (MIN) IN PAVED AND UNPAVED AREAS AND A MAXIMUM COVER OF 84", UNLESS APPROVED BY JEA.
5. THE SOILS BETWEEN THE MAIN AND THE CONFLICT PIPE SHALL BE COMPACTED TO 98% OF THE MAXIMUM DENSITY AS DETERMINED BY THE LABORATORY MODIFIED PROCTOR TEST ASTM D 1557.

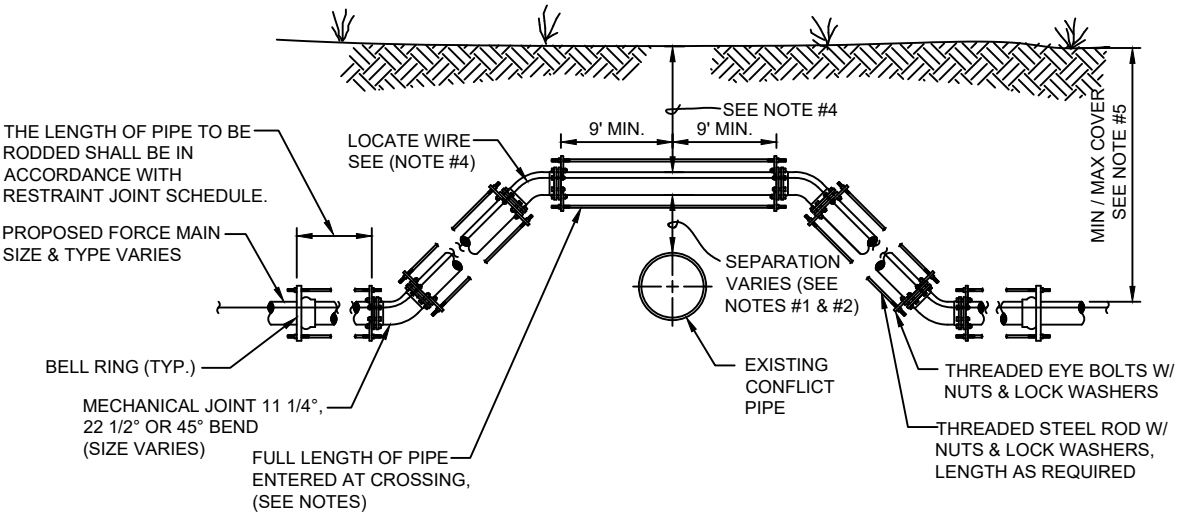

CASE "A" CROSSING

NOTES:

1. IF EXISTING CONFLICT PIPE IS A WATER MAIN12-INCHES OF SEPARATION IS REQUIRED. A FULL LENGTH OF PIPE SHALL BE CENTERED OVER EXISTING UTILITY MAIN TO PROVIDE MAXIMUM JOINT SPACING FOR ALL CROSSINGS.

2. FOR OTHER LOCATION LIMITATIONS SEE DETAIL (S-26 & S-27).

3. NUMBER OF TIE RODS REQUIRED IS AS FOLLOWS:

3" - 8"	DIAMETER MAIN - 2 TIE RODS REQUIRED PER JOINT (3/4" ROD)
10" - 12"	DIAMETER MAIN - 4 TIE RODS REQUIRED PER JOINT (3/4" ROD)
14" - 16"	DIAMETER MAIN - 6 TIE RODS REQUIRED PER JOINT (3/4" ROD)
18" - 20"	DIAMETER MAIN - 8 TIE RODS REQUIRED PER JOINT (3/4" ROD)
24"	DIAMETER MAIN -12 TIE RODS REQUIRED PER JOINT (3/4" ROD)
30" - 36"	DIAMETER MAIN -14 TIE RODS REQUIRED PER JOINT (1" ROD)
42" - 48"	DIAMETER MAIN -16 TIE RODS REQUIRED PER JOINT (1 1/4" ROD)
54"	DIAMETER MAIN -18 TIE RODS REQUIRED PER JOINT (1 1/4" ROD)

4. LOCATING WIRE REQUIRED: SEE DETAIL S-49.

5. THE COVER FOR PIPING LESS THAN 24" SIZE SHALL BE 30" (MIN) IN UNPAVED AREAS, 36" (MIN) IN PAVED AREAS AND A MAXIMUM COVER OF 60", UNLESS PRE-APPROVED BY JEA. THE COVER FOR PIPING 24" SIZE AND LARGER SHALL BE 36" (MIN) IN PAVED AND UNPAVED AREAS AND A MAXIMUM COVER OF 84", UNLESS APPROVE BY JEA.

6. THE SOILS BETWEEN THE MAIN AND THE CONFLICT PIPE SHALL BE COMPACTED TO 98% OF THE MAXIMUM DENSITY AS DETERMINED BY THE LABORATORY MODIFIED PROCTOR TEST ASTM D 1557.

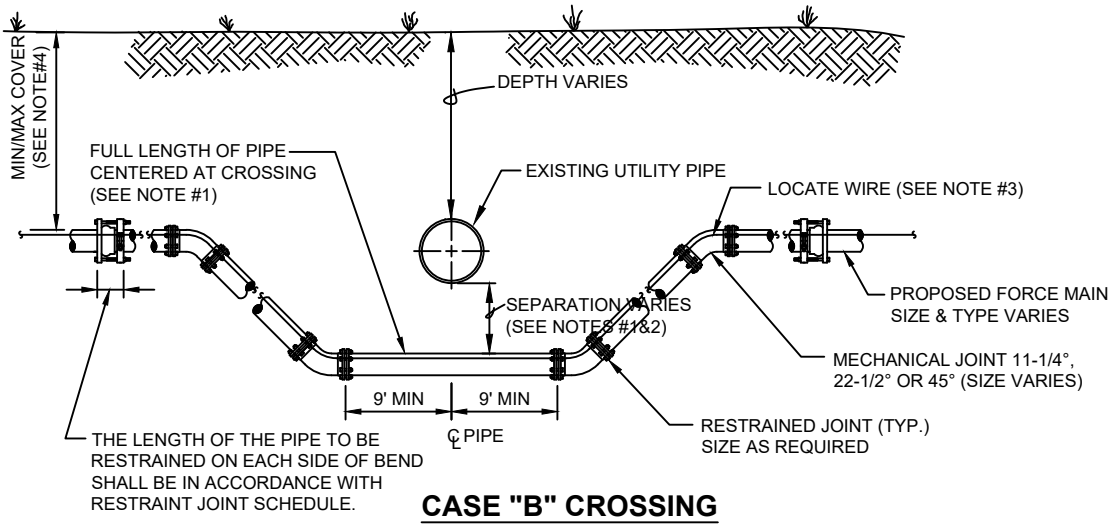

CASE "B" CROSSING

NOTES:

1. IF EXISTING CONFLICT PIPE IS A WATER OR RECLAIMED WATER MAIN, 12-INCHES OF SEPARATION IS REQUIRED.A FULL LENGTH OF PIPE SHALL BE CENTERED OVER EXISTING UTILITY MAIN TO PROVIDE MAXIMUM JOINT SPACING FOR ALL CROSSINGS.
2. FOR OTHER LOCATION LIMITATIONS SEE DETAIL (S-26 & S-27).
3. LOCATING WIRE REQUIRED: SEE DETAIL S-49.
4. THE COVER FOR PIPING LESS THAN 24" SIZE SHALL BE 30" (MIN) IN UNPAVED AREAS, 36" (MIN) IN PAVED AREAS AND A MAXIMUM COVER OF 60", UNLESS PRE-APPROVED BY JEA. THE COVER FOR PIPING 24" SIZE AND LARGER SHALL BE 36" (MIN) IN PAVED AND UNPAVED AREAS AND A MAXIMUM COVER OF 84", UNLESS APPROVED BY JEA.
5. THE SOILS BETWEEN THE MAIN AND THE CONFLICT PIPE SHALL BE COMPACTED TO 98% OF THE MAXIMUM DENSITY AS DETERMINED BY THE LABORATORY MODIFIED PROCTOR TEST ASTM D 1557.

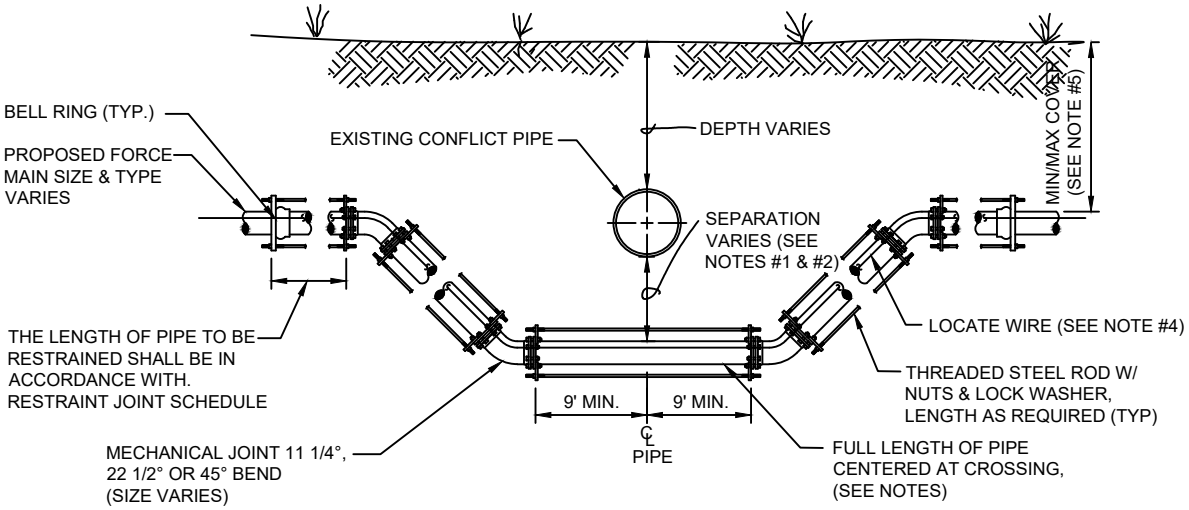

CASE "B" CROSSING

NOTES:

1. IF EXISTING CONFLICT PIPE IS A WATER OR RECLAIM WATER MAIN, 12-INCHES OF SEPARATION IS REQUIRED. A FULL LENGTH OF PIPE SHALL BE CENTERED OVER EXISTING UTILITY MAIN TO PROVIDE MAXIMUM JOINT SPACING FOR ALL CROSSINGS.

2. FOR OTHER LOCATION LIMITATIONS SEE DETAIL (S-26 & S-27).

3. NUMBER OF TIE RODS REQUIRED IS AS FOLLOWS:

3" - 8"	DIAMETER MAIN - 2 TIE RODS REQUIRED PER JOINT (3/4" ROD)
10" - 12"	DIAMETER MAIN - 4 TIE RODS REQUIRED PER JOINT (3/4" ROD)
14" - 16"	DIAMETER MAIN - 6 TIE RODS REQUIRED PER JOINT (3/4" ROD)
18" - 20"	DIAMETER MAIN - 8 TIE RODS REQUIRED PER JOINT (3/4" ROD)
24"	DIAMETER MAIN -12 TIE RODS REQUIRED PER JOINT (3/4" ROD)
30" - 36"	DIAMETER MAIN -14 TIE RODS REQUIRED PER JOINT (1" ROD)
42" - 48"	DIAMETER MAIN -16 TIE RODS REQUIRED PER JOINT (1 1/4" ROD)
54"	DIAMETER MAIN -18 TIE RODS REQUIRED PER JOINT (1 1/4" ROD)

4. LOCATING WIRE REQUIRED: SEE DETAIL S-49.

5. THE COVER FOR PIPING LESS THAN 24" SIZE SHALL BE 30" (MIN) IN UNPAVED AREAS, 36" (MIN) IN PAVED AREAS AND A MAXIMUM COVER OF 60", UNLESS PRE-APPROVED BY JEA. THE COVER FOR PIPING 24" SIZE AND LARGER SHALL BE 36" (MIN) IN PAVED AND UNPAVED AREAS AND A MAXIMUM COVER OF 84", UNLESS APPROVE BY JEA.

6. THE SOILS BETWEEN THE MAIN AND THE CONFLICT PIPE SHALL BE COMPACTED TO 98% OF THE MAXIMUM DENSITY AS DETERMINED BY THE LABORATORY MODIFIED PROCTOR TEST. ASTM D 1557.

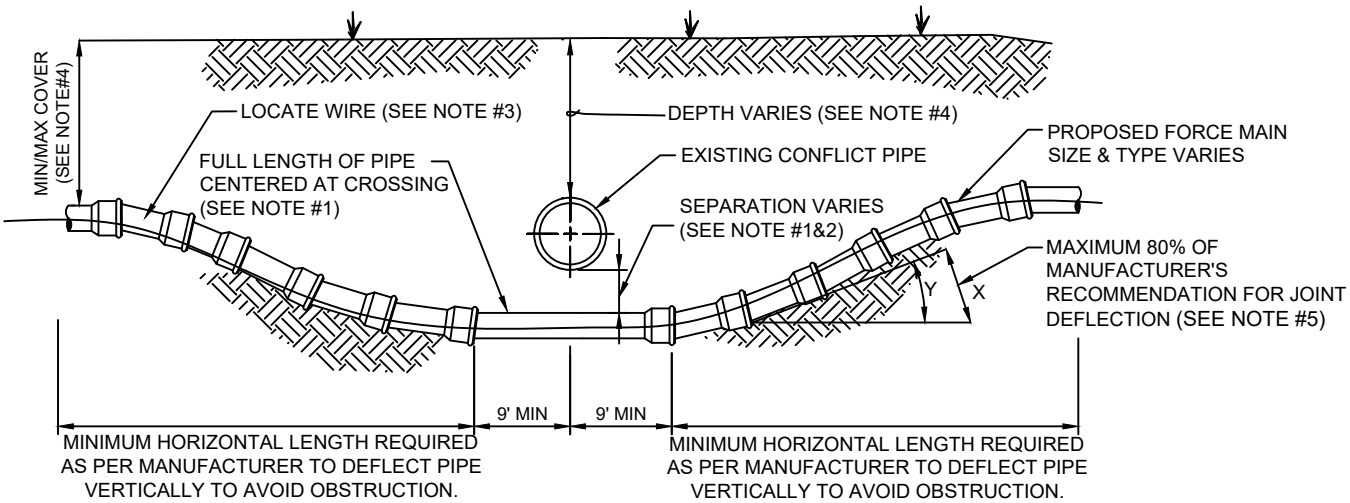

CASE "B" CROSSING

MAXIMUM ALLOWED OFFSET FOR PIPE BY JOINT DEFLECTION

PVC PIPE

PIPE SIZE (IN.)	(X) MAX. OFFSET (IN.)	(Y) ANGLE AT ONE BELL	RESULTING RADIUS OF CURVE WITH 20FT. LENGTHS
2	30	7°	158 FT
4	10	2.4°	480 FT
6	10	2.4°	480 FT
8	10	2.4°	480 FT
10	10	2.4°	480 FT
12	8.5	2°	564 FT
14 - 24	5	1.2°	960 FT
30 - 48	3.25	0.8°	1477 FT

NOTES:

1. IF EXISTING CONFLICT PIPE IS A WATER MAIN OR RECLAIM WATER MAIN, 12-INCHES OF SEPARATION IS REQUIRED. A FULL LENGTH OF PIPE SHALL BE CENTERED OVER EXISTING UTILITY MAIN TO PROVIDE MAXIMUM JOINT SPACING FOR ALL CROSSING.
2. FOR OTHER LOCATION LIMITATIONS SEE DETAIL (S-26 & S-27).
3. LOCATING WIRE REQUIRED: SEE DETAIL S-49.
4. THE COVER OVER ALL PIPING LESS THAN 24" SIZE SHALL BE A MINIMUM OF 30" IN UNPAVED AREAS AND 36" IN PAVED AREAS WITH A MAXIMUM COVER OF 60" UNLESS APPROVED OTHERWISE BY JEA. COVER FOR PIPING 24" SIZE AND LARGER SHALL BE MINIMUM OF 36" (PAVED AND UNPAVED) AND MAXIMUM OF 84" UNLESS APPROVED OTHERWISE BY JEA. THE SOILS BETWEEN THE NEW MAIN AND THE CONFLICT PIPE SHALL BE COMPACTED TO 98% OF THE MAXIMUM DENSITY AS DETERMINED BY THE LABORATORY MODIFIED PROCTOR TEST ASTM D 1557.
5. JEA ONLY ALLOWS 80% OF THE PIPE MANUFACTURER'S RECOMMENDATION FOR JOINT DEFLECTION. BENDING THE PIPE BARREL IS NOT ALLOWED. UNLESS OTHERWISE APPROVED BY JEA, THE MAXIMUM ARE LISTED IN TABLE BELOW. ONLY MANUAL FORCE CAN BE UTILIZED TO OBTAIN THESE JOINT DEFLECTION. ALL OFFSETS ARE BASED ON MINIMUM 20LF PIPE LENGTH.

ADJUSTMENT OVER EXISTING UTILITIES PIPE JOINT DEFLECTION

PLATE S-48

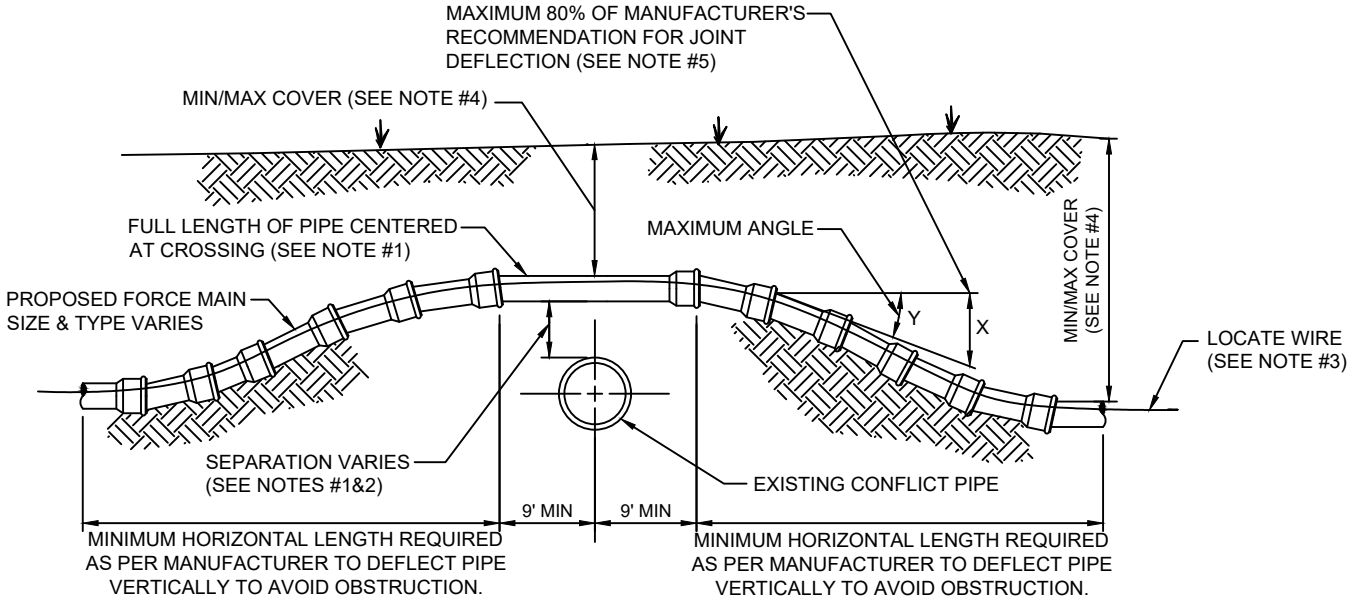

CASE "A" CROSSING

MAXIMUM ALLOWED OFFSET FOR PIPE BY JOINT DEFLECTION

PVC PIPE

PIPE SIZE (IN.)	(X) MAX. OFFSET (IN.)	(Y) ANGLE AT ONE BELL	RESULTING RADIUS OF CURVE WITH 20FT. LENGTHS
2	30	7°	158 FT
4	10	2.4°	480 FT
6	10	2.4°	480 FT
8	10	2.4°	480 FT
10	10	2.4°	480 FT
12	8.5	2°	564 FT
14 - 24	5	1.2°	960 FT
30 - 48	3.25	0.8°	1477 FT

NOTES:

1. IF EXISTING CONFLICT PIPE IS A WATER MAIN OR RECLAIM WATER MAIN, 12-INCHES OF SEPARATION IS REQUIRED. A FULL LENGTH OF PIPE SHALL BE CENTERED OVER EXISTING UTILITY MAIN TO PROVIDE MAXIMUM JOINT SPACING FOR ALL CROSSING.
2. FOR OTHER LOCATION LIMITATIONS SEE DETAIL (S-26 & S-27).
3. LOCATING WIRE REQUIRED: SEE DETAIL S-49.
4. THE COVER OVER ALL PIPING LESS THAN 24" SIZE SHALL BE A MINIMUM OF 30" IN UNPAVED AREAS AND 36" IN PAVED AREAS WITH A MAXIMUM COVER OF 60" UNLESS APPROVED OTHERWISE BY JEA. COVER FOR PIPING 24" SIZE AND LARGER SHALL BE MINIMUM OF 36" (PAVED AND UNPAVED) AND MAXIMUM OF 84" UNLESS APPROVED OTHERWISE BY JEA. THE SOILS BETWEEN THE NEW MAIN AND THE CONFLICT PIPE SHALL BE COMPACTED TO 98% OF THE MAXIMUM DENSITY AS DETERMINED BY THE LABORATORY MODIFIED PROCTOR TEST ASTM D 1557.
5. JEA ONLY ALLOWS 80% OF THE PIPE MANUFACTURER'S RECOMMENDATION FOR JOINT DEFLECTION. BENDING THE PIPE BARREL IS NOT ALLOWED. UNLESS OTHERWISE APPROVED BY JEA, THE MAXIMUM ARE LISTED IN TABLE BELOW. ONLY MANUAL FORCE CAN BE UTILIZED TO OBTAIN THESE JOINT DEFLECTION. ALL OFFSETS ARE BASED ON MINIMUM 20LF PIPE LENGTH.

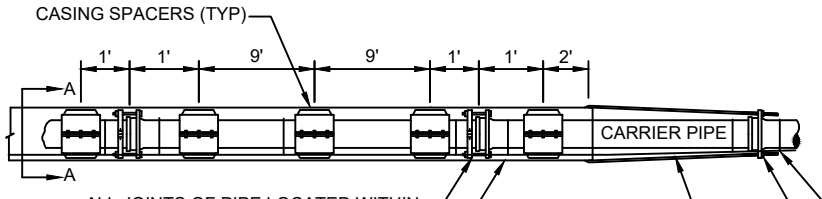

ELEVATION

PROVIDE COLD ROLLED STEEL TIE RODS FROM THE END OF THE STEEL CASING PIPE TO THE FIRST JOINT OF PIPE OUTSIDE THE CASING. THE RODS ARE TO BE WELDED TO THE CASING AND CONNECTED TO A BELL TYPE CLAMP ON THE PIPE. (TYPICAL EACH SIDE). SEE TABLE BELOW FOR THE MINIMUM NUMBER OF TIE RODS REQUIRED AT EACH END, TIE ROD SIZE AND QUANTITY.

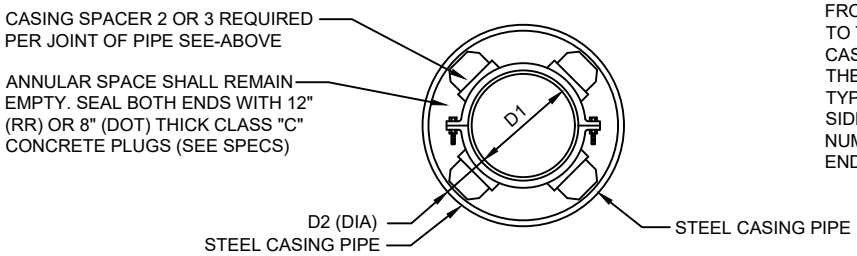

SECTION "A-A"

CARRIER TYPE AND CASING PIPE SIZES (MIN) IN INCHES														
CARRIER PIPE NO. DIA. (D_1)	4	6	8	10	12	14	16	18	20	24	30	36	42	48
CASING PIPE NOM. DIA. (D_2)	14	16	20	20	24	30	30	30	36	42	48	54	60	66
WALL THICKNESS RAILROAD-(FEC)	0.25	1.25	0.375	0.375	0.375	0.50	0.50	0.50	0.562	0.625	0.625	0.688	0.781	0.781
WALL THICKNESS RAILROAD-(CSX)	0.25	0.281	0.375	0.375	0.375	0.469	0.469	0.469	0.562	0.625	0.688	0.781	0.844	0.938
WALL THICKNESS DOT	0.25	0.25	0.25	0.25	0.25	0.312	0.312	0.312	0.375	0.50	0.50	0.50	0.50	0.50
NUMBER OF TIE RODS (EACH END)	2	2	2	4	4	6	6	8	8	12	14	14	16	16
TIE ROD SIZE (DIA.)	3/4"	3/4"	3/4"	3/4"	3/4"	3/4"	3/4"	3/4"	3/4"	3/4"	1"	1"	1 1/4"	1 1/4"

PIPE MAIN CROSSINGS FOR RAILROADS OR HIGHWAYS

NOTES:

1. MIN. COVER TO TOP OF CASING; a) FDOT-3.0' b)RAILROAD-5.5' TO BASE OF RAIL, 4.5' FOR SECONDARY OR INDUSTRIAL TRACKS. EXCEPT FOR F..E.C. (SEE NOTE 3)
2. THE INSIDE DIAMETER OF THE CASING PIPE SHALL BE A MINIMUM OF 4 INCHES GREATER THAN THE OUTSIDE DIAMETER OF THE CARRIER PIPE BELL OR COUPLING. HOWEVER, A MINIMUM OF 6 INCHES IS REQUIRED FOR FLORIDA EAST COAST R.R. CROSSINGS.
3. THE MINIMUM COVER FOR CASING UNDER FLORIDA EAST COAST RAILROAD SHALL BE 5.0 FEET BELOW THE BOTTOM OF TIES FOR ALL TRACKS.
4. ALL JOINTS WITHIN CARRIES PIPE SHALL BE MECHANICAL RESTRAINED JOINTS.
5. FOR STREET USES WHICH ARE NOT DOT OR RAILROAD, USE DOT CASING THICKNESS UNLESS OTHERWISE INDICATED BY ENGINEER.
6. CASING PIPE SHALL BE FURNISHED IN NOMINAL 8 FOOT LENGTHS (MIN.) UNLESS OTHERWISE INDICATED ON THE DRAWING OR APPROVED BY JEA.
7. PIPE TO BE USED AS A CASING SHALL CONFORM TO EITHER ASTM STANDARD A139 FOR "ELECTRIC FUSION (ARC) WELDED STEEL PIPE". WITH A MINIMUM YIELD STRENGTH OF 35,000 PSI OR "API SPECIFICATION API-5LX, GRADE X-42 WELDED STEEL PIPE".

TYPICAL SPLIT CASING DETAIL - SEWER

PLATE S-25A

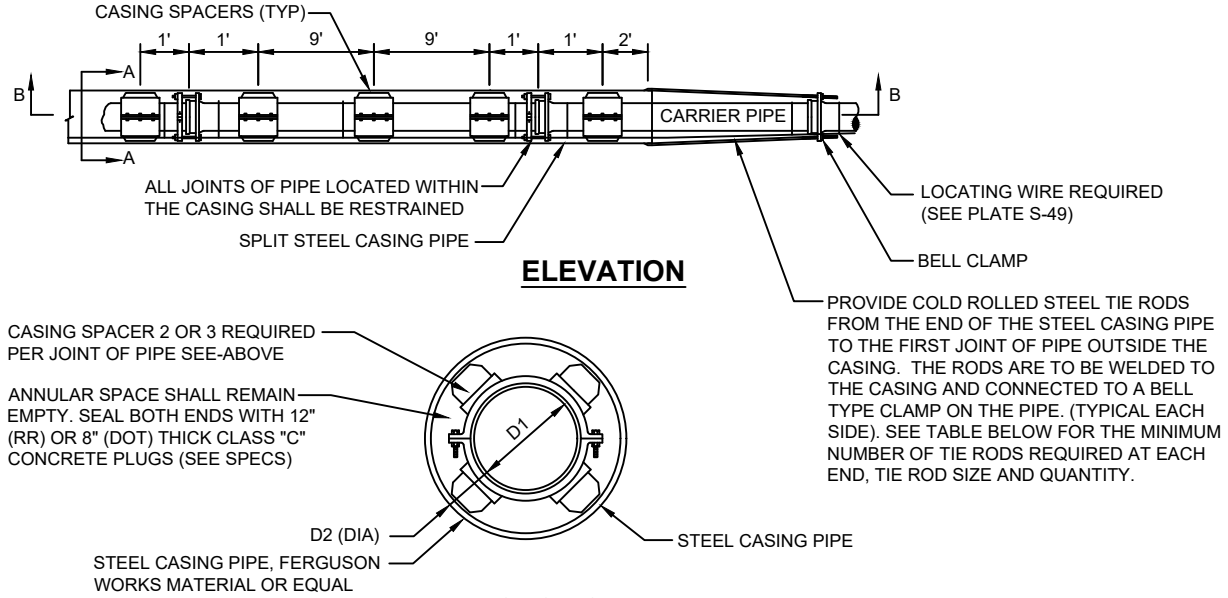

ELEVATION

SECTION "A-A"

CARRIER TYPE AND CASING PIPE SIZES (MIN) IN INCHES														
CARRIER PIPE NO. DIA. (D_1)	4	6	8	10	12	14	16	18	20	24	30	36	42	48
CASING PIPE NOM. DIA. (D_2)	14	16	20	20	24	30	30	30	36	42	48	54	60	66
WALL THICKNESS RAILROAD-(FEC)	0.25	1.25	0.375	0.375	0.375	0.50	0.50	0.50	0.562	0.625	0.625	0.688	0.781	0.781
WALL THICKNESS RAILROAD-(CSX)	0.25	0.281	0.375	0.375	0.375	0.469	0.469	0.469	0.562	0.625	0.688	0.781	0.844	0.938
WALL THICKNESS DOT	0.25	0.25	0.25	0.25	0.25	0.312	0.312	0.312	0.375	0.50	0.50	0.50	0.50	0.50
NUMBER OF TIE RODS (EACH END)	2	2	2	4	4	6	6	8	8	12	14	14	16	16
TIE ROD SIZE (DIA.)	3/4"	3/4"	3/4"	3/4"	3/4"	3/4"	3/4"	3/4"	3/4"	3/4"	1"	1"	1 1/4"	1 1/4"

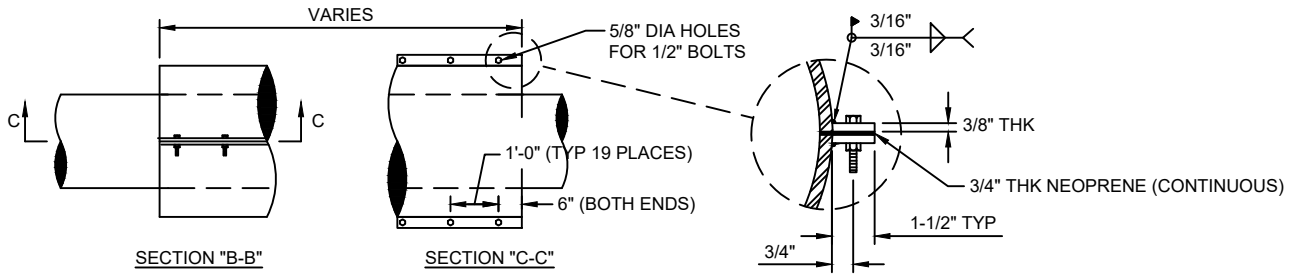

MATERIAL:	PIPE -	ATSM A53, GRADE B, ERW, STD WALL, CARBON STEEL
	PLATE -	STM A36, GRADE B, CARBON STEEL (THICKNESS AS NOTED)
WELDS	ALL WELDS SHALL BE PERFORMED BY A CERTIFIED WELDER	
LININGS/COATINGS:	INTERIOR -	BARE
	EXTERIOR -	BARE

PIPE MAIN FOR CROSSINGS USING SPLIT CASING PIPE

NOT ALLOWED UNDER RAILROADS

NOTES

1. NOT ALLOWED UNDER RAILROADS.
2. THE INSIDE DIAMETER OF THE CASING PIPE SHALL BE A MINIMUM OF 4 INCHES GREATER THAN THE OUTSIDE DIAMETER OF THE CARRIER PIPE BELL OR COUPLING.
3. ALL JOINTS WITHIN CARRIES PIPE SHALL BE MECHANICAL RESTRAINED JOINTS.
4. FOR STREET USES WHICH ARE NOT DOT OR RAILROAD, USE DOT CASING THICKNESS UNLESS OTHERWISE INDICATED BY ENGINEER.
5. CASING PIPE SHALL BE FURNISHED IN NOMINAL 8 FOOT LENGTHS (MIN.) UNLESS OTHERWISE INDICATED ON THE DRAWING OR APPROVED BY JEA.
6. PIPE TO BE USED AS A CASING SHALL CONFORM TO EITHER ASTM STANDARD A139 FOR "ELECTRIC FUSION (ARC) WELDED STEEL PIPE". WITH A MINIMUM YIELD STRENGTH OF 35,000 PSI OR "API SPECIFICATION API-5LX, GRADE X-42 WELDED STEEL PIPE".

BRIDGE DECK PIPE HANGER DETAIL

PLATE S-28

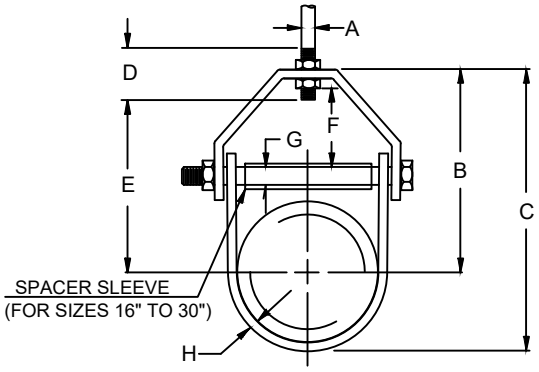

PIPE SIZE	MAX LOAD	WEIGHT	ROD SIZE A	B	C	ROD TAKE OUT E	ADJUST. F	G	H WIDTH LOWER
4	1430	1.51	5/8	5-9/16	7-13/16	4-1/2	1-11/16	3/8	1-1/4
6	1940	3.10	3/4	6-15/16	10-1/4	5-3/4	1-11/16	1/2	1-7/16
8	2000	4.75	3/4	8-3/8	12-11/16	7-3/16	2	1/2	1-7/16
10	3600	8.60	7/8	9-7/8	15-1/4	8-7/16	2-1/8	5/8	1-3/4
12	3800	11.20	7/8	11-9/16	17-15/16	10-1/8	2-13/16	5/8	2
16	4600	19.85	1	14	22	12	2-3/4	1	2-1/2
20	4800	40.33	1-1/4	17-9/16	27-9/16	15-3/16	3-7/8	1-1/4	3
24	4800	49.83	1-1/4	19-13/16	31-13/16	17-5/16	3-7/8	1-1/4	3
30	6000	70.18	1-1/4	24-3/16	39-3/16	21-9/16	5-1/8	1-1/4	3

NOTES :

1. ALL HANGER COMPONENTS SHALL BE 316 STAINLESS STEEL UNLESS OTHERWISE NOTED. ALL CUT ENDS SHALL HAVE ROUNDED CORNERS.
2. PROVIDE A HANGER AT EACH PIPE BELL. ADDITIONAL HANGERS SHALL BE SPACED AT TEN (10) FOOT CENTERS (MAX).
3. PIPE HANGERS LARGER THAN 12" SIZE SHALL BE SPECIFICALLY DESIGNED FOR HORIZONTAL AND VERTICAL STRUCTURAL SUPPORT. FOR LARGER MAINS, HORIZONTAL SUPPORT MAY BE ACHIEVED BY EXTENDING THE BOTTOM ANGLE TO SPAN BETWEEN TWO EXISTING CONCRETE BEAMS (NOT DIRECTLY CONNECTED TO CONCRETE BEAMS).
4. THE DIMENSION PROVIDED ABOVE MAY VARY DEPENDING ON ACTUAL FIELD CONDITIONS.
5. FOR CROSSINGS OVER 250 LINEAR FEET, THE USE OF FLEXIBLE EXPANSION JOINTS SHALL BE UTILIZED.

SIDEWALL PIPE HANGER DETAIL

PLATE S-35

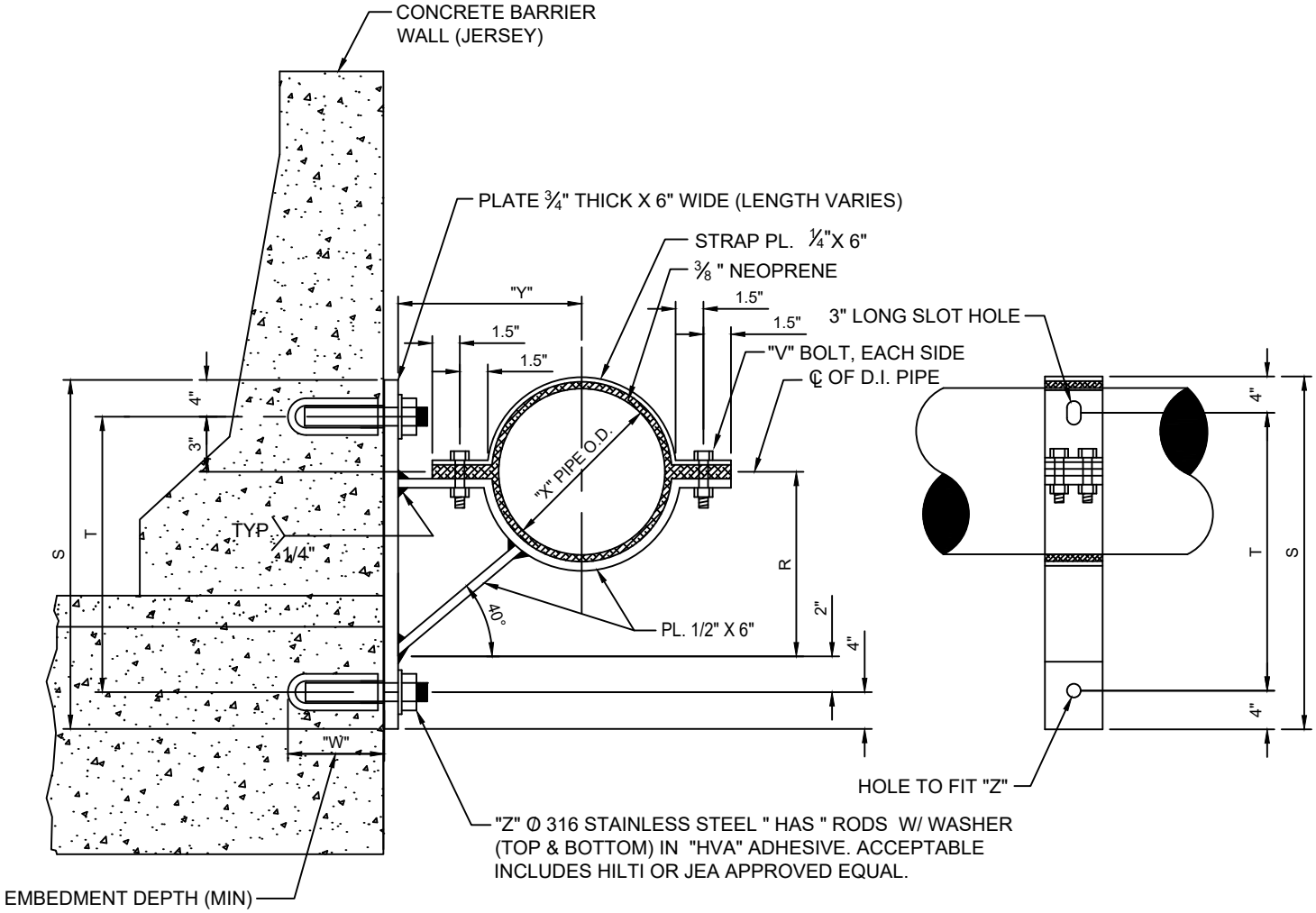

CROSS-SECTION PROFILE

PIPE SIZE	4"	6"	8"	10"	12"	16"	20"	24"
X	4.80"	6.90"	9.05"	11.10"	13.20"	17.40"	21.60"	25.80"
Y	8"	9"	10"	12"	13"	15"	17"	19"
Z	¾"	¾"	¾"	1"	1"	1"	1¼"	1¼"
W	6.625"	6.625"	6.625"	8.25"	8.25"	8.25"	12"	12"
V	1/2"	1/2"	1/2"	1/2"	1/2"	3/4"	3/4"	3/4"
R	6.72"	7.55"	8.39"	10.07"	10.91"	12.59"	14.27"	15.94"
S	19.71"	20.55"	21.39"	23.07"	23.91"	25.59"	27.26"	28.94"
T	11.72"	12.55"	13.39"	15.07"	15.91"	17.58"	19.26"	20.94"

NOTES :

1. ALL WELDS TO BE PERFORMED BY A CERTIFIED STRUCTURAL WELDER.
2. ALL SUPPORT BRACKET MEMBERS SHALL BE HOT DIPPED GALVANIZED AFTER FABRICATION.
3. ALL NUTS, BOLTS, AND WASHERS SHALL BE 316 STAINLESS STEEL.
4. THE SPACING OF SIDEWALL PIPE SUPPORTS SHALL BE SPECIFICALLY DESIGNED BASED UPON MANY FACTS INCLUDING PIPE SIZE AND MATERIAL EMBEDEMENT LIMITATIONS. UNLESS APPROVED OTHERWISE BY JEA, IN NO CASE SHALL THE SPACING OF PIPE SUPPORTS EXCEED TWENTY (20) FEET ON-CENTER FOR PIPE SIZES TWELVE (12) INCH AND SMALLER AND TEN (10) FEET ON-CENTER FOR PIPE SIZES GREATER THAN TWELVE (12) INCHES.

PIPE SUPPORT & POLE ASSEMBLY FOR FORCE MAIN

PLATE S-36

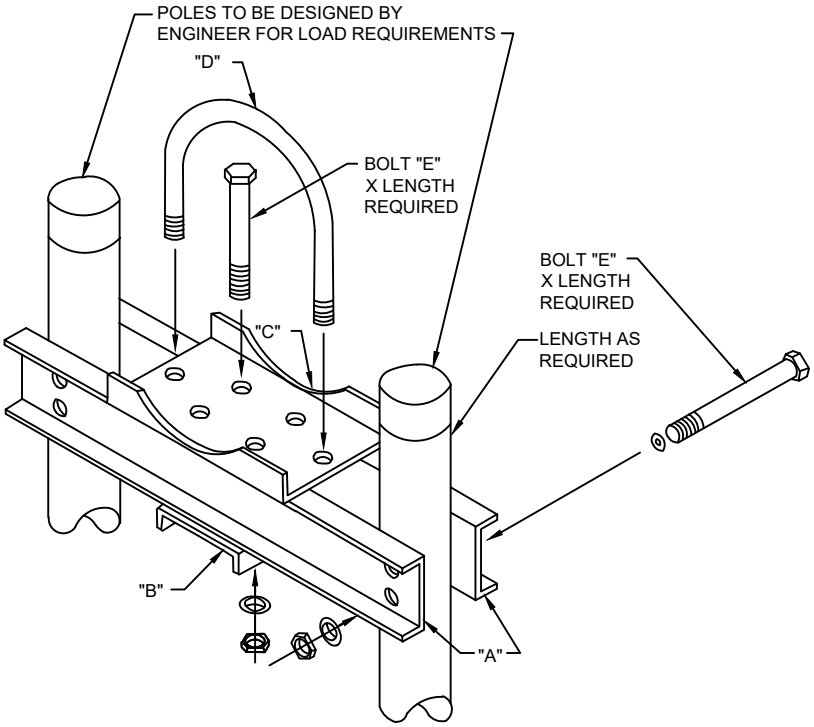

MATERIAL SCHEDULE

ITEM	PIPE 4"-14"	PIPE 16"-24"
A	8" [11.5	12" [25.0
B	10" [15.3	12" [25.0
C	12" [25.0	12" [25.0
D	1/2" U-BOLT	1-1/8" U-BOLT
E	3/4" U-BOLT	1-1/8" U-BOLT

NOTES:

1. ALL PARTS AND FITTINGS TO BE HOT DIPPED GALVANIZED AFTER FABRICATION SEE PLATE S-37 FOR ADDITIONAL DETAILS.
2. AT A MINIMUM, ONE PIPE SUPPORT SHALL BE PROVIDED FOR EACH LENGTH OF (D.I.P.) PIPE UNLESS LONG-SPAN (D.I.P.) PIPE ASSEMBLIES ARE PROVIDED.

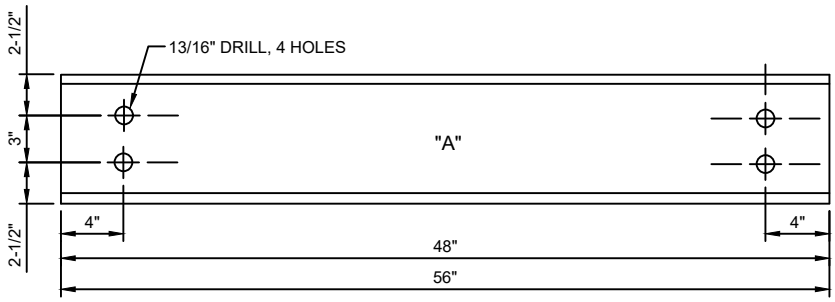

"A" STANDARD 8" CHANNEL 11.5 LBS.

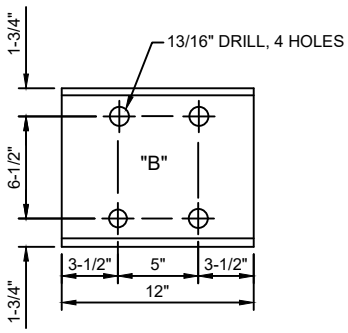

"B" STANDARD 10" CHANNEL 15.3 LBS.

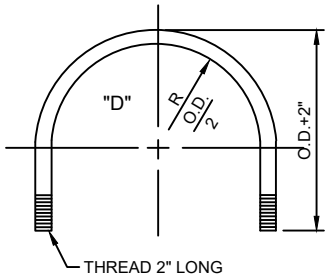

"D" ½" U-BOLT

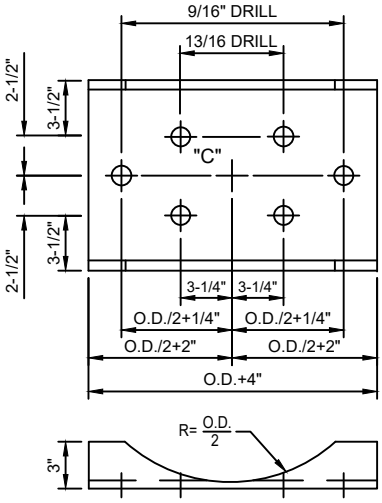

"C" STANDARD 12" CHANNEL 25 LBS.

D.I. PIPE	O.D. APPROX
3"	4.71"
4"	5.55"
6"	7.65"
8"	9.80"
10"	11.85"
12"	13.95"
14"	16.05"
16"	18.15"
18"	20.25"
20"	22.35"
24"	26.55"

TABLE

NOTES:

1. FOR PIPE 16" AND LARGER, UTILIZE CHANNEL SIZES AS SCHEDULED ON PLATE S-36, BUT CUSTOMIZE BOLT PATTERN DIMENSIONS TO FIT PIPE SIZE. SEE PLATE S-36 FOR ASSEMBLY LAYOUT.

SWABBING PORT AND CLEAN OUT VAULT DETAIL-SECTION

PLATE S-54

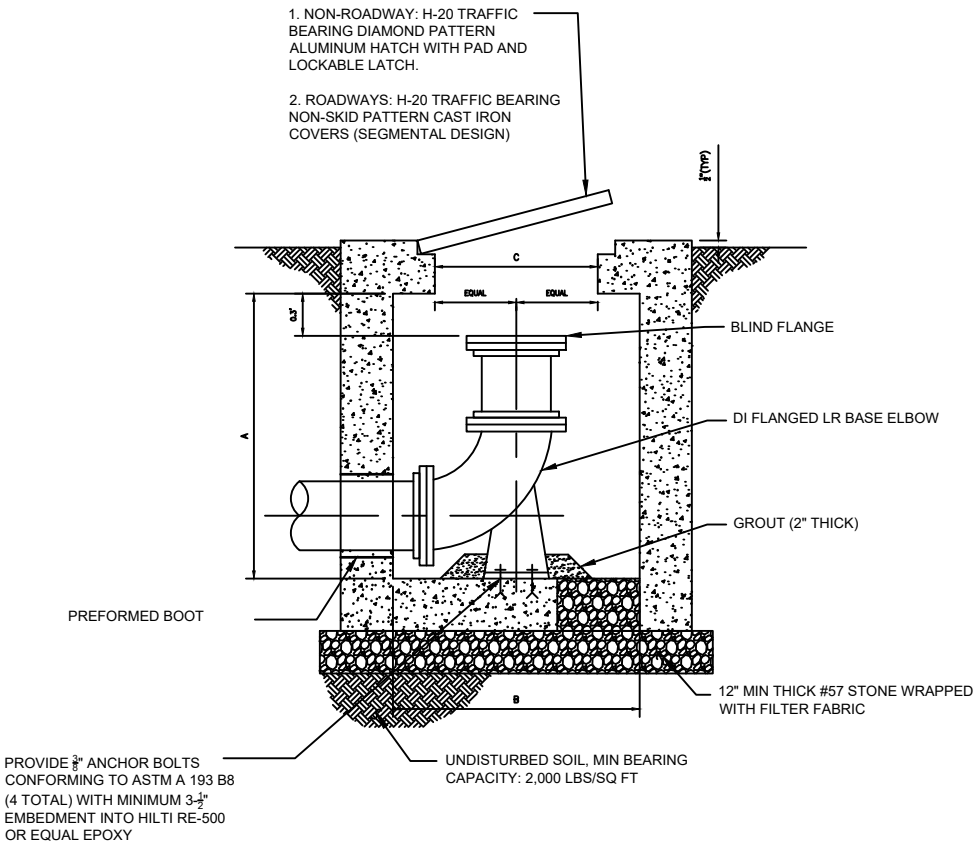

SWABBING PORT AND CLEAN OUT VAULT DETAIL-PLAN

PLATE S-54A

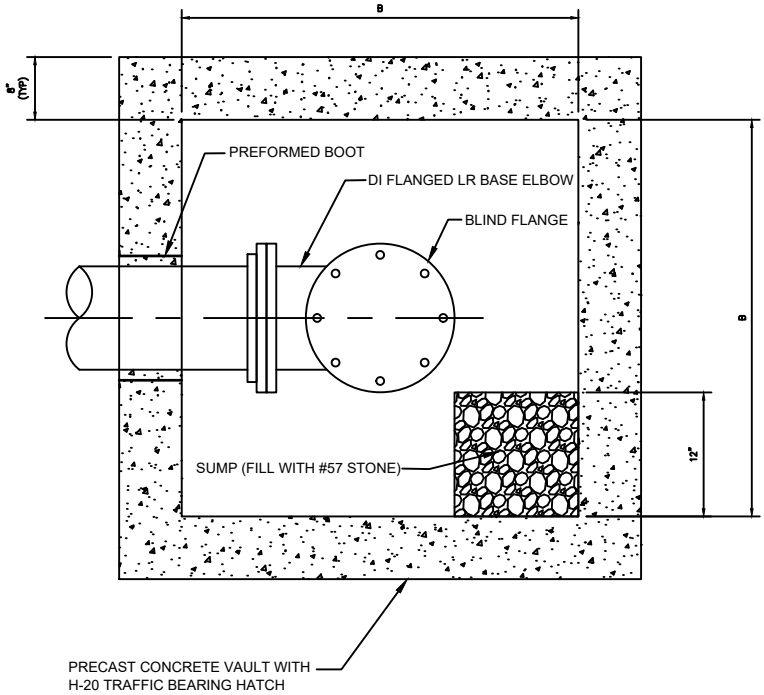

SWABBING LAUNCHING STATION DETAIL FOR NEW FORCE MAIN UP TO 24"

PLATE S-54B

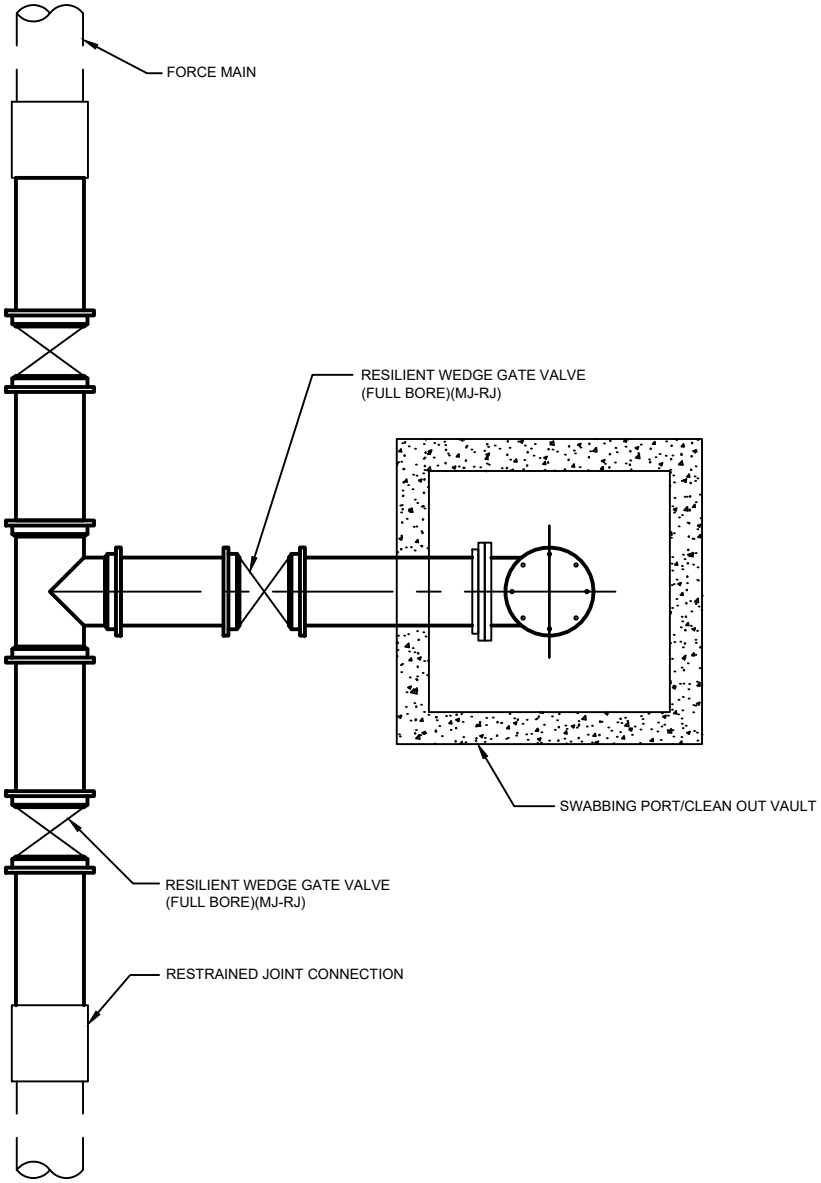

SWABBING LAUNCHING STATION DETAIL FOR FORCE MAINS UP TO 24" - PLAN

PLATE S-54C

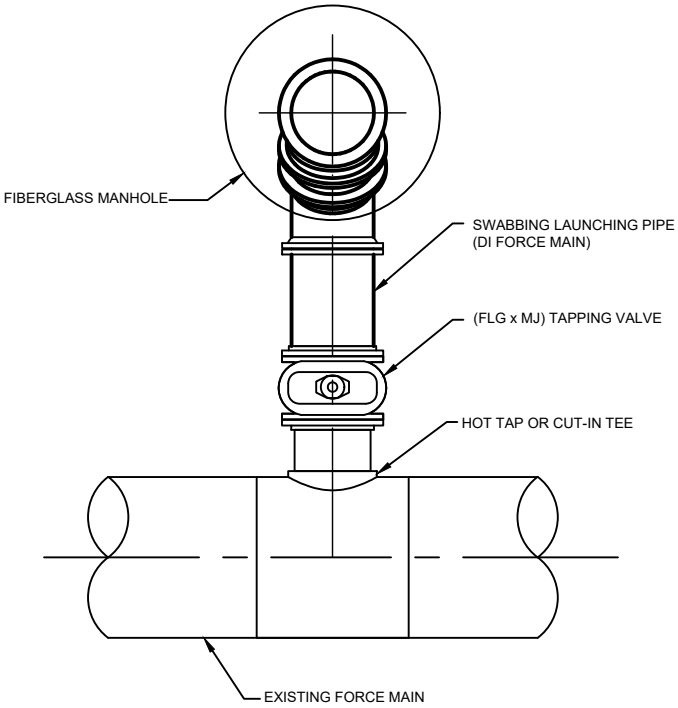

NOTES:

1. FOR HOT TAP CONNECTIONS ON EXISTING FORCE MAINS 10" DIAMETER AND GREATER, DIAMETER OF TAPPING VALUE AND PIG LAUNCHING PIPE SHALL BE ONE NOMINAL SIZE LESS THAN EXISTING FORCE MAIN.

RETROFIT SWABBING LAUNCHING STATION DETAIL FOR FORCE MAINS UP TO 24" - SECTION

PLATE S-54D

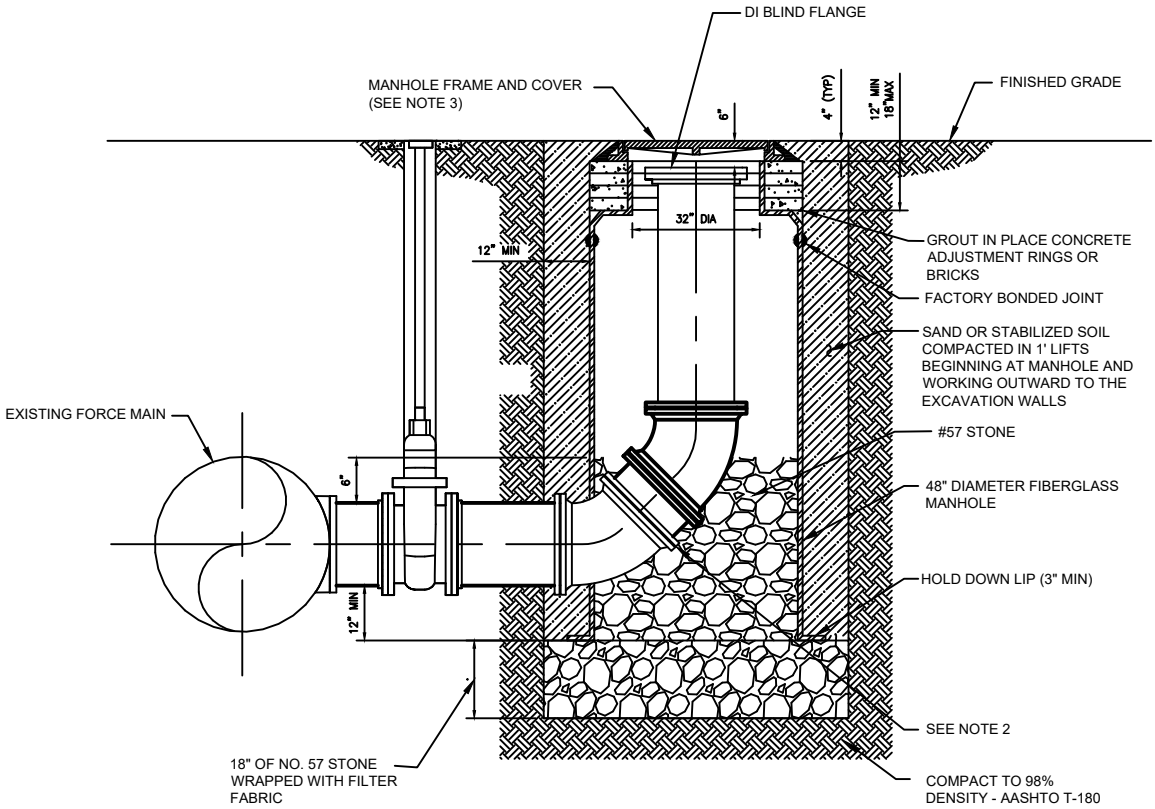

NOTES:

1. PROVIDE ALL MATERIALS IN ACCORDANCE TO JEA WATER AND WASTEWATER STANDARD SPECIFICATIONS.
2. USE TWO VERTICAL 45 DEGREE MJ BENDS OR LONG RADIUS 90 DEGREE MJ BEND.
3. PROVIDE STANDARD JEA FRAME AND COVER.
4. RESTRAIN ALL JOINTS.

LOCATE WIRE CONSTRUCTION FOR FORCE MAINS

PLATE S-49

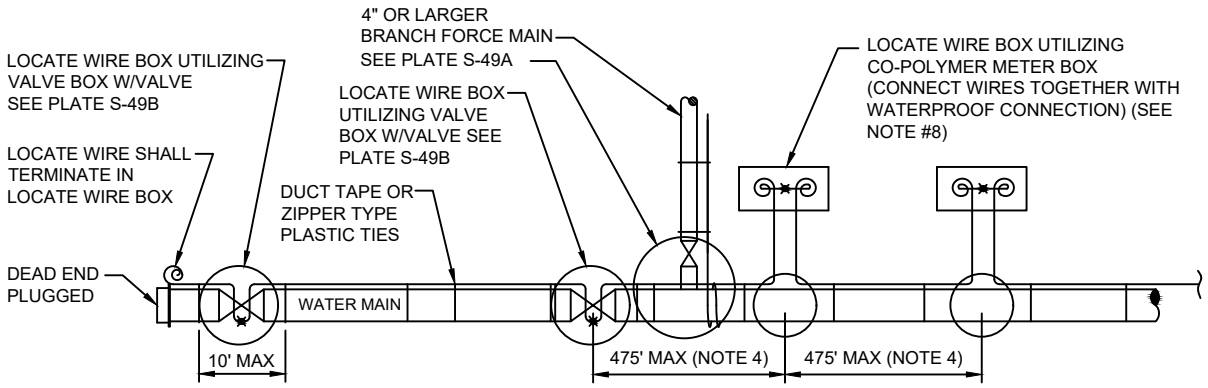

LOCATE WIRE SYSTEM

NOTES:

1. LOCATING WIRE TO BE INSTALLED IN EITHER THE ONE OR ELEVEN O'CLOCK POSITION ON ALL DUCTILE IRON 0R PVC (PRESSURE MAINS). LOCATE WIRE SHALL ALSO BE INSTALLED ON ALL (HDPE) POLY MAIN PIPING (1:00 OR 11:00 POSITION, IF POSSIBLE).
2. SECURE LOCATING WIRE TO PVC FORCE MAIN BY USE OF DUCT TAPE OR ZIPPER TYPE PLASTIC TIE STRAPS SPACED AT A MAXIMUM DISTANCE OF TEN (10') AND AT EACH SIDE OF BELL JOINT OR FITTING.
3. THE ENTIRE LOCATING SYSTEM SHALL BE SUBJECTED TO TESTING TO DETERMINE ITS RELIABILITY. WHERE INSTALLED UNDER PAVEMENT AREAS, TESTING SHALL BE DONE PRIOR TO THE PLACEMENT OF PAVEMENT, UNLESS APPROVED OTHERWISE BY JEA.
4. LOCATING WIRE SHALL TERMINATE WITHIN AN ACTIVE VALVE BOX (WITH A VALVE) OR A METER BOX (IF NO VALVE) AT 475' INTERVALS. SEE DETAIL PLATE S-49B. WIRE CONNECTIONS BELOW GROUND (OUTSIDE OF A BOX) SHALL BE AVOIDED.
5. LOCATING WIRE SHALL BE 12 GAUGE COPPER WIRE WITH .03 INCHES (MINUMUM) HDPE INSULATION THICKNESS, 0.141 INCHES (MINIMUN) O.D. RATED BREAK LOAD 250LBS., UF RATED (DIRECT BURIAL), GREEN COLOR. FOR HDD INSTALLATIONS, THE LOCATE WIRE SHALL BE COPPER CODED STEEL AS SPECIFIED IN SPEC. SECTION 750.
6. "✖" INDICATES THAT THE WIRES ARE CONNECTED TOGETHER WITH WATERPROOF CONNECTION. (SEE DETAIL W-49B)
7. "◎" INDICATES A WIRE PIG-TAIL (24" LONG)
8. AN "LW" CUT SHALL BE CARVED IN THE CONCRETE CURB AND PAINTED AT ALL LOCATE WIRE BOXES.
9. FOUR LANES OF TRAFFIC (HAVING TWO LANES OF TRAFFIC IN EACH DIRECTION) OR GREATER THE LOCATE WIRE AND VALVE BOX SHALL BE OFF-SET TO THE RIGHT-OF-WAY.

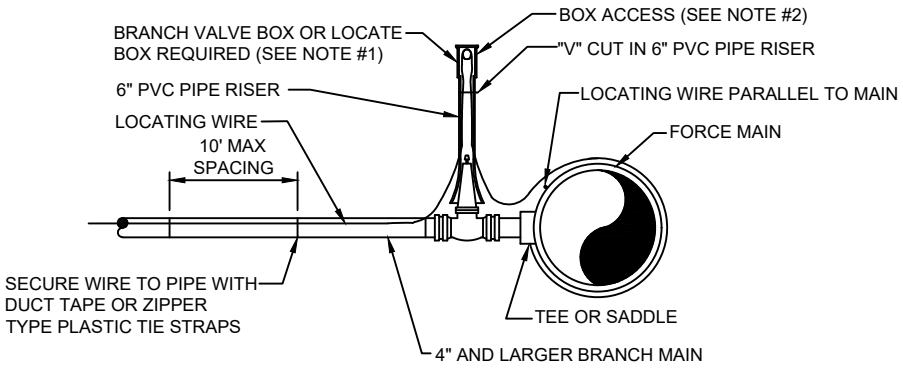

BRANCH FORCE MAIN

(4" AND LARGER SEWER MAIN)

NOTE:

1. NOTE THAT THE BRANCH WIRE IS NOT CONNECTED TO THE MAIN WIRE.
2. LOCATE WIRE SHALL ENTER THE VALVE BOX THROUGH A "V" CUT IN THE 6" PVC RISER PIPE SECTION (SEE S-30).
3. LOCATE WIRE BOX SHALL BE INSTALLED OUTSIDE OF SIDEWALKS, DRIVEWAYS AND PAVEMENT.
4. " " INDICATES A WIRE PIG-TAIL (4' LONG)

LOCATE WIRE BOX

PLATE S-49B

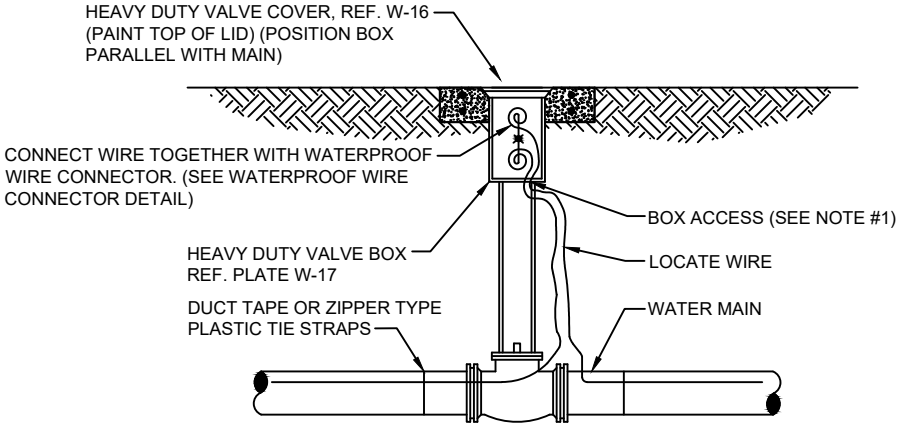

LOCATE WIRE BOX UTILIZING VALVE BOX

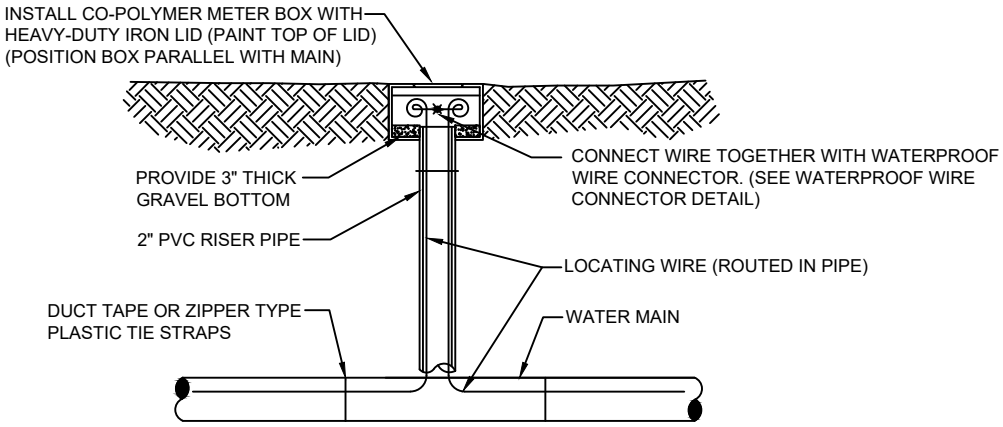

LOCATE WIRE BOX UTILIZING METER BOX

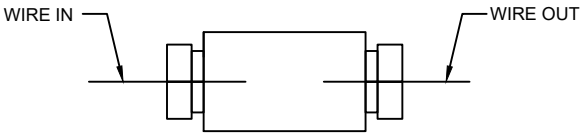

WATERPROOF WIRE CONNECTOR DETAIL

NOTES:

1. LOCATE WIRE SHALL ENTER THE VALVE BOX THROUGH A "V" CUT IN THE 6" PVC RISER PIPE (SEE W-18).
2. LOCATE WIRE SHALL HAVE ENOUGH SLACK TO REACH 4' ABOVE FINAL GRADE AND LOCATE POINTS.
3. LOCATE WIRE CONNECTION SHALL ONLY BE A 2 WAY CONNECTION.

AIR VALVE ASSEMBLY INSIDE MANHOLE

PLATE S-29

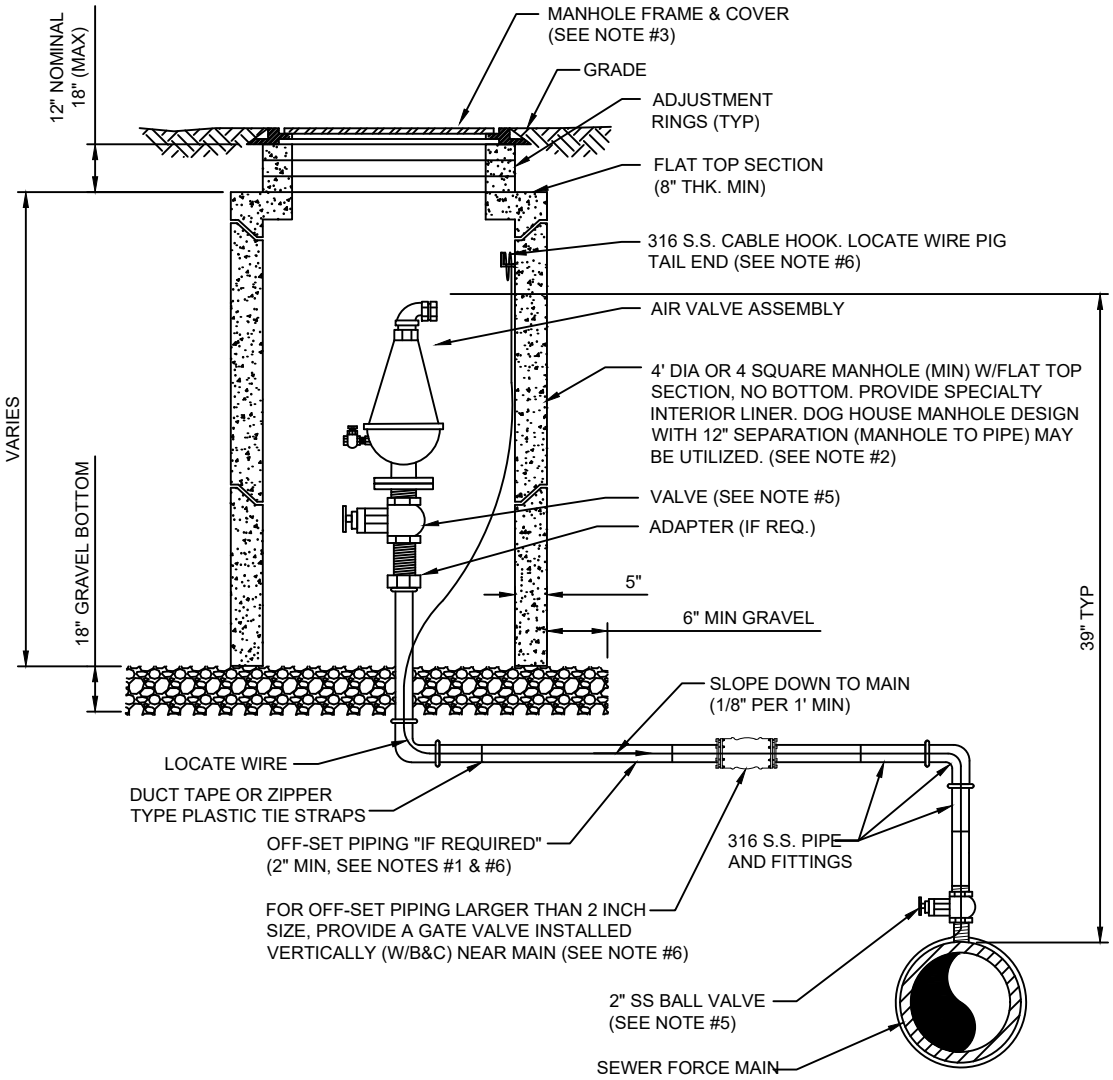

NOTES:

1. THE AIR ASSEMBLY MANHOLE SHALL BE LOCATED OUTSIDE OF THE ROADWAY PAVEMENT AREA (I.E. LOCATED IN NON-TRAFFIC AREAS). IF OFF-SET PIPING IS REQUIRED, THE PIPING SHALL BE 2 INCH MINIMUM, (SAME SIZE AS AIR VALVE INLET). FOR PIPE SIZES 3 INCH AND SMALLER: PIPING SHALL BE 316 STAINLESS STEEL SCH.40, STD GRADE, THREADED. FOR PIPE SIZES 4 INCH AND LARGER: PIPING SHALL BE 316 STAINLESS STEEL SCH. 10 (MIN), WELDED OR PVC DR-18 PIPE AND FITTINGS-RESTRAINED.

2. THE CONCRETE MANHOLE SHALL INCLUDE A POLYURETHANE SPECIALTY LINER (PER SPEC SECTION 446) TO BE INSTALLED ON THE INTERIOR SURFACES INCLUDING THE RISER SECTION TOP AND THE ADJUSTMENT RINGS. A BITUMINOUS WATERPROOFING MATERIAL SHALL BE PROVIDED ON THE OUTSIDE SURFACES OF THE MANHOLE.

3. FRAME AND COVER SHALL BE JEA STANDARD. THE COVER SHALL HAVE NO GASKET TO ALLOW AIR TO EXIT VAULT (REMOVE GASKET IF NECESSARY FROM THE UNDER SIDE OF STANDARD JEA COVER). THE COVER (WHEN FLIPPED OPEN) MUST CLEAR THE AIR VALVE ASSEMBLY AT ALL TIMES OR A SQUARE TOP WITH ALUMINUM DOOR SHALL BE PROVIDED (NON-TRAFFIC LOCATIONS ONLY).

4. FOR PIPE SIZES 3 INCH AND SMALLER, PROVIDE A STAINLESS STEEL BALL VALVE (2" MIN). FOR PIPE SIZES 4 INCH AND LARGER, PROVIDE A FLANGE GATE VALVE (WHEEL OPERATOR) OR PLUG VALVE. (LEVER ARM OPERATOR) SEE SPECIFICATION FOR ADDITIONAL REQUIREMENTS.

5. FOR A 2" AIR VALVE, PROVIDE 2" STAINLESS STEEL BALL VALVE AT THE MAIN. FOR AIR VALVES LARGER THAN 2" SIZE, PROVIDE A TAPPING SLEEVE OR DUCTILE IRON TEE FITTING. ALSO, FOR OFF-SET PIPING LARGER THAN 2 INCH SIZE, PROVIDE A GATE VALVE (INSTALLED VERTICALLY NEAR MAIN). SEE SPECIFICATIONS FOR ADDITIONAL REQUIREMENTS.

6. LOCATE WIRE SHALL HAVE ENOUGH SLACK TO REACH 4' ABOVE FINAL GRADE.

OPTIONAL LOW PROFILE AIR VALVE ASSEMBLY INSIDE MANHOLE

PLATE S-29A

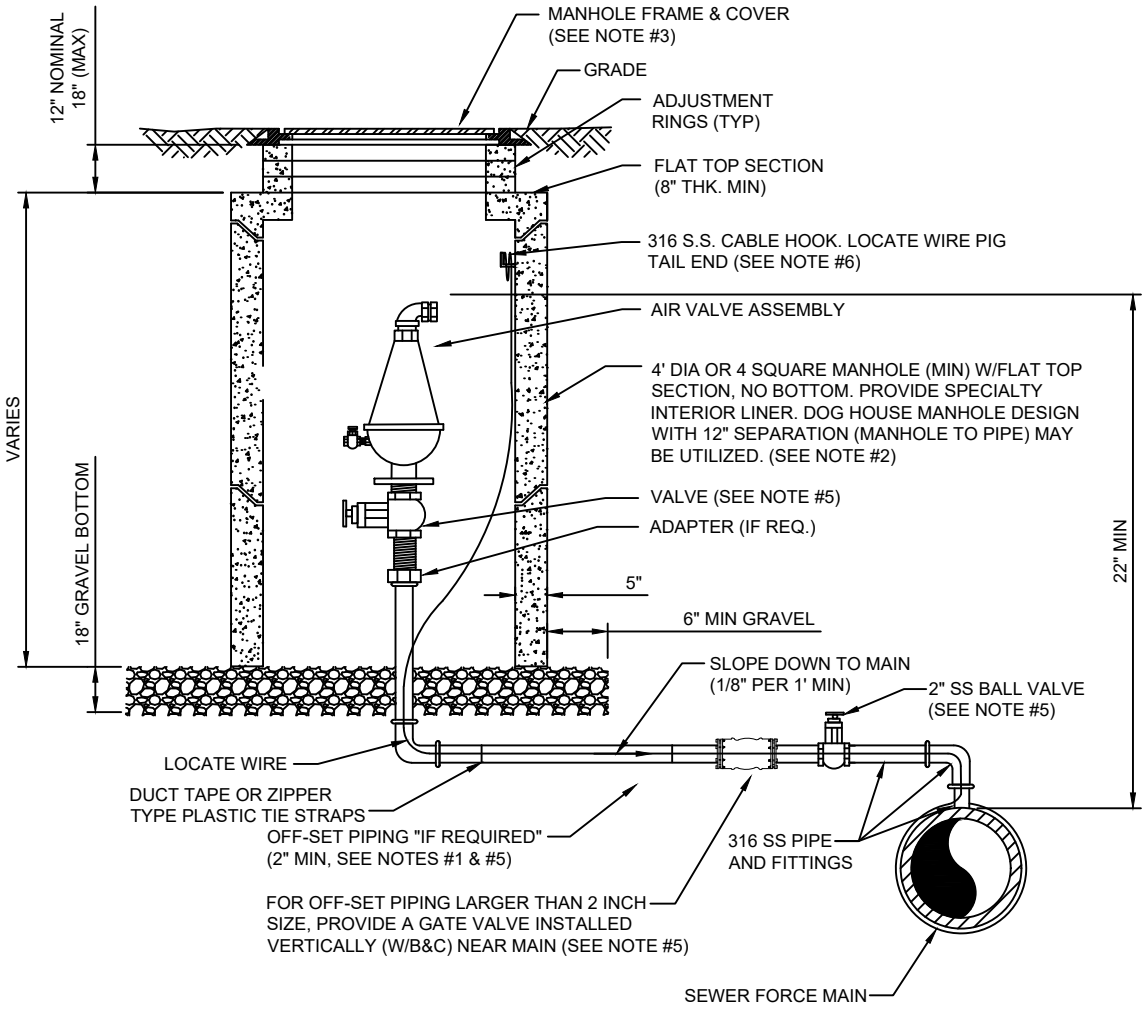

NOTES:

1. THE AIR ASSEMBLY MANHOLE SHALL BE LOCATED OUTSIDE OF THE ROADWAY PAVEMENT AREA (I.E. LOCATED IN NON-TRAFFIC AREAS). IF OFF-SET PIPING IS REQUIRED, THE PIPING SHALL BE 2 INCH MINIMUM, (SAME SIZE AS AIR VALVE INLET). FOR PIPE SIZES 3 INCH AND SMALLER: PIPING SHALL BE 316 STAINLESS STEEL SCH.40, STD GRADE, THREADED. FOR PIPE SIZES 4 INCH AND LARGER: PIPING SHALL BE 316 STAINLESS STEEL SCH. 10 (MIN), WELDED OR PVC DR-18 PIPE AND FITTINGS-RESTRAINED.

2. THE CONCRETE MANHOLE SHALL INCLUDE A POLYURETHANE SPECIALTY LINER (PER SPEC SECTION 446) TO BE INSTALLED ON THE INTERIOR SURFACES INCLUDING THE RISER SECTION TOP AND THE ADJUSTMENT RINGS. A BITUMINOUS WATERPROOFING MATERIAL SHALL BE PROVIDED ON THE OUTSIDE SURFACES OF THE MANHOLE.

3. FRAME AND COVER SHALL BE JEA STANDARD. THE COVER SHALL HAVE NO GASKET TO ALLOW AIR TO EXIT VAULT (REMOVE GASKET IF NECESSARY FROM THE UNDER SIDE OF STANDARD JEA COVER). THE COVER (WHEN FLIPPED OPEN) MUST CLEAR THE AIR VALVE ASSEMBLY AT ALL TIMES OR A SQUARE TOP WITH ALUMINUM DOOR SHALL BE PROVIDED (NON-TRAFFIC LOCATIONS ONLY).

4. FOR PIPE SIZES 3 INCH AND SMALLER, PROVIDE A STAINLESS STEEL BALL VALVE (2" MIN). FOR PIPE SIZES 4 INCH AND LARGER, PROVIDE A FLANGE GATE VALVE (WHEEL OPERATOR) OR PLUG VALVE. (LEVER ARM OPERATOR) SEE SPECIFICATION FOR ADDITIONAL REQUIREMENTS.

5. FOR A 2" AIR VALVE, PROVIDE 2" STAINLESS STEEL BALL VALVE AT THE MAIN. FOR AIR VALVES LARGER THAN 2" SIZE, PROVIDE A TAPPING SLEEVE OR DUCTILE IRON TEE FITTING. ALSO, FOR OFF-SET PIPING LARGER THAN 2 INCH SIZE, PROVIDE A GATE VALVE (INSTALLED VERTICALLY NEAR MAIN). SEE SPECIFICATIONS FOR ADDITIONAL REQUIREMENTS.

6. LOCATE WIRE SHALL HAVE ENOUGH SLACK TO REACH 4' ABOVE FINAL GRADE.

AIR VALVE ASSEMBLY INSIDE MANHOLE IN ROW

PLATE S-29B

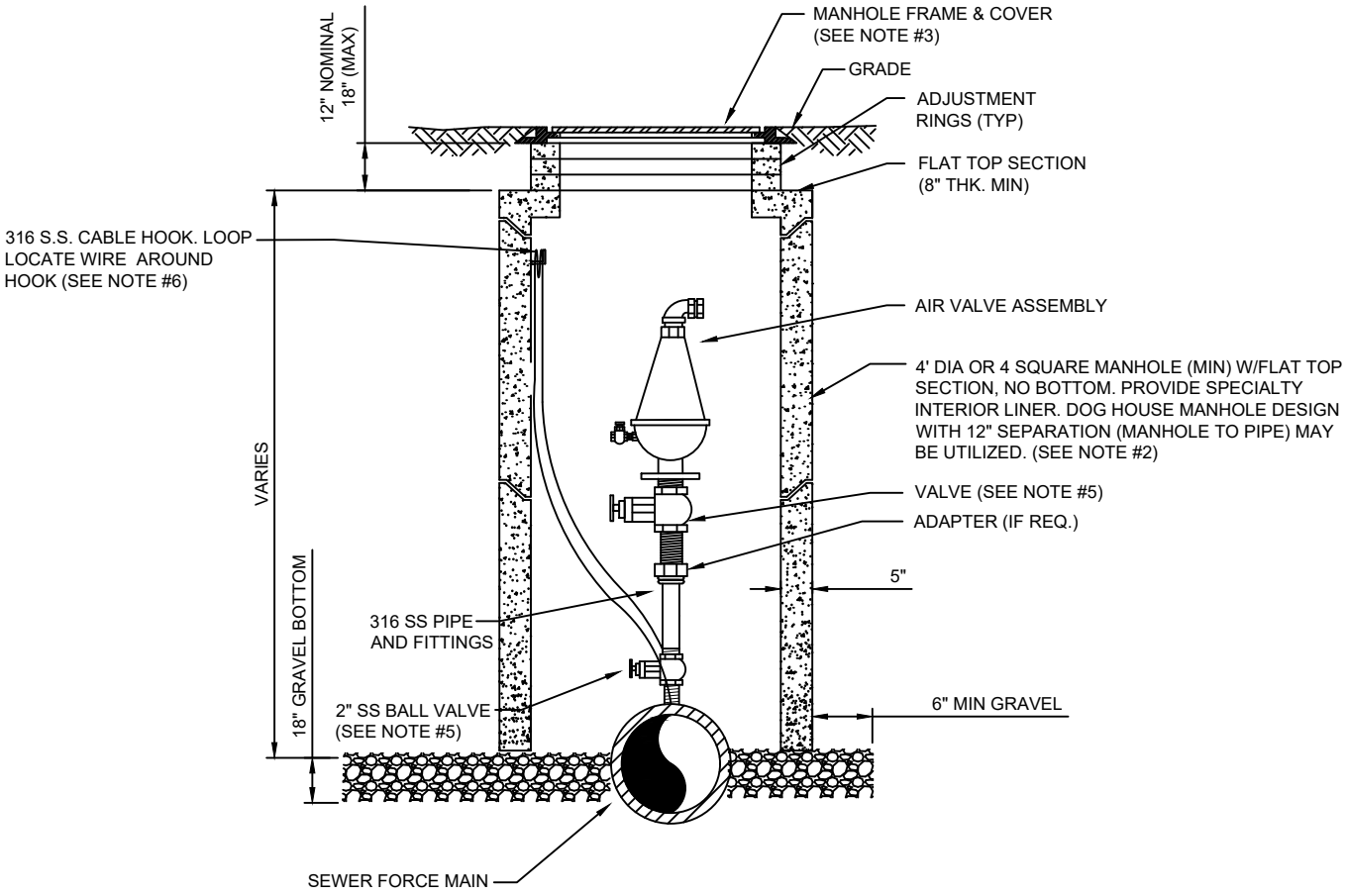

NOTES:

1. THE AIR ASSEMBLY MANHOLE SHALL BE LOCATED OUTSIDE OF THE ROADWAY PAVEMENT AREA (I.E. LOCATED IN NON-TRAFFIC AREAS).
2. THE CONCRETE MANHOLE SHALL INCLUDE A POLYURETHANE SPECIALTY LINER (PER SPEC SECTION 446) TO BE INSTALLED ON THE INTERIOR SURFACES INCLUDING THE RISER SECTION TOP AND THE ADJUSTMENT RINGS. A BITUMINOUS WATERPROOFING MATERIAL SHALL BE PROVIDED ON THE OUTSIDE SURFACES OF THE MANHOLE.
3. FRAME AND COVER SHALL BE JEA STANDARD. THE COVER SHALL HAVE NO GASKET TO ALLOW AIR TO EXIT VAULT (REMOVE GASKET IF NECESSARY FROM THE UNDER SIDE OF STANDARD JEA COVER). THE COVER (WHEN FLIPPED OPEN) MUST CLEAR THE AIR VALVE ASSEMBLY AT ALL TIMES OR A SQUARE TOP WITH ALUMINUM DOOR SHALL BE PROVIDED (NON-TRAFFIC LOCATIONS ONLY).
4. FOR PIPE SIZES 3 INCH AND SMALLER, PROVIDE A STAINLESS STEEL BALL VALVE (2" MIN). FOR PIPE SIZES 4 INCH AND LARGER, PROVIDE A FLANGE GATE VALVE (WHEEL OPERATOR) OR PLUG VALVE. (LEVER ARM OPERATOR) SEE SPECIFICATION FOR ADDITIONAL REQUIREMENTS.
5. FOR A 2" AIR VALVE, PROVIDE 2" STAINLESS STEEL BALL VALVE AT THE MAIN. FOR AIR VALVES LARGER THAN 2" SIZE, PROVIDE A TAPPING SLEEVE OR DUCTILE IRON TEE FITTING. ALSO, FOR OFF-SET PIPING LARGER THAN 2 INCH SIZE, PROVIDE A GATE VALVE (INSTALLED VERTICALLY NEAR MAIN). SEE SPECIFICATIONS FOR ADDITIONAL REQUIREMENTS.
6. LOCATE WIRE SHALL HAVE ENOUGH SLACK TO REACH 4' ABOVE FINAL GRADE.

SEWER VALVE DETAIL

PLATE S-30

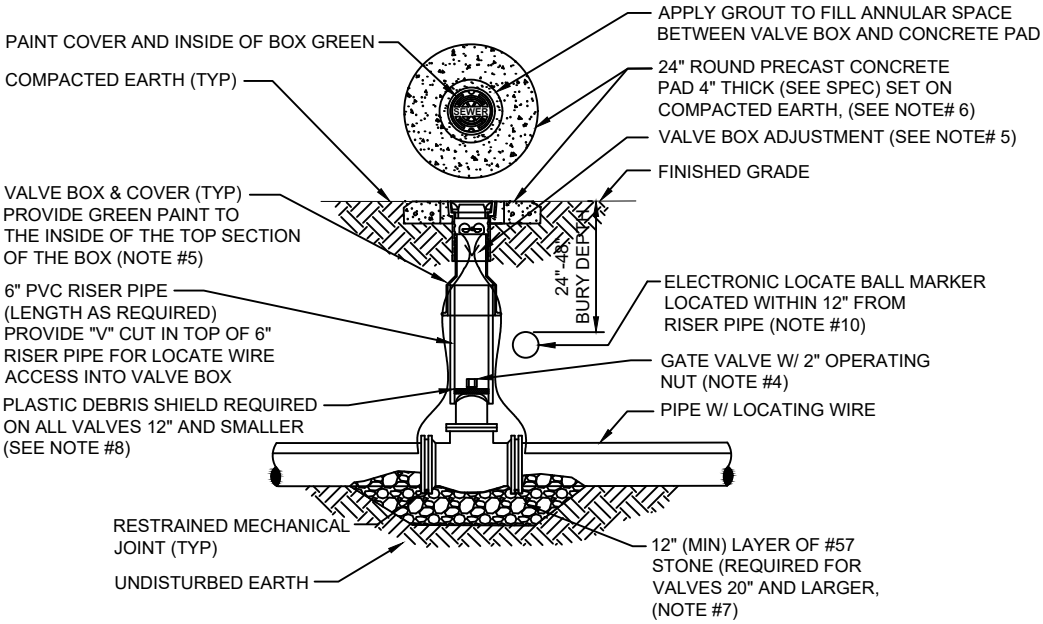

NOTES:

1. FOR UNPAVED LOCATIONS, A PRECAST CONCRETE VALVE PAD SHALL BE PROVIDED AND INSTALLED FLUSH WITH GRADE. CONCRETE PAD IS NOT REQUIRED FOR VALVE LOCATED IN THE ROADWAY, UNLESS SHOWN OR NOTED OTHERWISE.

2. LOCATING WIRE IS REQUIRED ON ALL PRESSURE PIPING (SEE DETAIL S-49).

3. A "V" CUT SHALL BE CARVED IN THE CURB CLOSEST/(ASPHALT IF NO CURB) ADJACENT TO ALL BELOW GRADE VALVES. THE "V" CUT IS TO BE PAINTED GREEN.

4. IN PAVED AREAS, INSTALL VALVE AT A DEPTH TO ALLOW A 12" MIN. DISTANCE BETWEEN THE VALVE COVER PLATE AND THE TOP OF THE VALVE OPERATING NUT. OUTSIDE OF PAVED AREAS (GRASS), INSTALL VALVE AT A DEPTH TO ALLOW A 6" MINIMUM DISTANCE BETWEEN THE VALVE COVER AND THE TOP OF THE VALVE OPERATING NUT. OPERATING NUT/STEM EXTENSION SHALL BE PROVIDED (WHERE APPLICABLE) SO THAT THE OPERATING NUT WILL BE NO MORE THAN 30 INCHES BELOW FINISHED GRADE.

5. FOR NEW CONSTRUCTION, THE VALVE BOX SHALL BE ADJUSTED TO MIDRANGE TO ALLOW FOR FUTURE BOX ADJUSTMENTS. ROUTE LOCATE WIRES THRU A "V" CUT IN THE TOP OF THE 6" PVC RISER PIPE FOR LOCATE WIRE ACCESS INTO VALVE BOX. THE LOCATE WIRES WITH A 24" LONG PIG-TAIL AT THE TOP SHALL BE CONNECTED TOGETHER WITH A WIRE NUT.

6. BRASS IDENTIFICATION TAG INDICATING "SEWER", VALVE SIZE, DIRECTION AND TURNS TO OPEN & VALVE TYPE. PROVIDE A ¼" HOLE IN BRASS TAG AND ATTACH TAG (TWIST WIRE AROUND TAG) TO THE END OF THE LOCATE WIRE. TAGS ARE NOT REQUIRED ON VALVES INSTALLED ON FIRE HYDRANT BRANCH LINES.

7. IN LIEU OF PRECAST CONCRETE PAD, A 6" THICK X 24" (ROUND OR SQUARE) POURED CONCRETE PAD W/2 - #4 REBAR AROUND PERIMETER, MAY BE USED.

8. GRAVEL SHALL BE PROVIDED UNDER ALL VALVES 20" AND LARGER. THE MINIMUM VERTICAL LIMIT OF GRAVEL IS 12" UNDER THE VALVE UP TO ⅓ THE OVERALL HEIGHT OF THE VALVE.

9. FOR VALVES 12 INCH AND SMALLER, PROVIDE A WHITE OR BLACK PLASTIC DEBRIS SHIELD WHICH INSTALLS BELOW THE OPERATING NUT. THIS SHIELD SHALL CENTER THE RISER PIPE BOX OVER THE OPERATING NUT AND MINIMIZE INFILTRATION. SHIELD SHALL BE BY AFC, BOXLOK OR APPROVED EQUAL.

10. ALL VALVES SHALL BE INSTALLED WITH AN ELECTRIC LOCATE MARKER. MARKER SHALL BE 4" DIA. COLOR CODED BALL MARKER (3M-1404XR FOR SEWER).

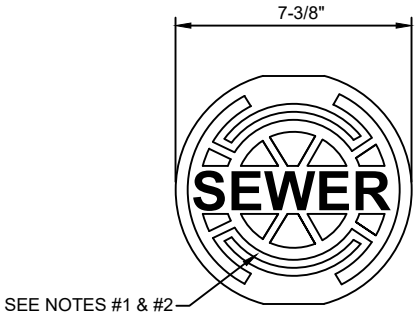

HEAVY DUTY RATING

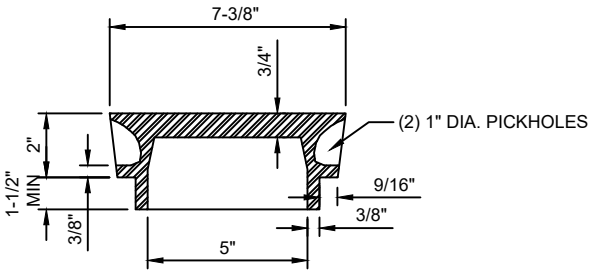

NOTES:

1. PAINT TOP OF THE COVER WITH ENAMEL PAINT (GREEN COLOR).
2. LID WEIGHT: APPROX. 12 LBS.

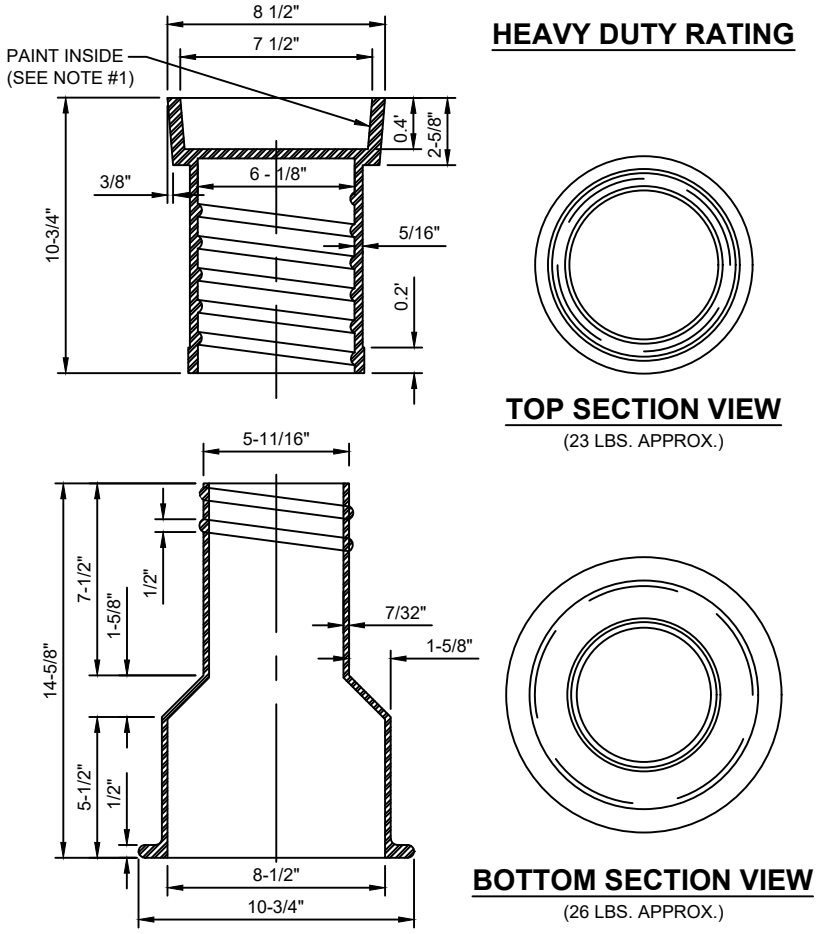

NOTES:

1. PAINT THE INSIDE OF THE TOP SECTION OF THE BOX WITH GREEN COLOR.
2. HEAVY DUTY RATING (TOTAL WEIGHT APPROX. 50 LBS.).
3. REFERENCE SECTION 430, PARAGRAPH VI.2.

SEWER VALVE JACKET ADJUSTMENT AFTER ROADWAY RE-SURFACING

PLATE S-33

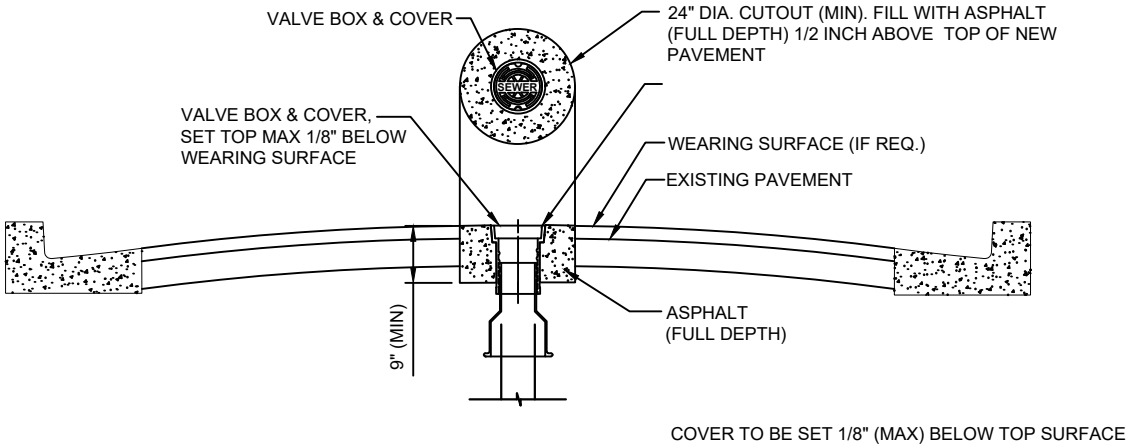

NOTES :

1. PROVIDE FULL DEPTH ASPHALT 1/2 INCH ABOVE TOP OF NEW PAVEMENT LEVEL, TO ALLOW FOR FUTURE ASPHALT MATERIAL COMPACTION. PLACE AND COMPACT ASPHALT IN 2" (MAX) LIFTS.

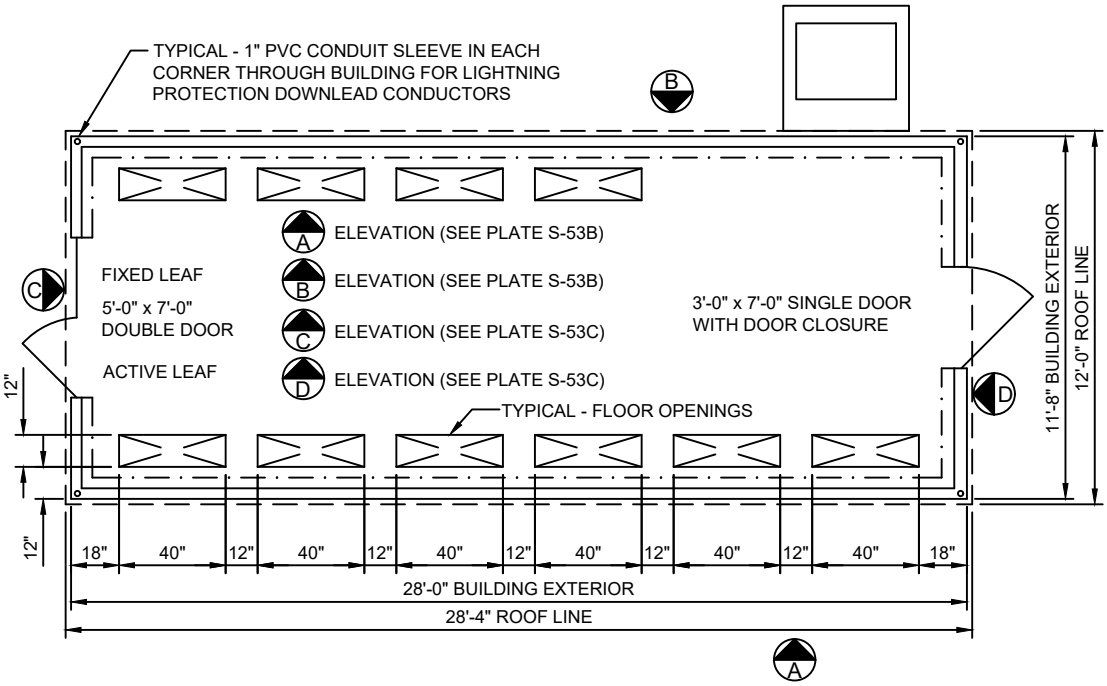

PRE-CAST CONCRETE BUILDING FLOOR PLAN

NOTES:

1. THE ELECTRICAL BUILDING SHALL BE A PRECAST CONCRETE BUILDING AS MANUFACTURED BY OLD CASTLE PRECAST, INC. THE BUILDING DIMENSIONS SHALL BE AS REQUIRED TO ACCOMMODATE THE EQUIPMENT FURNISHED BUT NO LESS THAN MINIMUMS INDICATED ABOVE.
2. SEE STRUCTURAL DRAWING FOR FOUNDATION DETAILS.
3. INTERIOR AND EXTERIOR COLORS OF ELECTRICAL BUILDING TO BE SPECIFIED BY JEA PROJECT MANAGER
4. BUILDING SHALL BE EQUIPPED WITH 7'-0" HIGH ALUMINUM DOORS AND DOOR FRAMES, 316 STAINLESS STEEL HARDWARE, AND JEA STANDARD DOOR LOCKSETS AND KEYS.
5. BUILDING INTERIOR SHALL BE SEALED AND PAINT FINISHED. BUILDING FLOOR SHALL BE SLIP RESISTANT GRAY AND WALLS & CEILINGS SHALL BE PAINTED WHITE.
6. BUILDING EXTERIOR SHALL HAVE TWO APPLICATIONS OF THOROSEAL FINISHED WITH ONE EXPOSED OF THOROCOAT. PAINT.

PRECAST CONCRETE ELECTRICAL BUILDING GENERAL DESCRIPTION AND RATINGS:

STRUCTURAL:	
OUTSIDE DIMENSION:	28'-0" LONG x 11'-8" WIDE x 10'-5"
HIGH FLOOR LOAD RATING:	250 PSF ROOF LOAD RATING: 65 PSF
WIND LOAD RATING:	150 MPH, EXP "C"
BULLET RESISTANCE:	UL752 LEVEL 4
SEISMIC ZONE:	ZONE 4
TIE DOWN KIT:	BRACKETS AND BOLTS. PROVIDED BY MANUFACTURER AS REQUIRED BY WIND LOAD
FINISHES:	
EXTERIOR WALLS:	EXPOSED AGGREGATE
INTERIOR WALLS:	1/8" FRP MOUNTED ON 1/2" PLYWOOD. WHITE PAINT
INSULATION:	MIN R-15 ON WALLS AND R-22 ON CEILING FLOOR: PREPARED, PRIMED AND FINISHED. SLIP RESISTANT GRAY
COLOR ROOFING:	WHITE ELASTOMERIC COATING. SLOPED SO CENTER RIDGE LINE IS AT LEAST ONE INCH ABOVE SIDES
DOORS AND OPENINGS:	
DOORS:	SEE FLOOR PLAN. 1 3/4" THICK ALUMINUM
LOCKS:	JEA STANDARD LOCKSETS, INTERIOR PANIC BARS
HARDWARE:	ALL HARDWARE AND WEATHER STRIP SHALL BE 316 STAINLESS STEEL
DOOR HOOD:	DOOR DRIP CAPS - 2.5" WIDE
FLOOR:	PREPARED, PRIMED AND FINISHED SLIP RESISTANT GRAY COLOR
OPENINGS:	FLOOR AND WALL BLOCK-OUTS PER FLOOR PLAN

PREFABRICATED CONCRETE ENCLOSURE SIDE ELEVATION

PLATE S-53B

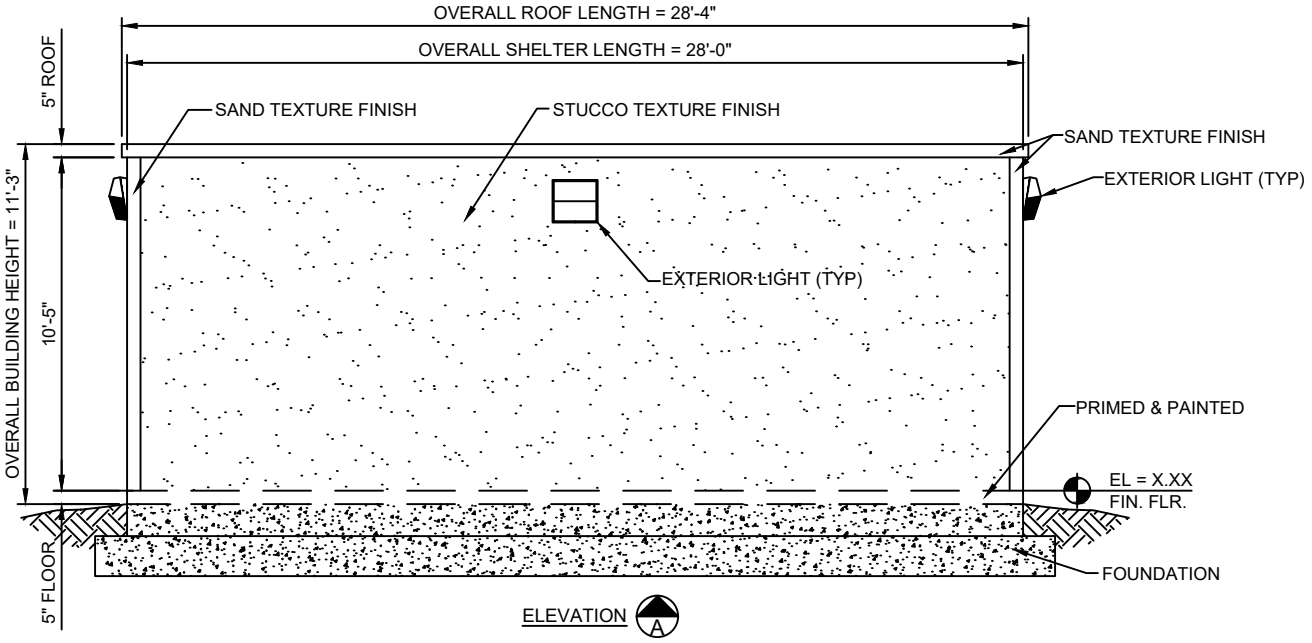

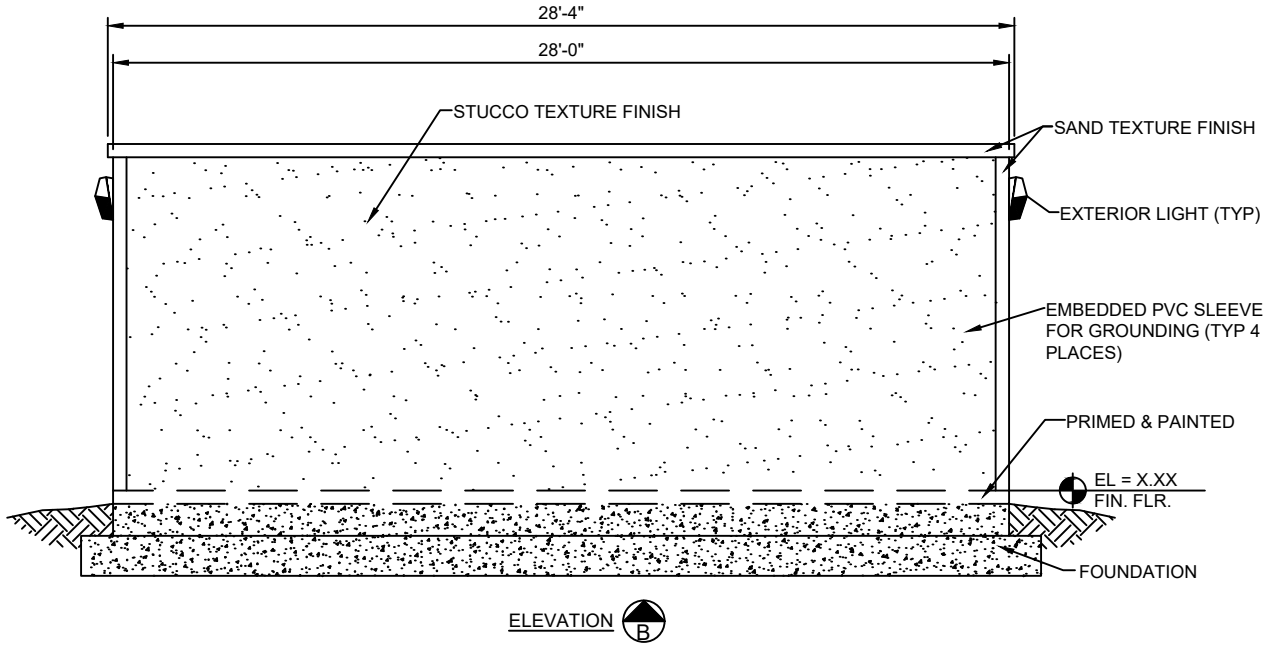

SEE PLATE 53A FOR PLAN AND NOTES

PREFABRICATED CONCRETE ENCLOSURE FRONT & REAR ELEVATION

PLATE S-53C

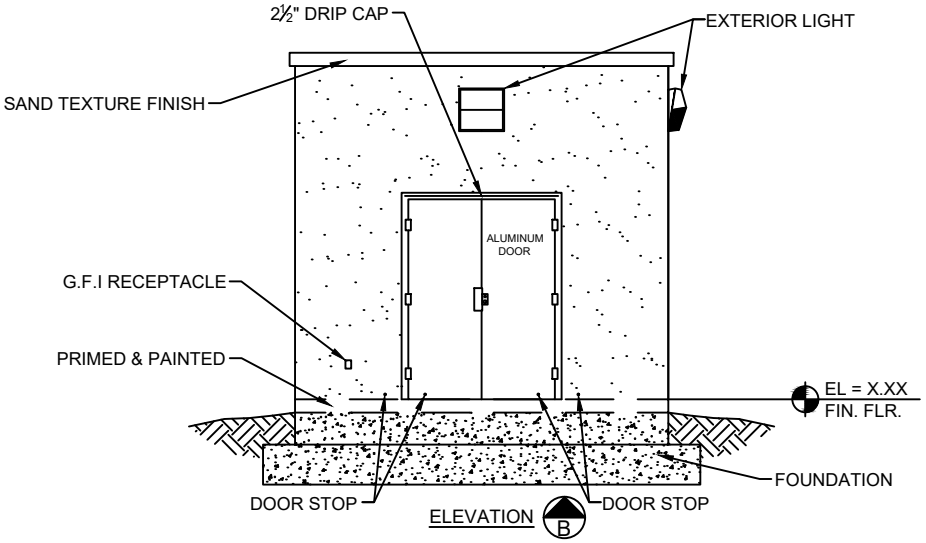

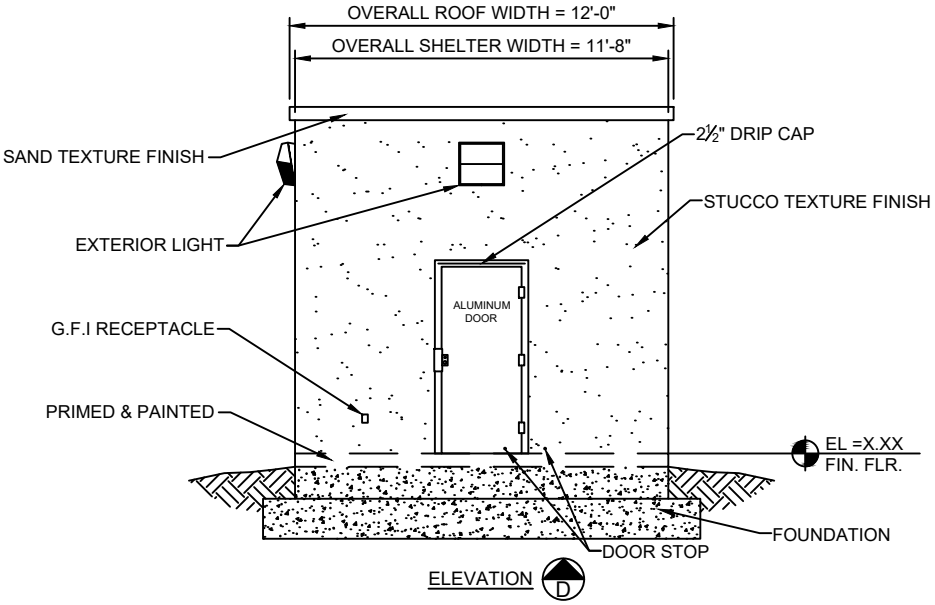

SEE PLATE 53A FOR PLAN AND NOTES

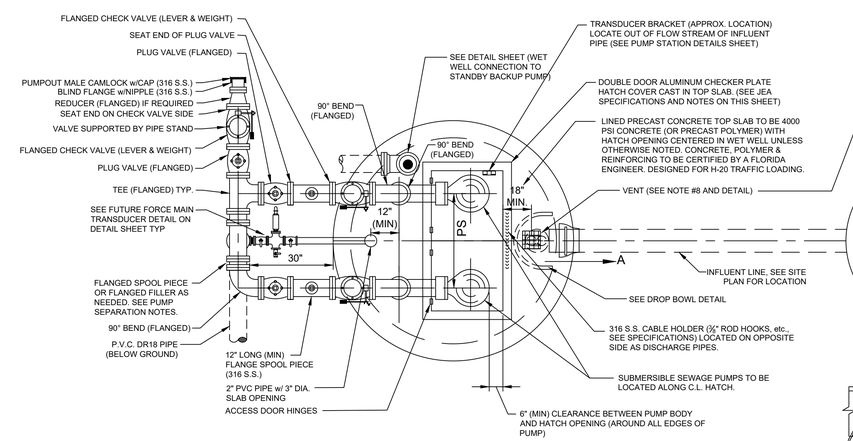

VENT DETAIL (NOTE # 8)

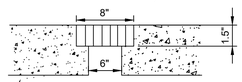

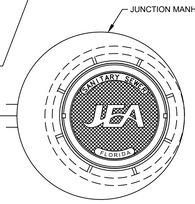

CHAIN HOOK AND RAIL BRACKET

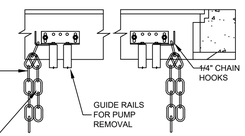

CABLE HOOK

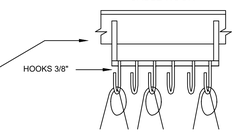

PLAN

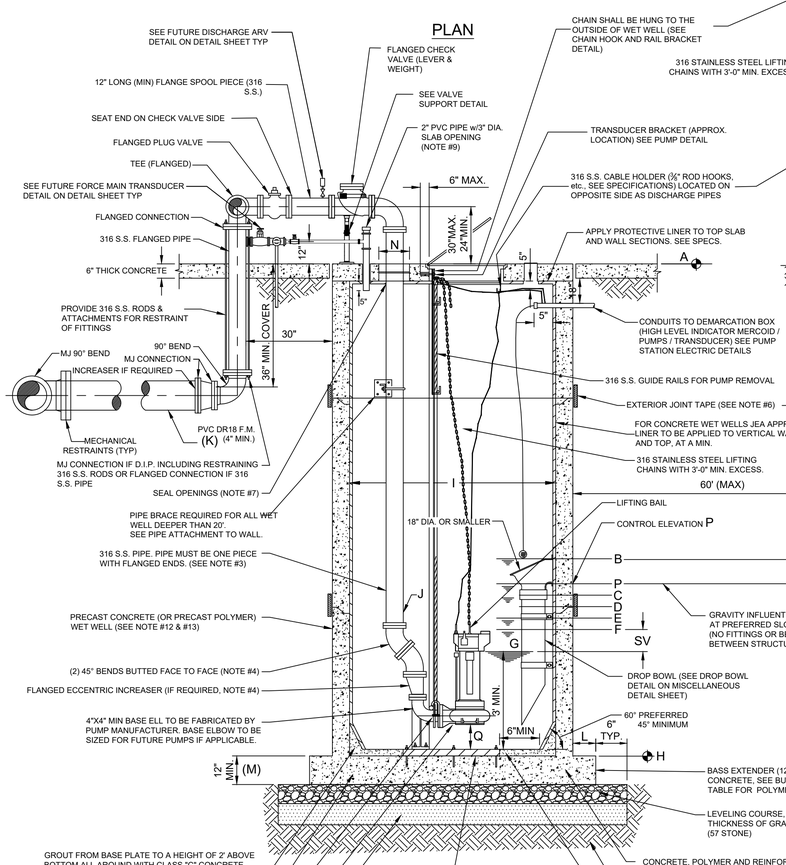

SECTION "A-A"

WET WELL SECTION

NOT TO SCALE

PUMP STATION INFORMATION
SCHEDULE OF ELEVATIONS

PUMP STATION STREET ADDRESS	TOP ELEV (NOTE 9)	MERCOID LEVEL	ALARM ELEVATION	LEFT BLANK	LAG PUMP ON ELEVATION	LEAD PUMP ON ELEVATION	PUMP OFF ELEVATION (NOTE #1)	BOTTOM ELEVATION (NOTE #5)	WET WELL DIA.	DISCHARGE PIPE DIA.	DISCHARGE F.M. DIA.	BASE EXTENDER	BOTTOM SLAB THICKNESS (INCHES)	PER HOLE DIA. (SEE NOTES)	CONTROL ELEVATION	PUMP SUCTION CLEARANCE (INCHES)	SITE FLOOD ELEVATION (DESIGN NOTE 10)	INFLUENT SIZE	HATCH SIZE (SEE TABLE BELOW)
	A	B	C	D	E	F	G	H	I	J	K	L	M	N	P	Q	R	S	
	R + 1.0	P + 0.5'	P - 0.5'	---	P - 1.0'	P - 1.5'	F - SV	G - 3'	---	---	---	---	---	---	---	---	---	---	---
	---	---	---	---	---	---	---	---	---	---	---	---	---	---	---	---	---	---	
	ALL PUMPS																		

PUMP MANUFACTURER	WILO/EMU	FLYGT	HYDROMATIC	KSB
MODEL	---	---	---	---
IMPELLER	---	---	---	---
PUMP DISCHARGE	---	---	---	---
MOTOR (RPM)	---	---	---	---
HORSEPOWER (HP)	---	---	---	---
PHASE/VOLT/AMPS (NOTE#3)	---	---	---	---
AIC (SEE NOTE #4)	---	---	---	---
DESIGN POINT (GPM) @ TDH (FT)	---	---	---	---
RUNOUT POINT (GPM) @ TDH (FT)	---	---	---	---
EMERGENCY MAIN	---	---	---	---
NORMAL SERVICE MAIN	---	---	---	---
CB #1 TO PUMP NO. 1	---	---	---	---
CB #2 TO PUMP NO. 2	---	---	---	---
CONTROL PANEL MCB	---	---	---	---
STARTER (SIZE & TYPE)	---	---	---	---
ELECTRIC SERVICE (TYPE & SIZE)	---	---	---	---

PUMP STATION INFORMATION NOTES:

1. "SV" = STORAGE VOLUME PER DESIGN ENGINEER AND SHALL BE DESIGNED FOR 12 MINUTE CYCLE TIME, MINIMUM STORAGE DEPTH SHALL BE 24".
2. IF PUMP MANUFACTURER REQUIRES A GREATER SEPARATION, THAT SEPARATION SHALL BE USED WITH THE ADDITION OF FLANGED FILLERS OR SPOOL PIECES. THE DIFFERENT SEPARATION MUST BE APPROVED BY JEA PRIOR TO CONSTRUCTION AND SHALL BE PROVIDED AT NO ADDITIONAL COST TO JEA.
3. ALL PUMP MOTORS SHALL BE 3 PHASE.
4. AMPERE INTERRUPTING CAPACITY (AIC): CONTACT THE ELECTRICAL UTILITY COMPANY FOR THIS DATA IF AVAILABLE.
5. A MANUAL TRANSFER SWITCH SHALL BE PROVIDED.

POLYMER CONCRETE FLOATATION COLLARS

DEPTH 0-10FT			DEPTH 11-15FT		DEPTH 16-20FT		DEPTH 21-30FT	
WET WELL I.D.	MIN BASE EXTENDER (IN)	MIN WEIGHT OF TOTAL STRUCTURE (LBS)	MIN BASE EXTENDER (IN)	MIN WEIGHT OF TOTAL STRUCTURE (LBS)	MIN BASE EXTENDER (IN)	MIN WEIGHT OF TOTAL STRUCTURE (LBS)	MIN BASE EXTENDER (IN)	MIN WEIGHT OF TOTAL STRUCTURE (LBS)
8'-0"	3	35600	3	37600	2	46000	—	5200
10'-0"	5	57580	5	75000	5	78700	3	91100
12'-0"	8	82900	8	113200	8	134500	7	139000

DISCHARGE PIPE DATA (WITHIN WET WELL)

PIPE SIZE	PIPE HOLE DIA.	PUMP SEPARATION	MIN PUMPOUT SIZE	HATCH SIZE (MIN.)
(J)	(N)	(PS)	(PO)	
4"	10"	26"	4"	42"x48"
6"	12"	32"	6"	42"x60"
FREE STANDING PUMP OUT FOR PIPE SIZES GREATER THAN 6"				
8"	15"	36"	8"	---
10"	17"	44"	10"	---
12"	20"	48"	12"	---
14" & LARGER	-	-	14" & LARGER	---

CONCRETE WET WELL DIMENSIONS

WET WELL I.D.	WALL THICKNESS (MIN)	TOP SLAB THICKNESS (MIN)
8'-0"	0'-9"	0'-10"
10'-0"	1'-0"	1'-0"
12'-0"	1'-0"	1'-0"

POLYMER WET WELL DIMENSIONS

WET WELL I.D.	WALL THICKNESS (MIN)	TOP SLAB THICKNESS (MIN)
8'-0"	0'-6"	0'-10"
10'-0"	0'-6 1/2"	0'-10"
12'-0"	0'-7"	1'-0"

MCC PANEL

THE COMBINED MOTOR CONTROL AND RTV PANEL SHALL BE AS NOTED BELOW. CONTRACTOR SHALL SUBMIT APPLICABLE SHOP DRAWING PACKAGE.SEE JEA.COM FOR DETAILS.

- ☐ FIXED SPEED PANEL: 240/120 VOLT, 3 PHASE, OPEN DELTA, FULL VOLTAGE MOTOR STARTING, 15 STARTS PER HOUR
- ☐ FIXED SPEED PANEL:: 480 VOLT, 3 PHASE, FULL VOLTAGE MOTOR STARTING, 15 STARTS PER HOUR
- ☐ 1P-3P VFD PANEL:: 480/277 VOLT, 3 PHASE, WYE, FULL VOLTAGE MOTOR STARTING, 15 STARTS PER HOUR
- ☐ 3P VFD PANEL:: 480/277 VOLT, 3 PHASE, WYE, REDUCED VOLTAGE MOTOR STARTING, 10 STARTS PER HOUR

MANUAL TRANSFER SWITCH

☐	JTD364SSMCQC	200 AMP
☐	JTD365SSMCQC	400 AMP

GENERAL NOTES:

1. ALL WORK SHALL COMPLY WITH SPECIFICATIONS, SECTION 433, "SUBMERSIBLE SEWAGE PUMPING STATIONS" IN JEA WATER AND SEWER STANDARDS MANUAL.
2. PENETRATION SOIL BORING INFORMATION, TAKEN AT WET WELL LOCATION, SHALL BE SUBMITTED PRIOR TO DESIGN SUBMITTAL. SOIL BORING SHALL BE A MINIMUM OF 15' DEEPER THAN WET WELL BOTTOM OR UNTIL SUITABLE SOIL IS LOCATED UP TO A MAXIMUM OF 25' BELOW WET WELL BOTTOM.
3. ALL PIPING WITHIN AND EXTERNAL OF THE WET WELL SHALL BE FLANGED SCHEDULE 40, 316 STAINLESS STEEL. BUTT WELDING OF ANY PIPING (EXCEPT FOR THE EMERGENCY SUCTION PIPE IN THE WET WELL) IS NOT ALLOWED.
4. ALL DUCTILE IRON FITTINGS (90s, 45s, TEES ETC.) WITHIN AND EXTERNAL OF THE WET WELL SHALL BE FLANGED EPOXY LINED.
5. ALL NUTS, BOLTS AND ACCESSORIES WITHIN AND EXTERNAL OF THE WET WELL SHALL BE 316 STAINLESS STEEL AND SHALL BE COATED WITH A "NEVER SEIZE" TYPE COATING.
6. ALL EXTERIOR JOINTS OF PRECAST CONCRETE AND PRECAST POLYMER WET WELLS AND MANHOLES SHALL BE SEALED WITH A 18" WIDE RUBBERIZED ASPHALT MEMBRANE TAPE. (SEE JEA SPEC).
7. THE VOID AREAS BETWEEN TOP SLAB AND FORCE MAIN PIPE SHALL BE SEALED W/EUCOLASTIC BY EUCLID CITEM CO. OR APPROVED EQUAL SEAL. ALL OTHER OPENINGS IN CONCRETE TOP WITH NON-SHRINK GROUT, EXCEPT AS DESCRIBED IN NOTE #6. PROVIDE INSECT SCREEN SECURED TO TOP.
8. PROVIDE 6" x 6" OPENING THROUGH THE CONCRETE TOP OF THE WET WELL AND INSERT 8" x 8" x 1 $\frac{1}{2}$" THICK ALUMINUM GRATE VENT CONSTRUCTED OF 1 $\frac{1}{2}$" WIDE x $\frac{1}{8}$" MATERIAL. .
9. PROVIDE 2" PIPE (PVC, SCH. 80) THROUGH CONCRETE TOP WITH CAPPED TOP AD OPEN END BOTTOM. SEAL AROUND CONCRETE TOP WITH NON-SHRINK GROUT. IN THE FUTURE, THIS PIPE WILL BE UTILIZED FOR THE CONSTRUCTION OF THE AIR-RELEASE VALVE PIPING. EXTEND 18" ABOVE THE TOP OF WET WELL.
10. SITE GRADE IS 6" (MIN) BELOW TOP ELEVATION OF PUMP STATION SLAB.
11. IN SILTS, CLAY OR HIGHLY ORGANIC SOILS (FINE-GRAINED SOILS INCLUDING SOIL GROUPS ML, CL, OL, MH, CH, OH AND PT) THE SOILS SHALL BE OVER-EXCAVATED AN ADDITIONAL 12" (AT A MIN.) AND BACKFILL WITH GRANULAR BACKFILL (57 STONE).
12. PRECAST CONCRETE WET WELL SHALL MEET A.S.T.M. C-478 STANDARD, ENTIRE INSIDE SURFACE OF WET WELL & TOP SLAB SHALL BE LINED WITH APPROVED LINER. LINER INSTALLER MUST BE CERTIFIED BY LINER MANUFACTURER. SUBMIT CERTIFICATION WITH SHOP DRAWING SUBMITTAL. SEE SPECIFICATIONS. THE EXCAVATED HOLE SHALL BE DRY (DE-WATERED) DURING THE WET WELL INSTALLATION. (SEE WET WELL DIMENSIONS TABLE)
13. PRECAST POLYMER CONCRETE WET WELL SHALL MEET JEA POLYMER PRECAST STANDARD. THE EXCAVATED HOLE SHALL BE DRY (DE-WATERED) DURING THE WET WELL INSTALLATION. (SEE WET WELL DIMENSIONS TABLE)
14. SEE REFERENCE FACILITIES STANDARDS FOR GENERATOR, ATS, BACKFLOW, BOLLARDS AND PAVEMENT SPECIFICATIONS. (HTTPS://WWW.JEA.COM/ENGINGEERING_AND_CONSTRUCTION/FACILITIES/)
15. SEE JEA STANDARD SHEETS (AVAILABLE AT JEA.COM) FOR CONSTRUCTION DETAILS OF SPECIFIC COMPONENTS, INCLUDING ELECTRICAL.

DESIGN NOTES:

1. ENGINEER SHALL USE THIS PLAN AS A BASIS OF DESIGN FOR SITE SPECIFIC PUMP STATION. THESE NOTES TO BE ERASED ON COMPLETED DRAWING.
2. WET WELL SIZE: PUMP STATION 8'-0" I.D. MIN., 27' DEEP MAX.
3. MINIMUM FORCE MAIN FLOW RATE: 4" DIAMETER @ 80 GPM ALL GREATER SIZES SHALL BE DESIGNED FOR FLOW VELOCITY BETWEEN 2FPS AND 5FPS
4. MINIMUM ELECTRIC SERVICE SIZE: 240 VOLT, 200 AMP., 3 PHASE, 4 WIRE
5. MINIMUM CONCRETE PAD SIZE: 40'x40'
6. MINIMUM JUNCTION MANHOLE SIZE: 5'-0" I.D. LOCATE ON SAME SIDE OF DRIVEWAY AS PUMP-OUT CONNECTION.
7. IT IS THE ENGINEER'S RESPONSIBILITY TO DESIGN THE SITE TO MEET FUNCTIONALITY AND SITE SPECIFIC CONDITIONS. HOWEVER, THE ENGINEER SHALL MAKE EVERY EFFORT TO CONFORM TO THE STANDARD DRAWING SHOWN HERE.
8. HOW TO DETERMINE TOWER OR POLE FOR SCADA (SEE ALSO SPEC SECTION 433): TO DETERMINE IF A POLE OR TOWER IS REQUIRED A RADIO PATH STUDY MUST FIRST BE CONDUCTED. THE RADIO PATH STUDY MUST BE DONE USING THE SAME TYPE OF RADIO USED IN THE SCADA PANEL AND MUST BE A MINIMUM OF -86DB RSSI. IF THE HEIGHT OF THE MINIMUM -86DB RSSI LEVEL IS LESS THAN OR EQUAL TO 20 FEET THEN A 20 FOOT POLE CAN BE USED. IF THE HEIGHT REQUIREMENTS ARE OVER 20 FEET THEN A TOWER MUST BE USED.
9. THE PUMP STATION TOP ELEVATION SHALL BE SET AT A MINIMUM OF 1' ABOVE THE "R" ELEVATION. THE "R" ELEVATION SHALL BE EQUAL TO THE DESIGN HIGH WATER LEVEL OR THE 100 YEAR FLOOD ELEVATION, WHICHEVER IS HIGHER.
10. THE TOP ELEVATION OF JUNCTION MAN HOLE SHALL MATCH THE TOP ELEVATION OF NEAREST ADJACENT CONCRETE STRUCTURE (PUMP STATION SLAB, DRIVE WAY OR CURB).

CONSTRUCTION NOTES:

1. SLOPE SITE CONCRETE 1" PER 8' TO DRAIN TOWARDS STREET OR OTHER ADJACENT CITY OR JEA OWNED DRAINAGE FACILITY.
2. CONTRACTOR MUST MAINTAIN LANDSCAPING UNTIL FINAL ACCEPTANCE AND SUPPLY ONE (1) YEAR WARRANTY FROM NURSERY SUPPLYING PLANTS FROM DATE OF ACCEPTANCE.
3. DEMARCATION BOX SHALL BE PLACED AS CLOSE AS POSSIBLE TO WET WELL. IT SHALL BE PLACED AT LEAST 3' FROM WET WELL HATCH AND AT LEAST 5' FROM VENTS. IT SHALL BE PLACED SO AS NOT TO INTERFERE WITH ACCESS TO THE WET WELL OR DISCHARGE APPARATUS, AND DOOR SHALL FACE AWAY FROM WET WELL.
4. SEE GROUNDING PLAN FOR ELECTRICAL SERVICE GROUNDING REQUIREMENTS (SEE GROUNDING DETAIL SHEET).
5. CONTRACTOR MUST KEEP COMPANY SIGN AND PHONE NUMBER ON FENCE UNTIL STATION ACCEPTED.
6. TRANSFORMERS SHALL BE LOCATED ON THE SAME SIDE OF PROPERTY AS METER CAN AND ELECTRICAL PANELS.
7. WET WELL LID SHALL UTILIZE STAPLE ASSEMBLY FOR LOCKING THE WET WELL.

SITE SPECIFIC

NO.	BY	DATE	REVISIONS
4.			
3.			
2.			
1.	LLOYD HENRY	9/25/2018	MANUAL TRANSFER SWITCH TABLE

DESIGN ENGINEER
FLORIDA REGISTRATION NO.

DESIGNER:
DRAWN BY:
DATE:
CHECKED BY:
DATE:

JEA Building Community.com

JEA STANDARD
CLASS ONE PUMP STATION
FOR PEAK FLOWS BETWEEN 0 TO 440 GPM
PLAN AND SECTION

NO. SHEETS
PROJ. NO.
SHEET NO.
DATE:
DRAWING NO.
SCALE:

G:\Services\Shared\AutoCAD\henrlq\Water Standards\2021\PUMP STATION SITE SPECIFIC.dwg Current Layout Tab = CLASS ONE PUMP STATION DATA Thu Feb 25, 2021 – 15:14

Xrefs Attached=

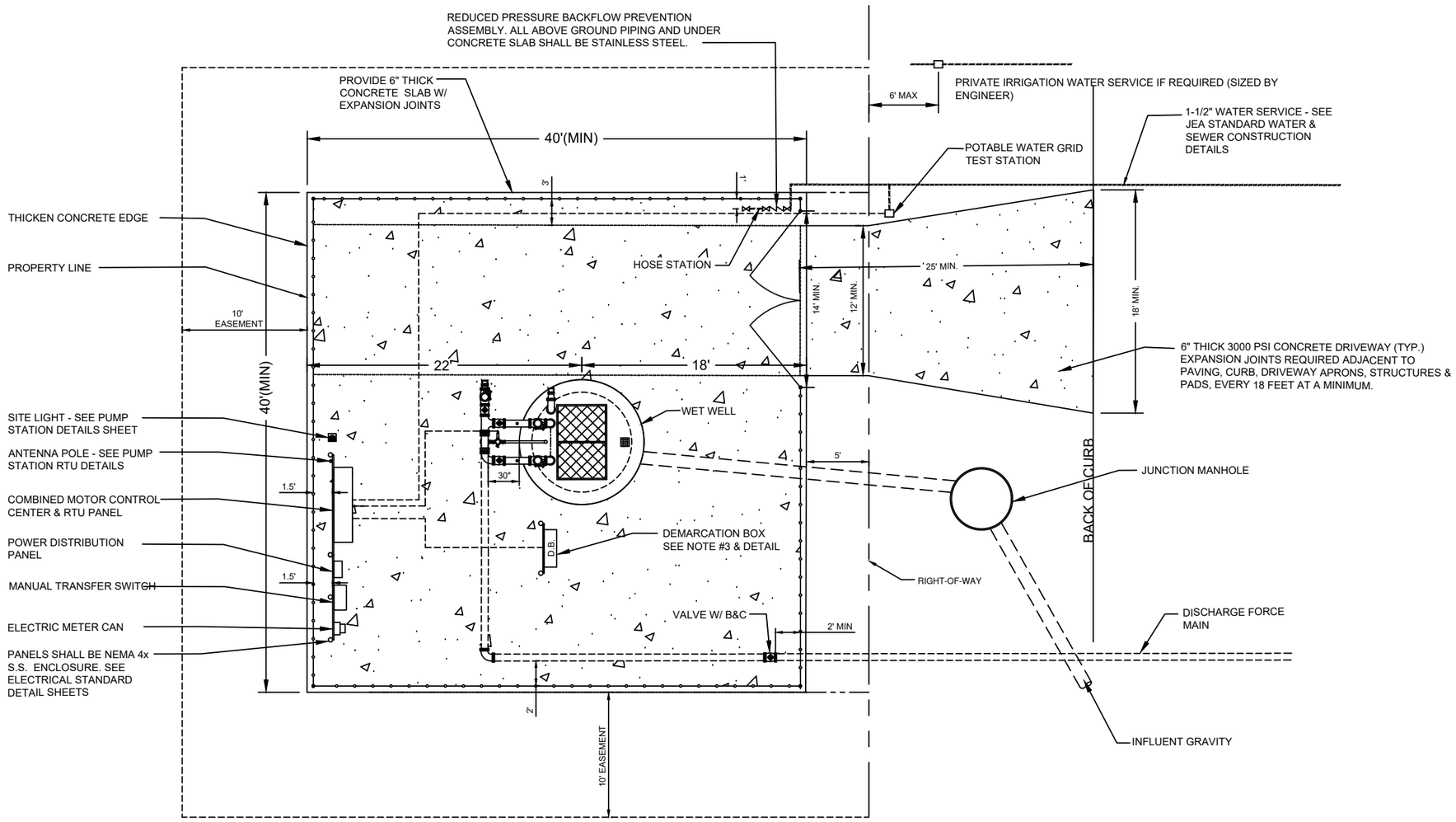

SITE SPECIFIC

NO.	BY	DATE	REVISIONS
4.			
3.			
2.			
1.	LLOYD HENRY	8/25/2016	UPDATED ELECTRICAL PANELS

DESIGN ENGINEER

FLORIDA REGISTRATION NO.

DESIGNER:
DRAWN BY:
DATE:
CHECKED BY:
DATE:

JEA Building Community

JEA STANDARD
CLASS ONE PUMP STATION
FOR PEAK FLOWS BETWEEN 0 TO 440 GPM
PLAN AND SECTION

PROJ. NO.
DATE:
SCALE: 1"=10'

NO. SHEETS
SHEET NO.
DRAWING NO.

G:\Services\Shared\AutoCAD\henrlq\Water Standards\2021\PUMP STATION SITE SPECIFIC.dwg Current Layout Tab = CLASS ONE PUMP STATION SITE PLAN Thu Feb 25, 2021 - 15:14

Xrefs Attached=

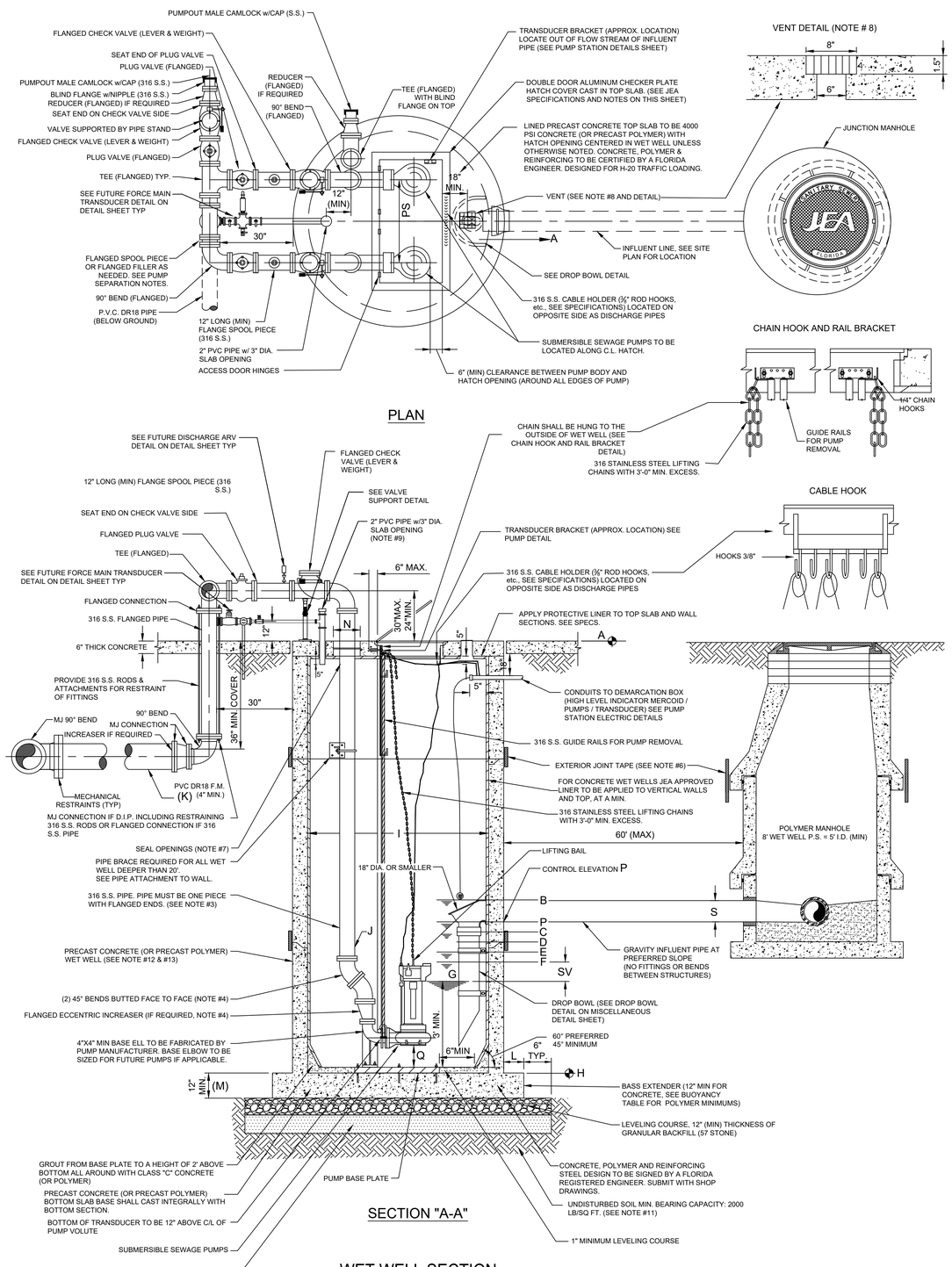

PUMP STATION INFORMATION
SCHEDULE OF ELEVATIONS

PUMP STATION STREET ADDRESS	TOP ELEV (NOTE 9)	MERCOID LEVEL	ALARM ELEVATION	LEFT BLANK	LAG PUMP ON ELEVATION	LEAD PUMP ON ELEVATION	PUMP OFF ELEVATION (NOTE #1)	BOTTOM ELEVATION (NOTE #5)	WET WELL DIA.	DISCHARGE PIPE DIA.	DISCHARGE F.M. DIA.	BASE EXTENDER	BOTTOM SLAB THICKNESS (INCHES)	PER HOLE DIA. (SEE NOTES)	CONTROL ELEVATION	PUMP SUCTION CLEARANCE (INCHES)	SITE FLOOD ELEVATION (DESIGN NOTE 10)	INFLUENT SIZE	HATCH SIZE (SEE TABLE BELOW)
	A	B	C	D	E	F	G	H	I	J	K	L	M	N	P	Q	R	S	
	R + 1.0	P + 0.5'	P - 0.5'	---	P - 1.0'	P - 1.5'	F - SV	G - 3'	---	---	---	---	---	---	---	---	---	---	---
	---	---	---	---	---	---	---	---	---	---	---	---	---	---	---	---	---	---	

	ALL PUMPS			
PUMP MANUFACTURER	WILO/EMU	FLYGT	HYDROMATIC	KSB
MODEL	---	---	---	---
IMPELLER	---	---	---	---
PUMP DISCHARGE	---	---	---	---
MOTOR (RPM)	---	---	---	---
HORSEPOWER (HP)	---	---	---	---
PHASE/VOLT/AMPS (NOTE#3)	---	---	---	---
AIC (SEE NOTE #4)	---	---	---	---
DESIGN POINT (GPM) @ TDH (FT)	---	---	---	---
RUNOUT POINT (GPM) @ TDH (FT)	---	---	---	---
EMERGENCY MAIN	---	---	---	---
NORMAL SERVICE MAIN	---	---	---	---
CB #1 TO PUMP NO. 1	---	---	---	---
CB #2 TO PUMP NO. 2	---	---	---	---
CONTROL PANEL MCB	---	---	---	---
STARTER (SIZE & TYPE)	---	---	---	---
ELECTRIC SERVICE (TYPE & SIZE)	---	---	---	---

PUMP STATION INFORMATION NOTES:

1. "SV" = STORAGE VOLUME PER DESIGN ENGINEER AND SHALL BE DESIGNED FOR 12 MINUTE CYCLE TIME, MINIMUM STORAGE DEPTH SHALL BE 24".
2. IF PUMP MANUFACTURER REQUIRES A GREATER SEPARATION, THAT SEPARATION SHALL BE USED WITH THE ADDITION OF FLANGED FILLERS OR SPOOL PIECES. THE DIFFERENT SEPARATION MUST BE APPROVED BY JEA PRIOR TO CONSTRUCTION AND SHALL BE PROVIDED AT NO ADDITIONAL COST TO JEA.
3. ALL PUMP MOTORS SHALL BE 3 PHASE.
4. AMPERE INTERRUPTING CAPACITY (AIC): CONTACT THE ELECTRICAL UTILITY COMPANY FOR THIS DATA IF AVAILABLE.
5. A MANUAL TRANSFER SWITCH SHALL BE PROVIDED.

POLYMER CONCRETE FLOATATION COLLARS

DEPTH 0-10FT			DEPTH 11-15FT		DEPTH 16-20FT		DEPTH 21-30FT	
WET WELL I.D.	MIN BASE EXTENDER (IN)	MIN WEIGHT OF TOTAL STRUCTURE (LBS)	MIN BASE EXTENDER (IN)	MIN WEIGHT OF TOTAL STRUCTURE (LBS)	MIN BASE EXTENDER (IN)	MIN WEIGHT OF TOTAL STRUCTURE (LBS)	MIN BASE EXTENDER (IN)	MIN WEIGHT OF TOTAL STRUCTURE (LBS)
8'-0"	3	35600	3	37600	2	46000	—	5200
10'-0"	5	57580	5	75000	5	78700	3	91100
12'-0"	8	82900	8	113200	8	134500	7	139000

DISCHARGE PIPE DATA (WITHIN WET WELL)

PIPE SIZE	PIPE HOLE DIA.	PUMP SEPARATION	MIN PUMPOUT SIZE	HATCH SIZE (MIN.)
(J)	(N)	(PS)	(PO)	
4"	10"	26"	4"	42"x48"
6"	12"	32"	6"	42"x60"
FREE STANDING PUMP OUT FOR PIPE SIZES GREATER THAN 6"				
8"	15"	36"	8"	---
10"	17"	44"	10"	---
12"	20"	48"	12"	---
14" & LARGER	-	-	14" & LARGER	---

MCC PANEL

THE COMBINED MOTOR CONTROL AND RTV PANEL SHALL BE AS NOTED BELOW. CONTRACTOR SHALL SUBMIT APPLICABLE SHOP DRAWING PACKAGE,SEE JEA.COM FOR DETAILS.

- ☐ FIXED SPEED PANEL: 240/120 VOLT, 3 PHASE, OPEN DELTA, FULL VOLTAGE MOTOR STARTING, 15 STARTS PER HOUR
- ☐ FIXED SPEED PANEL:: 480 VOLT, 3 PHASE, FULL VOLTAGE MOTOR STARTING, 15 STARTS PER HOUR
- ☐ 1P-3P VFD PANEL:: 480/277 VOLT, 3 PHASE, WYE, FULL VOLTAGE MOTOR STARTING, 15 STARTS PER HOUR
- ☐ 3P VFD PANEL:: 480/277 VOLT, 3 PHASE, WYE, REDUCED VOLTAGE MOTOR STARTING, 10 STARTS PER HOUR

CONCRETE WET WELL DIMENSIONS

WET WELL I.D.	WALL THICKNESS (MIN)	TOP SLAB THICKNESS (MIN)
8'-0"	0'-9"	0'-10"
10'-0"	1'-0"	1'-0"
12'-0"	1'-0"	1'-0"

POLYMER WET WELL DIMENSIONS

WET WELL I.D.	WALL THICKNESS (MIN)	TOP SLAB THICKNESS (MIN)
8'-0"	0'-6"	0'-10"
10'-0"	0'-6 1/2"	0'-10"
12'-0"	0'-7"	1'-0"

GENERATOR

MANUFACTURER	
MODEL	
KW	

MANUAL TRANSFER SWITCH

☐ JTD364SSMCQC	200 AMP
☐ JTD365SSMCQC	400 AMP

GENERAL NOTES:

1. ALL WORK SHALL COMPLY WITH SPECIFICATIONS, SECTION 433, "SUBMERSIBLE SEWAGE PUMPING STATIONS" IN JEA WATER AND SEWER STANDARDS MANUAL.
2. PENETRATION SOIL BORING INFORMATION, TAKEN AT WET WELL LOCATION, SHALL BE SUBMITTED PRIOR TO DESIGN SUBMITTAL. SOIL BORING SHALL BE A MINIMUM OF 15' DEEPER THAN WET WELL BOTTOM OR UNTIL SUITABLE SOIL IS LOCATED UP TO A MAXIMUM OF 25' BELOW WET WELL BOTTOM.
3. ALL PIPING WITHIN AND EXTERNAL OF THE WET WELL SHALL BE FLANGED SCHEDULE 40, 316 STAINLESS STEEL. BUTT WELDING OF ANY PIPING (EXCEPT FOR THE EMERGENCY SUCTION PIPE IN THE WET WELL) IS NOT ALLOWED.
4. ALL DUCTILE IRON FITTINGS (90s, 45s, TEES ETC.) WITHIN AND EXTERNAL OF THE WET WELL SHALL BE FLANGED EPOXY LINED.
5. ALL NUTS, BOLTS AND ACCESSORIES WITHIN AND EXTERNAL OF THE WET WELL SHALL BE 316 STAINLESS STEEL AND SHALL BE COATED WITH A "NEVER SEIZE" TYPE COATING.
6. ALL EXTERIOR JOINTS OF PRECAST CONCRETE AND PRECAST POLYMER WET WELLS AND MANHOLES SHALL BE SEALED WITH A 18" WIDE RUBBERIZED ASPHALT MEMBRANE TAPE. (SEE JEA SPEC).
7. THE VOID AREAS BETWEEN TOP SLAB AND FORCE MAIN PIPE SHALL BE SEALED W/EUCOLASTIC BY EUCLID CITEM CO. OR APPROVED EQUAL SEAL. ALL OTHER OPENINGS IN CONCRETE TOP WITH NON-SHRINK GROUT, EXCEPT AS DESCRIBED IN NOTE #6. PROVIDE INSECT SCREEN SECURED TO TOP.
8. PROVIDE 6" x 6" OPENING THROUGH THE CONCRETE TOP OF THE WET WELL AND INSERT 8" x 8" x 1 ½" THICK ALUMINUM GRATE VENT CONSTRUCTED OF 1 ½" WIDE x ⅛" MATERIAL. .
9. PROVIDE 2" PIPE (PVC, SCH. 80) THROUGH CONCRETE TOP WITH CAPPED TOP AD OPEN END BOTTOM. SEAL AROUND CONCRETE TOP WITH NON-SHRINK GROUT. IN THE FUTURE, THIS PIPE WILL BE UTILIZED FOR THE CONSTRUCTION OF THE AIR-RELEASE VALVE PIPING. EXTEND 18" ABOVE THE TOP OF WET WELL.
10. SITE GRADE IS 6" (MIN) BELOW TOP ELEVATION OF PUMP STATION SLAB.
11. IN SILTS, CLAY OR HIGHLY ORGANIC SOILS (FINE-GRAINED SOILS INCLUDING SOIL GROUPS ML, CL, OL, MH, CH, OH AND PT) THE SOILS SHALL BE OVER-EXCAVATED AN ADDITIONAL 12" (AT A MIN.) AND BACKFILL WITH GRANULAR BACKFILL (57 STONE).
12. PRECAST CONCRETE WET WELL SHALL MEET A.S.T.M. C-478 STANDARD, ENTIRE INSIDE SURFACE OF WET WELL & TOP SLAB SHALL BE LINED WITH APPROVED LINER. LINER INSTALLER MUST BE CERTIFIED BY LINER MANUFACTURER. SUBMIT CERTIFICATION WITH SHOP DRAWING SUBMITTAL. SEE SPECIFICATIONS. THE EXCAVATED HOLE SHALL BE DRY (DE-WATERED) DURING THE WET WELL INSTALLATION. (SEE WET WELL DIMENSIONS TABLE)
13. PRECAST POLYMER CONCRETE WET WELL SHALL MEET JEA POLYMER PRECAST STANDARD. THE EXCAVATED HOLE SHALL BE DRY (DE-WATERED) DURING THE WET WELL INSTALLATION. (SEE WET WELL DIMENSIONS TABLE)
14. SEE REFERENCE FACILITIES STANDARDS FOR GENERATOR, ATS, BACKFLOW, BOLLARDS AND PAVEMENT SPECIFICATIONS. (HTTPS://WWW.JEA.COM/ENGINGEERING_AND_CONSTRUCTION/FACILITIES/)
15. SEE JEA STANDARD SHEETS (AVAILABLE AT JEA.COM) FOR CONSTRUCTION DETAILS OF SPECIFIC COMPONENTS, INCLUDING ELECTRICAL.

DESIGN NOTES:

1. ENGINEER SHALL USE THIS PLAN AS A BASIS OF DESIGN FOR SITE SPECIFIC PUMP STATION. THESE NOTES TO BE ERASED ON COMPLETED DRAWING.
2. WET WELL SIZE: PUMP STATION 8'-0" I.D. MIN., 27' DEEP MAX.
3. MINIMUM FORCE MAIN FLOW RATE: 4" DIAMETER @ 80 GPM ALL GREATER SIZES SHALL BE DESIGNED FOR FLOW VELOCITY BETWEEN 2FPS AND 5FPS
4. MINIMUM ELECTRIC SERVICE SIZE: 240 VOLT, 200 AMP., 3 PHASE, 4 WIRE
5. MINIMUM CONCRETE PAD SIZE: 40'x40'
6. MINIMUM JUNCTION MANHOLE SIZE: 5'-0" I.D. LOCATE ON SAME SIDE OF DRIVEWAY AS PUMP-OUT CONNECTION.
7. IT IS THE ENGINEER'S RESPONSIBILITY TO DESIGN THE SITE TO MEET FUNCTIONALITY AND SITE SPECIFIC CONDITIONS. HOWEVER, THE ENGINEER SHALL MAKE EVERY EFFORT TO CONFORM TO THE STANDARD DRAWING SHOWN HERE.
8. HOW TO DETERMINE TOWER OR POLE FOR SCADA (SEE ALSO SPEC SECTION 433): TO DETERMINE IF A POLE OR TOWER IS REQUIRED A RADIO PATH STUDY MUST FIRST BE CONDUCTED. THE RADIO PATH STUDY MUST BE DONE USING THE SAME TYPE OF RADIO USED IN THE SCADA PANEL AND MUST BE A MINIMUM OF -86DB RSSI. IF THE HEIGHT OF THE MINIMUM -86DB RSSI LEVEL IS LESS THAN OR EQUAL TO 20 FEET THEN A 20 FOOT POLE CAN BE USED. IF THE HEIGHT REQUIREMENTS ARE OVER 20 FEET THEN A TOWER MUST BE USED.
9. THE PUMP STATION TOP ELEVATION SHALL BE SET AT A MINIMUM OF 1' ABOVE THE "R" ELEVATION. THE "R" ELEVATION SHALL BE EQUAL TO THE DESIGN HIGH WATER LEVEL OR THE 100 YEAR FLOOD ELEVATION, WHICHEVER IS HIGHER.
10. THE TOP ELEVATION OF JUNCTION MAN HOLE SHALL MATCH THE TOP ELEVATION OF NEAREST ADJACENT CONCRETE STRUCTURE (PUMP STATION SLAB, DRIVE WAY OR CURB).

CONSTRUCTION NOTES:

1. SLOPE SITE CONCRETE 1" PER 8' TO DRAIN TOWARDS STREET OR OTHER ADJACENT CITY OR JEA OWNED DRAINAGE FACILITY.
2. CONTRACTOR MUST MAINTAIN LANDSCAPING UNTIL FINAL ACCEPTANCE AND SUPPLY ONE (1) YEAR WARRANTY FROM NURSERY SUPPLYING PLANTS FROM DATE OF ACCEPTANCE.
3. DEMARCATION BOX SHALL BE PLACED AS CLOSE AS POSSIBLE TO WET WELL. IT SHALL BE PLACED AT LEAST 3' FROM WET WELL HATCH AND AT LEAST 5' FROM VENTS. IT SHALL BE PLACED SO AS NOT TO INTERFERE WITH ACCESS TO THE WET WELL OR DISCHARGE APPARATUS, AND DOOR SHALL FACE AWAY FROM WET WELL.
4. SEE GROUNDING PLAN FOR ELECTRICAL SERVICE GROUNDING REQUIREMENTS (SEE GROUNDING DETAIL SHEET).
5. CONTRACTOR MUST KEEP COMPANY SIGN AND PHONE NUMBER ON FENCE UNTIL STATION ACCEPTED.
6. TRANSFORMERS SHALL BE LOCATED ON THE SAME SIDE OF PROPERTY AS METER CAN AND ELECTRICAL PANELS.
7. WET WELL LID SHALL UTILIZE STAPLE ASSEMBLY FOR LOCKING THE WET WELL.

SITE SPECIFIC

NO.	BY	DATE	REVISIONS
4.			
3.			
2.			
1.	LLOYD HENRY	9/25/2018	MANUAL TRANSFER SWITCH TABLE

DESIGN ENGINEER

FLORIDA REGISTRATION NO.

DESIGNED:
DRAWN BY:
DATE:
CHECKED BY:
DATE:

JEA Building Community

JEA STANDARD CLASS ONE PUMP STATION WITH GENERATOR FOR PEAK FLOWS BETWEEN 0 TO 440 GPM PLAN AND SECTION

PROJ. NO.
DATE:
SCALE:

NO. SHEETS
SHEET NO.
DRAWING NO.

G:\Services\Shared\AutoCAD\henrla\Water Standards\2021\PUMP STATION SITE SPECIFIC.dwg Current Layout Tab = CLASS ONE PUMP STATION WITH GENERATOR STATION DATA Thu Feb 25, 2021 - 15:14

Xrefs Attached=

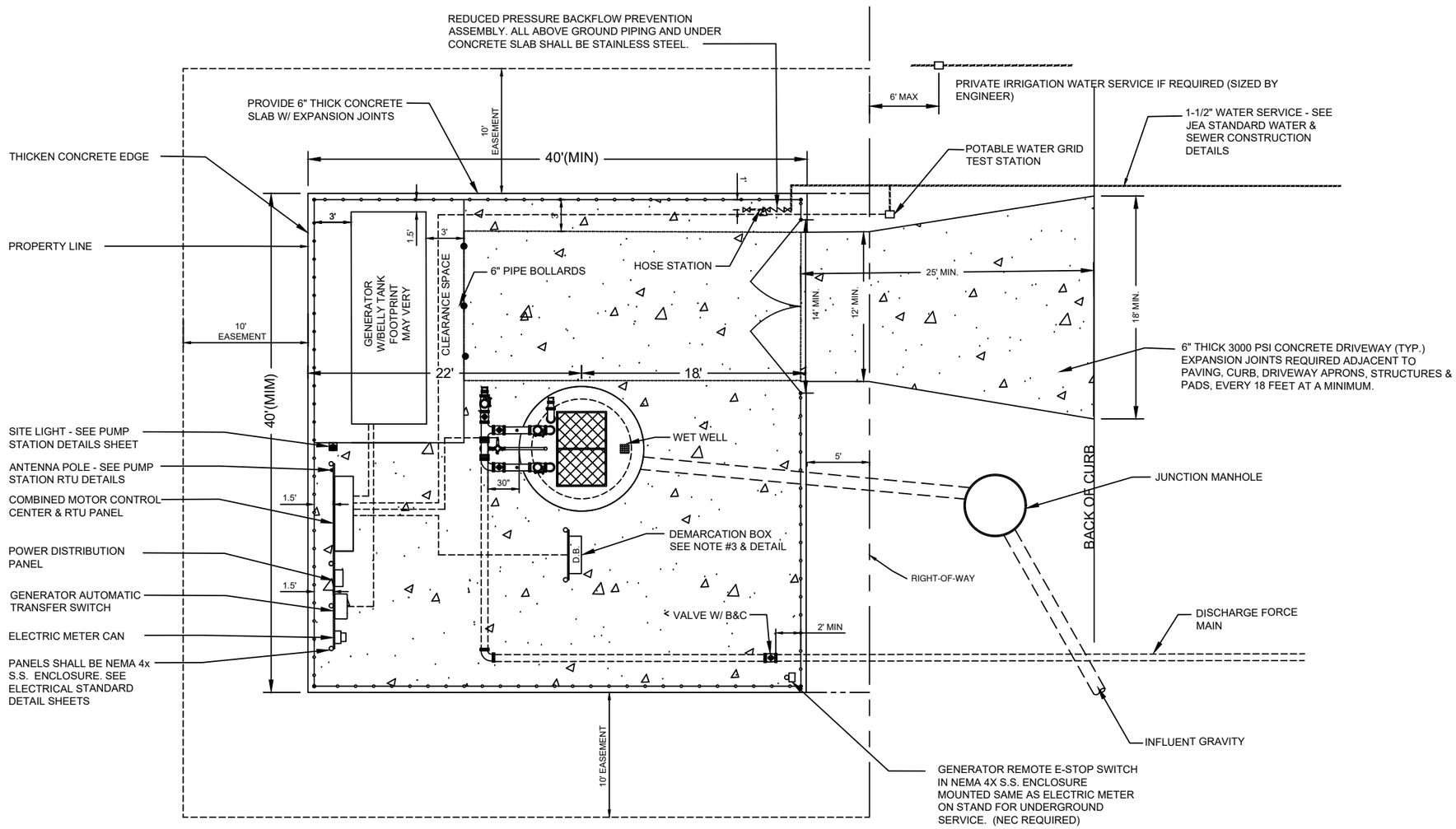

SITE SPECIFIC

NO.	BY	DATE	REVISIONS
4.			
3.			
2.			
1.	LLOYD HENRY	9/25/2018	UPDATED ELECTRICAL PANEL

DESIGN ENGINEER:
FLORIDA REGISTRATION NO.

DESIGNER:
DRAWN BY:
DATE:
CHECKED BY:
DATE:

JEA Building Community sm

JEA STANDARD CLASS ONE PUMP STATION WITH GENERATOR
FOR PEAK FLOWS BETWEEN 0 TO 440 GPM
PLAN AND SECTION

PROJ. NO.
DATE:
SCALE: 1" = 10'

NO. SHEETS
SHEET NO.
DRAWING NO.

G:\Services\Shared\AutoCAD\henrlq\Water Standards\2021\PUMP STATION SITE SPECIFIC.dwg Current Layout Tab = CLASS ONE PUMP STATION SITE PLAN WITH GENERATOR Thu Feb 25, 2021 - 15:14

Xrefs Attached=

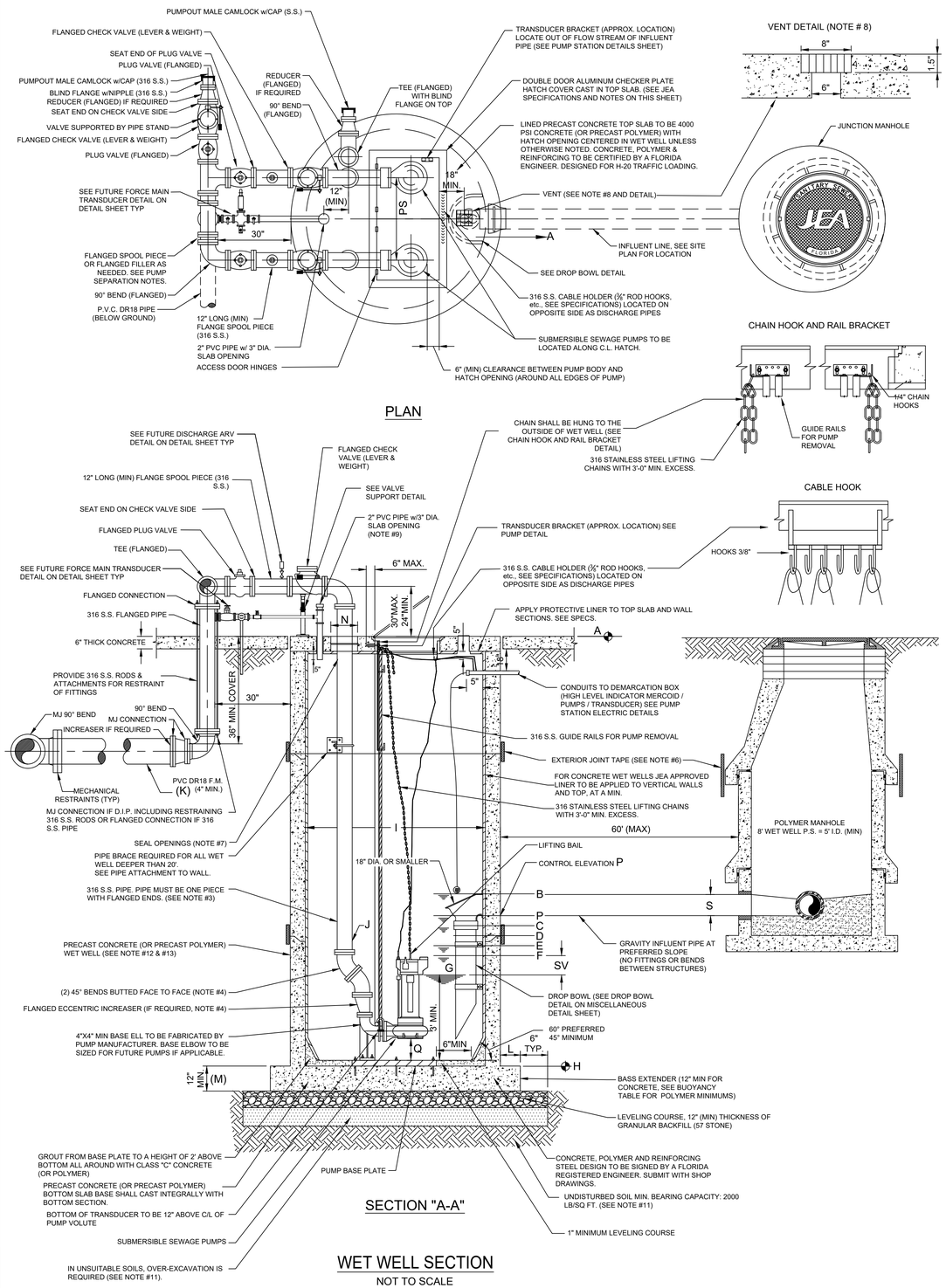

PUMP STATION INFORMATION
SCHEDULE OF ELEVATIONS

PUMP STATION STREET ADDRESS	TOP ELEV (NOTE 9)	MERCOID LEVEL	ALARM ELEVATION	LEFT BLANK	LAG PUMP ON ELEVATION	LEAD PUMP ON ELEVATION	PUMP OFF ELEVATION (NOTE #1)	BOTTOM ELEVATION (NOTE #5)	WET WELL DIA.	DISCHARGE PIPE DIA.	DISCHARGE F.M. DIA.	BASE EXTENDER	BOTTOM SLAB THICKNESS (INCHES)	PER HOLE DIA. (SEE NOTES)	CONTROL ELEVATION	PUMP SUCTION CLEARANCE (INCHES)	SITE FLOOD ELEVATION (DESIGN NOTE 10)	INFLUENT SIZE	HATCH SIZE (SEE TABLE BELOW)
	A	B	C	D	E	F	G	H	I	J	K	L	M	N	P	Q	R	S	
	R + 1.0	P + 0.5'	P - 0.5'	---	P - 1.0'	P - 1.5'	F - SV	G - 3'	---	---	---	---	---	---	---	---	---	---	---
	---	---	---	---	---	---	---	---	---	---	---	---	---	---	---	---	---	---	
	ALL PUMPS																		
PUMP MANUFACTURER	WILO/EMU		FLYGT		HYDROMATIC		KSB												
MODEL	---		---		---		---												
IMPELLER	---		---		---		---												
PUMP DISCHARGE	---		---		---		---												
MOTOR (RPM)	---		---		---		---												
HORSEPOWER (HP)	---		---		---		---												
PHASE/VOLT/AMPS (NOTE#3)	---		---		---		---												
AIC (SEE NOTE #4)	---		---		---		---												
DESIGN POINT (GPM) @ TDH (FT)	---		---		---		---												
RUNOUT POINT (GPM) @ TDH (FT)	---		---		---		---												
EMERGENCY MAIN	---		---		---		---												
NORMAL SERVICE MAIN	---		---		---		---												
CB #1 TO PUMP NO. 1	---		---		---		---												
CB #2 TO PUMP NO. 2	---		---		---		---												
CONTROL PANEL MCB	---		---		---		---												
STARTER (SIZE & TYPE)	---		---		---		---												
ELECTRIC SERVICE (TYPE & SIZE)	---		---		---		---												

PUMP STATION INFORMATION NOTES:

1. "SV" = STORAGE VOLUME PER DESIGN ENGINEER AND SHALL BE DESIGNED FOR 12 MINUTE CYCLE TIME, MINIMUM STORAGE DEPTH SHALL BE 24".
2. IF PUMP MANUFACTURER REQUIRES A GREATER SEPARATION, THAT SEPARATION SHALL BE USED WITH THE ADDITION OF FLANGED FILLERS OR SPOOL PIECES. THE DIFFERENT SEPARATION MUST BE APPROVED BY JEA PRIOR TO CONSTRUCTION AND SHALL BE PROVIDED AT NO ADDITIONAL COST TO JEA.
3. ALL PUMP MOTORS SHALL BE 3 PHASE.
4. AMPERE INTERRUPTING CAPACITY (AIC): CONTACT THE ELECTRICAL UTILITY COMPANY FOR THIS DATA IF AVAILABLE.
5. A MANUAL TRANSFER SWITCH SHALL BE PROVIDED.

POLYMER CONCRETE FLOATATION COLLARS

	DEPTH 0-10FT		DEPTH 11-15FT		DEPTH 16-20FT		DEPTH 21-30FT	
WET WELL I.D.	MIN BASE EXTENDER (IN)	MIN WEIGHT OF TOTAL STRUCTURE (LBS)	MIN BASE EXTENDER (IN)	MIN WEIGHT OF TOTAL STRUCTURE (LBS)	MIN BASE EXTENDER (IN)	MIN WEIGHT OF TOTAL STRUCTURE (LBS)	MIN BASE EXTENDER (IN)	MIN WEIGHT OF TOTAL STRUCTURE (LBS)
8'-0"	3	35600	3	37600	2	46000	—	5200
10'-0"	5	57580	5	75000	5	78700	3	91100
12'-0"	8	82900	8	113200	8	134500	7	139000

DISCHARGE PIPE DATA (WITHIN WET WELL)

PIPE SIZE	PIPE HOLE DIA.	PUMP SEPARATION	MIN PUMPOUT SIZE	HATCH SIZE (MIN.)
(J)	(N)	(PS)	(PO)	
4"	10"	26"	4"	42"x48"
6"	12"	32"	6"	42"x60"
FREE STANDING PUMP OUT FOR PIPE SIZES GREATER THAN 6"				
8"	15"	36"	8"	---
10"	17"	44"	10"	---
12"	20"	48"	12"	---
14" & LARGER	-	-	14" & LARGER	---

CONCRETE WET WELL DIMENSIONS

WET WELL I.D.	WALL THICKNESS (MIN)	TOP SLAB THICKNESS (MIN)
8'-0"	0'-9"	0'-10"
10'-0"	1'-0"	1'-0"
12'-0"	1'-0"	1'-0"

POLYMER WET WELL DIMENSIONS

WET WELL I.D.	WALL THICKNESS (MIN)	TOP SLAB THICKNESS (MIN)
8'-0"	0'-6"	0'-10"
10'-0"	0'-6 1/2"	0'-10"
12'-0"	0'-7"	1'-0"

MCC PANEL

THE COMBINED MOTOR CONTROL AND RTV PANEL SHALL BE AS NOTED BELOW. CONTRACTOR SHALL SUBMIT APPLICABLE SHOP DRAWING PACKAGE,SEE JEA.COM FOR DETAILS.

- ☐ FIXED SPEED PANEL: 240/120 VOLT, 3 PHASE, OPEN DELTA, FULL VOLTAGE MOTOR STARTING, 15 STARTS PER HOUR
- ☐ FIXED SPEED PANEL:: 480 VOLT, 3 PHASE, FULL VOLTAGE MOTOR STARTING, 15 STARTS PER HOUR
- ☐ 1P-3P VFD PANEL:: 480/277 VOLT, 3 PHASE, WYE, FULL VOLTAGE MOTOR STARTING, 15 STARTS PER HOUR
- ☐ 3P VFD PANEL:: 480/277 VOLT, 3 PHASE, WYE, REDUCED VOLTAGE MOTOR STARTING, 10 STARTS PER HOUR

MANUAL TRANSFER SWITCH

☐	JTD364SSMCQC	200 AMP
☐	JTD365SSMCQC	400 AMP

STANDBY BACKUP PUMP

MANUFACTURER		NPSHR	
MODEL		ENGINE H.P.	
FLOW GPM @ TDH		SUCTION PIPE SIZE	
RPM		DISCHARGE PIPE SIZE	

GENERAL NOTES:

1. ALL WORK SHALL COMPLY WITH SPECIFICATIONS, SECTION 433, "SUBMERSIBLE SEWAGE PUMPING STATIONS" IN JEA WATER AND SEWER STANDARDS MANUAL.
2. PENETRATION SOIL BORING INFORMATION, TAKEN AT WET WELL LOCATION, SHALL BE SUBMITTED PRIOR TO DESIGN SUBMITTAL. SOIL BORING SHALL BE A MINIMUM OF 15' DEEPER THAN WET WELL BOTTOM OR UNTIL SUITABLE SOIL IS LOCATED UP TO A MAXIMUM OF 25' BELOW WET WELL BOTTOM.
3. ALL PIPING WITHIN AND EXTERNAL OF THE WET WELL SHALL BE FLANGED SCHEDULE 40, 316 STAINLESS STEEL. BUTT WELDING OF ANY PIPING (EXCEPT FOR THE EMERGENCY SUCTION PIPE IN THE WET WELL) IS NOT ALLOWED.
4. ALL DUCTILE IRON FITTINGS (90s, 45s, TEES ETC.) WITHIN AND EXTERNAL OF THE WET WELL SHALL BE FLANGED EPOXY LINED.
5. ALL NUTS, BOLTS AND ACCESSORIES WITHIN AND EXTERNAL OF THE WET WELL SHALL BE 316 STAINLESS STEEL AND SHALL BE COATED WITH A "NEVER SEIZE" TYPE COATING.
6. ALL EXTERIOR JOINTS OF PRECAST CONCRETE AND PRECAST POLYMER WET WELLS AND MANHOLES SHALL BE SEALED WITH A 18" WIDE RUBBERIZED ASPHALT MEMBRANE TAPE. (SEE JEA SPEC).
7. THE VOID AREAS BETWEEN TOP SLAB AND FORCE MAIN PIPE SHALL BE SEALED W/EUCOLASTIC BY EUCLID CITEM CO. OR APPROVED EQUAL SEAL. ALL OTHER OPENINGS IN CONCRETE TOP WITH NON-SHRINK GROUT, EXCEPT AS DESCRIBED IN NOTE #6. PROVIDE INSECT SCREEN SECURED TO TOP.
8. PROVIDE 6" x 6" OPENING THROUGH THE CONCRETE TOP OF THE WET WELL AND INSERT 8" x 8" x 1 $\frac{1}{2}$" THICK ALUMINUM GRATE VENT CONSTRUCTED OF 1 $\frac{1}{2}$" WIDE x $\frac{1}{8}$" MATERIAL. .
9. PROVIDE 2" PIPE (PVC, SCH. 80) THROUGH CONCRETE TOP WITH CAPPED TOP AD OPEN END BOTTOM. SEAL AROUND CONCRETE TOP WITH NON-SHRINK GROUT. IN THE FUTURE, THIS PIPE WILL BE UTILIZED FOR THE CONSTRUCTION OF THE AIR-RELEASE VALVE PIPING. EXTEND 18" ABOVE THE TOP OF WET WELL.
10. SITE GRADE IS 6" (MIN) BELOW TOP ELEVATION OF PUMP STATION SLAB.
11. IN SILTS, CLAY OR HIGHLY ORGANIC SOILS (FINE-GRAINED SOILS INCLUDING SOIL GROUPS ML, CL, OL, MH, CH, OH AND PT) THE SOILS SHALL BE OVER-EXCAVATED AN ADDITIONAL 12" (AT A MIN.) AND BACKFILL WITH GRANULAR BACKFILL (57 STONE).
12. PRECAST CONCRETE WET WELL SHALL MEET A.S.T.M. C-478 STANDARD, ENTIRE INSIDE SURFACE OF WET WELL & TOP SLAB SHALL BE LINED WITH APPROVED LINER. LINER INSTALLER MUST BE CERTIFIED BY LINER MANUFACTURER. SUBMIT CERTIFICATION WITH SHOP DRAWING SUBMITTAL. SEE SPECIFICATIONS. THE EXCAVATED HOLE SHALL BE DRY (DE-WATERED) DURING THE WET WELL INSTALLATION. (SEE WET WELL DIMENSIONS TABLE)
13. PRECAST POLYMER CONCRETE WET WELL SHALL MEET JEA POLYMER PRECAST STANDARD. THE EXCAVATED HOLE SHALL BE DRY (DE-WATERED) DURING THE WET WELL INSTALLATION. (SEE WET WELL DIMENSIONS TABLE)
14. SEE REFERENCE FACILITIES STANDARDS FOR GENERATOR, ATS, BACKFLOW, BOLLARDS AND PAVEMENT SPECIFICATIONS. (HTTPS://WWW.JEA.COM/ENGINGEERING_AND_CONSTRUCTION/FACILITIES/)
15. SEE JEA STANDARD SHEETS (AVAILABLE AT JEA.COM) FOR CONSTRUCTION DETAILS OF SPECIFIC COMPONENTS, INCLUDING ELECTRICAL.

DESIGN NOTES:

1. ENGINEER SHALL USE THIS PLAN AS A BASIS OF DESIGN FOR SITE SPECIFIC PUMP STATION. THESE NOTES TO BE ERASED ON COMPLETED DRAWING.
2. WET WELL SIZE: PUMP STATION 8'-0" I.D. MIN., 27' DEEP MAX.
3. MINIMUM FORCE MAIN FLOW RATE: 4" DIAMETER @ 80 GPM ALL GREATER SIZES SHALL BE DESIGNED FOR FLOW VELOCITY BETWEEN 2FPS AND 5FPS
4. MINIMUM ELECTRIC SERVICE SIZE: 240 VOLT, 200 AMP., 3 PHASE, 4 WIRE
5. MINIMUM CONCRETE PAD SIZE: 40'x40'
6. MINIMUM JUNCTION MANHOLE SIZE: 5'-0" I.D. LOCATE ON SAME SIDE OF DRIVEWAY AS PUMP-OUT CONNECTION.
7. IT IS THE ENGINEER'S RESPONSIBILITY TO DESIGN THE SITE TO MEET FUNCTIONALITY AND SITE SPECIFIC CONDITIONS. HOWEVER, THE ENGINEER SHALL MAKE EVERY EFFORT TO CONFORM TO THE STANDARD DRAWING SHOWN HERE.
8. HOW TO DETERMINE TOWER OR POLE FOR SCADA (SEE ALSO SPEC SECTION 433): TO DETERMINE IF A POLE OR TOWER IS REQUIRED A RADIO PATH STUDY MUST FIRST BE CONDUCTED. THE RADIO PATH STUDY MUST BE DONE USING THE SAME TYPE OF RADIO USED IN THE SCADA PANEL AND MUST BE A MINIMUM OF -86DB RSSI. IF THE HEIGHT OF THE MINIMUM -86DB RSSI LEVEL IS LESS THAN OR EQUAL TO 20 FEET THEN A 20 FOOT POLE CAN BE USED. IF THE HEIGHT REQUIREMENTS ARE OVER 20 FEET THEN A TOWER MUST BE USED.
9. THE PUMP STATION TOP ELEVATION SHALL BE SET AT A MINIMUM OF 1' ABOVE THE "R" ELEVATION. THE "R" ELEVATION SHALL BE EQUAL TO THE DESIGN HIGH WATER LEVEL OR THE 100 YEAR FLOOD ELEVATION, WHICHEVER IS HIGHER.
10. THE TOP ELEVATION OF JUNCTION MAN HOLE SHALL MATCH THE TOP ELEVATION OF NEAREST ADJACENT CONCRETE STRUCTURE (PUMP STATION SLAB, DRIVE WAY OR CURB).

CONSTRUCTION NOTES:

1. SLOPE SITE CONCRETE 1" PER 8' TO DRAIN TOWARDS STREET OR OTHER ADJACENT CITY OR JEA OWNED DRAINAGE FACILITY.
2. CONTRACTOR MUST MAINTAIN LANDSCAPING UNTIL FINAL ACCEPTANCE AND SUPPLY ONE (1) YEAR WARRANTY FROM NURSERY SUPPLYING PLANTS FROM DATE OF ACCEPTANCE.
3. DEMARCATION BOX SHALL BE PLACED AS CLOSE AS POSSIBLE TO WET WELL. IT SHALL BE PLACED AT LEAST 3' FROM WET WELL HATCH AND AT LEAST 5' FROM VENTS. IT SHALL BE PLACED SO AS NOT TO INTERFERE WITH ACCESS TO THE WET WELL OR DISCHARGE APPARATUS, AND DOOR SHALL FACE AWAY FROM WET WELL.
4. SEE GROUNDING PLAN FOR ELECTRICAL SERVICE GROUNDING REQUIREMENTS (SEE GROUNDING DETAIL SHEET).
5. CONTRACTOR MUST KEEP COMPANY SIGN AND PHONE NUMBER ON FENCE UNTIL STATION ACCEPTED.
6. TRANSFORMERS SHALL BE LOCATED ON THE SAME SIDE OF PROPERTY AS METER CAN AND ELECTRICAL PANELS.
7. WET WELL LID SHALL UTILIZE STAPLE ASSEMBLY FOR LOCKING THE WET WELL.

SITE SPECIFIC

NO.	BY	DATE	REVISIONS
4.			
3.			
2.			
1.	LLOYD HENRY	9/25/2018	MANUAL TRANSFER SWITCH TABLE

DESIGN ENGINEER
FLORIDA REGISTRATION NO.

DESIGNER:
DRAWN BY:
DATE:
CHECKED BY:
DATE:

JEA Building Community

JEA STANDARD CLASS ONE PUMP STATION WITH STANDBY BACKUP PUMP FOR PEAK FLOWS BETWEEN 0 TO 440 GPM PLAN AND SECTION

NO. SHEETS
PROJ. NO.
SHEET NO.
DATE:
DRAWING NO.
SCALE:

G:\Services\Shared\AutoCAD\henrla\Water Standards\2021\PUMP STATION SITE SPECIFIC.dwg Current Layout Tab = CLASS ONE PUMP STATION WITH STANDBY BACKUP PUMP STATION DATA Thu Feb 25, 2021 - 15:14

Xrefs Attached=

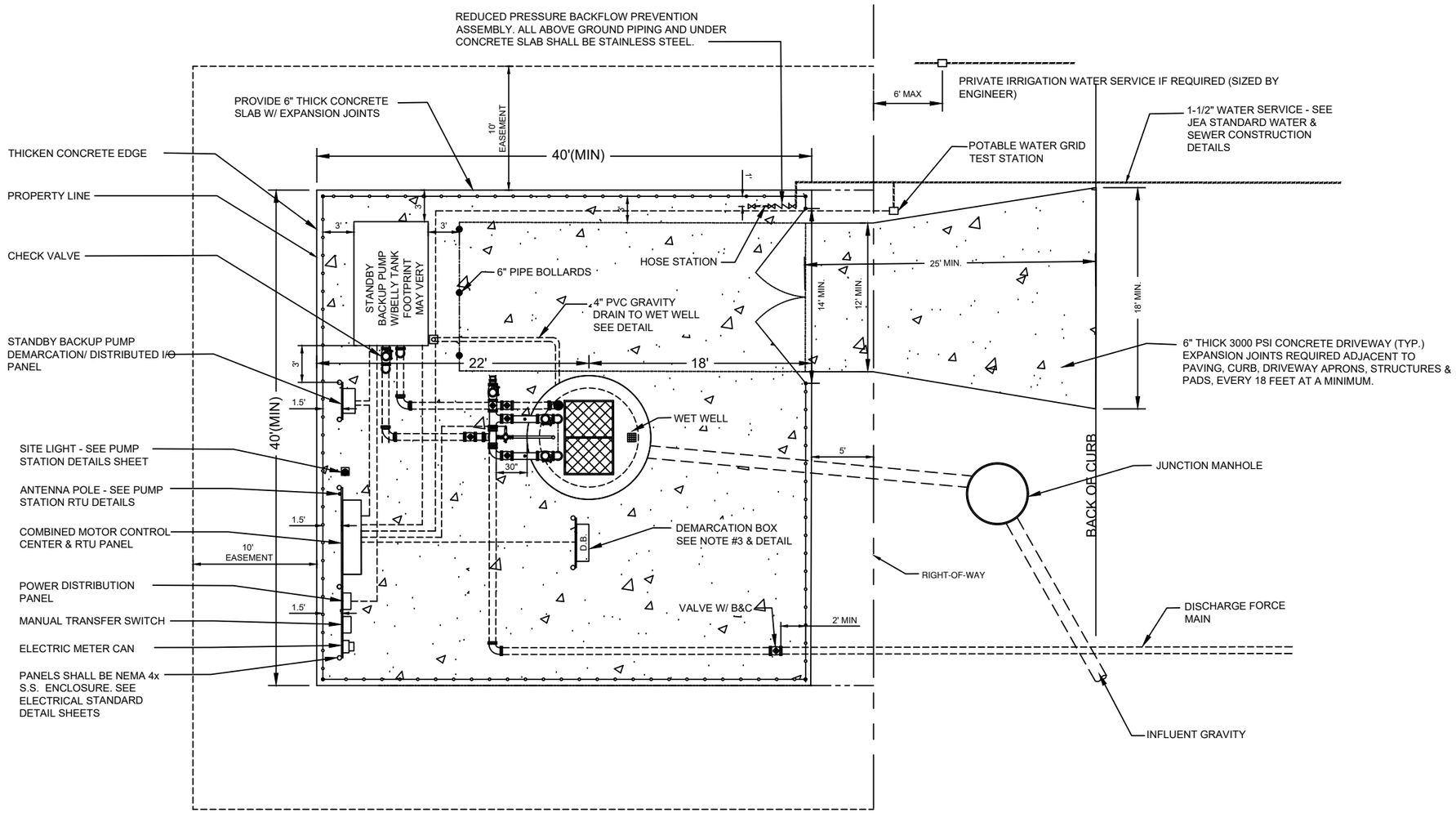

SITE SPECIFIC

NO.	BY	DATE	REVISIONS
4.			
3.			
2.	LLOYD HENRY	9/26/2018	UPDATED ELECTRICAL PANEL
1.			

DESIGN ENGINEER

FLORIDA REGISTRATION NO.

DESIGNER:
DRAWN BY:
CHECKED BY:
DATE:

JEA Building Community

JEA STANDARD CLASS ONE PUMP STATION WITH STANDBY BACKUP PUMP FOR PEAK FLOWS BETWEEN 0 TO 440 GPM PLAN AND SECTION

PROJ. NO.
DATE:
SCALE: 1" = 10'

NO. SHEETS
SHEET NO.
DRAWING NO.

G:\Services\Shared\AutoCAD\henrlo\Water Standards\2021\PUMP STATION SITE SPECIFIC.dwg Current Layout Tab = CLASS ONE PUMP STATION WITH STANDBY BACKUP PUMP Thu Feb 25, 2021 – 15:14

Xrefs Attached=

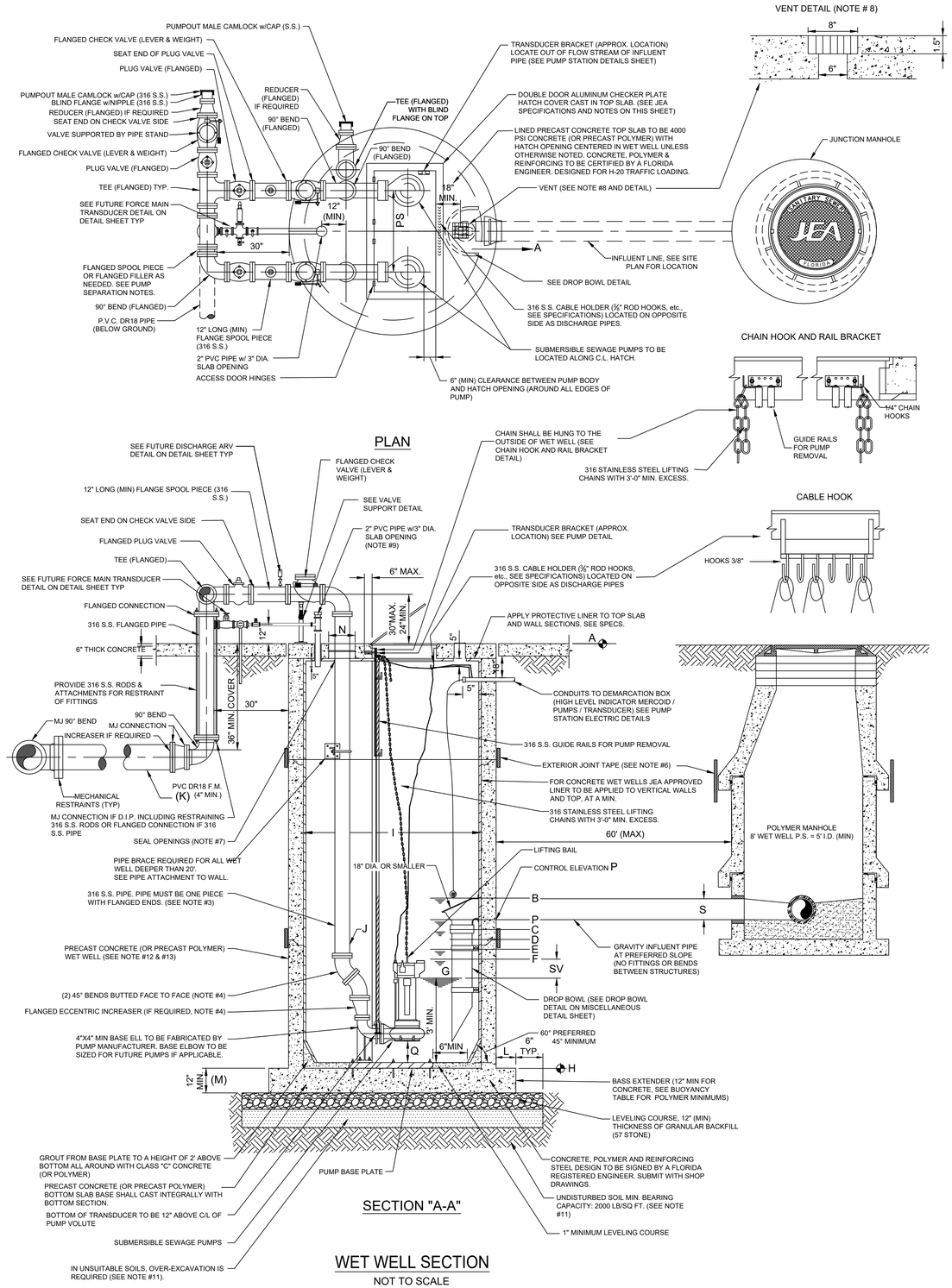

PUMP STATION INFORMATION
SCHEDULE OF ELEVATIONS

PUMP STATION STREET ADDRESS	TOP ELEV (NOTE 9)	MERCOID LEVEL	ALARM ELEVATION	LEFT BLANK	LAG PUMP ON ELEVATION	LEAD PUMP ON ELEVATION	PUMP OFF ELEVATION	BOTTOM ELEVATION	WET WELL DIA.	DISCHARGE PIPE DIA.	DISCHARGE F.M. DIA.	BASE EXTENDER	BOTTOM SLAB THICKNESS (INCHES)	PER HOLE DIA. (SEE NOTES)	CONTROL ELEVATION	PUMP SUCTION CLEARANCE (INCHES)	SITE FLOOD ELEVATION (DESIGN NOTE 10)	INFLUENT SIZE	HATCH SIZE (SEE TABLE BELOW)
	A	B	C	D	E	F	G	H	I	J	K	L	M	N	P	Q	R	S	
	R + 1.0	P + 0.5'	P - 0.5'	---	P - 1.0'	P - 1.5'	F - SV	G - 3'	---	---	---	---	---	---	---	---	---	---	---
	---	---	---	---	---	---	---	---	---	---	---	---	---	---	---	---	---	---	

	ALL PUMPS			
PUMP MANUFACTURER	WILO/EMU	FLYGT	HYDROMATIC	KSB
MODEL	---	---	---	---
IMPELLER	---	---	---	---
PUMP DISCHARGE	---	---	---	---
MOTOR (RPM)	---	---	---	---
HORSEPOWER (HP)	---	---	---	---
PHASE/VOLT/AMPS (NOTE #3)	---	---	---	---
AIC (SEE NOTE #4)	---	---	---	---
DESIGN POINT (GPM) @ TDH (FT)	---	---	---	---
RUNOUT POINT (GPM) @ TDH (FT)	---	---	---	---
EMERGENCY MAIN	---	---	---	---
NORMAL SERVICE MAIN	---	---	---	---
CB #1 TO PUMP NO. 1	---	---	---	---
CB #2 TO PUMP NO. 2	---	---	---	---
CONTROL PANEL MCB	---	---	---	---
STARTER (SIZE & TYPE)	---	---	---	---
ELECTRIC SERVICE (TYPE & SIZE)	---	---	---	---

PUMP STATION INFORMATION NOTES:

1. "SV" = STORAGE VOLUME PER DESIGN ENGINEER AND SHALL BE DESIGNED FOR 12 MINUTE CYCLE TIME, MINIMUM STORAGE DEPTH SHALL BE 24".
2. IF PUMP MANUFACTURER REQUIRES A GREATER SEPARATION, THAT SEPARATION SHALL BE USED WITH THE ADDITION OF FLANGED FILLERS OR SPOOL PIECES, THE DIFFERENT SEPARATION MUST BE APPROVED BY JEA PRIOR TO CONSTRUCTION AND SHALL BE PROVIDED AT NO ADDITIONAL COST TO JEA.
3. ALL PUMP MOTORS SHALL BE 3 PHASE.
4. AMPERE INTERRUPTING CAPACITY (AIC): CONTACT THE ELECTRICAL UTILITY COMPANY FOR THIS DATA IF AVAILABLE.

POLYMER CONCRETE FLOATATION COLLARS

	DEPTH 0-10FT		DEPTH 11-15FT		DEPTH 16-20FT		DEPTH 21-30FT	
WET WELL I.D.	MIN BASE EXTENDER (IN)	MIN WEIGHT OF TOTAL STRUCTURE (LBS)	MIN BASE EXTENDER (IN)	MIN WEIGHT OF TOTAL STRUCTURE (LBS)	MIN BASE EXTENDER (IN)	MIN WEIGHT OF TOTAL STRUCTURE (LBS)	MIN BASE EXTENDER (IN)	MIN WEIGHT OF TOTAL STRUCTURE (LBS)
8'-0"	3	35600	3	37600	2	46000	—	5200
10'-0"	5	57580	5	75000	5	78700	3	91100
12'-0"	8	82900	8	113200	8	134500	7	139000

DISCHARGE PIPE DATA (WITHIN WET WELL)

PIPE SIZE	PIPE HOLE DIA.	PUMP SEPARATION	MIN PUMPOUT SIZE	HATCH SIZE (MIN.)
(J)	(N)	(PS)	(PO)	
4"	10"	26"	4"	42"x48"
6"	12"	32"	6"	42"x60"
FREE STANDING PUMP OUT FOR PIPE SIZES GREATER THAN 6"				
8"	15"	36"	8"	---
10"	17"	44"	10"	---
12"	20"	48"	12"	---
14" & LARGER	-	-	14" & LARGER	---

CONCRETE WET WELL DIMENSIONS

WET WELL I.D.	WALL THICKNESS (MIN)	TOP SLAB THICKNESS (MIN)
8'-0"	0'-9"	0'-10"
10'-0"	1'-0"	1'-0"
12'-0"	1'-0"	1'-0"

POLYMER WET WELL DIMENSIONS

WET WELL I.D.	WALL THICKNESS (MIN)	TOP SLAB THICKNESS (MIN)
8'-0"	0'-6"	0'-10"
10'-0"	0'-6 1/2"	0'-10"
12'-0"	0'-7"	1'-0"

MCC PANEL

THE COMBINED MOTOR CONTROL AND RTV PANEL SHALL BE AS NOTED BELOW. CONTRACTOR SHALL SUBMIT APPLICABLE SHOP DRAWING PACKAGE,SEE JEA.COM FOR DETAILS.

- ☐ FIXED SPEED PANEL: 240/120 VOLT, 3 PHASE, OPEN DELTA, FULL VOLTAGE MOTOR STARTING, 15 STARTS PER HOUR
- ☐ FIXED SPEED PANEL:: 480 VOLT, 3 PHASE, FULL VOLTAGE MOTOR STARTING, 15 STARTS PER HOUR
- ☐ 1P-3P VFD PANEL:: 480/277 VOLT, 3 PHASE, WYE, FULL VOLTAGE MOTOR STARTING, 15 STARTS PER HOUR
- ☐ 3P VFD PANEL:: 480/277 VOLT, 3 PHASE, WYE, REDUCED VOLTAGE MOTOR STARTING, 10 STARTS PER HOUR

GENERATOR

MANUFACTURER	
MODEL	
KW	

MANUAL TRANSFER SWITCH

☐ JTD364SSMCQC	200 AMP
☐ JTD365SSMCQC	400 AMP

GENERAL NOTES:

1. ALL WORK SHALL COMPLY WITH SPECIFICATIONS, SECTION 433, "SUBMERSIBLE SEWAGE PUMPING STATIONS" IN JEA WATER AND SEWER STANDARDS MANUAL.
2. PENETRATION SOIL BORING INFORMATION, TAKEN AT WET WELL LOCATION, SHALL BE SUBMITTED PRIOR TO DESIGN SUBMITTAL. SOIL BORING SHALL BE A MINIMUM OF 15' DEEPER THAN WET WELL BOTTOM OR UNTIL SUITABLE SOIL IS LOCATED UP TO A MAXIMUM OF 25' BELOW WET WELL BOTTOM.
3. ALL PIPING WITHIN AND EXTERNAL OF THE WET WELL SHALL BE FLANGED SCHEDULE 40, 316 STAINLESS STEEL. BUTT WELDING OF ANY PIPING (EXCEPT FOR THE EMERGENCY SUCTION PIPE IN THE WET WELL) IS NOT ALLOWED.
4. DUCTILE IRON ALL FITTINGS (90s, 45s, TEES ETC.) WITHIN AND EXTERNAL OF THE WET WELL SHALL BE FLANGED EPOXY LINED .
5. ALL NUTS, BOLTS AND ACCESSORIES WITHIN AND EXTERNAL OF THE WET WELL SHALL BE 316 STAINLESS STEEL AND SHALL BE COATED WITH A "NEVER SEIZE" TYPE COATING.
6. ALL EXTERIOR JOINTS OF PRECAST CONCRETE AND PRECAST POLYMER WET WELLS AND MANHOLES SHALL BE SEALED WITH A 18" WIDE RUBBERIZED ASPHALT MEMBRANE TAPE. (SEE JEA SPEC).
7. THE VOID AREAS BETWEEN TOP SLAB AND FORCE MAIN PIPE SHALL BE SEALED W/EUCOLASTIC BY EUCLID CITEM CO. OR APPROVED EQUAL SEAL. ALL OTHER OPENINGS IN CONCRETE TOP WITH NON-SHRINK GROUT, EXCEPT AS DESCRIBED IN NOTE #6. PROVIDE INSECT SCREEN SECURED TO TOP.
8. PROVIDE 6" x 6" OPENING THROUGH THE CONCRETE TOP OF THE WET WELL AND INSERT 8" x 8" x 1 $\frac{1}{2}$" THICK ALUMINUM GRATE VENT CONSTRUCTED OF 1 $\frac{1}{2}$" WIDE x $\frac{1}{8}$" MATERIAL. .
9. PROVIDE 2" PIPE (PVC, SCH. 80) THROUGH CONCRETE TOP WITH CAPPED TOP AND OPEN END BOTTOM). SEAL AROUND CONCRETE TOP WITH NON-SHRINK GROUT. IN THE FUTURE, THIS PIPE WILL BE UTILIZED FOR THE CONSTRUCTION OF THE AIR-RELEASE VALVE PIPING. EXTEND 18" ABOVE TOP OF WET WELL.
10. SITE GRADE IS 6" (MIN) BELOW TOP ELEVATION OF PUMP STATION SLAB.
11. IN SILTS, CLAY OR HIGHLY ORGANIC SOILS (FINE-GRAINED SOILS INCLUDING SOIL GROUPS ML, CL, OL, MH, CH, OH AND PT) THE SOILS SHALL BE OVER-EXCAVATED AN ADDITIONAL 12" (AT A MIN.) AND BACKFILL WITH GRANULAR BACKFILL (57 STONE).
12. PRECAST CONCRETE WET WELL SHALL MEET A.S.T.M. C-478 STANDARD, ENTIRE INSIDE SURFACE OF WET WELL & TOP SLAB SHALL BE LINED WITH APPROVED LINER. LINER INSTALLER MUST BE CERTIFIED BY LINER MANUFACTURER. SUBMIT CERTIFICATION WITH SHOP DRAWING SUBMITTAL. SEE SPECIFICATIONS. THE EXCAVATED HOLE SHALL BE DRY (DE-WATERED) DURING THE WET WELL INSTALLATION. (SEE WET WELL DIMENSIONS TABLE)
13. PRECAST POLYMER CONCRETE WET WELL SHALL MEET JEA POLYMER PRECAST STANDARD. THE EXCAVATED HOLE SHALL BE DRY (DE-WATERED) DURING THE WET WELL INSTALLATION. (SEE WET WELL DIMENSIONS TABLE)
14. IF ODOR CONTROL WILL NOT BE INSTALLED UPON COMPLETION THEN CONDUITS AND PIPING SHALL BE STUBBED OUT FOR EACH. SEE STUB OUT DETAIL SHEET
15. FLOW METER SHALL BE ULTRASONIC OR MAG METER. ULTRASONIC FLOW METER REQUIRES A FLOW METER PANEL. MAG METER REQUIRES BY PASS PIPING. SEE ULTRASONIC/MAG METER DETAIL ON MISCELLANEOUS DETAILS SHEET.
16. SEE REFERENCE FACILITIES STANDARDS FOR GENERATOR, ATS, BACKFLOW, BOLLARDS AND PAVEMENT SPECIFICATIONS. (HTTPS://WWW.JEA.COM/ENGINGEERING_AND_CONSTRUCTION/FACILITIES/)
17. SEE JEA STANDARD SHEETS (AVAILABLE AT JEA.COM) FOR CONSTRUCTION DETAILS OF SPECIFIC COMPONENTS, INCLUDING ELECTRICAL.

DESIGN NOTES:

1. ENGINEER SHALL USE THIS PLAN AS A BASIS OF DESIGN FOR SITE SPECIFIC PUMP STATION. THESE NOTES TO BE ERASED ON COMPLETED DRAWING.
2. WET WELL SIZE: PUMP STATION 8'-0" I.D. MIN., 27' DEEP MAX.
3. MINIMUM FLOW RATE: 500 GPM EACH PUMP
4. MINIMUM ELECTRIC SERVICE SIZE: 240 VOLT, 200 AMP., 3 PHASE, 4 WIRE
5. MINIMUM CONCRETE PAD SIZE: 50'x55'
6. MINIMUM JUNCTION MANHOLE SIZE: 5'-0" I.D. LOCATE ON SAME SIDE OF DRIVEWAY AS PUMP-OUT CONNECTION.
7. IT IS THE ENGINEER'S RESPONSIBILITY TO DESIGN THE SITE TO MEET FUNCTIONALITY AND SITE SPECIFIC CONDITIONS. HOWEVER, THE ENGINEER SHALL MAKE EVERY EFFORT TO CONFORM TO THE STANDARD DRAWING SHOWN HERE.
8. HOW TO DETERMINE TOWER OR POLE FOR SCADA (SEE ALSO SPEC SECTION 433): TO DETERMINE IF A POLE OR TOWER IS REQUIRED A RADIO PATH STUDY MUST FIRST BE CONDUCTED. THE RADIO PATH STUDY MUST BE DONE USING THE SAME TYPE OF RADIO USED IN THE SCADA PANEL AND MUST BE A MINIMUM OF -86DB RSSI. IF THE HEIGHT OF THE MINIMUM -86DB RSSI LEVEL IS LESS THAN OR EQUAL TO 20 FEET THEN A 20 FOOT POLE CAN BE USED. IF THE HEIGHT REQUIREMENTS ARE OVER 20 FEET THEN A TOWER MUST BE USED.
9. THE PUMP STATION TOP ELEVATION SHALL BE SET AT A MINIMUM OF 1' ABOVE THE "R" ELEVATION. THE "R" ELEVATION SHALL BE EQUAL TO THE DESIGN HIGH WATER LEVEL OR THE 100 YEAR FLOOD ELEVATION, WHICHEVER IS HIGHER.
10. THE TOP ELEVATION OF JUNCTION MAN HOLE SHALL MATCH THE TOP ELEVATION OF NEAREST ADJACENT CONCRETE STRUCTURE (PUMP STATION SLAB, DRIVE WAY OR CURB).
11. FLOW METER: ULTRASONIC FLOW METER OR MAG METER CONFIGURATION SHALL BE DESIGNED BY ENGINEER.

CONSTRUCTION NOTES:

1. SLOPE SITE CONCRETE 1" PER 8' TO DRAIN TOWARDS STREET OR OTHER ADJACENT CITY OR JEA OWNED DRAINAGE FACILITY.
2. CONTRACTOR MUST MAINTAIN LANDSCAPING UNTIL FINAL ACCEPTANCE AND SUPPLY ONE (1) YEAR WARRANTY FROM NURSERY SUPPLYING PLANTS FROM DATE OF ACCEPTANCE.
3. DEMARCATION BOX SHALL BE PLACED AS CLOSE AS POSSIBLE TO WET WELL. IT SHALL BE PLACED AT LEAST 3' FROM WET WELL HATCH AND AT LEAST 5' FROM VENTS. IT SHALL BE PLACED SO AS NOT TO INTERFERE WITH ACCESS TO THE WET WELL OR DISCHARGE APPARATUS, AND DOOR SHALL FACE AWAY FROM WET WELL.
4. SEE GROUNDING PLAN FOR ELECTRICAL SERVICE GROUNDING REQUIREMENTS (SEE GROUNDING DETAIL SHEET).
5. CONTRACTOR MUST KEEP COMPANY SIGN AND PHONE NUMBER ON FENCE UNTIL STATION ACCEPTED.
6. TRANSFORMERS SHALL BE LOCATED ON THE SAME SIDE OF PROPERTY AS METER CAN AND ELECTRICAL PANELS.
7. WET WELL LID SHALL UTILIZE STAPLE ASSEMBLY FOR LOCKING THE WET WELL.

SITE SPECIFIC

NO.	BY	DATE	REVISIONS
4.			
3.			
2.			
1.	LLOYD HENRY	9/25/2018	MANUAL TRANSFER SWITCH TABLE

DESIGN ENGINEER:
FLORIDA REGISTRATION NO.

DESIGNER:
DRAWN BY:
DATE:
CHECKED BY:
DATE:

JEA Building Community

JEA STANDARD CLASS TWO PUMP STATION WITH GENERATOR FOR PEAK FLOWS BETWEEN 441 AND 1000 GPM PLAN AND SECTION

PROJ. NO.
DATE:
SCALE:
NO. SHEETS
SHEET NO.
DRAWING NO.

G:\Services\Shared\AutoCAD\henrlo\Water Standards\2021\PUMP STATION SITE SPECIFIC.dwg Current Layout Tab = CLASS TWO PUMP STATION WITH GENERATOR STATION DATA Thu Feb 25, 2021 – 15:14

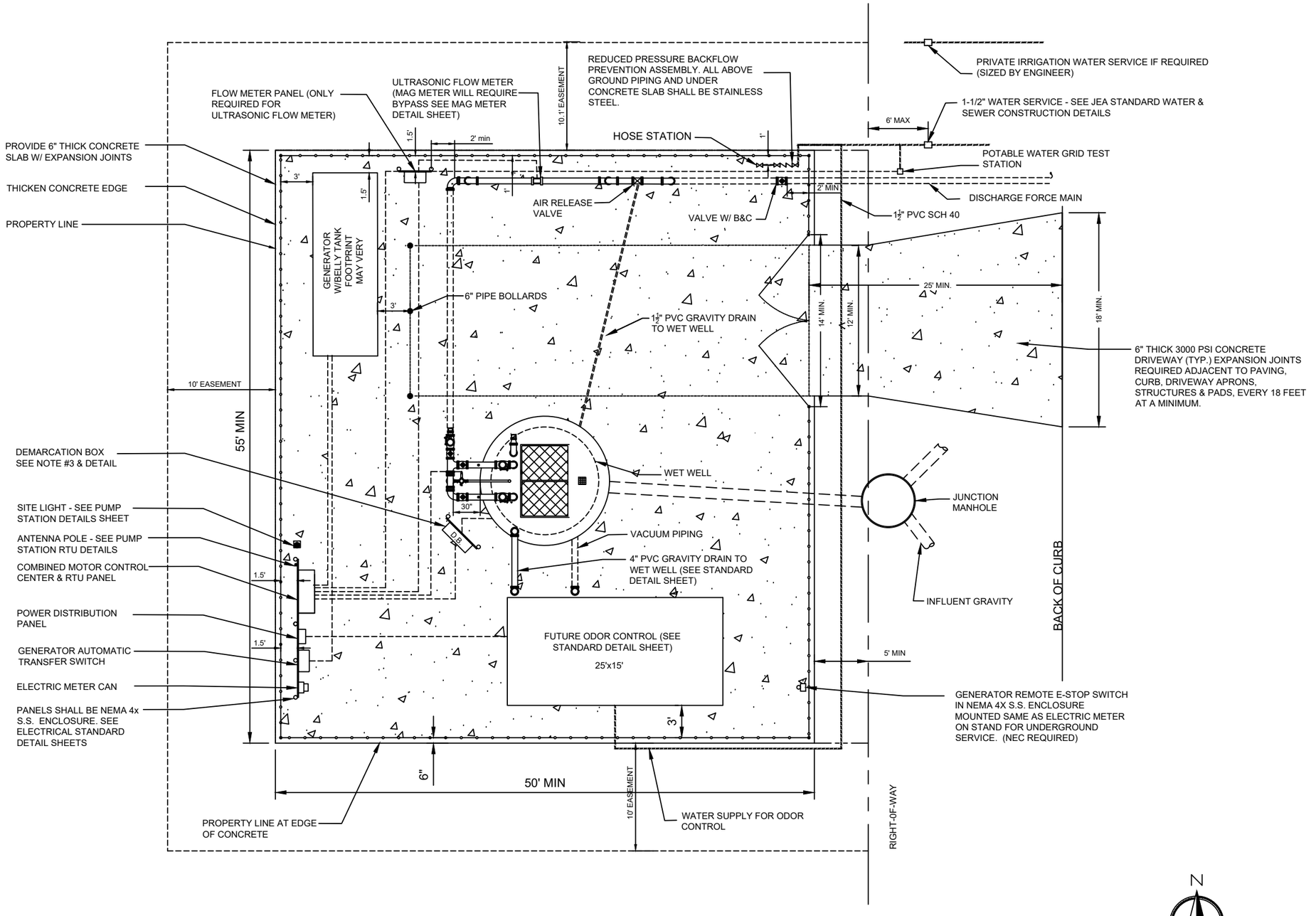

SITE SPECIFIC

NO.	BY	DATE	REVISIONS
4.			
3.			
2.			
1.	LLOYD HENRY	8/25/2016	UPDATED ELECTRICAL PANEL

DESIGN ENGINEER

FLORIDA REGISTRATION NO.

DESIGNED:
DRAWN BY:
DATE:
CHECKED BY:
DATE:

JEA Building Community sm

JEA STANDARD CLASS TWO PUMP STATION WITH GENERATOR FOR PEAK FLOWS BETWEEN 441 AND 1000 GPM PLAN AND SECTION

PROJ. NO.
DATE:
SCALE: 1" = 10'

NO. SHEETS
SHEET NO.
DRAWING NO.

G:\Services\Shared\AutoCAD\henrla\Water Standards\2021\PUMP STATION SITE SPECIFIC.dwg Current Layout Tab = CLASS TWO PUMP STATION SITE PLAN WITH GENERATOR Thu Feb 25, 2021 – 15:14

Xrefs Attached=

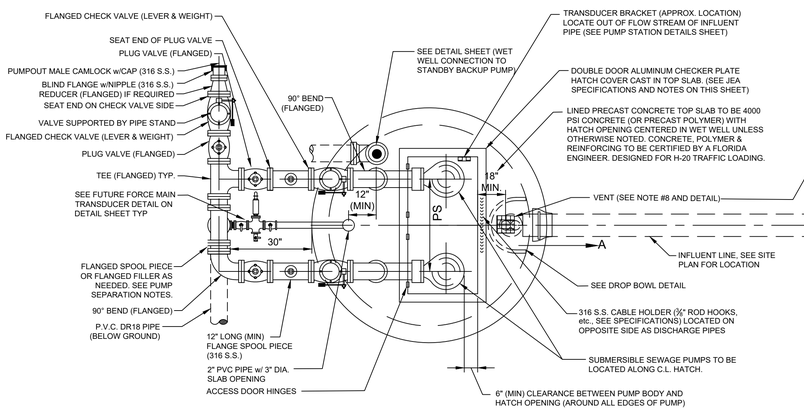

PLAN

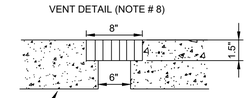

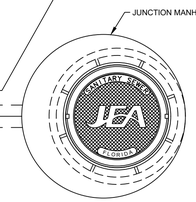

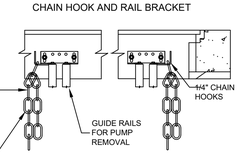

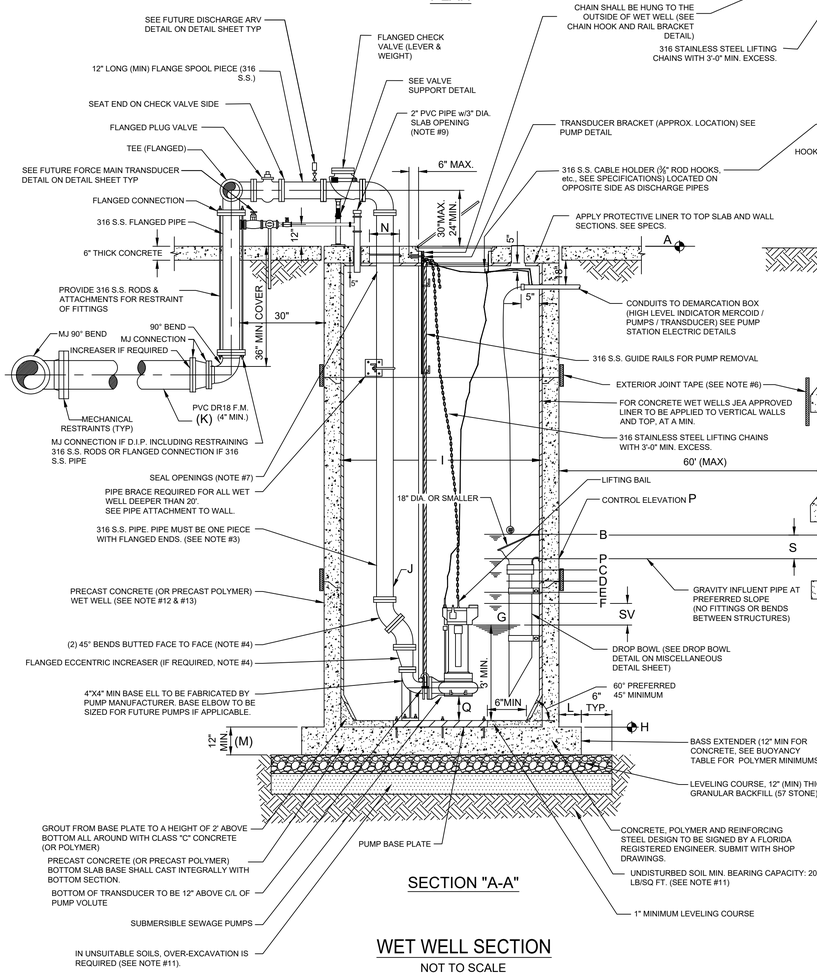

SECTION "A-A"

WET WELL SECTION

NOT TO SCALE

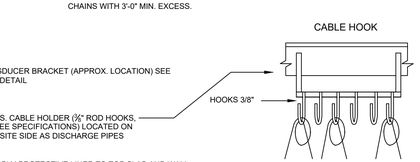

PUMP STATION INFORMATION
SCHEDULE OF ELEVATIONS

PUMP STATION STREET ADDRESS	TOP ELEV (NOTE 9)	MERCOID LEVEL	ALARM ELEVATION	LEFT BLANK	LAG PUMP ON ELEVATION	LEAD PUMP ON ELEVATION	PUMP OFF ELEVATION	BOTTOM ELEVATION	WET WELL DIA.	DISCHARGE PIPE DIA.	DISCHARGE F.M. DIA.	BASE EXTENDER	BOTTOM SLAB THICKNESS (INCHES)	PER HOLE DIA. (SEE NOTES)	CONTROL ELEVATION	PUMP SUCTION CLEARANCE (INCHES)	SITE FLOOD ELEVATION (DESIGN NOTE 10)	INFLUENT SIZE	HATCH SIZE (SEE TABLE BELOW)
	A	B	C	D	E	F	G	H	I	J	K	L	M	N	P	Q	R	S	
	R + 1.0	P + 0.5'	P - 0.5'	---	P - 1.0'	P - 1.5'	F - SV	G - 3'	---	---	---	---	---	---	---	---	---	---	---
	---	---	---	---	---	---	---	---	---	---	---	---	---	---	---	---	---	---	

	ALL PUMPS			
PUMP MANUFACTURER	WILO/EMU	FLYGT	HYDROMATIC	KSB
MODEL	---	---	---	---
IMPELLER	---	---	---	---
PUMP DISCHARGE	---	---	---	---
MOTOR (RPM)	---	---	---	---
HORSEPOWER (HP)	---	---	---	---
PHASE/VOLT/AMPS (NOTE #3)	---	---	---	---
AIC (SEE NOTE #4)	---	---	---	---
DESIGN POINT (GPM) @ TDH (FT)	---	---	---	---
RUNOUT POINT (GPM) @ TDH (FT)	---	---	---	---
EMERGENCY MAIN	---	---	---	---
NORMAL SERVICE MAIN	---	---	---	---
CB #1 TO PUMP NO. 1	---	---	---	---
CB #2 TO PUMP NO. 2	---	---	---	---
CONTROL PANEL MCB	---	---	---	---
STARTER (SIZE & TYPE)	---	---	---	---
ELECTRIC SERVICE (TYPE & SIZE)	---	---	---	---

PUMP STATION INFORMATION NOTES:

1. "SV" = STORAGE VOLUME PER DESIGN ENGINEER AND SHALL BE DESIGNED FOR 12 MINUTE CYCLE TIME, MINIMUM STORAGE DEPTH SHALL BE 24".
2. IF PUMP MANUFACTURER REQUIRES A GREATER SEPARATION, THAT SEPARATION SHALL BE USED WITH THE ADDITION OF FLANGED FILLERS OR SPOOL PIECES. THE DIFFERENT SEPARATION MUST BE APPROVED BY JEA PRIOR TO CONSTRUCTION AND SHALL BE PROVIDED AT NO ADDITIONAL COST TO JEA.
3. ALL PUMP MOTORS SHALL BE 3 PHASE.
4. AMPERE INTERRUPTING CAPACITY (AIC): CONTACT THE ELECTRICAL UTILITY COMPANY FOR THIS DATA IF AVAILABLE.
5. A MANUAL TRANSFER SWITCH SHALL BE PROVIDED.

POLYMER CONCRETE FLOATATION COLLARS

	DEPTH 0-10FT		DEPTH 11-15FT		DEPTH 16-20FT		DEPTH 21-30FT	
WET WELL I.D.	MIN BASE EXTENDER (IN)	MIN WEIGHT OF TOTAL STRUCTURE (LBS)	MIN BASE EXTENDER (IN)	MIN WEIGHT OF TOTAL STRUCTURE (LBS)	MIN BASE EXTENDER (IN)	MIN WEIGHT OF TOTAL STRUCTURE (LBS)	MIN BASE EXTENDER (IN)	MIN WEIGHT OF TOTAL STRUCTURE (LBS)
8'-0"	3	35600	3	37600	2	46000	—	5200
10'-0"	5	57580	5	75000	5	78700	3	91100
12'-0"	8	82900	8	113200	8	134500	7	139000

DISCHARGE PIPE DATA (WITHIN WET WELL)

PIPE SIZE	PIPE HOLE DIA.	PUMP SEPARATION	MIN PUMPOUT SIZE	HATCH SIZE (MIN.)
(J)	(N)	(PS)	(PO)	
4"	10"	26"	4"	42"x48"
6"	12"	32"	6"	42"x60"
FREE STANDING PUMP OUT FOR PIPE SIZES GREATER THAN 6"				
8"	15"	36"	8"	---
10"	17"	44"	10"	---
12"	20"	48"	12"	---
14" & LARGER	-	-	14" & LARGER	---

CONCRETE WET WELL DIMENSIONS

WET WELL I.D.	WALL THICKNESS (MIN)	TOP SLAB THICKNESS (MIN)
8'-0"	0'-9"	0'-10"
10'-0"	1'-0"	1'-0"
12'-0"	1'-0"	1'-0"

POLYMER WET WELL DIMENSIONS

WET WELL I.D.	WALL THICKNESS (MIN)	TOP SLAB THICKNESS (MIN)
8'-0"	0'-6"	0'-10"
10'-0"	0'-6 1/2"	0'-10"
12'-0"	0'-7"	1'-0"

MCC PANEL

THE COMBINED MOTOR CONTROL AND RTV PANEL SHALL BE AS NOTED BELOW. CONTRACTOR SHALL SUBMIT APPLICABLE SHOP DRAWING PACKAGE.SEE JEA.COM FOR DETAILS.

- ☐ FIXED SPEED PANEL: 240/120 VOLT, 3 PHASE, OPEN DELTA, FULL VOLTAGE MOTOR STARTING, 15 STARTS PER HOUR
- ☐ FIXED SPEED PANEL:: 480 VOLT, 3 PHASE, FULL VOLTAGE MOTOR STARTING, 15 STARTS PER HOUR
- ☐ 1P-3P VFD PANEL:: 480/277 VOLT, 3 PHASE, WYE, FULL VOLTAGE MOTOR STARTING, 15 STARTS PER HOUR
- ☐ 3P VFD PANEL:: 480/277 VOLT, 3 PHASE, WYE, REDUCED VOLTAGE MOTOR STARTING, 10 STARTS PER HOUR

MANUAL TRANSFER SWITCH

☐	JTD364SSMCQC	200 AMP
☐	JTD365SSMCQC	400 AMP

STANDBY BACKUP PUMP

MANUFACTURER		NPSHR	
MODEL		ENGINE H.P.	
FLOW GPM @ TDH		SUCTION PIPE SIZE	
RPM		DISCHARGE PIPE SIZE	

GENERAL NOTES:

1. ALL WORK SHALL COMPLY WITH SPECIFICATIONS, SECTION 433, "SUBMERSIBLE SEWAGE PUMPING STATIONS" IN JEA WATER AND SEWER STANDARDS MANUAL.
2. PENETRATION SOIL BORING INFORMATION, TAKEN AT WET WELL LOCATION, SHALL BE SUBMITTED PRIOR TO DESIGN SUBMITTAL. SOIL BORING SHALL BE A MINIMUM OF 15' DEEPER THAN WET WELL BOTTOM OR UNTIL SUITABLE SOIL IS LOCATED UP TO A MAXIMUM OF 25' BELOW WET WELL BOTTOM.
3. ALL PIPING WITHIN AND EXTERNAL OF THE WET WELL SHALL BE FLANGED SCHEDULE 40, 316 STAINLESS STEEL. BUTT WELDING OF ANY PIPING (EXCEPT FOR THE EMERGENCY SUCTION PIPE IN THE WET WELL) IS NOT ALLOWED.
4. DUCTILE IRON ALL FITTINGS (90s, 45s, TEES ETC.) WITHIN AND EXTERNAL OF THE WET WELL SHALL BE FLANGED EPOXY LINED .
5. ALL NUTS, BOLTS AND ACCESSORIES WITHIN AND EXTERNAL OF THE WET WELL SHALL BE 316 STAINLESS STEEL AND SHALL BE COATED WITH A "NEVER SEIZE" TYPE COATING.
6. ALL EXTERIOR JOINTS OF PRECAST CONCRETE AND PRECAST POLYMER WET WELLS AND MANHOLES SHALL BE SEALED WITH A 18" WIDE RUBBERIZED ASPHALT MEMBRANE TAPE. (SEE JEA SPEC).
7. THE VOID AREAS BETWEEN TOP SLAB AND FORCE MAIN PIPE SHALL BE SEALED W/EUCOLASTIC BY EUCLID CITEM CO. OR APPROVED EQUAL SEAL. ALL OTHER OPENINGS IN CONCRETE TOP WITH NON-SHRINK GROUT, EXCEPT AS DESCRIBED IN NOTE #6. PROVIDE INSECT SCREEN SECURED TO TOP.
8. PROVIDE 6" x 6" OPENING THROUGH THE CONCRETE TOP OF THE WET WELL AND INSERT 8" x 8" x 1 1/4" THICK ALUMINUM GRATE VENT CONSTRUCTED OF 1 1/4" WIDE x 1/8" MATERIAL. .
9. PROVIDE 2" PIPE (PVC, SCH. 80) THROUGH CONCRETE TOP WITH CAPPED TOP AND OPEN END BOTTOM). SEAL AROUND CONCRETE TOP WITH NON-SHRINK GROUT. IN THE FUTURE, THIS PIPE WILL BE UTILIZED FOR THE CONSTRUCTION OF THE AIR-RELEASE VALVE PIPING. EXTEND 18" ABOVE TOP OF WET WELL.
10. SITE GRADE IS 6" (MIN) BELOW TOP ELEVATION OF PUMP STATION SLAB.
11. IN SILTS, CLAY OR HIGHLY ORGANIC SOILS (FINE-GRAINED SOILS INCLUDING SOIL GROUPS ML, CL, OL, MH, CH, OH AND PT) THE SOILS SHALL BE OVER-EXCAVATED AN ADDITIONAL 12" (AT A MIN.) AND BACKFILL WITH GRANULAR BACKFILL (57 STONE).
12. PRECAST CONCRETE WET WELL SHALL MEET A.S.T.M. C-478 STANDARD, ENTIRE INSIDE SURFACE OF WET WELL & TOP SLAB SHALL BE LINED WITH APPROVED LINER. LINER INSTALLER MUST BE CERTIFIED BY LINER MANUFACTURER. SUBMIT CERTIFICATION WITH SHOP DRAWING SUBMITTAL. SEE SPECIFICATIONS. THE EXCAVATED HOLE SHALL BE DRY (DE-WATERED) DURING THE WET WELL INSTALLATION. (SEE WET WELL DIMENSIONS TABLE)
13. PRECAST POLYMER CONCRETE WET WELL SHALL MEET JEA POLYMER PRECAST STANDARD. THE EXCAVATED HOLE SHALL BE DRY (DE-WATERED) DURING THE WET WELL INSTALLATION. (SEE WET WELL DIMENSIONS TABLE)
14. IF ODOR CONTROL WILL NOT BE INSTALLED UPON COMPLETION THEN CONDUITS AND PIPING SHALL BE STUBBED OUT FOR EACH. SEE STUB OUT DETAIL SHEET
15. FLOW METER SHALL BE ULTRASONIC OR MAG METER. ULTRASONIC FLOW METER REQUIRES A FLOW METER PANEL. MAG METER REQUIRES BY PASS PIPING. SEE ULTRASONIC/MAG METER DETAIL ON MISCELLANEOUS DETAILS SHEET.
16. SEE REFERENCE FACILITIES STANDARDS FOR GENERATOR, ATS, BACKFLOW, BOLLARDS AND PAVEMENT SPECIFICATIONS. (HTTPS://WWW.JEA.COM/ENGIGNEERING_AND_CONSTRUCTION/FACILITIES/)
17. SEE JEA STANDARD SHEETS (AVAILABLE AT JEA.COM) FOR CONSTRUCTION DETAILS OF SPECIFIC COMPONENTS, INCLUDING ELECTRICAL.

DESIGN NOTES:

1. ENGINEER SHALL USE THIS PLAN AS A BASIS OF DESIGN FOR SITE SPECIFIC PUMP STATION. THESE NOTES TO BE ERASED ON COMPLETED DRAWING.
2. WET WELL SIZE:
   PUMP STATION 8'-0" I.D. MIN., 27' DEEP MAX.
3. MINIMUM FLOW RATE: 500 GPM EACH PUMP
4. MINIMUM ELECTRIC SERVICE SIZE:
   240 VOLT, 200 AMP., 3 PHASE, 4 WIRE
5. MINIMUM CONCRETE PAD SIZE: 50'x55'
6. MINIMUM JUNCTION MANHOLE SIZE: 5'-0" I.D.
   LOCATE ON SAME SIDE OF DRIVEWAY AS PUMP-OUT CONNECTION.
7. IT IS THE ENGINEER'S RESPONSIBILITY TO DESIGN THE SITE TO MEET FUNCTIONALITY AND SITE SPECIFIC CONDITIONS. HOWEVER, THE ENGINEER SHALL MAKE EVERY EFFORT TO CONFORM TO THE STANDARD DRAWING SHOWN HERE.
8. HOW TO DETERMINE TOWER OR POLE FOR SCADA (SEE ALSO SPEC SECTION 433):
   TO DETERMINE IF A POLE OR TOWER IS REQUIRED A RADIO PATH STUDY MUST FIRST BE CONDUCTED. THE RADIO PATH STUDY MUST BE DONE USING THE SAME TYPE OF RADIO USED IN THE SCADA PANEL AND MUST BE A MINIMUM OF -86DB RSSI. IF THE HEIGHT OF THE MINIMUM -86DB RSSI LEVEL IS LESS THAN OR EQUAL TO 20 FEET THEN A 20 FOOT POLE CAN BE USED. IF THE HEIGHT REQUIREMENTS ARE OVER 20 FEET THEN A TOWER MUST BE USED.
9. THE PUMP STATION TOP ELEVATION SHALL BE SET AT A MINIMUM OF 1' ABOVE THE "R" ELEVATION. THE "R" ELEVATION SHALL BE EQUAL TO THE DESIGN HIGH WATER LEVEL OR THE 100 YEAR FLOOD ELEVATION, WHICHEVER IS HIGHER.
10. THE TOP ELEVATION OF JUNCTION MAN HOLE SHALL MATCH THE TOP ELEVATION OF NEAREST ADJACENT CONCRETE STRUCTURE (PUMP STATION SLAB, DRIVE WAY OR CURB).
11. FLOW METER:
    ULTRASONIC FLOW METER OR MAG METER CONFIGURATION SHALL BE DESIGNED BY ENGINEER.

CONSTRUCTION NOTES:

1. SLOPE SITE CONCRETE 1" PER 8' TO DRAIN TOWARDS STREET OR OTHER ADJACENT CITY OR JEA OWNED DRAINAGE FACILITY.
2. CONTRACTOR MUST MAINTAIN LANDSCAPING UNTIL FINAL ACCEPTANCE AND SUPPLY ONE (1) YEAR WARRANTY FROM NURSERY SUPPLYING PLANTS FROM DATE OF ACCEPTANCE.
3. DEMARCATION BOX SHALL BE PLACED AS CLOSE AS POSSIBLE TO WET WELL. IT SHALL BE PLACED AT LEAST 3' FROM WET WELL HATCH AND AT LEAST 5' FROM VENTS. IT SHALL BE PLACED SO AS NOT TO INTERFERE WITH ACCESS TO THE WET WELL OR DISCHARGE APPARATUS, AND DOOR SHALL FACE AWAY FROM WET WELL.
4. SEE GROUNDING PLAN FOR ELECTRICAL SERVICE GROUNDING REQUIREMENTS (SEE GROUNDING DETAIL SHEET).
5. CONTRACTOR MUST KEEP COMPANY SIGN AND PHONE NUMBER ON FENCE UNTIL STATION ACCEPTED.
6. TRANSFORMERS SHALL BE LOCATED ON THE SAME SIDE OF PROPERTY AS METER CAN AND ELECTRICAL PANELS.
7. WET WELL LID SHALL UTILIZE STAPLE ASSEMBLY FOR LOCKING THE WET WELL.

SITE SPECIFIC

NO.	BY	DATE	REVISIONS
4.			
3.			
2.	LLOYD HENRY	9/25/2018	MANUAL TRANSFER SWITCH TABLE
1.			

DESIGN ENGINEER:
FLORIDA REGISTRATION NO.

DESIGNER:
DRAWN BY:
DATE:
CHECKED BY:
DATE:

JEA Building Community

JEA STANDARD CLASS TWO PUMP STATION WITH STANDBY BACKUP PUMP FOR PEAK FLOWS BETWEEN 441 TO 1000 GPM PLAN AND SECTION BY EXCEPTION ONLY

NO. SHEETS
SHEET NO.
DRAWING NO.
PROJ. NO.
DATE:
SCALE:

G:\Services\Shared\AutoCAD\henrlo\Water Standards\2021\PUMP STATION SITE SPECIFIC.dwg Current Layout Tab = CLASS TWO PUMP STATION WITH STANDBY BACKUP PUMP STATION DATA Thu Feb 25, 2021 – 15:14

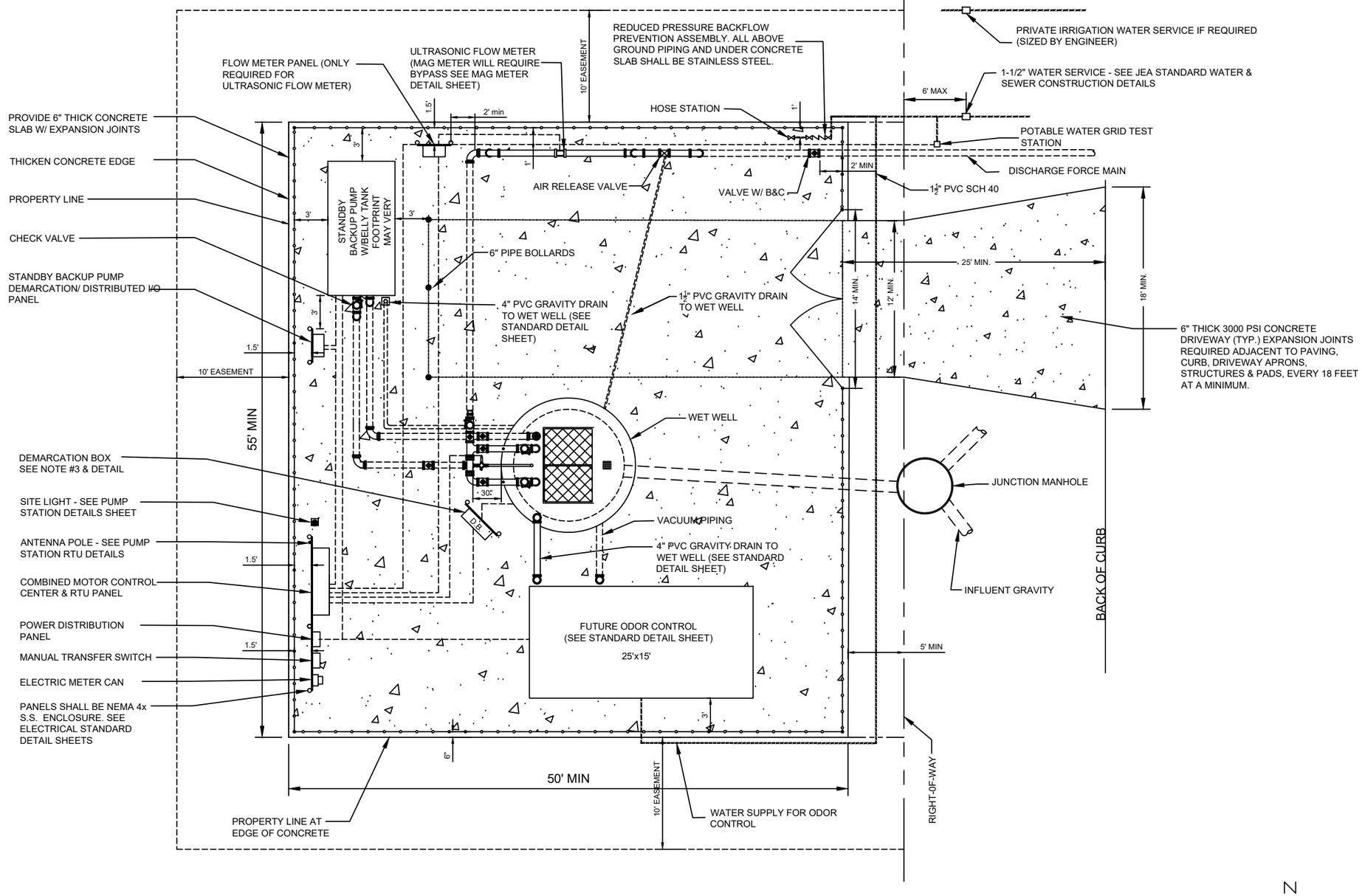

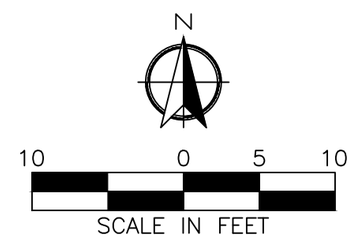

SITE SPECIFIC

NO.	BY	DATE	REVISIONS
4.			
3.			
2.	LLOYD HENRY	9/25/2018	UPDATED ELECTRICAL PANEL
1.			

DESIGN ENGINEER
FLORIDA REGISTRATION NO.

DESIGNER:
DRAWN BY:
DATE:
CHECKED BY:
DATE:

JEA Building Community

JEA STANDARD CLASS TWO PUMP STATION
WITH STANDBY BACKUP PUMP
FOR PEAK FLOWS BETWEEN 441 TO 1000 GPM
PLAN AND SECTION BY EXCEPTION ONLY

PROJ. NO.
DATE:
SCALE: 1" = 10'

NO. SHEETS
SHEET NO.
DRAWING NO.

G:\Services\Shared\AutoCAD\henrio\Water Standards\2021\PUMP STATION SITE SPECIFIC.dwg Current Layout Tab = CLASS TWO PUMP STATION WITH STANDBY BACKUP PUMP Thu Feb 25, 2021 – 15:14

Xrefs Attached=

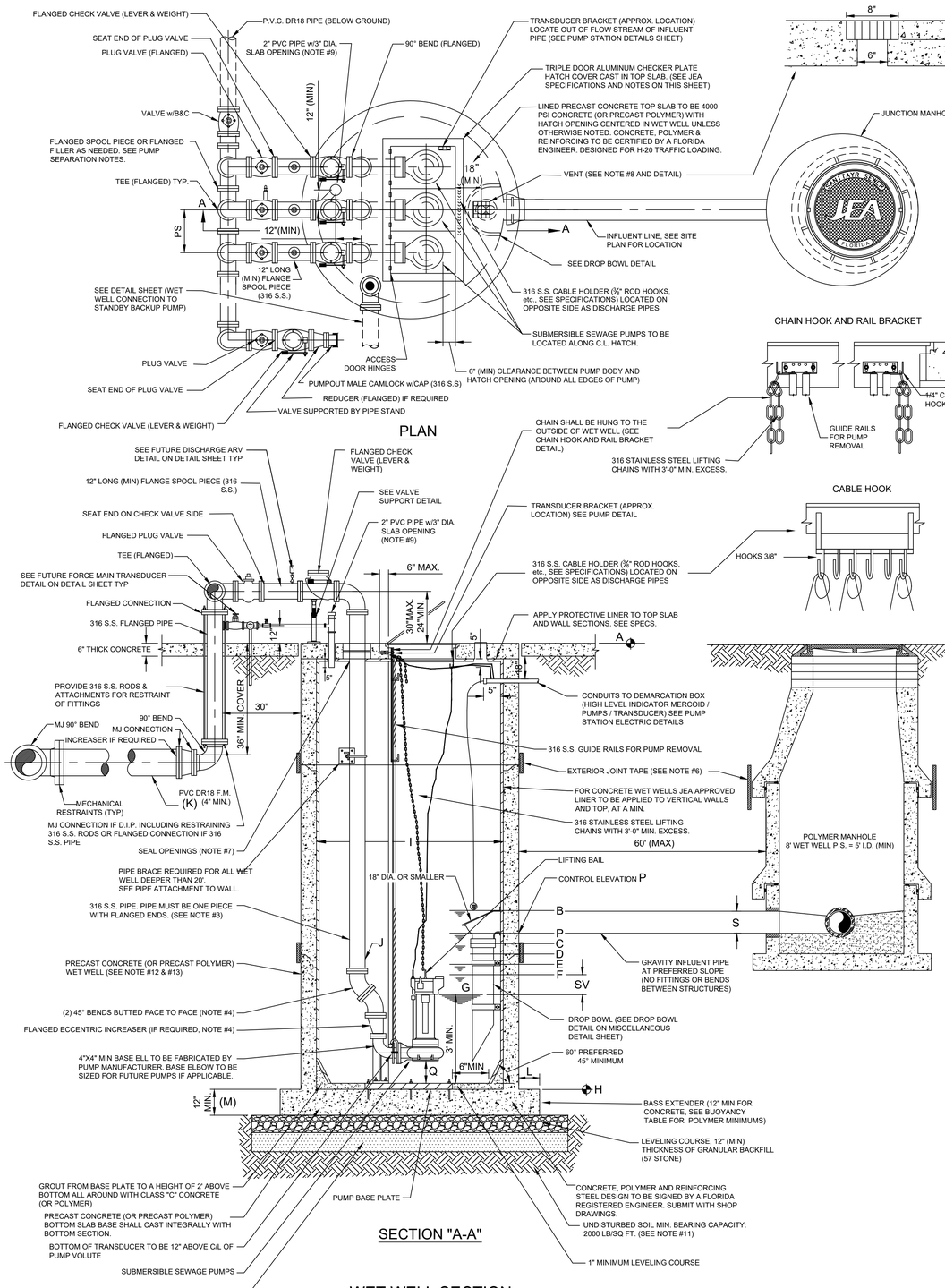

PUMP STATION INFORMATION
SCHEDULE OF ELEVATIONS

PUMP STATION STREET ADDRESS	TOP ELEV (NOTE 9)	MERCOID LEVEL	ALARM ELEVATION	2ND LAG ON ELEVATION	1st LAG PUMP ON ELEVATION	LEAD PUMP ON ELEVATION	PUMP OFF ELEVATION	BOTTOM ELEVATION (NOTE 1)	WET WELL DIA.	DISCHARGE PIPE DIA.	DISCHARGE F.M. DIA.	BASE EXTENDER	BOTTOM SLAB THICKNESS (INCHES)	PER HOLE DIA. (SEE NOTES)	CONTROL ELEVATION	PUMP SUCTION CLEARANCE (INCHES)	SITE FLOOD ELEVATION (DESIGN NOTE 10)	INFLUENT SIZE	HATCH SIZE (SEE TABLE BELOW)
	A	B	C	D	E	F	G	H	I	J	K	L	M	N	P	Q	R	S	
	R + 1.0	P + 0.5'	P - 0.5'	---	P - 1.5'	P - 2.0'	F - SV	G - 3'	---	---	---	---	---	---	---	---	---	---	---
	---	---	---	---	---	---	---	---	---	---	---	---	---	---	---	---	---	---	

	ALL PUMPS			
PUMP MANUFACTURER	WILO/EMU	FLYGT	HYDROMATIC	KSB
MODEL	---	---	---	---
IMPELLER	---	---	---	---
PUMP DISCHARGE	---	---	---	---
MOTOR (RPM)	---	---	---	---
HORSEPOWER (HP)	---	---	---	---
PHASE/VOLT/AMPS (NOTE #3)	---	---	---	---
AIC (SEE NOTE #4)	---	---	---	---
DESIGN POINT (GPM) @ TDH (FT)	---	---	---	---
RUNOUT POINT (GPM) @ TDH (FT)	---	---	---	---
EMERGENCY MAIN	---	---	---	---
NORMAL SERVICE MAIN	---	---	---	---
CB #1 TO PUMP NO. 1	---	---	---	---
CB #2 TO PUMP NO. 2	---	---	---	---
CONTROL PANEL MCB	---	---	---	---
STARTER (SIZE & TYPE)	---	---	---	---
ELECTRIC SERVICE (TYPE & SIZE)	---	---	---	---

PUMP STATION INFORMATION NOTES:

1. "SV" = STORAGE VOLUME PER DESIGN ENGINEER AND SHALL BE DESIGNED FOR 12 MINUTE CYCLE TIME, MINIMUM STORAGE DEPTH SHALL BE 24".
2. IF PUMP MANUFACTURER REQUIRES A GREATER SEPARATION, THAT SEPARATION SHALL BE USED WITH THE ADDITION OF FLANGED FILLERS OR SPOOL PIECES. THE DIFFERENT SEPARATION MUST BE APPROVED BY JEA PRIOR TO CONSTRUCTION AND SHALL BE PROVIDED AT NO ADDITIONAL COST TO JEA.
3. ALL PUMP MOTORS SHALL BE 3 PHASE.
4. AMPERE INTERRUPTING CAPACITY (AIC): CONTACT THE ELECTRICAL UTILITY COMPANY FOR THIS DATA IF AVAILABLE.
5. A MANUAL TRANSFER SWITCH SHALL BE PROVIDED.

POLYMER CONCRETE FLOATATION COLLARS

	DEPTH 0-10FT		DEPTH 11-15FT		DEPTH 16-20FT		DEPTH 21-30FT	
WET WELL I.D.	MIN BASE EXTENDER (IN)	MIN WEIGHT OF TOTAL STRUCTURE (LBS)	MIN BASE EXTENDER (IN)	MIN WEIGHT OF TOTAL STRUCTURE (LBS)	MIN BASE EXTENDER (IN)	MIN WEIGHT OF TOTAL STRUCTURE (LBS)	MIN BASE EXTENDER (IN)	MIN WEIGHT OF TOTAL STRUCTURE (LBS)
8'-0"	3	35600	3	37600	2	46000	—	5200
10'-0"	5	57580	5	75000	5	78700	3	91100
12'-0"	8	82900	8	113200	8	134500	7	139000

DISCHARGE PIPE DATA (WITHIN WET WELL)

PIPE SIZE	PIPE HOLE DIA.	PUMP SEPARATION	MIN PUMPOUT SIZE	HATCH SIZE (MIN.)
(J)	(N)	(PS)	(PO)	
4"	10"	26"	4"	---
6"	12"	32"	6"	---
FREE STANDING PUMP OUT FOR PIPE SIZES GREATER THAN 6"				
8"	15"	36"	8"	---
10"	17"	44"	10"	---
12"	20"	48"	12"	---
14" & LARGER	-	-	14" & LARGER	---

CONCRETE WET WELL DIMENSIONS

WET WELL I.D.	WALL THICKNESS (MIN)	TOP SLAB THICKNESS (MIN)
10'-0"	1'-0"	1'-0"
12'-0"	1'-0"	1'-0"

POLYMER WET WELL DIMENSIONS

WET WELL I.D.	WALL THICKNESS (MIN)	TOP SLAB THICKNESS (MIN)
10'-0"	0'-6 1/2"	0'-10"
12'-0"	0'-7"	1'-0"

MCC PANEL

THE COMBINED MOTOR CONTROL AND RTV PANEL SHALL BE AS NOTED BELOW. CONTRACTOR SHALL SUBMIT APPLICABLE SHOP DRAWING PACKAGE,SEE JEA.COM FOR DETAILS.

- ☐ FIXED SPEED PANEL: 240/120 VOLT, 3 PHASE, OPEN DELTA, FULL VOLTAGE MOTOR STARTING, 15 STARTS PER HOUR
- ☐ FIXED SPEED PANEL:: 480 VOLT, 3 PHASE, FULL VOLTAGE MOTOR STARTING, 15 STARTS PER HOUR
- ☐ 1P-3P VFD PANEL:: 480/277 VOLT, 3 PHASE, WYE, FULL VOLTAGE MOTOR STARTING, 15 STARTS PER HOUR
- ☐ 3P VFD PANEL:: 480/277 VOLT, 3 PHASE, WYE, REDUCED VOLTAGE MOTOR STARTING, 10 STARTS PER HOUR

STANDBY BACKUP PUMP

MANUFACTURER		NPSHR	
MODEL		ENGINE H.P.	
FLOW GPM @ TDH		SUCTION PIPE SIZE	
RPM		DISCHARGE PIPE SIZE	

GENERATOR

MANUFACTURER	
MODEL	
KW	

MANUAL TRANSFER SWITCH

☐ JTD364SSMCQC	200 AMP
☐ JTD365SSMCQC	400 AMP

GENERAL NOTES:

1. ALL WORK SHALL COMPLY WITH SPECIFICATIONS, SECTION 433, "SUBMERSIBLE SEWAGE PUMPING STATIONS" IN JEA WATER AND SEWER STANDARDS MANUAL.
2. PENETRATION SOIL BORING INFORMATION, TAKEN AT WET WELL LOCATION, SHALL BE SUBMITTED PRIOR TO DESIGN SUBMITTAL. SOIL BORING SHALL BE A MINIMUM OF 15' DEEPER THAN WET WELL BOTTOM OR UNTIL SUITABLE SOIL IS LOCATED UP TO A MAXIMUM OF 25' BELOW WET WELL BOTTOM.
3. ALL PIPING WITHIN AND EXTERNAL OF THE WET WELL SHALL BE FLANGED SCHEDULE 40, 316 STAINLESS STEEL. BUTT WELDING OF ANY PIPING (EXCEPT FOR THE EMERGENCY SUCTION PIPE IN THE WET WELL) IS NOT ALLOWED.
4. DUCTILE IRON FITTINGS (90s, 45s, TEES ETC.) WITHIN AND EXTERNAL OF THE WET WELL SHALL BE FLANGED EPOXY LINED .
5. ALL NUTS, BOLTS AND ACCESSORIES WITHIN AND EXTERNAL OF THE WET WELL SHALL BE 316 STAINLESS STEEL AND SHALL BE COATED WITH A "NEVER SEIZE" TYPE COATING.
6. ALL EXTERIOR JOINTS OF PRECAST CONCRETE AND PRECAST POLYMER WET WELLS SHALL AND MANHOLES BE SEALED WITH A 18" WIDE RUBBERIZED ASPHALT MEMBRANE TAPE. (SEE JEA SPEC).
7. THE VOID AREAS BETWEEN TOP SLAB AND FORCE MAIN PIPE SHALL BE SEALED W/EUCOLASTIC BY EUCLID CITEM CO. OR APPROVED EQUAL SEAL. ALL OTHER OPENINGS IN CONCRETE TOP WITH NON-SHRINK GROUT, EXCEPT AS DESCRIBED IN NOTE #6. PROVIDE INSECT SCREEN SECURED TO TOP.
8. PROVIDE 6" x 6" OPENING THROUGH THE CONCRETE TOP OF THE WET WELL AND INSERT 8" x 8" x 1 ¼" THICK ALUMINUM GRATE VENT CONSTRUCTED OF 1 ¼" WIDE x ⅜" MATERIAL.
9. PROVIDE 2" PIPE (PVC, SCH. 80) THROUGH CONCRETE TOP WITH CAPPED TOP AND OPEN END BOTTOM). SEAL AROUND CONCRETE TOP WITH NON-SHRINK GROUT. IN THE FUTURE, THIS PIPE WILL BE UTILIZED FOR THE CONSTRUCTION OF THE AIR-RELEASE VALVE PIPING. EXTEND 18" ABOVE TOP OF WET WELL.
10. SITE GRADE IS 6" (MIN) BELOW TOP ELEVATION OF PUMP STATION SLAB.
11. IN SILTS, CLAY OR HIGHLY ORGANIC SOILS (FINE-GRAINED SOILS INCLUDING SOIL GROUPS ML, CL, OL, MH, CH, OH AND PT) THE SOILS SHALL BE OVER-EXCAVATED AN ADDITIONAL 12" (AT A MIN.) AND BACKFILL WITH GRANULAR BACKFILL (57 STONE).
12. PRECAST CONCRETE WET WELL SHALL MEET A.S.T.M. C-478 STANDARD, ENTIRE INSIDE SURFACE OF WET WELL & TOP SLAB SHALL BE LINED WITH APPROVED LINER. LINER INSTALLER MUST BE CERTIFIED BY LINER MANUFACTURER. SUBMIT CERTIFICATION WITH SHOP DRAWING SUBMITTAL. SEE SPECIFICATIONS. THE EXCAVATED HOLE SHALL BE DRY (DE-WATERED) DURING THE WET WELL INSTALLATION. (SEE WET WELL DIMENSIONS TABLE)
13. PRECAST POLYMER CONCRETE WET WELL SHALL MEET JEA POLYMER PRECAST STANDARD. THE EXCAVATED HOLE SHALL BE DRY (DE-WATERED) DURING THE WET WELL INSTALLATION. (SEE WET WELL DIMENSIONS TABLE)
14. IF ODOR CONTROL WILL NOT BE INSTALLED UPON COMPLETION THEN CONDUITS AND PIPING SHALL BE STUBBED OUT FOR EACH. SEE STUB OUT DETAIL SHEET
15. IF SOLID MANAGEMENT SYSTEM WILL NOT BE INSTALLED UPON COMPLETION THEN VACUUM PIPING FROM ODDER CONTROL SHALL BE STUB OUT AND A VACUUM PIPE SHALL BE INSTALL TO THE THE WET FROM THE ODDER CONTROL.
16. FLOW METER SHALL BE ULTRASONIC OR MAG METER. ULTRASONIC FLOW METER REQUIRES A FLOW METER PANEL. MAG METER REQUIRES BY PASS PIPING. SEE ULTRASONIC/MAG METER DETAIL ON MISCELLANEOUS DETAILS SHEET.
17. SEE REFERENCE FACILITIES STANDARDS FOR GENERATOR, ATS, BACKFLOW, BOLLARDS AND PAVEMENT SPECIFICATIONS. (HTTPS://WWW.JEA.COM/ENGINGEERING_AND_CONSTRUCTION/FACILITIES/)
18. SEE JEA STANDARD SHEETS (AVAILABLE AT JEA.COM) FOR CONSTRUCTION DETAILS OF SPECIFIC COMPONENTS, INCLUDING ELECTRICAL.

DESIGN NOTES:

1. ENGINEER SHALL USE THIS PLAN AS A BASIS OF DESIGN FOR SITE SPECIFIC PUMP STATION. THESE NOTES TO BE ERASED ON COMPLETED DRAWING.
2. TRIPLEX PUMP STATION SHALL BE USED FOR PUMP FLOW GREATER THAN 1000 G.P.M.
3. BUILDING REQUIRED FOR CLASS 3 IF PUMPS ARE 76-200HP OR FLA >= 400 A OR > 3 PUMPS.
4. WET WELL SIZE:
   8" AND SMALLER PUMP DISCHARGE 10'-0" I.D. MIN., 27' DEEP MAX.
   10" AND LARGER PUMP DISCHARGE 12'-0" I.D. MIN., 27' DEEP MAX.
5. MINIMUM FLOW RATE: 500 GPM EACH PUMP
6. MINIMUM ELECTRIC SERVICE SIZE: 240 VOLT, 200 AMP., 3 PHASE, 4 WIRE
7. MINIMUM CONCRETE PAD SIZE: 95'x90'
8. MINIMUM JUNCTION MANHOLE SIZE: 5'-0" I.D. LOCATE ON SAME SIDE OF DRIVEWAY AS PUMP-OUT CONNECTION.
9. IT IS THE ENGINEER'S RESPONSIBILITY TO DESIGN THE SITE TO MEET FUNCTIONALITY AND SITE SPECIFIC CONDITIONS. HOWEVER, THE ENGINEER SHALL MAKE EVERY EFFORT TO CONFORM TO THE STANDARD DRAWING SHOWN HERE.
10. ENGINEER SHALL DESIGN STANDBY BACKUP PUMP SUCTION PIPING TO MEET STATION PEAK FLOW.
11. HOW TO DETERMINE TOWER OR POLE FOR SCADA (SEE ALSO SPEC SECTION 433): TO DETERMINE IF A POLE OR TOWER IS REQUIRED A RADIO PATH STUDY MUST FIRST BE CONDUCTED. THE RADIO PATH STUDY MUST BE DONE USING THE SAME TYPE OF RADIO USED IN THE SCADA PANEL AND MUST BE A MINIMUM OF -86DB RSSI. IF THE HEIGHT OF THE MINIMUM -86DB RSSI LEVEL IS LESS THAN OR EQUAL TO 20 FEET THEN A 20 FOOT POLE CAN BE USED. IF THE HEIGHT REQUIREMENTS ARE OVER 20 FEET THEN A TOWER MUST BE USED.
12. THE PUMP STATION TOP ELEVATION SHALL BE SET AT A MINIMUM OF 1' ABOVE THE "R" ELEVATION. THE "R" ELEVATION SHALL BE EQUAL TO THE DESIGN HIGH WATER LEVEL OR THE 100 YEAR FLOOD ELEVATION, WHICHEVER IS HIGHER.
13. THE TOP ELEVATION OF JUNCTION MAN HOLE SHALL MATCH THE TOP ELEVATION OF NEAREST ADJACENT CONCRETE STRUCTURE (PUMP STATION SLAB, DRIVE WAY OR CURB).
14. FLOW METER: ULTRASONIC FLOW METER OR MAG METER CONFIGURATION SHALL BE DESIGNED BY ENGINEER.
15. STANDBY BACKUP PUMP SHALL OPERATE IN LEAD LAG CONFIGURATION.
16. SECOND STANDBY BACKUP PUMP IS NOT REQUIRED BUT MAY BE NECESSARY TO ACHIEVE REQUIRED HYDRAULIC CONDITIONS.

CONSTRUCTION NOTES:

1. SLOPE SITE CONCRETE 1" PER 8' TO DRAIN TOWARDS STREET OR OTHER ADJACENT CITY OR JEA OWNED DRAINAGE FACILITY.
2. CONTRACTOR MUST MAINTAIN LANDSCAPING UNTIL FINAL ACCEPTANCE AND SUPPLY ONE (1) YEAR WARRANTY FROM NURSERY SUPPLYING PLANTS FROM DATE OF ACCEPTANCE.
3. DEMARCATION BOX SHALL BE PLACED AS CLOSE AS POSSIBLE TO WET WELL. IT SHALL BE PLACED AT LEAST 3' FROM WET WELL HATCH AND AT LEAST 5' FROM VENTS. IT SHALL BE PLACED SO AS NOT TO INTERFERE WITH ACCESS TO THE WET WELL OR DISCHARGE APPARATUS, AND DOOR SHALL FACE AWAY FROM WET WELL.
4. SEE GROUNDING PLAN FOR ELECTRICAL SERVICE GROUNDING REQUIREMENTS (SEE JEA.COM).
5. CONTRACTOR SHALL KEEP COMPANY SIGN AND PHONE NUMBER ON FENCE UNTIL STATION ACCEPTED.
6. TRANSFORMERS SHALL BE LOCATED ON THE SAME SIDE OF PROPERTY AS METER CAN AND ELECTRICAL PANELS.
7. WET WELL LID SHALL UTILIZE STAPLE ASSEMBLY FOR LOCKING THE WET WELL.

SITE SPECIFIC

NO.	BY	DATE	REVISIONS
4.			
3.			
2.			
1.	LLOYD HENRY	9/25/2018	MANUAL TRANSFER SWITCH

DESIGN ENGINEER
FLORIDA REGISTRATION NO.

DESIGNER:
DRAWN BY:
DATE:
CHECKED BY:
DATE:

JEA Building Community

JEA STANDARD
CLASS THREE PUMP STATION
FOR PEAK FLOWS BETWEEN 1001-2000 GPM
PLAN AND SECTION

NO. SHEETS
SHEET NO.
DRAWING NO.
PROJ. NO.
DATE:
SCALE:

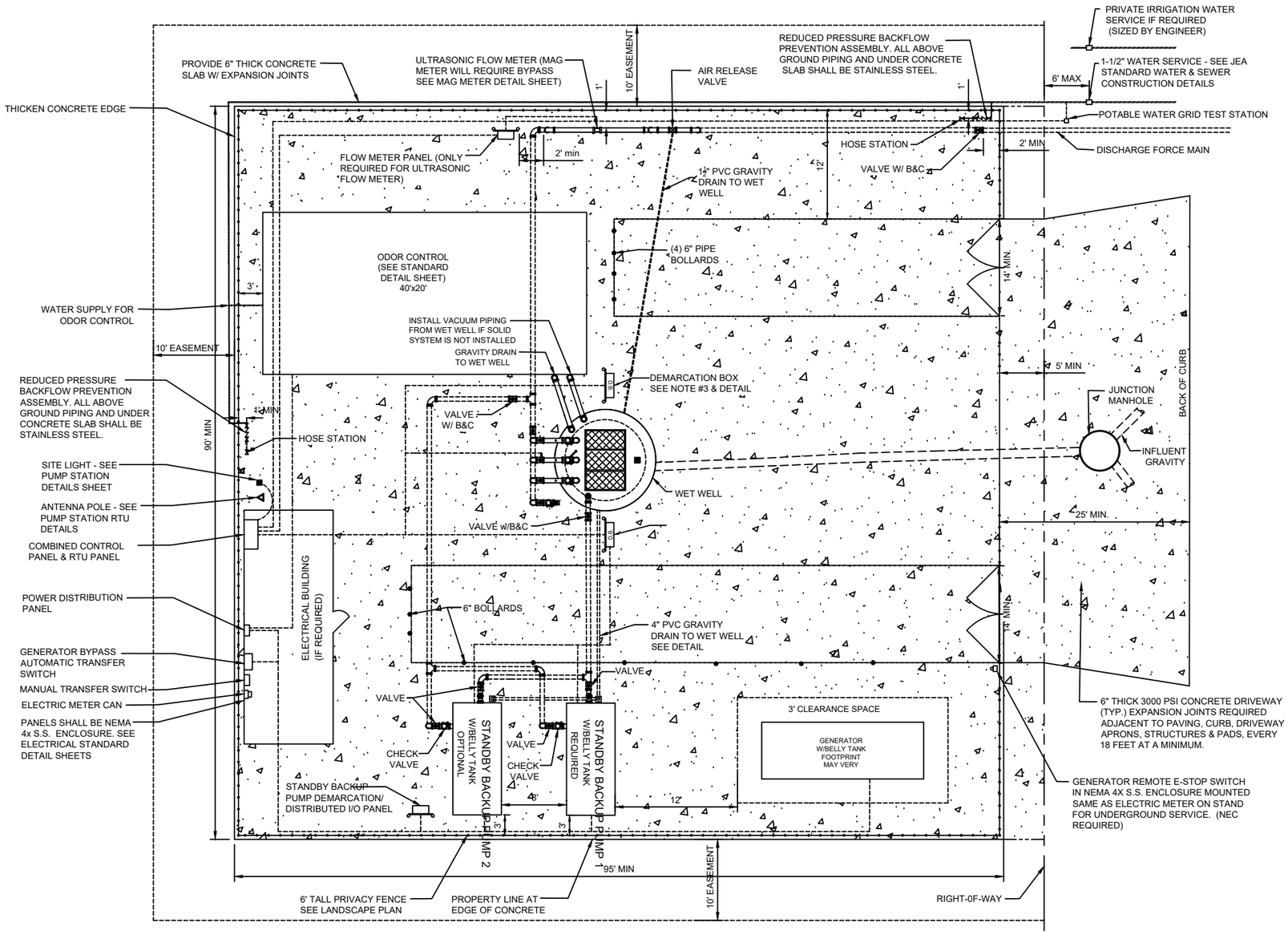

SITE SPECIFIC

NO.	BY	DATE	REVISIONS
4.			
3.			
2.			
1.	LLOYD HENRY	9/25/018	UPDATED ELECTRICAL PANEL

DESIGN ENGINEER

FLORIDA REGISTRATION NO.

DESIGNED:
DRAWN BY:
DATE:
CHECKED BY:
DATE:

JEA Building Community

JEA STANDARD
CLASS THREE PUMP STATION
FOR PEAK FLOWS BETWEEN 1001-2000 GPM
PLAN AND SECTION

PROJ. NO.
DATE:
SCALE: 1" = 10'

NO. SHEETS
SHEET NO.
DRAWING NO.

G:\Services\Shared\AutoCAD\henrio\Water Standards\2021\PUMP STATION SITE SPECIFIC.dwg Current Layout Tab = CLASS THREE PUMP STATION SITE PLAN. Thu Feb 25, 2021 - 15:14

Xrefs Attached=

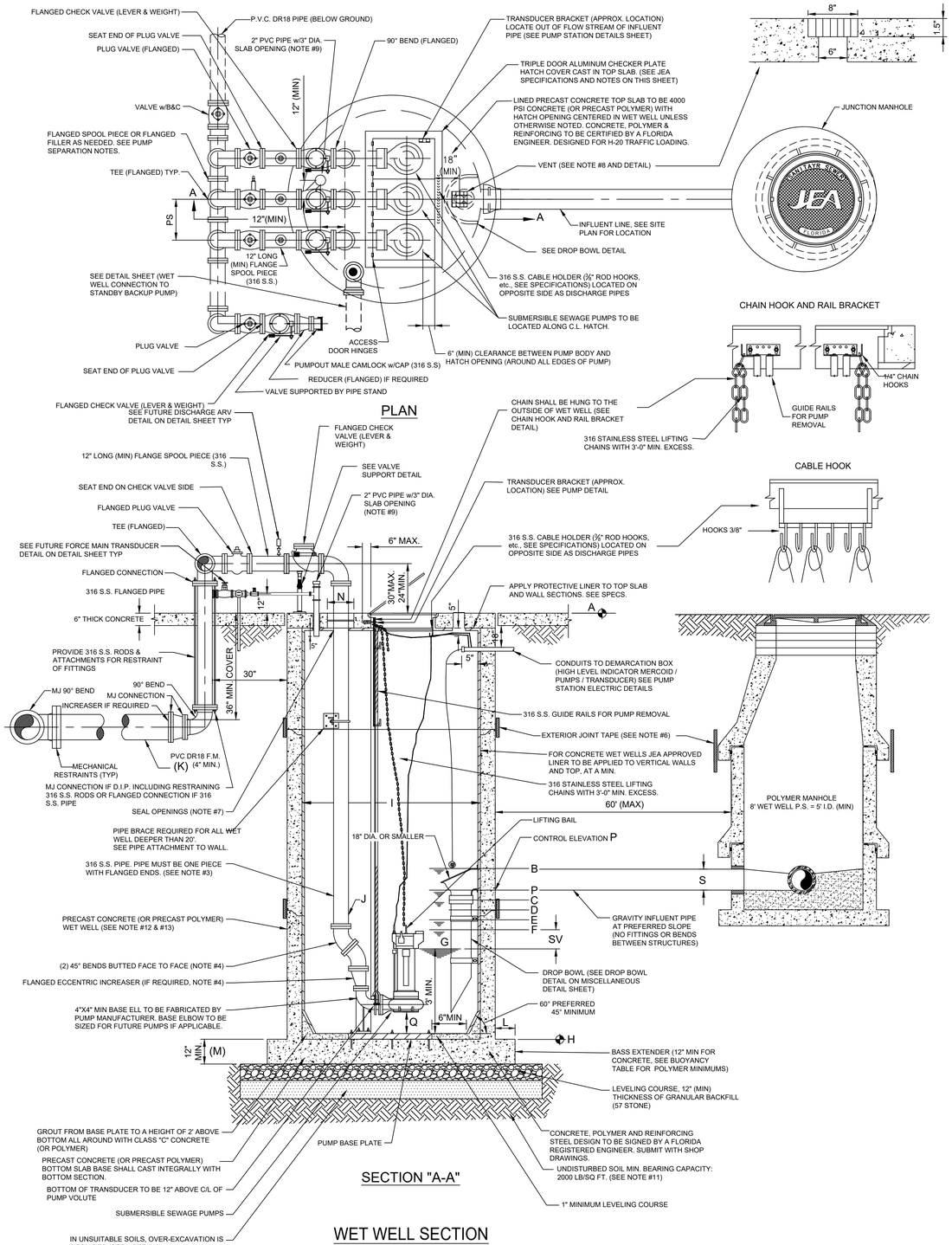

PUMP STATION INFORMATION
SCHEDULE OF ELEVATIONS

PUMP STATION STREET ADDRESS	TOP ELEV (NOTE 9)	MERCOID LEVEL	ALARM ELEVATION	2ND LAG ON ELEVATION	1st LAG PUMP ON ELEVATION	LEAD PUMP ON ELEVATION	PUMP OFF ELEVATION	BOTTOM ELEVATION (NOTE 1)	WET WELL DIA.	DISCHARGE PIPE DIA.	DISCHARGE F.M. DIA.	BASE EXTENDER	BOTTOM SLAB THICKNESS (INCHES)	PER HOLE DIA. (SEE NOTES)	CONTROL ELEVATION	PUMP SUCTION CLEARANCE (INCHES)	SITE FLOOD ELEVATION (DESIGN NOTE 10)	INFLUENT SIZE	HATCH SIZE (SEE TABLE BELOW)
	A	B	C	D	E	F	G	H	I	J	K	L	M	N	P	Q	R	S	
	R + 1.0	P + 0.5'	P - 0.5'	---	P - 1.5'	P - 2.0'	F - SV	G - 3'	---	---	---	---	---	---	---	---	---	---	---
	---	---	---	---	---	---	---	---	---	---	---	---	---	---	---	---	---	---	

	ALL PUMPS			
PUMP MANUFACTURER	WILO/EMU	FLYGT	HYDROMATIC	KSB
MODEL	---	---	---	---
IMPELLER	---	---	---	---
PUMP DISCHARGE	---	---	---	---
MOTOR (RPM)	---	---	---	---
HORSEPOWER (HP)	---	---	---	---
PHASE/VOLT/AMPS (NOTE #3)	---	---	---	---
AIC (SEE NOTE #4)	---	---	---	---
DESIGN POINT (GPM) @ TDH (FT)	---	---	---	---
RUNOUT POINT (GPM) @ TDH (FT)	---	---	---	---
EMERGENCY MAIN	---	---	---	---
NORMAL SERVICE MAIN	---	---	---	---
CB #1 TO PUMP NO. 1	---	---	---	---
CB #2 TO PUMP NO. 2	---	---	---	---
CONTROL PANEL MCB	---	---	---	---
STARTER (SIZE & TYPE)	---	---	---	---
ELECTRIC SERVICE (TYPE & SIZE)	---	---	---	---

PUMP STATION INFORMATION NOTES:

1. "SV" = STORAGE VOLUME PER DESIGN ENGINEER AND SHALL BE DESIGNED FOR 12 MINUTE CYCLE TIME, MINIMUM STORAGE DEPTH SHALL BE 24".
2. IF PUMP MANUFACTURER REQUIRES A GREATER SEPARATION, THAT SEPARATION SHALL BE USED WITH THE ADDITION OF FLANGED FILLERS OR SPOOL PIECES. THE DIFFERENT SEPARATION MUST BE APPROVED BY JEA PRIOR TO CONSTRUCTION AND SHALL BE PROVIDED AT NO ADDITIONAL COST TO JEA.
3. ALL PUMP MOTORS SHALL BE 3 PHASE.
4. AMPERE INTERRUPTING CAPACITY (AIC): CONTACT THE ELECTRICAL UTILITY COMPANY FOR THIS DATA IF AVAILABLE.
5. A MANUAL TRANSFER SWITCH SHALL BE PROVIDED.

POLYMER CONCRETE FLOATATION COLLARS

	DEPTH 0-10FT		DEPTH 11-15FT		DEPTH 16-20FT		DEPTH 21-30FT	
WET WELL I.D.	MIN BASE EXTENDER (IN)	MIN WEIGHT OF TOTAL STRUCTURE (LBS)	MIN BASE EXTENDER (IN)	MIN WEIGHT OF TOTAL STRUCTURE (LBS)	MIN BASE EXTENDER (IN)	MIN WEIGHT OF TOTAL STRUCTURE (LBS)	MIN BASE EXTENDER (IN)	MIN WEIGHT OF TOTAL STRUCTURE (LBS)
8'-0"	3	35600	3	37600	2	46000	—	5200
10'-0"	5	57580	5	75000	5	78700	3	91100
12'-0"	8	82900	8	113200	8	134500	7	139000

DISCHARGE PIPE DATA (WITHIN WET WELL)

PIPE SIZE	PIPE HOLE DIA.	PUMP SEPARATION	MIN PUMPOUT SIZE	HATCH SIZE (MIN.)
(J)	(N)	(PS)	(PO)	
4"	10"	26"	4"	---
6"	12"	32"	6"	---
FREE STANDING PUMP OUT FOR PIPE SIZES GREATER THAN 6"				
8"	15"	36"	8"	---
10"	17"	44"	10"	---
12"	20"	48"	12"	---
14" & LARGER	-	-	14" & LARGER	---

CONCRETE WET WELL DIMENSIONS

WET WELL I.D.	WALL THICKNESS (MIN)	TOP SLAB THICKNESS (MIN)
10'-0"	1'-0"	1'-0"
12'-0"	1'-0"	1'-0"

POLYMER WET WELL DIMENSIONS

WET WELL I.D.	WALL THICKNESS (MIN)	TOP SLAB THICKNESS (MIN)
10'-0"	0'-6 1/2"	0'-10"
12'-0"	0'-7"	1'-0"

MCC PANEL

THE COMBINED MOTOR CONTROL AND RTV PANEL SHALL BE AS NOTED BELOW. CONTRACTOR SHALL SUBMIT APPLICABLE SHOP DRAWING PACKAGE.SEE JEA.COM FOR DETAILS.

- ☐ FIXED SPEED PANEL: 240/120 VOLT, 3 PHASE, OPEN DELTA, FULL VOLTAGE MOTOR STARTING, 15 STARTS PER HOUR
- ☐ FIXED SPEED PANEL:: 480 VOLT, 3 PHASE, FULL VOLTAGE MOTOR STARTING, 15 STARTS PER HOUR
- ☐ 1P-3P VFD PANEL:: 480/277 VOLT, 3 PHASE, WYE, FULL VOLTAGE MOTOR STARTING, 15 STARTS PER HOUR
- ☐ 3P VFD PANEL:: 480/277 VOLT, 3 PHASE, WYE, REDUCED VOLTAGE MOTOR STARTING, 10 STARTS PER HOUR

MANUAL TRANSFER SWITCH

☐ JTD364SSMCQC	200 AMP
☐ JTD365SSMCQC	400 AMP

STANDBY BACKUP PUMP

MANUFACTURER		NPSHR	
MODEL		ENGINE H.P.	
FLOW GPM @ TDH		SUCTION PIPE SIZE	
RPM		DISCHARGE PIPE SIZE	

GENERATOR

MANUFACTURER	
MODEL	
KW	

GENERAL NOTES:

1. ALL WORK SHALL COMPLY WITH SPECIFICATIONS, SECTION 433, "SUBMERSIBLE SEWAGE PUMPING STATIONS" IN JEA WATER AND SEWER STANDARDS MANUAL.
2. PENETRATION SOIL BORING INFORMATION, TAKEN AT WET WELL LOCATION, SHALL BE SUBMITTED PRIOR TO DESIGN SUBMITTAL. SOIL BORING SHALL BE A MINIMUM OF 15' DEEPER THAN WET WELL BOTTOM OR UNTIL SUITABLE SOIL IS LOCATED UP TO A MAXIMUM OF 25' BELOW WET WELL BOTTOM.
3. ALL PIPING WITHIN AND EXTERNAL OF THE WET WELL SHALL BE FLANGED SCHEDULE 40, 316 STAINLESS STEEL. BUTT WELDING OF ANY PIPING (EXCEPT FOR THE EMERGENCY SUCTION PIPE IN THE WET WELL) IS NOT ALLOWED.
4. DUCTILE IRON FITTINGS (90s, 45s, TEES ETC.) WITHIN AND EXTERNAL OF THE WET WELL SHALL BE FLANGED EPOXY LINED .
5. ALL NUTS, BOLTS AND ACCESSORIES WITHIN AND EXTERNAL OF THE WET WELL SHALL BE 316 STAINLESS STEEL AND SHALL BE COATED WITH A "NEVER SEIZE" TYPE COATING.
6. ALL EXTERIOR JOINTS OF PRECAST CONCRETE AND PRECAST POLYMER WET WELLS SHALL AND MANHOLES BE SEALED WITH A 18" WIDE RUBBERIZED ASPHALT MEMBRANE TAPE. (SEE JEA SPEC).
7. THE VOID AREAS BETWEEN TOP SLAB AND FORCE MAIN PIPE SHALL BE SEALED W/EUCOLASTIC BY EUCLID CITEM CO. OR APPROVED EQUAL SEAL. ALL OTHER OPENINGS IN CONCRETE TOP WITH NON-SHRINK GROUT, EXCEPT AS DESCRIBED IN NOTE #6. PROVIDE INSECT SCREEN SECURED TO TOP.
8. PROVIDE 6" x 6" OPENING THROUGH THE CONCRETE TOP OF THE WET WELL AND INSERT 8" x 8" x 1 ¼" THICK ALUMINUM GRATE VENT CONSTRUCTED OF 1 ¼" WIDE x ⅛" MATERIAL.
9. PROVIDE 2" PIPE (PVC, SCH. 80) THROUGH CONCRETE TOP WITH CAPPED TOP AND OPEN END BOTTOM). SEAL AROUND CONCRETE TOP WITH NON-SHRINK GROUT. IN THE FUTURE, THIS PIPE WILL BE UTILIZED FOR THE CONSTRUCTION OF THE AIR-RELEASE VALVE PIPING. EXTEND 18" ABOVE TOP OF WET WELL.
10. SITE GRADE IS 6" (MIN) BELOW TOP ELEVATION OF PUMP STATION SLAB.
11. IN SILTS, CLAY OR HIGHLY ORGANIC SOILS (FINE-GRAINED SOILS INCLUDING SOIL GROUPS ML, CL, OL, MH, CH, OH AND PT) THE SOILS SHALL BE OVER-EXCAVATED AN ADDITIONAL 12" (AT A MIN.) AND BACKFILL WITH GRANULAR BACKFILL (57 STONE).
12. PRECAST CONCRETE WET WELL SHALL MEET A.S.T.M. C-478 STANDARD, ENTIRE INSIDE SURFACE OF WET WELL & TOP SLAB SHALL BE LINED WITH APPROVED LINER. LINER INSTALLER MUST BE CERTIFIED BY LINER MANUFACTURER. SUBMIT CERTIFICATION WITH SHOP DRAWING SUBMITTAL. SEE SPECIFICATIONS. THE EXCAVATED HOLE SHALL BE DRY (DE-WATERED) DURING THE WET WELL INSTALLATION. (SEE WET WELL DIMENSIONS TABLE)
13. PRECAST POLYMER CONCRETE WET WELL SHALL MEET JEA POLYMER PRECAST STANDARD. THE EXCAVATED HOLE SHALL BE DRY (DE-WATERED) DURING THE WET WELL INSTALLATION. (SEE WET WELL DIMENSIONS TABLE)
14. IF ODOR CONTROL WILL NOT BE INSTALLED UPON COMPLETION THEN CONDUITS AND PIPING SHALL BE STUBBED OUT FOR EACH. SEE STUB OUT DETAIL SHEET
15. IF SOLID MANAGEMENT SYSTEM WILL NOT BE INSTALLED UPON COMPLETION THEN VACUUM PIPING FROM ODDER CONTROL SHALL BE STUB OUT AND A VACUUM PIPE SHALL BE INSTALL TO THE THE WET FROM THE ODDER CONTROL.
16. FLOW METER SHALL BE ULTRASONIC OR MAG METER. ULTRASONIC FLOW METER REQUIRES A FLOW METER PANEL. MAG METER REQUIRES BY PASS PIPING. SEE ULTRASONIC/MAG METER DETAIL ON MISCELLANEOUS DETAILS SHEET.
17. SEE REFERENCE FACILITIES STANDARDS FOR GENERATOR, ATS, BACKFLOW, BOLLARDS AND PAVEMENT SPECIFICATIONS. (HTTPS://WWW.JEA.COM/ENGINGEERING_AND_CONSTRUCTION/FACILITIES/)
18. SEE JEA STANDARD SHEETS (AVAILABLE AT JEA.COM) FOR CONSTRUCTION DETAILS OF SPECIFIC COMPONENTS, INCLUDING ELECTRICAL.

DESIGN NOTES:

1. ENGINEER SHALL USE THIS PLAN AS A BASIS OF DESIGN FOR SITE SPECIFIC PUMP STATION. THESE NOTES TO BE ERASED ON COMPLETED DRAWING.
2. TRIPLEX PUMP STATION SHALL BE USED FOR PUMP FLOW GREATER THAN 1000 G.P.M.
3. BUILDING REQUIRED FOR CLASS 3 IF PUMPS ARE 76-200HP OR FLA >= 400 A OR > 3 PUMPS.
4. WET WELL SIZE:
   8" AND SMALLER PUMP DISCHARGE — 10'-0" I.D. MIN., 27' DEEP MAX.
   10" AND LARGER PUMP DISCHARGE — 12'-0" I.D. MIN., 27' DEEP MAX.
5. MINIMUM FLOW RATE: 500 GPM EACH PUMP
6. MINIMUM ELECTRIC SERVICE SIZE: 240 VOLT, 200 AMP., 3 PHASE, 4 WIRE
7. MINIMUM CONCRETE PAD SIZE: 95'x90'
8. MINIMUM JUNCTION MANHOLE SIZE: 5'-0" I.D. LOCATE ON SAME SIDE OF DRIVEWAY AS PUMP-OUT CONNECTION.
9. IT IS THE ENGINEER'S RESPONSIBILITY TO DESIGN THE SITE TO MEET FUNCTIONALITY AND SITE SPECIFIC CONDITIONS. HOWEVER, THE ENGINEER SHALL MAKE EVERY EFFORT TO CONFORM TO THE STANDARD DRAWING SHOWN HERE.
10. ENGINEER SHALL DESIGN STANDBY BACKUP PUMP SUCTION PIPING TO MEET STATION PEAK FLOW.
11. HOW TO DETERMINE TOWER OR POLE FOR SCADA (SEE ALSO SPEC SECTION 433): TO DETERMINE IF A POLE OR TOWER IS REQUIRED A RADIO PATH STUDY MUST FIRST BE CONDUCTED. THE RADIO PATH STUDY MUST BE DONE USING THE SAME TYPE OF RADIO USED IN THE SCADA PANEL AND MUST BE A MINIMUM OF -86DB RSSI. IF THE HEIGHT OF THE MINIMUM -86DB RSSI LEVEL IS LESS THAN OR EQUAL TO 20 FEET THEN A 20 FOOT POLE CAN BE USED. IF THE HEIGHT REQUIREMENTS ARE OVER 20 FEET THEN A TOWER MUST BE USED.
12. THE PUMP STATION TOP ELEVATION SHALL BE SET AT A MINIMUM OF 1' ABOVE THE "R" ELEVATION. THE "R" ELEVATION SHALL BE EQUAL TO THE DESIGN HIGH WATER LEVEL OR THE 100 YEAR FLOOD ELEVATION, WHICHEVER IS HIGHER.
13. THE TOP ELEVATION OF JUNCTION MAN HOLE SHALL MATCH THE TOP ELEVATION OF NEAREST ADJACENT CONCRETE STRUCTURE (PUMP STATION SLAB, DRIVE WAY OR CURB).
14. FLOW METER: ULTRASONIC FLOW METER OR MAG METER CONFIGURATION SHALL BE DESIGNED BY ENGINEER.
15. STANDBY BACKUP PUMP SHALL OPERATE IN LEAD LAG CONFIGURATION.

CONSTRUCTION NOTES:

1. SLOPE SITE CONCRETE 1" PER 8' TO DRAIN TOWARDS STREET OR OTHER ADJACENT CITY OR JEA OWNED DRAINAGE FACILITY.
2. CONTRACTOR MUST MAINTAIN LANDSCAPING UNTIL FINAL ACCEPTANCE AND SUPPLY ONE (1) YEAR WARRANTY FROM NURSERY SUPPLYING PLANTS FROM DATE OF ACCEPTANCE.
3. DEMARCATION BOX SHALL BE PLACED AS CLOSE AS POSSIBLE TO WET WELL. IT SHALL BE PLACED AT LEAST 3' FROM WET WELL HATCH AND AT LEAST 5' FROM VENTS. IT SHALL BE PLACED SO AS NOT TO INTERFERE WITH ACCESS TO THE WET WELL OR DISCHARGE APPARATUS, AND DOOR SHALL FACE AWAY FROM WET WELL.
4. SEE GROUNDING PLAN FOR ELECTRICAL SERVICE GROUNDING REQUIREMENTS (SEE JEA.COM).
5. CONTRACTOR SHALL KEEP COMPANY SIGN AND PHONE NUMBER ON FENCE UNTIL STATION ACCEPTED.
6. TRANSFORMERS SHALL BE LOCATED ON THE SAME SIDE OF PROPERTY AS METER CAN AND ELECTRICAL PANELS.
7. WET WELL LID SHALL UTILIZE STAPLE ASSEMBLY FOR LOCKING THE WET WELL.

SITE SPECIFIC

NO.	BY	DATE	REVISIONS
4.			
3.			
2.			
1.	LLOYD HENRY	9/25/2018	MANUAL TRANSFER SWITCH TABLE

DESIGN ENGINEER:
FLORIDA REGISTRATION NO.

DESIGNER:
DRAWN BY:
DATE:
CHECKED BY:
DATE:

JEA Building Community

JEA STANDARD
CLASS FOUR PUMP STATION
FOR PEAK FLOWS GREATER THAN 2000 GPM
PLAN AND SECTION

NO. SHEETS
SHEET NO.
DRAWING NO.
PROJ. NO.
DATE:
SCALE:

G:\Services\Shared\AutoCAD\henrlo\Water Standards\2021\PUMP STATION SITE SPECIFIC.dwg Current Layout Tab = STANDARD CLASS FOUR PUMP STATION DATA Thu Feb 25, 2021 - 15:14

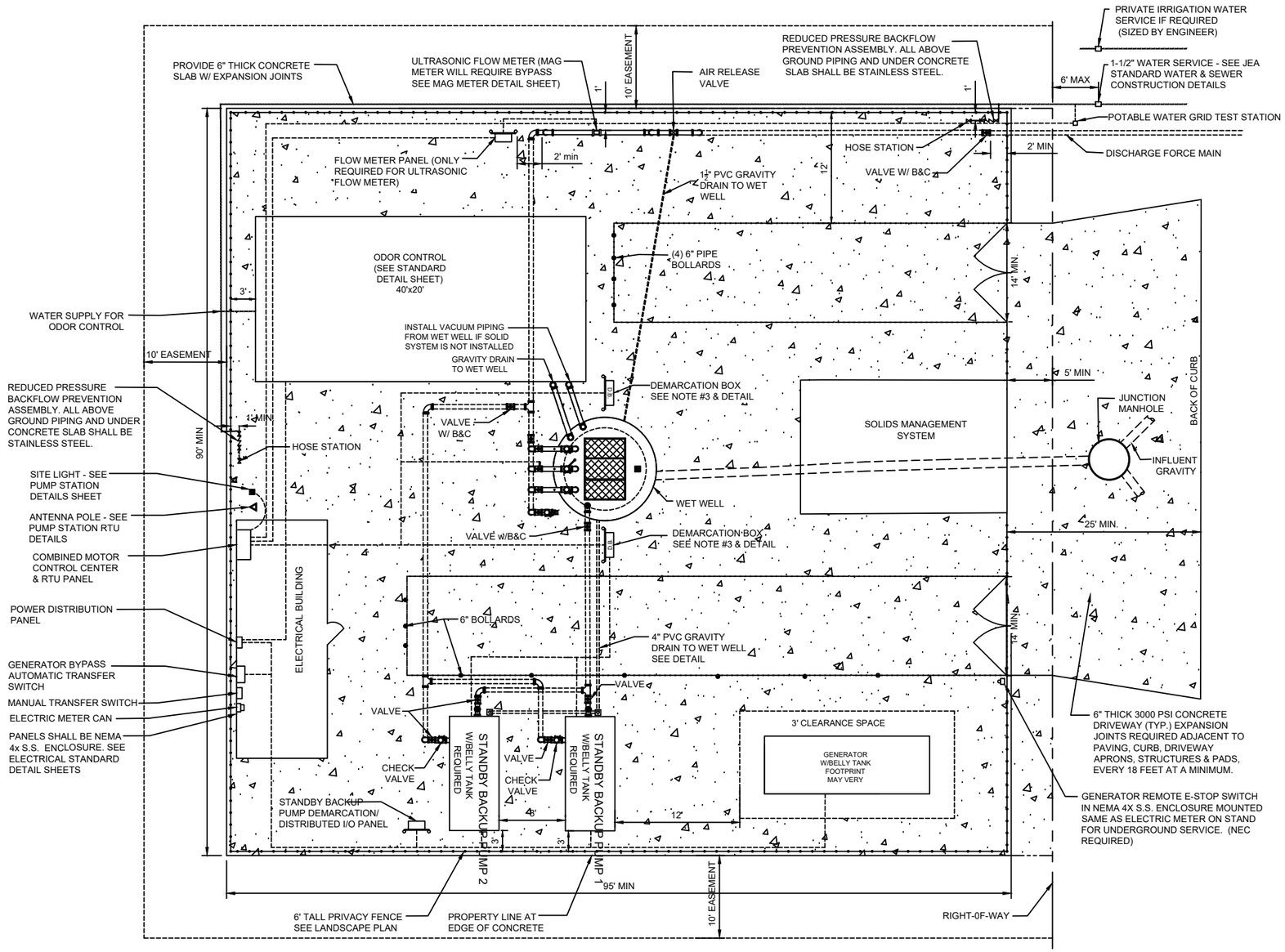

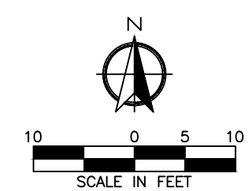

SITE SPECIFIC

NO.	BY	DATE	REVISIONS
4.			
3.			
2.	LLOYD HENRY	9/25/2018	UPDATED ELECTRICAL PANEL
1.			

DESIGN ENGINEER

FLORIDA REGISTRATION NO.

DESIGNED BY:
DRAWN BY:
DATE:
CHECKED BY:
DATE:

JEA Building Community

JEA STANDARD
CLASS FOUR PUMP STATION
FOR PEAK FLOWS GREATER THAN 2000 GPM
PLAN AND SECTION

PROJ. NO.
DATE:
SCALE: 1" = 10'

NO. SHEETS
SHEET NO.
DRAWING NO.

G:\Services\Shared\AutoCAD\henrlo\Water Standards\2021\PUMP STATION SITE SPECIFIC.dwg Current Layout Tab = STANDARD CLASS FOUR PUMP STATION SITE PLAN Thu Feb 25, 2021 - 15:14

Xrefs Attached=

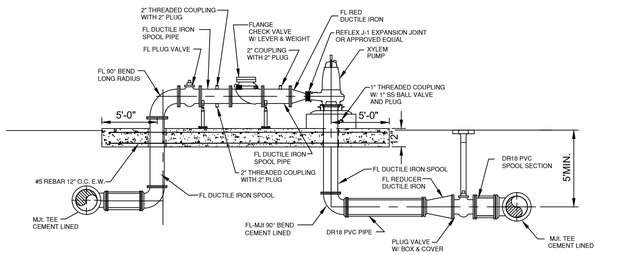

PUMP PIPING DETAIL

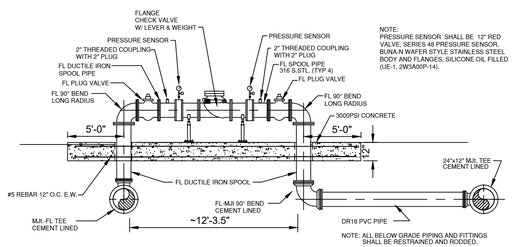

NOTE:
PRESSURE SENSOR SHALL BE 12" RED VALVE, SERIES 48 PRESSURE SENSOR, BUNA-N WAFER STYLE STAINLESS STEEL BODY AND FLANGES, SILICONE OIL FILLED (UE-1, 2WSA00P-14).

PRESSURE CONTROL STATION

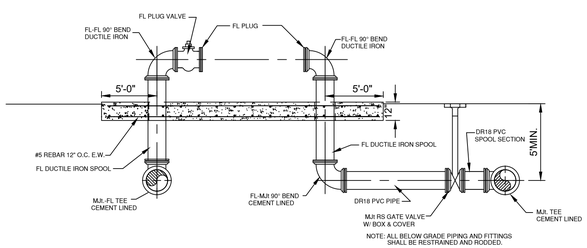

FUTURE PUMP PIPING DETAIL

PUMP STATION INFORMATION
SCHEDULE OF ELEVATIONS

PUMP STATION STREET ADDRESS	TOP ELEVATION	SITE FLOOD ELEVATION	DISCHARGE PIPE DIA.	DISCHARGE F.M. DIA.
	---	---	---	---
	---	---	---	---
	---	---	---	---
	ALL PUMPS			
PUMP MANUFACTURER	EMU	FLYGT	KSB	
MODEL	---	---	---	
IMPELLER	---	---	---	
PUMP DISCHARGE	---	---	---	
MOTOR (RPM)	---	---	---	
HORSEPOWER (HP)	---	---	---	
PHASE/VOLT/AMPS (NOTE #3)	---	---	---	
AIC (SEE NOTE #4)	---	---	---	
DESIGN POINT (GPM) @ TDH (FT)	---	---	---	
RUNOUT POINT (GPM) @ TDH (FT)	---	---	---	
MINIMUM DESIGN SUCTION HEAD (FT)	---	---	---	
LEAD PUMP START HEAD (FT)	---	---	---	
LAG 1 PUMP START HEAD (FT)	---	---	---	
LAG 2 PUMP START HEAD (FT)	---	---	---	
ALL PUMP OFF HEAD (FT)	---	---	---	
EMERGENCY MAIN	---	---	---	
NORMAL SERVICE MAIN	---	---	---	
CB #1 TO PUMP NO. 1	---	---	---	
CB #2 TO PUMP NO. 2	---	---	---	
CONTROL PANEL MCB	---	---	---	
CONTROL PANEL ECB	---	---	---	
MANUAL TRANSFER SWITCH	---	---	---	
STARTER (SIZE & TYPE)	---	---	---	
ELECTRIC SERVICE (TYPE & SIZE)	---	---	---	

PUMP STATION INFORMATION NOTES:

1. IF PUMP MANUFACTURER REQUIRES A GREATER SEPARATION, THAT SEPARATION SHALL BE USED WITH THE ADDITION OF FLANGED FILLERS OR SPOOL PIECES. THE DIFFERENT SEPARATION MUST BE APPROVED BY JEA PRIOR TO CONSTRUCTION AND SHALL BE PROVIDED AT NO ADDITIONAL COST TO JEA.
2. ALL PUMP MOTORS SHALL BE 3 PHASE.
3. MANUAL TRANSFER SWITCH SHALL BE INSTALLED.

MANUAL TRANSFER SWITCH	
JTD364SSMCQC	200 AMP
JTD365SSMCQC	400 AMP

MCC PANEL

THE COMBINED MOTOR CONTROL AND RTV PANEL SHALL BE AS NOTED BELOW. CONTRATOR SHALL SUBMIT APPLICABLE SHOP DRAWING. SEE JEA.COM FOR DETAILS

- ☐ FIXED SPEED PANEL: 240/120 VOLT, 3 PHASE, OPEN DELTA, FULL VOLTAGE MOTOR STARTING, 15 STARTS PER HOUR
- ☐ 1P-3P VFD PANEL: 480/277 VOLT, 3 PHASE, WYE, FULL VOLTAGE MOTOR STARTING, 15 STARTS PER HOUR
- ☐ 3P VFD PANEL: 480/277 VOLT, 3 PHASE, WYE, REDUCED VOLTAGE MOTOR STARTING, 10 STARTS PER HOUR

GENERATOR

MANUFACTURE	
MODEL	
KW	

PONY PUMP

MANUFACTURE		
MODEL		
FLOW GPM @ TDH		
RPM		
NPSHR		
ENGINE H.P.		
SUCTION PIPE SIZE		
DISCHARGE PIPE SIZE		

CONSTRUCTION NOTES:

1. SLOPE CONCRETE TO DRAIN TOWARDS STREET OR OTHER ADJACENT CITY OR JEA OWNED DRAINAGE FACILITY.
2. CONTRACTOR MUST MAINTAIN LANDSCAPING UNTIL FINAL ACCEPTANCE AND SUPPLY ONE (1) YEAR WARRANTY FROM NURSERY SUPPLYING PLANTS FROM DATE OF ACCEPTANCE.
3. SEE GROUNDING PLAN FOR ELECTRICAL SERVICE GROUNDING REQUIREMENTS (SEE JEA.COM).
4. CONTRACTOR SHALL KEEP COMPANY SIGN AND PHONE NUMBER ON FENCE UNTIL STATION ACCEPTED.
5. TRANSFORMERS SHALL BE LOCATED ON THE SAME SIDE OF PROPERTY AS METER CAN AND ELECTRICAL PANELS.

GENERAL NOTES:

1. ALL WORK SHALL COMPLY WITH SPECIFICATIONS, SECTION XXX, "IN-LINE BOOSTER WATER PUMP STATION" JEA WATER AND WASTEWATER STANDARDS MANUAL.
2. PENETRATION SOIL BORING INFORMATION, TAKEN AT STATION LOCATION, SHALL BE SUBMITTED PRIOR TO SHOP DRAWING SUBMITTAL. SOIL BORING SHALL BE A MINIMUM OF 15' DEEP OR UNTIL SUITABLE SOIL IS LOCATED.
3. ALL PIPING SHALL BE FLANGED SCHEDULE 40, DUCTILE IRON. BUTT WELDING OF ANY PIPING IS NOT ALLOWED.
4. ALL FITTINGS (90s, 45s, TEES ETC.) SHALL BE FLANGED CEMENT LINED DUCTILE IRON.
5. ALL NUTS, BOLTS AND ACCESSORIES SHALL BE 316 STAINLESS STEEL AND SHALL BE COATED WITH A "NEVER SEIZE" TYPE COATING.
6. SITE GRADE IS 6" (MIN) BELOW TOP ELEVATION OF PUMP STATION SLAB.
7. IN SILTS, CLAY OR HIGHLY ORGANIC SOILS (FINE-GRAINED SOILS INCLUDING SOIL GROUPS ML, CL, OL, MH, CH, OH AND PT) THE SOILS SHALL BE OVER-EXCAVATED AN ADDITIONAL 12" (AT A MIN.) AND BACKFILL WITH GRANULAR BACKFILL (57 STONE).
8. SEE JEA STANDARD SHEETS (AVAILABLE AT JEA.COM) FOR CONSTRUCTION DETAILS OF SPECIFIC COMPONENTS, INCLUDING ELECTRICAL, LANDSCAPING AND FENCING.
9. SEE REFERENCE FACILITIES STANDARDS DIVISION 26 FOR GENERATOR AND ATS. (HTTPS://WWW.JEA.COM/ENGINGEERING_AND_CONSTRUCTION/FACILITES/)

DESIGN NOTES:

1. ENGINEER SHALL USE THIS PLAN AS A BASIS OF DESIGN FOR SITE SPECIFIC PUMP STATION. THESE NOTES TO BE ERASED ON COMPLETED DRAWING.
2. STATION MINIMUM FLOW RATE: 2001 GPM
4. MINIMUM ELECTRIC SERVICE SIZE: 480 VOLT, 200 AMP., 3 PHASE, 4 WIRE
5. MINIMUM CONCRETE PAD SIZE: 55'x60'
6. IT IS THE ENGINEER'S RESPONSIBILITY TO DESIGN THE SITE TO MEET FUNCTIONALITY AND SITE SPECIFIC CONDITIONS. HOWEVER, THE ENGINEER SHALL MAKE EVERY EFFORT TO CONFORM TO THE STANDARD DRAWING SHOWN HERE.
7. HOW TO DETERMINE TOWER OR POLE FOR SCADA (SEE ALSO SPEC SECTION 433): TO DETERMINE IF A POLE OR TOWER IS REQUIRED A RADIO PATH STUDY MUST FIRST BE CONDUCTED. THE RADIO PATH STUDY MUST BE DONE USING THE SAME TYPE OF RADIO USED IN THE SCADA PANEL AND MUST BE A MINIMUM OF -86DB RSSI. IF THE HEIGHT OF THE MINIMUM -86DB RSSI LEVEL IS LESS THAN OR EQUAL TO 20 FEET THEN A 20 FOOT POLE CAN BE USED. IF THE HEIGHT REQUIREMENTS ARE OVER 20 FEET THEN A TOWER MUST BE USED.

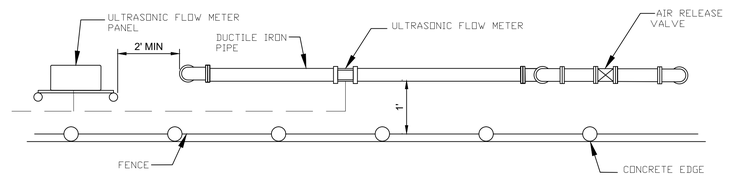

ULTRASONIC FLOW METER

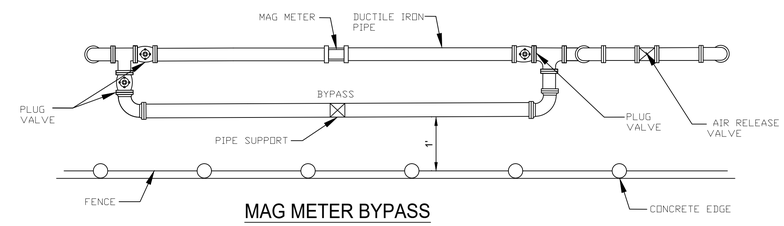

MAG METER BYPASS

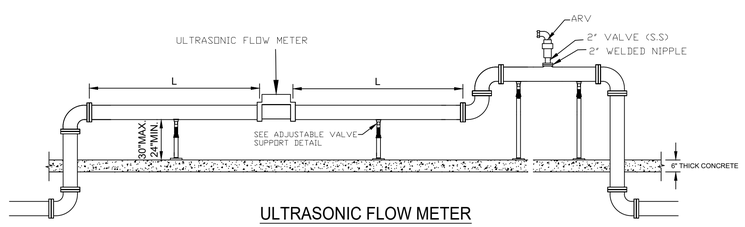

ULTRASONIC FLOW METER

ULTRASONIC FLOW METER DETAIL

NOT TO SCALE

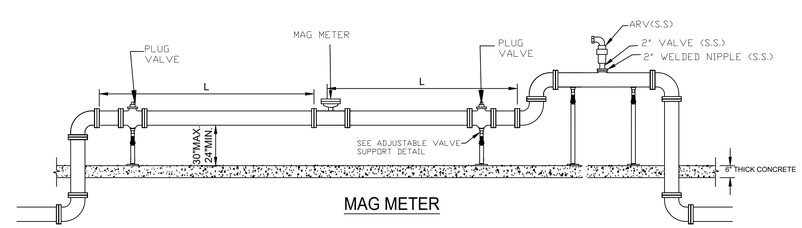

MAG METER

MAG METER DETAIL

NOT TO SCALE

METER NOTES:

1. DIMENSION "L" TO BE DESIGNED BY ENGINEER.

SITE SPECIFIC

NO.	BY	DATE	REVISIONS
6.			
5.			
4.			
3.			
2.			
1.			

DESIGN ENGINEER

FLORIDA REGISTRATION NO.

DESIGNER:
CHECKED BY:
DATE:
CHECKED BY:
DATE:

JEA Building Community

JEA STANDARD
INLINE WATER/RECLAIMED BOOSTER STATION
PLAN AND SECTION

PROJ. NO.
DATE:
SCALE:

NO. SHEETS
SHEET NO.
DRAWING NO.

G:\Services\Shared\AutoCAD\benria\Water Standards\2021\IN-LINE BOOSTER PUMP STATION.dwg Current Layout Tab = IN-LINE BOOSTER PUMP STATION DATA Wed Feb 24, 2021 - 11:33

Xrefs Attached=

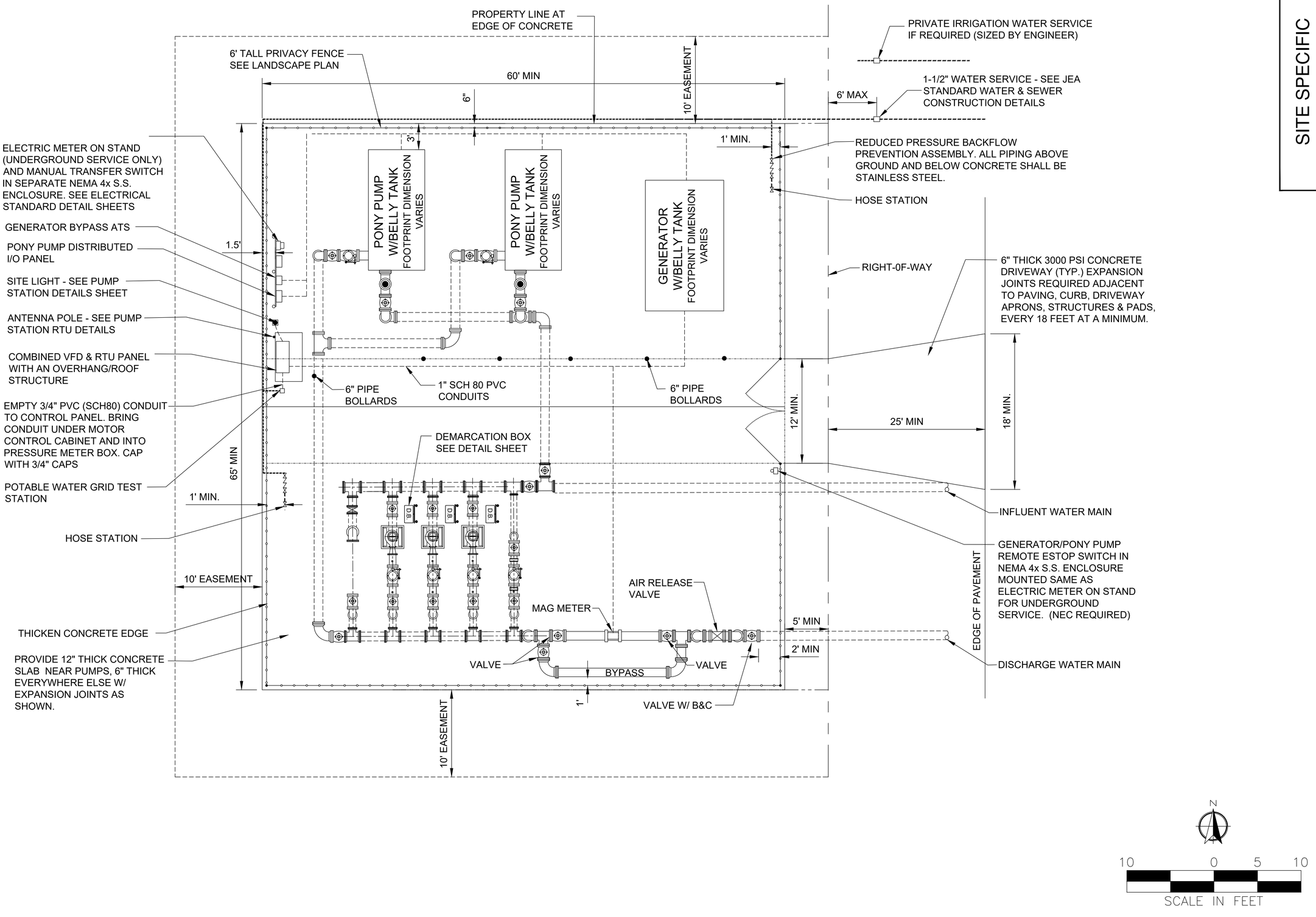

SITE SPECIFIC

NO.	BY	DATE	REVISIONS
6.			
5.			
4.			
3.			
2.			
1.			

DESIGN ENGINEER

FLORIDA REGISTRATION NO.

DESIGNER:
DRAWN BY:
DATE:
CHECKED BY:
DATE:

JEA Building Community

JEA STANDARD
INLINE WASTE/RECLAIMED BOOSTER STATION
PLAN AND SECTION

PROJ. NO.
DATE:
SCALE: 1" = 10'

NO. SHEETS
SHEET NO.
DRAWING NO.

G:\Services\Shared\AutoCAD\henrio\Water Standards\2021\IN-LINE BOOSTER PUMP STATION.dwg Current Layout Tab = IN-LINE BOOSTER PUMP STATION SITE PLAN Wed Feb 24, 2021 - 11:33

Xrefs Attached=

LANDSCAPE NOTES:

1. APPROVED CLUSTER NON-SHADE TREES, (PER CITY OF JACKSONVILLE CODE 656.12.11) TO BE PROVIDED AT JEA PUMPING STATIONS. TREES TO BE PLANTED 12' O.C. MULTI-TRUNK VARIETIES TO BE MIN. 8' HEIGHT AND 3 TRUNK MINIMUM TOTALING 2" CALIPER. SINGLE TRUNK TREES TO BE MIN. 10' HEIGHT AND 2" CALIPER AT TIME OF PLANTING.

COMMON NAME	BOTANICAL NAME
YAPOUN HOLLY	ilex vomitoria
JAPANESE PRIVET	ligustrum japonicum
DAHOON HOLLY	ilex cassine
NELLY STEVENS HOLLY	ilex 'nellie r. stevens'
CRAPE MYRTLE	lagerstroemia indica
DOG WOOD	cornus florida
REDBUD	cercis canadensis\

2. ALL SHRUBS SHALL BE EVERGREEN A ROW OF EVERGREEN SHRUBS SHALL BE A MINIMUM 3' TALL AT TIME OF PLANTING, PLANTED AT 3' ON CENTER.

3. APPROVED SHRUBS INCLUDE ANY OF THE FOLLOWING:

COMMON NAME	BOTANICAL NAME
SWEET VIBURNUM	viburnum odoratissium
DWARF WALTERS VUBURNUM	viburnum obuvatum
SAW PALMETTO	serenoa repens
JAPANESE PRIVETT	ligustrum janonicum
HETZII OR PHTIZERANA	junipurcus chinensis
DWARF BUFORD HOLLY	ilex cornuta 'Buford'
STAR ANISE	illicium spp.

4. ALL LANDSCAPING SHALL BE CONSISTENT WITH FLORIDA FRIENDLY LANDSCAPE STANDARDS. TREES AND SHRUBS SHALL BE SELECTED FROM THE FLORIDA WATERWISE PLANT LIST AND BE APPROPRIATE TO THE LOCAL SOIL AND LIGHT CONDITIONS.

NOTE: JEA NEIGHBORHOOD PUMP STATION WITHIN DUVAL COUNTY

(A.) LANDSCAPE PERFORMANCE STANDARDS (SEC. 656.1223)
THE VISUAL IMPACTS OF THE BELOW GROUND PUMP STATION SITES SHALL BE MITIGATED THROUGH THE USE OF A LANDSCAPING BUFFER OUTSIDE THE SECURITY FENCE. THE BUFFER SHALL BE A MINIMUM OF 5' AT THE STREET FRONTAGE AND A MINIMUM OF 10' ON ALL OTHER SIDES AND SUBJECT TO AND CONSISTING OF THE FOLLOWING:

(1) A ROW OF SHADE TREES, BEGINNING AT THE HALFWAY POINT ALONG EACH SIDE FENCE AND ACROSS THE BACK, WITH NO TREES ALLOWED IN THE FRONT OF THE PUMP STATION, PLANTED A MINIMUM OF 25' ON CENTER. AT THE TIME OF PLANTING, THE TREES SHALL BE MINIMUM OF 10' TALL WITH A 2" CALIPER, AND

(2) A ROW OF EVERGREEN SHRUBS SUCH AS VIBURNUM, LIGUSTRUM, HOLLY OR JUNIPER, OR ANY OTHER EVERGREEN SHRUB PERMITTED BY SECTION 656.1223, A MINIMUM OF 3' TALL AT TIME OF PLANTING. PLANTED AT 3' ON CENTER; AND

(3) A 6' TALL PRIVACY FENCE WITH BLACK VINYL PRIVACY SLATS AND A MINIMUM 14' WIDE PRIVACY GATE.

(4) THE REQUIRED LANDSCAPING SHALL BE PROPERLY MAINTAINED THROUGH AN IRRIGATION SYSTEM WITH RAIN SENSOR.

(B) DEVIATIONS FROM THE STANDARDS IN SUBSECTION (A) MUST BE REVIEWED AND APPROVED BY JEA AND BY THE CITY OF JACKSONVILLE LANDSCAPE ARCHITECT.

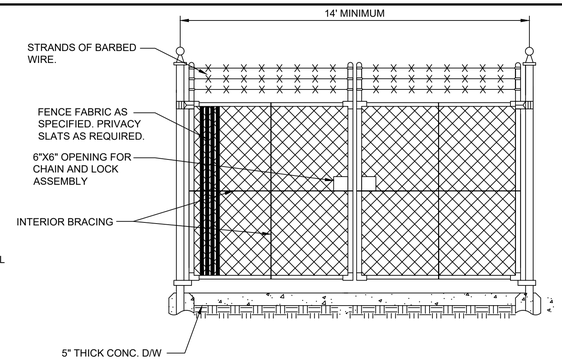

DOUBLE GATE DETAIL

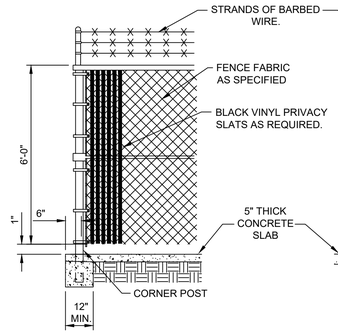

CORNER POST DETAIL

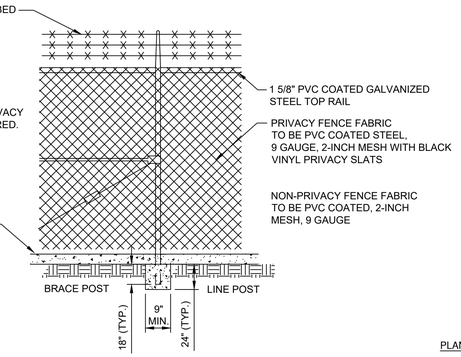

LINE POST DETAIL

FENCE DETAILS

NOT TO SCALE

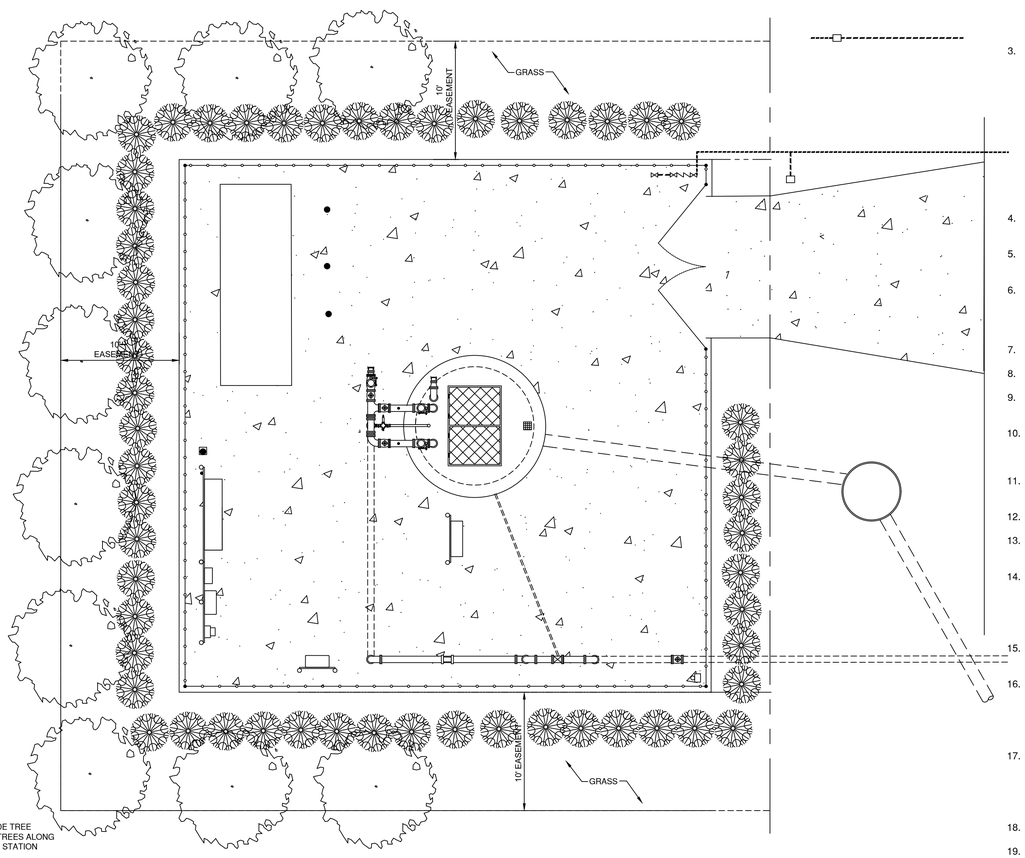

DESIGN NOTES:

1. LANDSCAPE ARCHITECT SHALL USE THIS PLAN AS A BASIS OF DESIGN FOR SITE SPECIFIC PUMP STATION. THESE NOTES TO BE ERASED ON COMPLETED DRAWING.

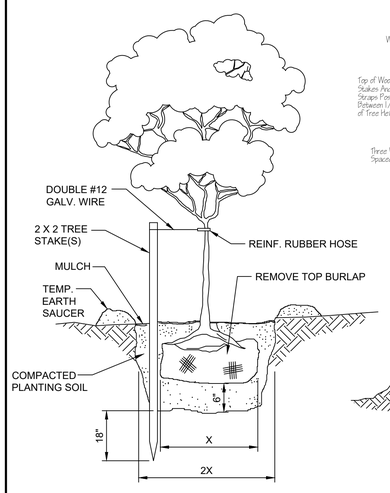

NOTES:

1 STAKE FOR TREES 2" CAL. & LESS
2 STAKES FOR TREES 2 1/2" - 4" CAL.
3 STAKES FOR TREES GREATER THAN 4" CAL.

TREE PLANTING DETAIL

NOT TO SCALE

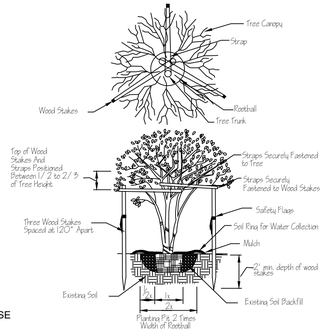

MULTI-TRUNK TREE PLANTING

NOT TO SCALE

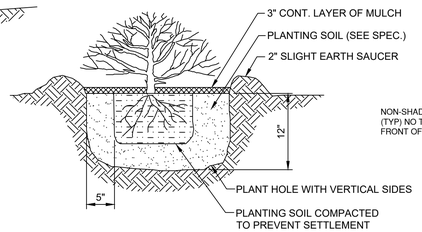

NOTE: REMOVE CONTAINER BEFORE PLANTING.

CONTAINER GROWN SHRUB DETAIL

NOT TO SCALE

STANDARD PUMP STATION SITE

STANDARD LANDSCAPE PLAN

SCALE: 1"=5'

FENCE NOTES

1. FENCE TO BE INSTALLED AS INDICATED ON SITE PLAN.
2. GATE POST TO BE 4" O.D. PVC COATED GALVANIZED STEEL PIPE. CORNER POST TO BE 3" O.D. PVC COATED GALVANIZED STEEL PIPE. LINE POST TO BE 2 1/2" O.D. PVC COATED GALVANIZED STEEL PIPE.
3. ALL FENCE SHALL BE GROUNDED IN ACCORDANCE WITH JEA GROUNDING STANDARDS.
4. BONDING WIRE BETWEEN GATE POST IS NOT REQUIRED WHERE EXISTING ROAD PAVING OR RAILROAD TRACKS WOULD MAKE INSTALLATION IMPRACTICAL.
5. ALL FENCING SHALL BE IN ACCORDANCE WITH JEA SPECIFICATION NO. 492.
6. EMBEDDED CONCRETE PORTION OF FENCE POST SHALL HAVE MASTIC SEAL OR EQUAL COATING TO A MINIMUM OF 6" ABOVE FINISH GRADE.
7. AN INTERIOR DOUBLE 14' WIDE SLIDING/ROLLING GATE IS AN ACCEPTABLE OPTION.
8. FENCE FABRIC SHALL BE KNUCKLED ON TOP AND TWIST ON BOTTOM.
9. ALL FENCING, RAILS, POSTS, BRACKETS, BOLTS ETC. WILL BE PVC COATED
10. CONTACT SECURITYSERVICE@JEA.COM FOR THE LATEST SECURITY FENCE UPDATES.

PLANTING NOTES:

1. JEA IS NOT REQUIRED TO PLANT ANY LANDSCAPING OUTSIDE OF THE PROPERTY LINE. THIS DRAWING REPRESENTS THE MINIMUM AMOUNT OF LANDSCAPING REQUIRED IF LANDSCAPING IS PROVIDED WITHIN THE 10' EASEMENT. HOWEVER, ADDITIONAL PLANTINGS WILL BE ALLOWED IN THE 10' EASEMENT WITH APPROVAL FROM JEA, OR JEA'S REPRESENTATIVE.
2. JEA IS NOT RESPONSIBLE FOR THE MAINTENANCE OF LANDSCAPE MATERIAL OUTSIDE OF THE PROPERTY LINE. IF LANDSCAPING IS REQUIRED BY OTHER GOVERNMENT AGENCIES, THE REQUIRED LANDSCAPING SHALL BE INSTALLED IN THE 10' EASEMENT BY THE DEVELOPER AND MAINTAINED BY THE UNDERLYING LAND OWNER.
3. IT IS NOT THE RESPONSIBILITY OF JEA TO PROVIDE IRRIGATION WITHIN THE 10' EASEMENT. HOWEVER, JEA WILL ALLOW IRRIGATION WITHIN THE EASEMENT WITH THE UNDERSTANDING THAT SUCH IRRIGATION IS MAINTAINED BY THE CONTRACTOR RESPONSIBLE, OR OTHER RESPONSIBLE PARTY, SUCH AS A HOMEOWNERS ASSOCIATION (H.O.A.). IF AN RESPONSIBLE PARTY, OR H.O.A. IS NOT INVOLVED IN THE PUMP STATION SITE, ONLY THEN WILL JEA BE RESPONSIBLE FOR PROVIDING AN IRRIGATION SYSTEM. WHEN IRRIGATION IS REQUIRED BY OTHER GOVERNMENT AGENCIES, THE RESPONSIBLE PARTY WILL PROVIDE AN IRRIGATION SYSTEM WITH A RAIN SENSOR IN ACCORDANCE WITH SPECIFICATIONS SECTION 433. THE TREES SHALL BE IRRIGATED WITH BUBBLERS, THE SHRUBS WITH A MICRO IRRIGATION SYSTEM AND SOD WITH SPRAY HEADS.

   FOR STATION WITHIN DUVAL COUNTY, THE TREES, SHRUBS AND SOD SHALL ALL BE IRRIGATED ON SEPARATED ZONES. SPRAYS, ROTORS OR MICRO IRRIGATION ARE NOT PERMITTED ON SAME ZONE. SEE COJ CODE 656.1212.
4. THE LANDSCAPE CONTRACTOR IS RESPONSIBLE FOR VERIFYING PROJECT SITE CONDITIONS AND ALL QUANTITIES INDICATED ON THESE PLANS, BEFORE PRICING WORK.
5. ALL PLANT MATERIAL SHALL BE FLORIDA GRADE NO. 1 OR BETTER NURSERY GROWN IN ACCORDANCE TO FLORIDA GRADES AND STANDARDS HANDBOOK.
6. PLANTS SHALL BE SOUND, HEALTHY AND VIGOROUS, WELL BRANCHED AND DENSELY FOLIATED WHEN IN LEAF. THEY SHALL BE FREE OF DISEASE, INSECTS, EGGS OR LARVAE AND SHALL HAVE HEALTHY, WELL DEVELOPED ROOT SYSTEMS. THEY SHALL BE FREE FROM PHYSICAL DAMAGE OR ADVERSE CONDITIONS THAT WOULD PREVENT THRIVING GROWTH.
7. ALL PLANTS MUST BE CONTAINER GROWN OR AS INDICATED IN THE PLANT LIST.
8. ALL PLANTS SHALL CONFORM TO THE VARIETIES INDICATED IN THE PLANT LIST.
9. SUBSTITUTION OF PLANT MATERIALS WILL NOT BE PERMITTED UNLESS AUTHORIZED IN WRITING BY JEA, AGENCY LANDSCAPE ARCHITECT OR THE ENGINEER.
10. PLANT MATERIAL LOCATIONS AND BED OUTLINES SHALL BE STAKED OR FLAGGED ON SITE BY THE CONTRACTOR AND SHALL BE ADJUSTED IF REQUIRED TO FIT ACTUAL AS-BUILT CONDITIONS ON SITE AND APPROVED BY JEA OR JEA'S REPRESENTATIVE.
11. ALL PROPOSED TREE PLANTING LOCATIONS SHALL BE STAKED OR FLAGGED BEFORE INSTALLATION BY THE LANDSCAPE CONTRACTOR AND APPROVED BY JEA OR JEA'S REPRESENTATIVE.
12. ALL CONTAINER GROWN ROOTBALLS SHALL BE CAREFULLY SCOURED BEFORE SETTING IN PLANT PITS.
13. ALL BACKFILL AROUND PLANT MATERIAL SHALL BE WORKED FIRMLY, TAMPED AND WATERED IN UNDER AND AROUND THE ROOT BALL TO FILL ALL VOIDS.
14. LANDSCAPE CONTRACTOR SHALL BEAR FINAL RESPONSIBILITY FOR PROPER SURFACE DRAINAGE OF PLANTED AREAS. ANY DISCREPANCY IN THE DRAWINGS, OBSTRUCTION ON THE SITE, OR PRIOR TO WORK DONE BY ANY OTHER PARTY, WHICH THE CONTRACTOR FEELS PRECLUDES ESTABLISHING PROPER DRAINAGE SHALL BE BROUGHT TO THE ATTENTION OF THE PROJECT ENGINEER FOR CORRECTION OR RELIEF OF SAID RESPONSIBILITY.
15. PLANTING BEDS SHALL BE CUT OR EDGED TO FORM A UNIFORM CLEAN LINE BETWEEN BEDS AND LAWN AREAS.
16. AFTER ALL PLANT MATERIAL IN A PLANT BED AREA HAS BEEN INSTALLED AND APPROVED, THE AREAS BETWEEN PLANTS SHALL BE RAKED TO AN EVEN GRADE TO CONFORM TO PRE MULCHING FINISH GRADES. ALL PLANTING BEDS AND PLANT SAUCERS SHALL THEN BE UNIFORMLY COVERED WITH A MINIMUM THREE INCH LAYER OF #2 GRADE OR BETTER CYPRESS MULCH, PINE STRAW OR OTHER JEA ACCEPTABLE MATERIAL.
17. PLANT MATERIAL BACKFILL MIXTURE SHALL BE THOROUGHLY MIXED IN THE FOLLOWING PREPARATIONS:

50% EXISTING CLEAN TOPSOIL	1/3 TOPSOIL
50% SOIL MIX	1/3 PEAT
	1/3 COW MANURE

18. THE LANDSCAPE CONTRACTOR IS RESPONSIBLE FOR ALL FINE GRADING PREPARATION FOR PLANTING.
19. ROUGH GRADES WILL BE ESTABLISHED BY THE OWNERS GENERAL CONTRACTOR AT APPROXIMATELY 3 INCHES BELOW CURBS, SIDEWALKS, HARDSCAPE AMENITIES, MOWING STRIPS AND ABUTMENTS.
20. THE JEA OR JEA'S REPRESENTATIVE SHALL HAVE THE RIGHT TO REJECT ANY AND ALL WORK WHICH IN HIS OPINION DOES NOT MEET WITH THE REQUIREMENTS OF THE SPECIFICATIONS AT ANY STAGE OF THE PROJECT OPERATION.
21. IN GENERAL, THE WORK SHALL PROCEED AS RAPIDLY AS THE SITE BECOMES AVAILABLE. KEEP ALL AREAS OF WORK CLEAN, NEAT, AND ORDERLY AT ALL TIMES.
22. THERE WILL BE SPECIAL CARE TO ALL EXISTING TREES TO BE RETAINED ON SITE TO AVOID CONSTRUCTION DAMAGE.
23. A BACKFLOW PREVENTION SHALL BE INSTALLED AS REQUIRED.
24. AFTER THE LANDSCAPE PLAN IS APPROVED BY THE GOVERNMENTAL AGENCY ANY SUBSEQUENT CHANGES MUST BE RESUBMITTED FOR REVIEW AND APPROVAL.

SITE SPECIFIC

REVISIONS

NO.	BY	DATE	
4.			
3.			
2.	LLOYD HENRY	9/25/2018	UPDATED ELECTRICAL PANEL
1.			

DESIGN ENGINEER

FLORIDA REGISTRATION NO.

DESIGNER:
DRAWN BY:
CHECKED BY:
DATE:

JEA Building Community

JEA STANDARD PUMP STATION LANDSCAPE PLAN

PROJ. NO.
DATE:
SCALE:

NO. SHEETS
SHEET NO.
DRAWING NO.

G:\Services\Shared\AutoCAD\henrio\Water Standards\2021\PUMP STATION SITE SPECIFIC.dwg Current Layout Tab = PUMP STATION LANDSCAPE PLAN Thu Feb 25, 2021 - 15:14

Xrefs Attached=

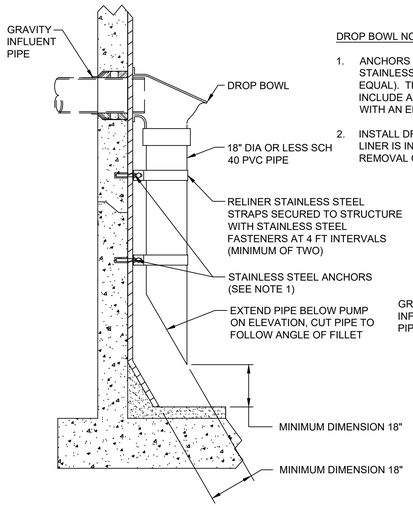

SECTION "B-B"

DROP BOWL NOTES:

1. ANCHORS TO BE CONSTRUCTED OF 316 STAINLESS STEEL "H.A.S." ROD BY HILTI OR EQUAL). THE ANCHORING SYSTEM SHALL INCLUDE ADHESIVE (HILTI H.V.U. OR EQUAL) WITH AN EMBEDMENT DEPTH OF 4 1/4".
2. INSTALL DROP BOWL AFTER THE WET WELL LINER IS INSTALLED. THIS WILL ENSURE EASY REMOVAL OF THE DROP BOWL (IN THE FUTURE).

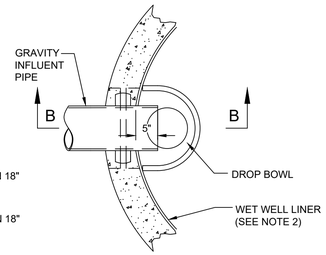

PLAN VIEW

DROP BOWL DETAIL

NOT TO SCALE

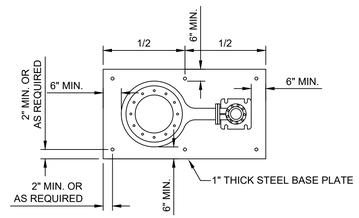

PLAN

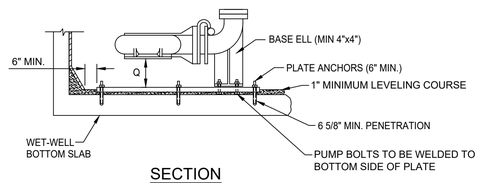

SECTION

BASE PLATE NOTES:

1. PLATE ANCHORS TO BE 3/4" DIAMETER, CONSTRUCTED OF 316 S.S. (H.A.S. ROD) w/ "HVU" ADHESIVE CAPSULE PROVIDING AN EMBEDMENT DEPTH OF 6 5/8". ACCEPTABLE: HILTI OR JEA APPROVED EQUAL.
2. NO EXPANSION ANCHORS ALLOWED.
3. PLATE SIZE: 6" LARGER THAN BASE ELL & PUMP VOLUTE TYP. ALL AROUND.
4. BASE ELL BOLTS AND STUDS TO BE TYPE 316 STAINLESS STEEL. 5. BASE ELL BOLT HEADS SHALL BE WELDED TO UNDER SIDE OF STEEL PLATE.

SUBMERSIBLE PUMP BASE PLATE DETAIL

NOT TO SCALE

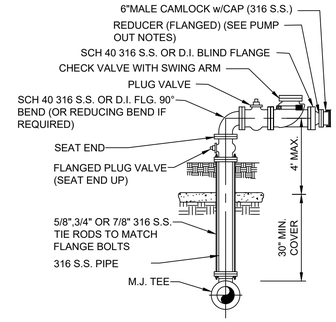

OUTSIDE WETWELL

FOR FLOWS GREATER THAN 1000 GPM OR DISCHARGE PIPING GREATER THAN 8"

FREE STANDING PUMP OUT DETAIL

NOT TO SCALE

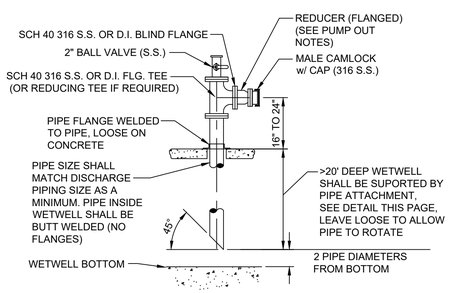

EMERGENCY SUCTION PIPE DETAIL

NOT TO SCALE

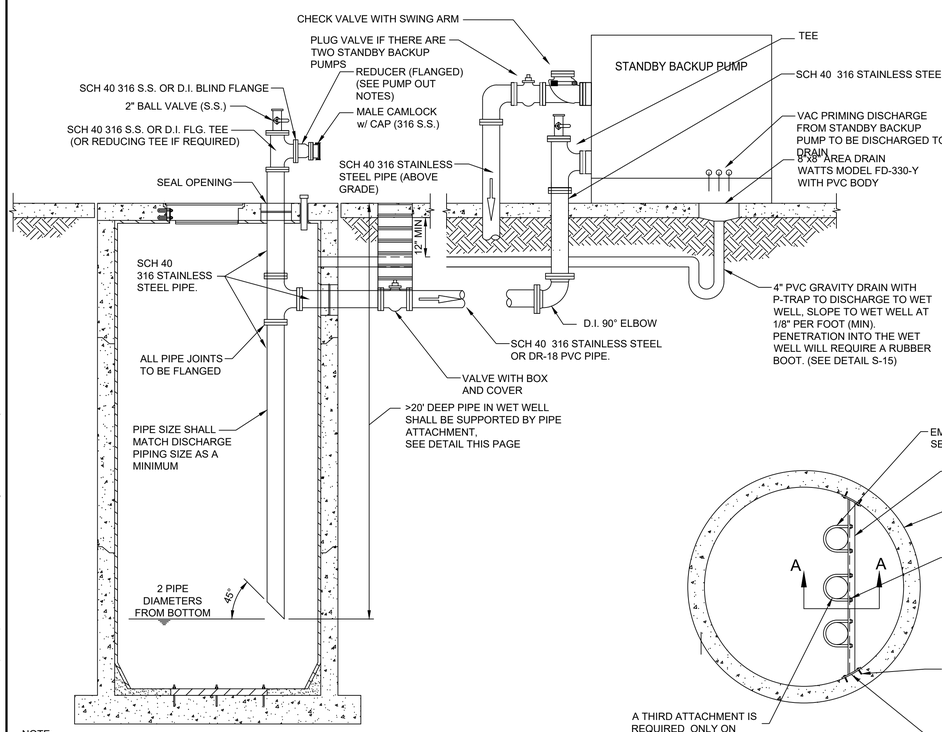

NOTE:
ENGINEER SHALL BE RESPONSIBLE FOR SIZING PIPING FOR NET POSITIVE SUCTION HEAD REQUIRED.

THE ABOVE PIPING IS SHOWN FOR CLARITY, SEE PLAN VIEW FOR PIPE ORIENTATION.

WETWELL CONNECTION TO STANDBY BACKUP PUMP DETAIL

NOT TO SCALE

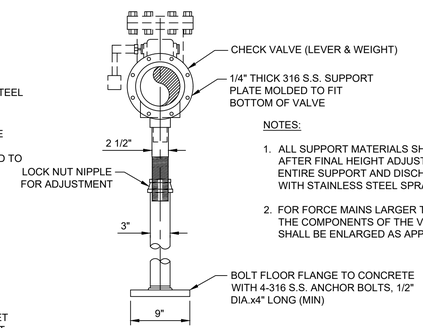

NOTES:

1. ALL SUPPORT MATERIALS SHALL BE 316 S.S. AFTER FINAL HEIGHT ADJUSTMENT, COAT ENTIRE SUPPORT AND DISCHARGE PIPING WITH STAINLESS STEEL SPRAY PAINT.
2. FOR FORCE MAINS LARGER THAN 10" SIZE, THE COMPONENTS OF THE VALVE SUPPORT SHALL BE ENLARGED AS APPROVED BY JEA.

ADJUSTABLE VALVE SUPPORT DETAIL

NOT TO SCALE

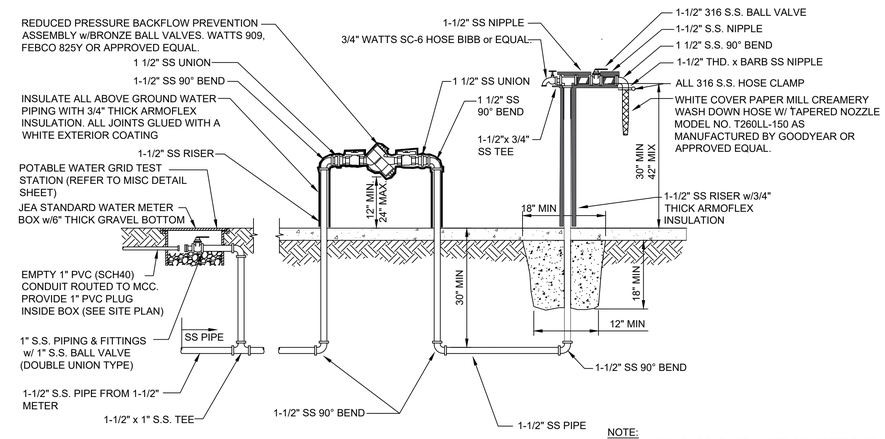

NOTE:
1. ALL PIPING ABOVE AND UNDER CONCRETE SLAB SHALL BE 316 SS SCHEDULE 40.
2. ALL EXTERNAL LONG RUNS OF PIPE SHALL BE SCHEDULE 80 PVC.

1-1/2" HOSE STATION DETAIL

NOT TO SCALE

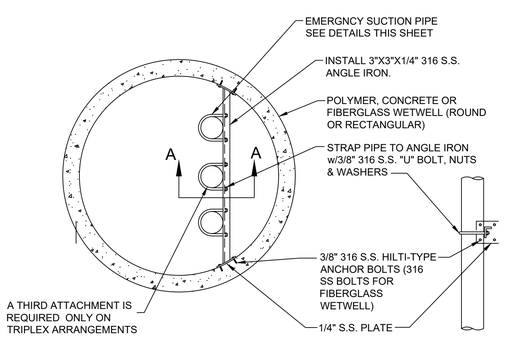

PLAN SECTION 'A-A'

PIPE ATTACHMENT TO WALL DETAIL

REQUIRED FOR ALL PUMPING STATIONS WITH WETWELL 20' DEEP AND GREATER (INSTALLED PRIOR TO SPECIALTY LINER)

NOT TO SCALE

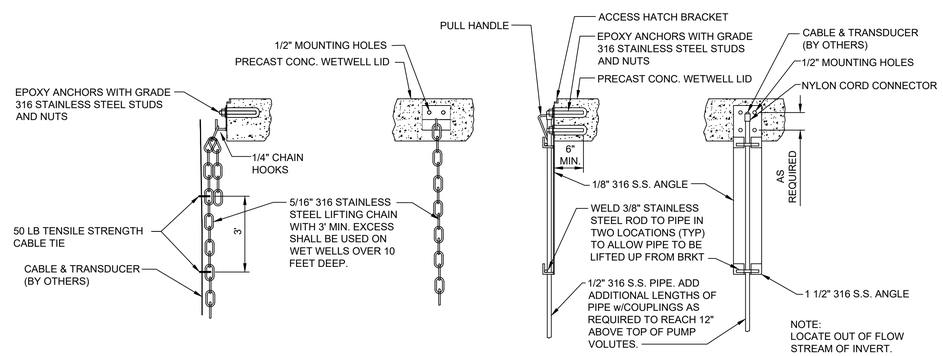

NOTE:
LOCATE OUT OF FLOW STREAM OF INVERT.

SECTION VIEW FRONT VIEW SECTION VIEW FRONT VIEW

TRANSDUCER BRACKET DETAIL

NOT TO SCALE

STANDARD

NO.	BY	DATE	REVISIONS
4.			
3.			
2.			
1.	LLOYD HENRY	9/25/2018	UPDATED TO SUBMERSIBLE PUMP BASE

DESIGN ENGINEER:
FLORIDA REGISTRATION NO.

DESIGNER:
DRAWN BY:
DATE:
CHECKED BY:
DATE:

JEA Building Community

JEA STANDARD
PUMP STATION CONSTRUCTION DETAILS
MISCELLANEOUS DETAILS

PROJ. NO.
DATE:
SCALE:
NO. SHEETS
SHEET NO.
DRAWING NO.

G:\Services\Shared\AutoCAD\henrlo\Water Standards\2021\PUMP STATION DETAILS.dwg Current Layout Tab = MISCELLANEOUS DETAILS 1 Wed Feb 24, 2021 – 11:18

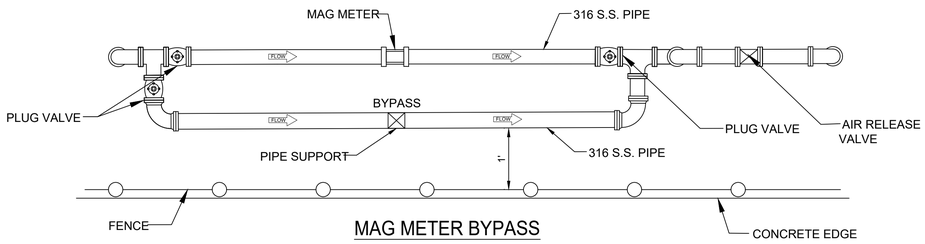

MAG METER BYPASS

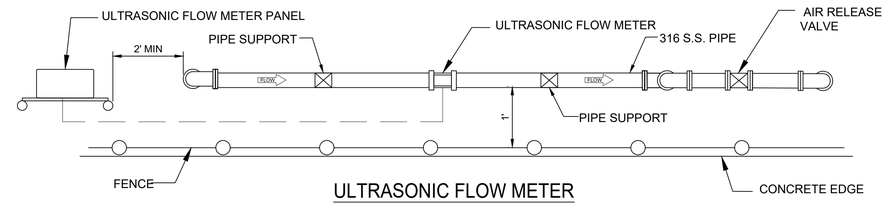

ULTRASONIC FLOW METER

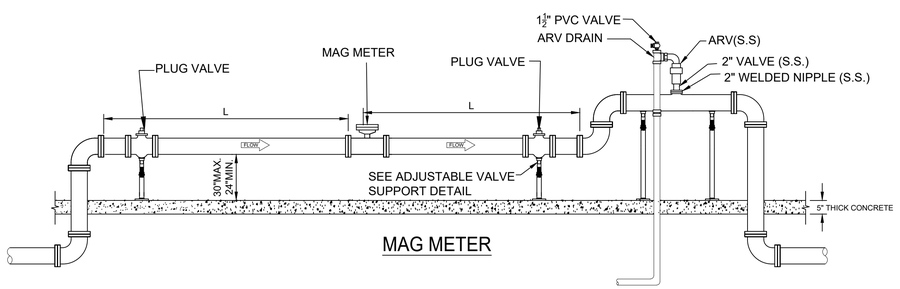

MAG METER

MAG METER DETAIL

NOT TO SCALE

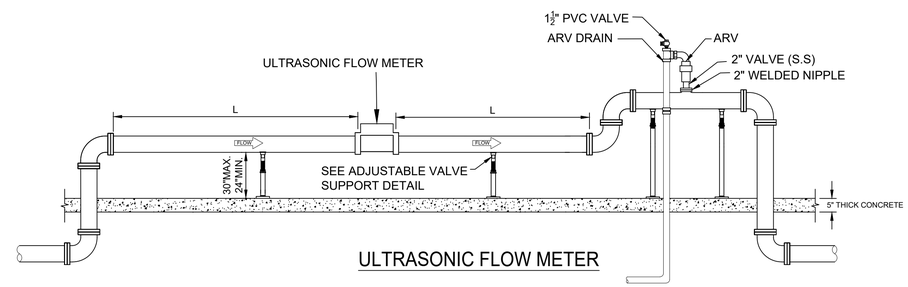

ULTRASONIC FLOW METER

ULTRASONIC FLOW METER DETAIL

NOT TO SCALE

METER NOTES:

1. DIMENSION "L" TO BE DESIGNED BY ENGINEER.

NOTES:

1. CONTRACTOR TO PROVIDE AND INSTALL TRANSDUCER AND GAUGE PER JEA SPECIFICATIONS.

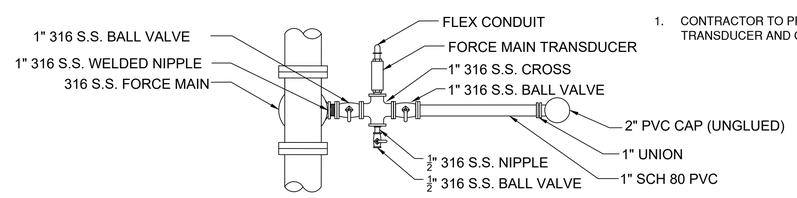

TOP VIEW

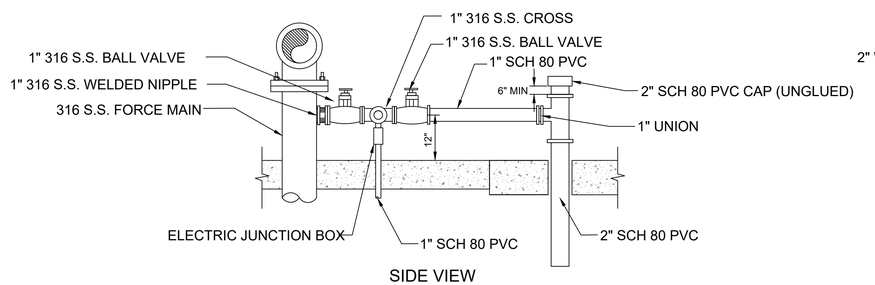

SIDE VIEW

FORCE MAIN TRANSDUCER DETAIL

NOT TO SCALE

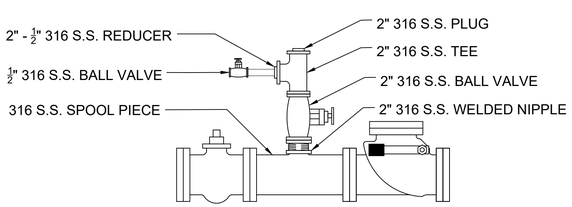

FUTURE DISCHARGE ARV DETAIL

NOT TO SCALE

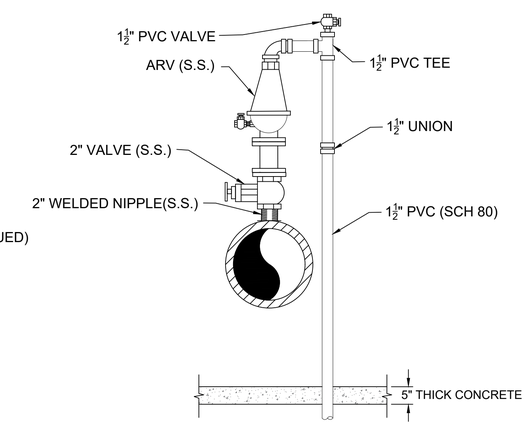

ARV DRAIN DETAIL

NOT TO SCALE

STANDARD

NO.	BY	DATE	REVISIONS
4.			
3.	LLOYD HENRY	11/20/2019	ADDED FORCE MAIN TRANSDUCER DETAIL
2.	LLOYD HENRY	9/25/2018	UPDATED DESIGN CONTROL DETAIL
1.			

DESIGN ENGINEER:

FLORIDA REGISTRATION NO.

DESIGNER:
DRAWN BY:
DATE:
CHECKED BY:
DATE:

JEA Building Community.com

JEA STANDARD
PUMP STATION CONSTRUCTION DETAILS
MISCELLANEOUS DETAILS 2

PROJ. NO.
DATE:
SCALE:

NO. SHEETS
SHEET NO.
DRAWING NO.

G:\Services\Shared\AutoCAD\henrla\Water Standards\2021\PUMP STATION DETAILS.dwg Current Layout Tab = MISCELLANEOUS DETAILS 2 Wed Feb 24, 2021 – 11:18

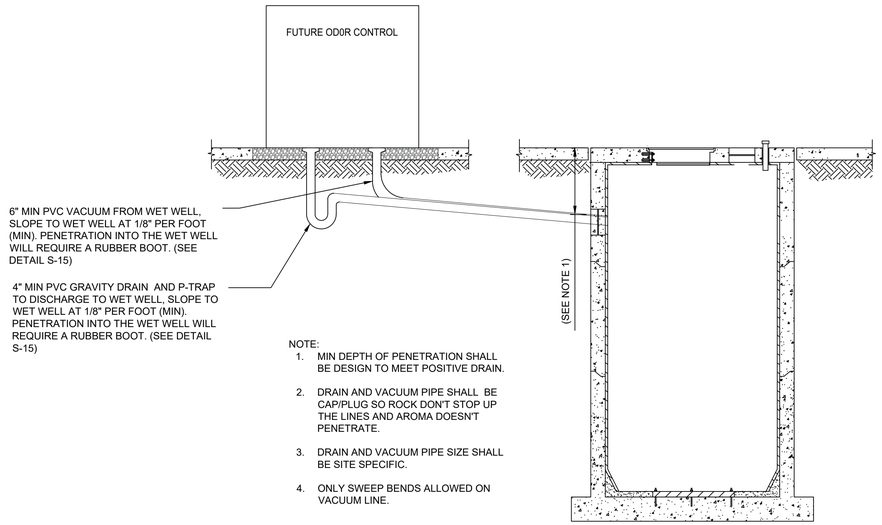

NOTE:
1. MIN DEPTH OF PENETRATION SHALL BE DESIGN TO MEET POSITIVE DRAIN.
2. DRAIN AND VACUUM PIPE SHALL BE CAP/PLUG SO ROCK DON'T STOP UP THE LINES AND AROMA DOESN'T PENETRATE.
3. DRAIN AND VACUUM PIPE SIZE SHALL BE SITE SPECIFIC.
4. ONLY SWEEP BENDS ALLOWED ON VACUUM LINE.

ODOR CONTROL DRAIN AND VACUUM CONNECTION TO WET WELL DETAIL

NOT TO SCALE

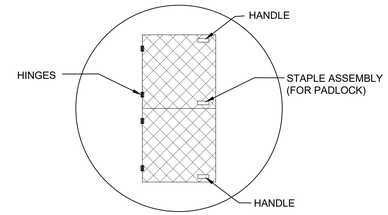

WET WELL HATCH DETAIL

NOT TO SCALE

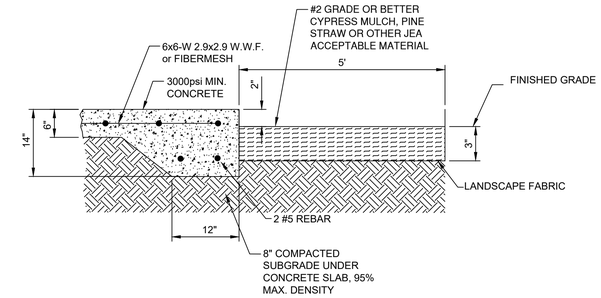

CONCRETE SLAB AND GROUND COVER DETAIL

NOT TO SCALE

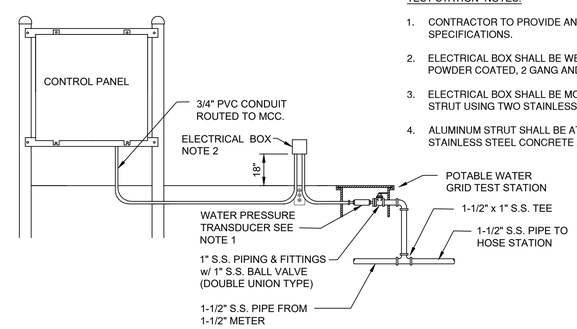

TEST STATION NOTES:

1. CONTRACTOR TO PROVIDE AND INSTALL TRANSDUCER PER JEA SPECIFICATIONS.
2. ELECTRICAL BOX SHALL BE WEATHERPROOF, ALUMINUM, GRAY POWDER COATED, 2 GANG AND 3/4" OUTLETS.
3. ELECTRICAL BOX SHALL BE MOUNT ON A 1/2" x 3" WIDE ALUMINUM STRUT USING TWO STAINLESS STEEL SCREWS.
4. ALUMINUM STRUT SHALL BE ATTACHED TO SLAB USING 3 RED HEAD STAINLESS STEEL CONCRETE ANCHORS.

WATER TEST STATION DETAIL

NOT TO SCALE

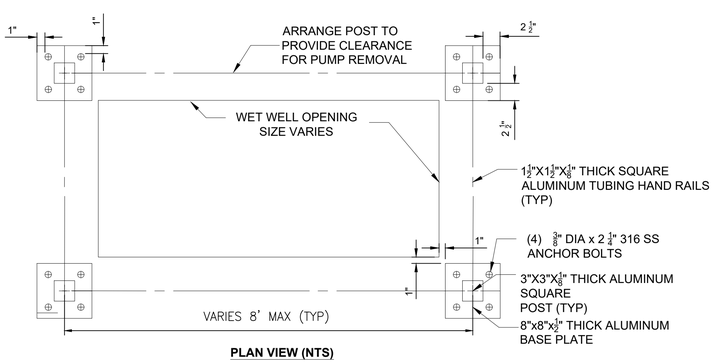

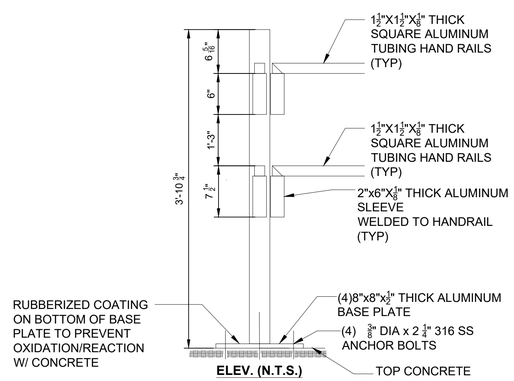

PUMP STATION HANDRAIL DETAIL

NOT TO SCALE

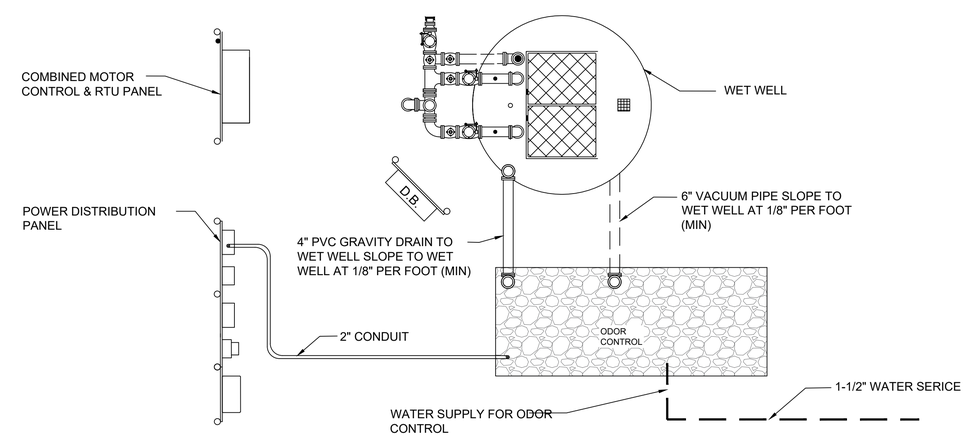

ODOR CONTROL STUB OUT DETAIL

NOT TO SCALE

STANDARD

NO.	BY	DATE	REVISIONS
4.			
3.	LLOYD HENRY	9/10/2019	UPDATED WATER TEST STATION DETAIL
2.	LLOYD HENRY	9/25/2018	UPDATED ODOR CONTROL DETAIL
1.			

DESIGN ENGINEER:
FLORIDA REGISTRATION NO.

DESIGNER:
DRAWN BY:
DATE:
CHECKED BY:
DATE:

JEA Building Community

JEA STANDARD
PUMP STATION CONSTRUCTION DETAILS
MISCELLANEOUS DETAILS 3

NO. SHEETS
SHEET NO.
PROJ. NO.
DATE:
SCALE:
DRAWING NO.

G:\Services\Shared\AutoCAD\henrio\Water Standards\2021\PUMP STATION DETAILS.dwg Current Layout Tab = MISCELLANEOUS DETAILS 3 Wed Feb 24, 2021 - 11:18

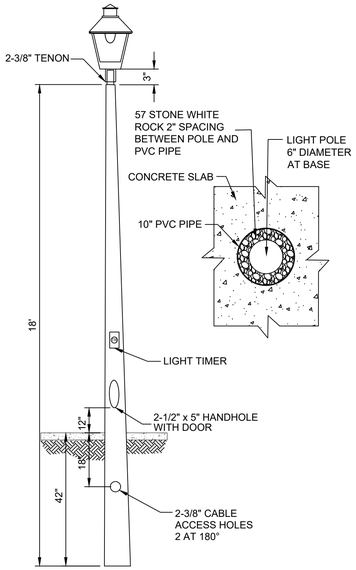

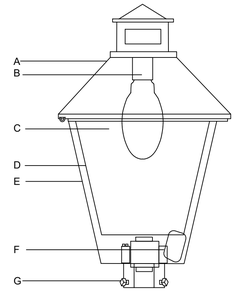

A. TOP
HINGED DIE-CAST ALUMINUM TOP WITH CUPOLA COVER.

B. SOCKET
VERTICAL: BASE UP STANDARD ON TYPE I,

C. LAMP
70W HIGH PRESSURE SODIUM

D. REFACTOR
INJECTION MOLDED ACRYLIC REFRACTOR PANELS.

E. HOUSING
DIE-CAST ALUMINUM BADE HOUSING.
STANDARD COLOR: BLACK

F. STARTER
PLUG-IN STARTER

G. MOUNTING
SELF-ALIGNING POLE TOP FITTER FOR 2-3/8 O.D. TENONS. SQUARE HEADED 1-1/4" POLYMER COATED MOUNTING BOLTS.

H. TERMINAL BLOCK
TERMINAL BLOCK STANDARD.

I. POLE
FIBERGLASS DIRECT BURIED
A: BLACK

SPECIFICATION:

COOPER LIGHTING
LEXINGTON LXF
CATALOG No.: LWF70SH233U0115
70W HPS REC-HPF 120V PCR, TOOL-LESS

70W
HIGH PRESSURE SODIUM
METAL HALIDE MERCURY

SITE LIGHT DETAIL

NOT TO SCALE

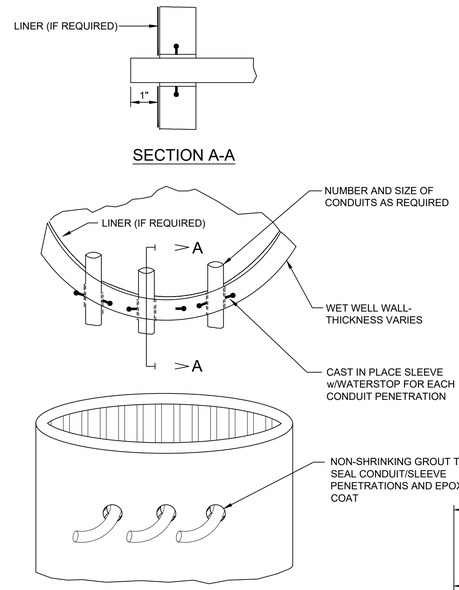

NOTES:

1. CORE BORING FOR CONDUITS SHALL BE ALLOWED FOR EXISTING WET WELLS ONLY.
2. EXTEND CONDUITS AND ARV DRAIN 1" INSIDE WET WELL.
3. FOR POLYMER WET WELLS USE POLYMER GROUT TO SEAL AROUND CONDUIT PENETRATIONS.
4. FOR CONCRETE WET WET WELLS USE NON-SHRINKING GROUT TO SEAL AROUND CONDUIT PENETRATIONS.
   MANUFACTURER: QUIKRETE MODEL: 1585
5. IF INTERIOR OF THE CONCRETE WET WELL IS DAMAGED, REPAIR USING A SPECIAL LINING PRODUCT: SEE SPEC. SECTION #446.
6. SEAL CONDUIT AT THE WET WELL USING DUCT SEAL.
   MANUFACTURER: BLACKBURN
   MODEL: DX5, S-1# DUCT SEAL
7. LOCATE CONDUIT SLEEVE SO AS NOT TO INTERFERE WITH WET WELL MAINTENANCE AND OPERATION.
8. MINIMUM FOUR 1-INCH AND THREE 2-1/2-INCH CONDUITS.
9. ODDER CONTROL VACUUM PIPING WILL REQUIRE A RUBBER BOOT (SEE DETAIL S-15)

WET WELL PENETRATION DETAIL

NOT TO SCALE

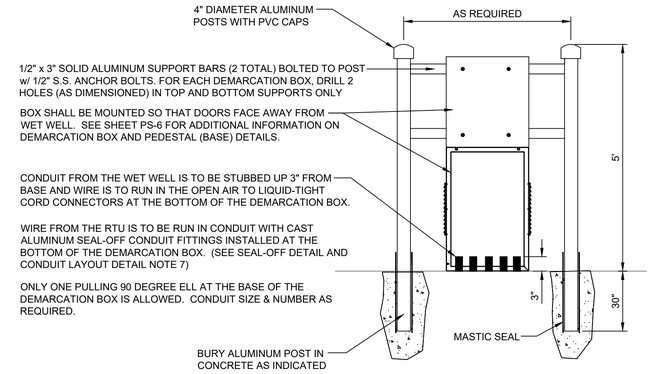

DEMARCATION BOX DETAILS

NOT TO SCALE

MOTOR TERMINAL BLOCKS SHALL BE WAGO "POWER CAGE CLAMP" SERIES. CONDUCTOR AMPACITY, VOLTAGE, AND WIRE SIZE SHALL DETERMINE FINAL SELECTION.

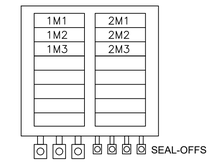

SEAL-OFF DETAIL

SEE DEMARCATION BOX DRAWINGS FOR ADDITIONAL INFORMATION

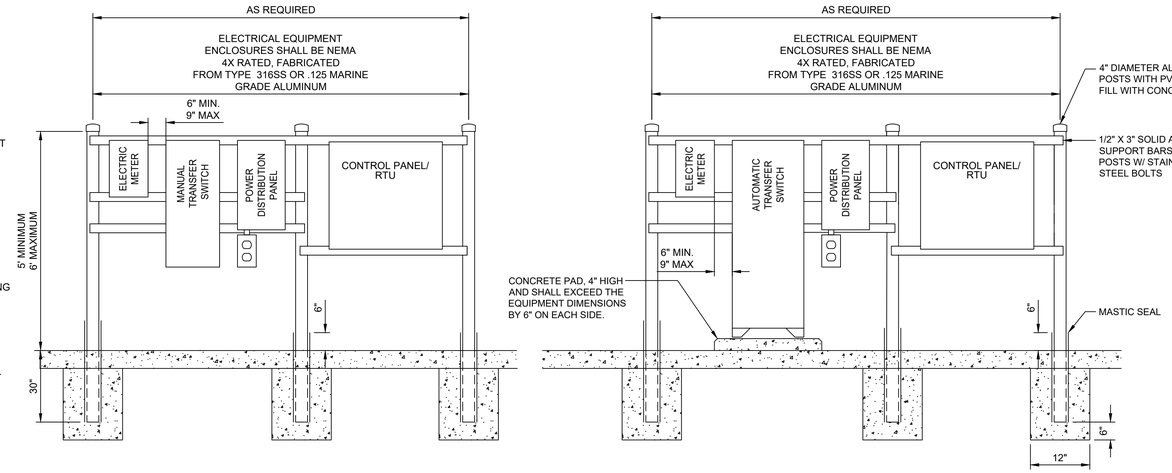

PUMP STATIONS WITHOUT STANDBY GENERATOR

PUMP STATIONS WITH STANDBY GENERATOR

ELECTRICAL EQUIPMENT RACK DETAIL

NOT TO SCALE

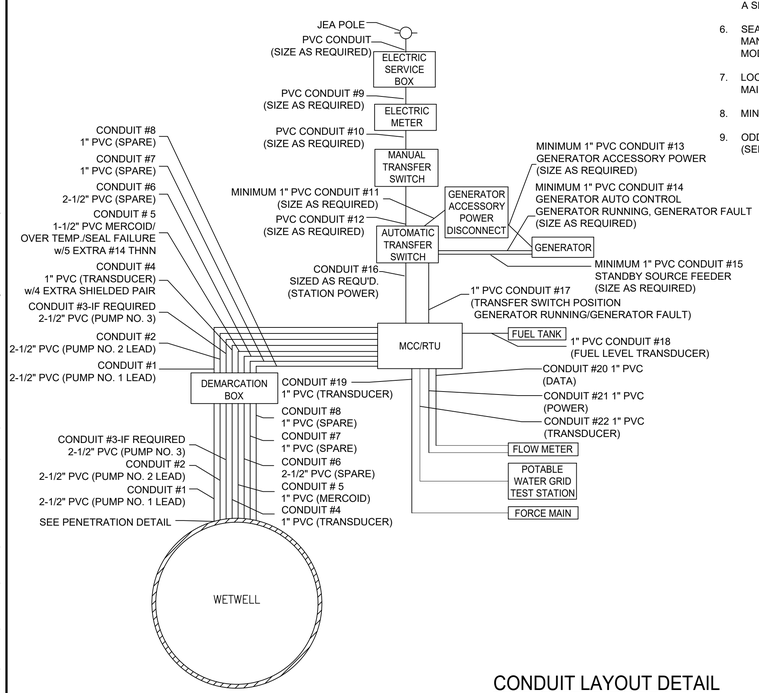

CONDUIT LAYOUT DETAIL

NOT TO SCALE

NOTES:

1. MINIMUM SCHEDULE 80 PVC CONDUIT SIZE AS SHOWN. CONDUIT SIZE MUST MEET NEC REQUIREMENTS FOR CONDUIT FILL.
2. ALL CONDUITS THAT RUN STRAIGHT FROM THE MCC TO THE DEMARCATION BOX SHALL BE ALLOWED TWO 90° BENDS. EACH CONDUIT SHALL ENTER THE BOTTOM OF THE CONTROL PANEL SEPARATELY.
3. INSTALL SPARE WIRE FROM DEMARCATION BOX TO MCC AND LABEL AS PER SPECS.
   A) 5-#14 THHN
   B) 4-SHIELDED PAIR
4. SPARE CONDUIT BETWEEN WETWELL AND DEMARCATION BOX TO BE THREADED, CAPPED AND TERMINATED INSIDE BOX.
5. SPARE CONDUIT BETWEEN DEMARCATION BOX AND MCC. CAP OFF BELOW DEMARCATION BOX AND TERMINATE INSIDE THE MCC CABINET
6. CONDUIT BETWEEN DEMARCATION BOX AND WETWELL SHALL HAVE ONLY ONE 90° BEND.
7. INSTALL MALLEABLE SEAL OFF'S AT DEMARCATION BOX END FOR CONDUITS BETWEEN DEMARCATION BOX AND MCC.
8. INSTALL END BELLS AND LARGE CABLE HOOKS ON PUMP LEAD CONDUITS.

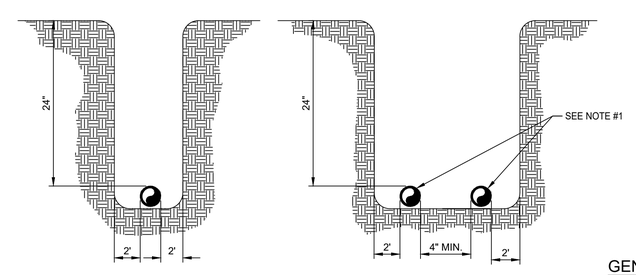

SINGLE CONDUIT RUN

MULTIPLE CONDUIT RUN

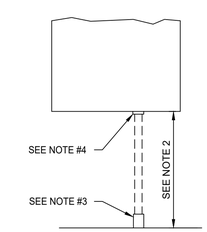

NOTES:

1. UNDERGROUND CONDUIT SCHEDULE 80 PVC.
   MANUFACTURER: CARLON
2. CONDUIT ABOVE GROUND TO CABINETS SCHEDULE 80 PVC NEMA TC-2 SUNLIGHT RESISTANT.
   MANUFACTURER: CARLON
3. UNDERGROUND PVC COUPLED TO ABOVE GROUND PVC WITH A PVC COUPLING. MANUFACTURER: CARLON
4. ABOVE GROUND PVC CONNECTED TO RTU AND MCC USING A PVC CONNECTOR. MANUFACTURER: CARLON

GENERAL ABOVE GROUND CONDUIT RUN SHOWING COUPLING AND CONNECTOR

ABOVE AND UNDERGROUND ELECTRICAL RACEWAY DETAILS

NOT TO SCALE

STANDARD

NO.	BY	DATE	REVISIONS
4.			
3.			
2.	LLOYD HENRY	9/25/2018	UPDATED ELECTRICAL EQUIPMENT RACK
1.			

DESIGN ENGINEER:
FLORIDA REGISTRATION NO.

DESIGNER:
DRAWN BY:
DATE:
CHECKED BY:
DATE:

JEA Building Community

JEA STANDARD
PUMP STATION ELECTRIC DETAILS
ELECTRIC DETAILS

PROJ. NO.
DATE:
SCALE:
NO. SHEETS
SHEET NO.
DRAWING NO.

G:\Services\Shared\AutoCAD\henrlo\Water Standards\2021\PUMP STATION DETAILS.dwg Current Layout Tab = ELECTRIC DETAILS Wed Feb 24, 2021 - 11:18

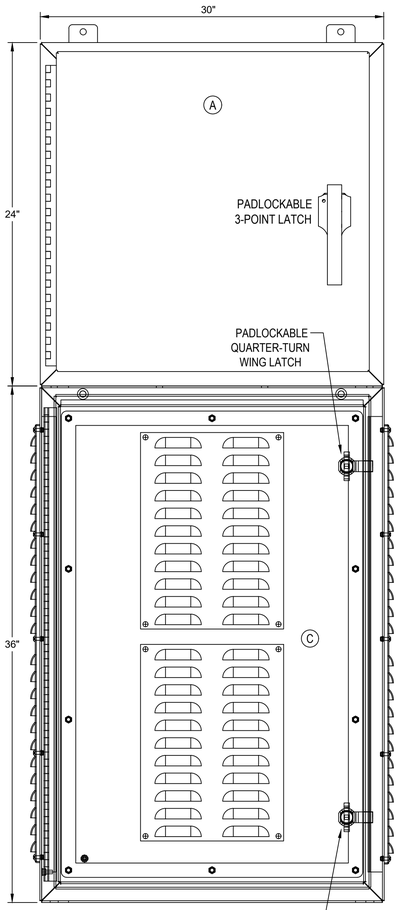

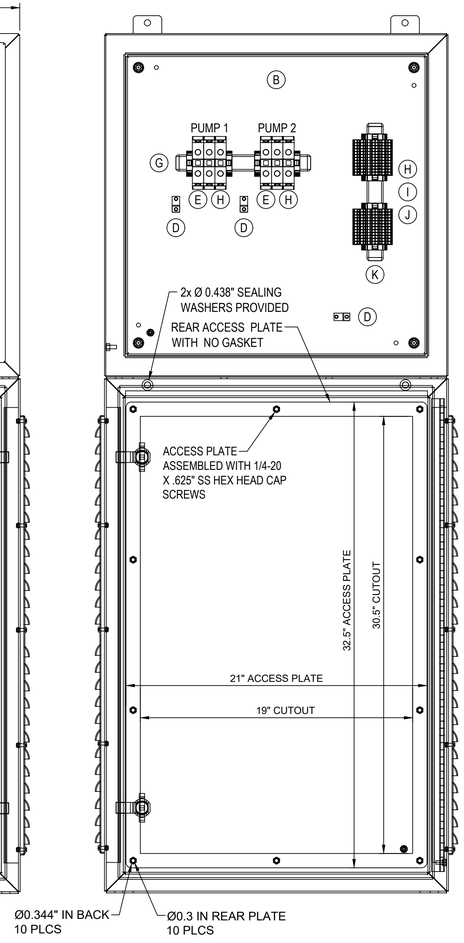

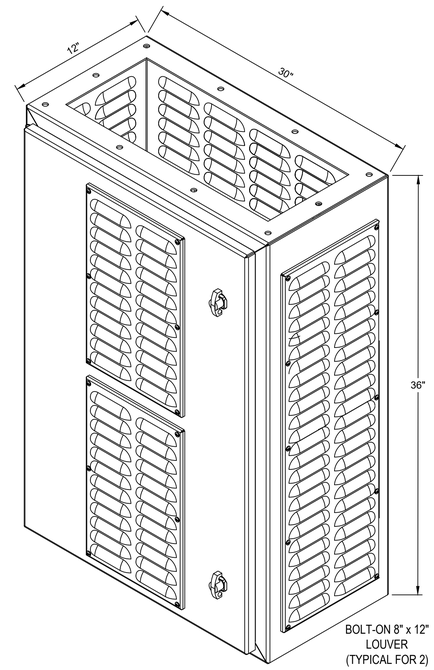

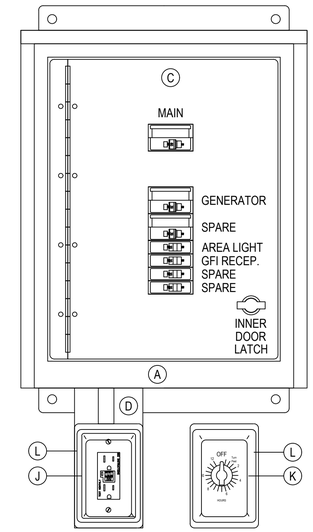

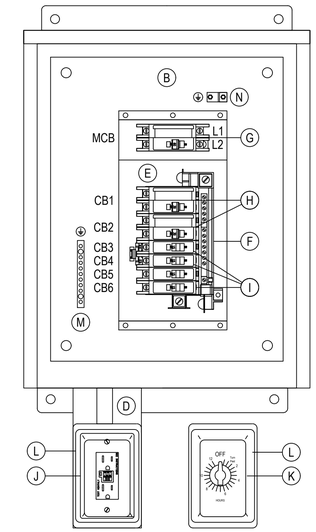

POWER DISTRIBUTION PANEL (TYPICAL 240VAC - 1 PHASE SHOWN)

ENCLOSURE:
SPLRHCSS6-20168 (20"H x 16"W x 8"D) NEMA 12/3R RATED, FABRICATED FROM TYPE 316 STAINLESS STEEL. OUTER DOOR IS FITTED WITH A PADLOCKABLE 3-POINT LATCH.

BACK PANEL:
SPP-2016 (17"H x 13"W) FABRICATED FROM 14ga. CARBON STEEL WITH WHITE POLYESTER POWDER COAT FINISH.

HINGED INNER DOOR:
FABRICATED FROM .125 ALUMINUM WITH CONTINUOUS HINGE AND TWIST LATCH.

240 VAC DISTRIBUTION PANEL NOTES:

1. POWER DISTRIBUTION PANEL 120/240V 1 PHASE WITH 60A 2-POLE MAIN BREAKER.
2. PANEL OUTER DOOR SHALL BE HINGED AND PADLOCKABLE.
3. ALL LIVE PARTS SHALL BE ENCLOSED FOR PERSONNEL SAFETY AND EQUIPMENT PROTECTION.
4. GROUNDING TERMINAL SHALL BE PROVIDED IN THE ENCLOSURE
5. THE ENCLOSURE SHALL BE NEMA 3R RATED.
6. IF ENCLOSURE IS FABRICATED WITHIN AN AUTHORIZED PANEL SHOP, .125 MARINE GRADE ALUMINUM SHALL BE USED.
7. IF ENCLOSURE IS PURCHASED FROM AN AUTHORIZED DISTRIBUTOR, TYPE 316 STAINLESS STEEL MAY ALSO BE USED.
8. THE LOAD CENTER MOUNTING BASE PLATE SHALL BE UL LISTED, RATED AT 240 VOLTS / 200 AMPS MINIMUM.
9. THE LOAD CENTER BUS MATERIAL SHALL BE ALUMINUM OR TIN-PLATED ALUMINUM.
10. THE LOAD CENTER SHALL HAVE EIGHT SPACES.
11. BREAKERS MAY BE SNAP-IN; JEA DETERMINED LOCATIONS WITH HIGH-VIBRATION REQUIRE BOLT-IN TYPE BREAKERS.
12. PANEL SHALL CONTAIN TWO 2-POLE 30-AMP BREAKERS: (1) GENERATOR USE, (1) SPARE.
13. PANEL SHALL CONTAIN FOUR 1-POLE 15-AMP BREAKERS: (1) LIGHT, (1) GFI, (2) SPARES.
14. PANEL SHALL HAVE A 20-AMP OUTDOOR RATED GFCI RECEPTACLE AND SPRING-WOUND COMMERCIAL RATED LIGHT TIMER.
15. GFCI AND TIMER SHALL BE MOUNTED ACCORDING TO N.E.C. STANDARDS.
16. GFCI AND TIMER SHALL BE RIGIDLY MOUNTED ON THE EXTERIOR OF THE PANEL USING TYPE 316 SS OR ALUMINUM BRACKETS.

480 VAC DISTRIBUTION PANEL NOTES:

1. STANDARD PANEL: 3 KVA TRANSFORMER 480V-120/480V WITH 2-POLE 20-AMP MAIN BREAKER.
2. PANEL WITH ODOR CONTROL: 5 KVA TRANSFORMER 480V-120/480V WITH 2-POLE 30-AMP MAIN BREAKER.
3. PANEL WITH GENERATOR: 10 KVA TRANSFORMER 480V-120/480V WITH 2-POLE 60-AMP MAIN BREAKER.
4. PANEL OUTER DOOR SHALL BE HINGED AND PADLOCKABLE.
5. ALL LIVE PARTS SHALL BE ENCLOSED FOR PERSONNEL SAFETY AND EQUIPMENT PROTECTION.
6. GROUNDING TERMINAL SHALL BE PROVIDED IN THE ENCLOSURE
7. THE ENCLOSURE SHALL BE NEMA 3R RATED.
8. IF ENCLOSURE IS FABRICATED WITHIN AN AUTHORIZED PANEL SHOP, .125 MARINE GRADE ALUMINUM SHALL BE USED.
9. IF ENCLOSURE IS PURCHASED FROM AN AUTHORIZED DISTRIBUTOR, TYPE 316 STAINLESS STEEL MAY ALSO BE USED.
10. THE LOAD CENTER MOUNTING BASE PLATE SHALL BE UL LISTED, RATED AT 240 VOLTS / 200 AMPS MINIMUM.
11. THE LOAD CENTER BUS MATERIAL SHALL BE ALUMINUM OR TIN-PLATED ALUMINUM.
12. THE LOAD CENTER SHALL HAVE EIGHT SPACES.
13. BREAKERS MAY BE SNAP-IN; JEA DETERMINED LOCATIONS WITH HIGH-VIBRATION REQUIRE BOLT-IN TYPE BREAKERS.
14. PANEL SHALL CONTAIN TWO 2-POLE 30-AMP BREAKERS: (1) GENERATOR USE, (1) SPARE.
15. PANEL SHALL CONTAIN FOUR 1-POLE 15-AMP BREAKERS: (1) LIGHT, (1) GFI, (2) SPARES.
16. PANEL SHALL HAVE A 20-AMP OUTDOOR RATED GFCI RECEPTACLE AND SPRING-WOUND COMMERCIAL RATED LIGHT TIMER.
17. GFCI AND TIMER SHALL BE MOUNTED ACCORDING TO N.E.C. STANDARDS.
18. GFCI AND TIMER SHALL BE RIGIDLY MOUNTED ON THE EXTERIOR OF THE PANEL USING TYPE 316 SS OR ALUMINUM BRACKETS.

DEMARCATION BOX and PEDESTAL

ENCLOSURE:
SPN4AL-243012 (24"H x 30"W x 12"D) NEMA 4X RATED, FABRICATED FROM .125 MARINE GRADE ALUMINUM. OUTER DOOR IS FITTED WITH A PADLOCKABLE 3-POINT LATCH.

BACK PANEL:
SPP-3030 (27"H x 27"W) FABRICATED FROM 12ga. CARBON STEEL WITH WHITE POLYESTER POWDER COAT FINISH.

PEDESTAL:
SPN12AL-363012-215 (36"H x 30"W x 12"D) NEMA 12 RATED, FABRICATED FROM .125 MARINE GRADE ALUMINUM. OUTER DOOR IS FITTED WITH TWO PADLOCKABLE QUARTER-TURN LATCHES.

NOTE 1: SELECT APPROPRIATELY SIZED TERMINAL BLOCK BASED ON MOTOR LOAD
NOTE 2: INSERTING MULTIPLE CABLES INTO A SINGLE TERMINAL IS PROHIBITED. USE A SECOND BLOCK AND THE ASSOCIATED ADJACENT JUMPER
NOTE 3: USE PRINTED GUIDE ON TERMINAL BLOCKS TO MEASURE CORRECT CABLE STRIP LENGTH
NOTE 4: ENGINEER APPROVED EQUAL COMPONENT MAY BE SUBSTITUTED

BILLS of MATERIAL

DEMARCATION BOX and PEDESTAL

		QTY	MANUFACTURER	PART NUMBER	DESCRIPTION
	A	1	SCHAEFER	SPN4AL-243012	ENCLOSURE, NEMA 4X ALUMINUM, 3-PT.
	B	1	SCHAEFER	SPP-2430	MOUNTING PANEL, 12ga. PAINTED STEEL
	C	1	SCHAEFER	SPN12AL-363012-215	PEDESTAL, NEMA 12 ALUMINUM, LOUVERS
	D	3	PANDUIT	LAMA2-14-QY	GROUND LUG, DUAL-RATED, #2-14 AWG
3,2,1	E	6	WAGO	285-135	TERMINAL BLOCK, 1 POLE, 115A
			WAGO	285-150	TERMINAL BLOCK, 1 POLE, 150A
			WAGO	285-195	TERMINAL BLOCK, 1 POLE, 200A
			WAGO	285-1185	TERMINAL BLOCK, 1 POLE, 310A
2	F	-	WAGO	285-435	ADJACENT JUMPER, 115A
			WAGO	285-450	ADJACENT JUMPER, 150A
			WAGO	285-495	ADJACENT JUMPER, 200A
			WAGO	285-1171	ADJACENT JUMPER, 310A
	G	1	WAGO	210-118	2M CARRIER RAIL, STEEL, UNSLOTTED
	H	8	WAGO	249-197	TERMINAL END STOP, GRAY
	I	24	WAGO	2002-1401	CONTROL TERMINALS, 24A, 800V, SPRING
	J	2	WAGO	2002-1492	TERMINAL END / PARTITION PLATE, ORANGE
	K	1	WAGO	210-112	2M DIN RAIL, GALVANIZED, SLOTTED

POWER DISTRIBUTION PANEL (AS SHOWN)

		QTY	MANUFACTURER	PART NUMBER	DESCRIPTION
	A	1	SCHAEFER	SPLRHCSS6-20168	ENCLOSURE, NEMA 12/3R, 316 SS, 3-PT.
	B	1	SCHAEFER	SPP-2016	MOUNTING PANEL, 14ga. PAINTED STEEL
	C	1	OEM	-	HINGED INNER DOOR, .125 ALUMINUM
	D	1	OEM	GFI MOUNT	TO RIGIDLY MOUNT EXTERNAL DEVICES
	E	1	OEM	BREAKER MOUNT	TO RAISE CBs FLUSH WITH INNER DOOR
	F	1	SQUARE D	QON816L100	100 AMP LOAD CENTER INTERIOR ASSY.
	G	1	SQUARE D	QOU260	MCB MAIN CIRCUIT BREAKER, 2 POLE, 60A
	H	2	SQUARE D	QO230	CB1-CB2 GEN. BREAKER, 2 POLE, 30A
	I	4	SQUARE D	QO115	CB3-CB6 CONTROL BREAKER, 1 POLE, 15A
	J	1	HUBBELL	GF20WLA	DUPLEX GFCI RECEPTACLE, 20A
4	K	1	INTERMATIC	FF30MC	SPRING-WOUND TIMER, 30 min. NO HOLD
	L	1	INTERMATIC	WP1030C	SINGLE GANG WEATHER-PROOF COVER, CLEAR
	M	1	SQUARE D	PK9GTA	EQUIPMENT GROUND BAR, 9-POINT
	N	1	PANDUIT	LAMA2-14-QY	GROUND LUG, DUAL-RATED, #2-14 AWG

POWER DISTRIBUTION PANEL SCHEMATIC:

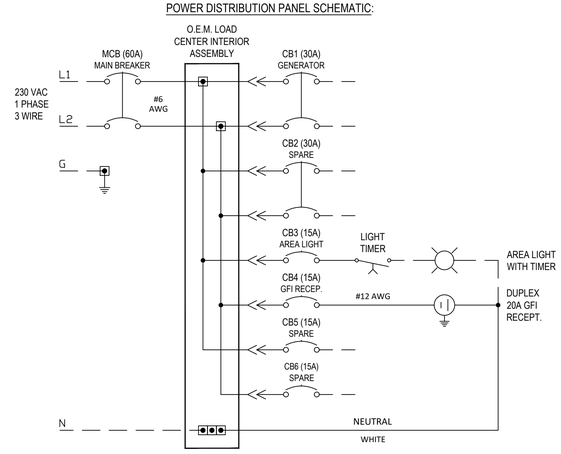

STANDARD

NO.	BY	DATE	REVISIONS
4.			
3.			
2.			
1.	LLOYD HENRY	9/25/2018	TITLE ADDED

DESIGN ENGINEER:
FLORIDA REGISTRATION NO.

DESIGNER:
DRAWN BY:
DATE:
CHECKED BY:
DATE:

JEA Building Community

JEA STANDARD
PUMP STATION ELECTRIC DETAILS
DEMARCATION BOX & POWER DISTRIBUTION PANEL

NO. SHEETS
PROJ. NO.
SHEET NO.
DATE:
DRAWING NO.
SCALE:

G:\Services\Shared\AutoCAD\henrla\Water Standards\2021\PUMP STATION DETAILS.dwg Current Layout Tab = DEMARCATION BOX & POWER DISTRIBUTION PANEL Wed Feb 24, 2021 - 11:18

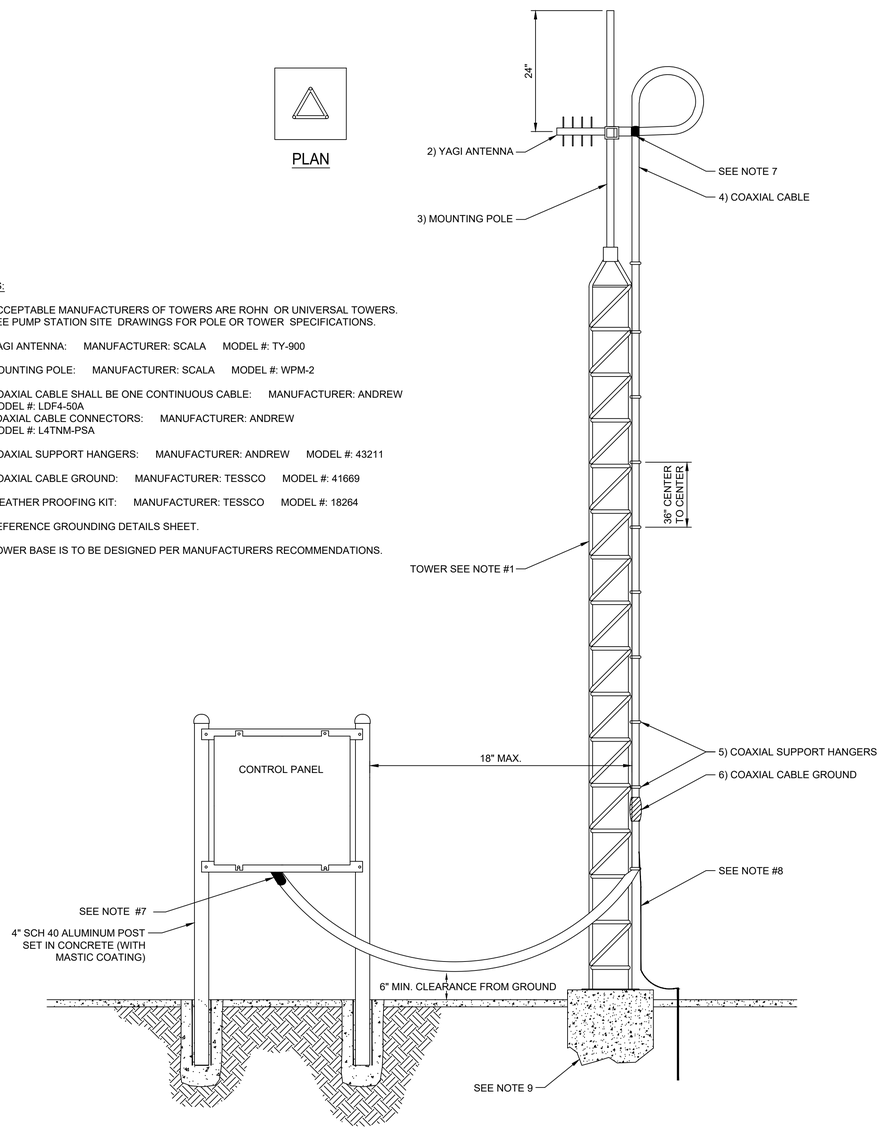

NOTES:

1. ACCEPTABLE MANUFACTURERS OF TOWERS ARE ROHN OR UNIVERSAL TOWERS. SEE PUMP STATION SITE DRAWINGS FOR POLE OR TOWER SPECIFICATIONS.
2. YAGI ANTENNA: MANUFACTURER: SCALA MODEL #: TY-900
3. MOUNTING POLE: MANUFACTURER: SCALA MODEL #: WPM-2
4. COAXIAL CABLE SHALL BE ONE CONTINUOUS CABLE: MANUFACTURER: ANDREW MODEL #: LDF4-50A
   COAXIAL CABLE CONNECTORS: MANUFACTURER: ANDREW MODEL #: L4TNM-PSA
5. COAXIAL SUPPORT HANGERS: MANUFACTURER: ANDREW MODEL #: 43211
6. COAXIAL CABLE GROUND: MANUFACTURER: TESSCO MODEL #: 41669
7. WEATHER PROOFING KIT: MANUFACTURER: TESSCO MODEL #: 18264
8. REFERENCE GROUNDING DETAILS SHEET.
9. TOWER BASE IS TO BE DESIGNED PER MANUFACTURERS RECOMMENDATIONS.

ALTERNATE POLE SCADA INSTALLATION DETAIL

FOR POLE HEIGHTS 20 FEET AND ABOVE
NOT TO SCALE

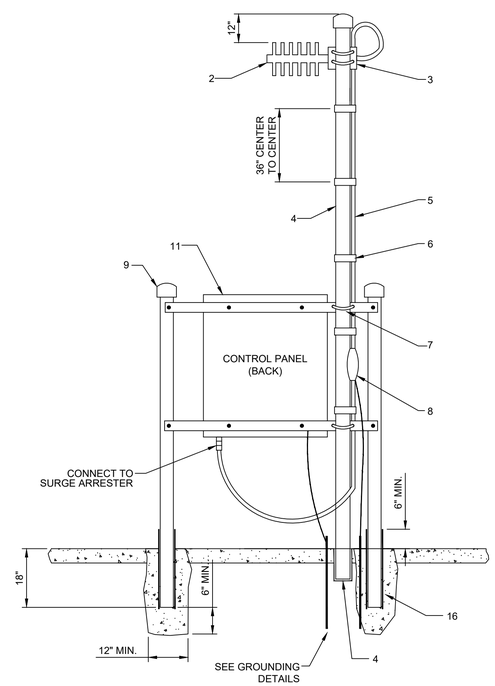

SCADA INSTALLATION DETAIL

FOR POLE HEIGHTS LESS THAN 20 FEET
NOT TO SCALE

NOTES:

1. SEE PUMP STATION SITE DRAWINGS FOR POLE OR TOWER SPECIFICATIONS.
2. YAGI ANTENNA, COMES W/ MOUNTING HARDWARE(MAST SHALL BE SLEEVED THRU CONCRETE TO ALLOW ROTATION (DO NOT USE WOOD POLE MOUNT)
   MANUFACTURE: SCALA
   MODEL NUMBER: TY-900
3. COAX CONNECTOR
   MANUFACTURE: WIRELESS SOLUTIONS
   MODEL NUMBER: NM50V-1/2
4. 2 $\frac{1}{2}$" O.D. SCD. 40 ALUMINUM 20' POLE.
   POLE SHALL BE SLEEVED THROUGH CONCRETE TO ALLOW FOR ROTATION
5. COAXIAL CABLE SHALL BE ONE CONTINUOUS CABLE
   MANUFACTURER: ANDREW
   MODEL #: LDF4-50A
6. STAINLESS STEEL STRAPS 3' O/C
   MANUFACTURE: WIRELESS SOLUTIONS
   MODEL NUMBER: RM-A300
7. 316 STAINLESS STEEL U-BOLTS
   MANUFACTURE: ANY DOMESTIC BRAND
   MODEL NUMBER: N/A
8. COAXIAL CABLE GROUND
   MANUFACTURER: TESSCO
   MODEL #: 41669
9. 4" PVC CAPS
10. 4" DIA. ALUMINUM POST
11. 1/2"X3" SOLID ALUMINUM SUPPORT BARS (2 TOTAL) BOLTED TO POST W/ 5/8" S.S. ANCHOR BOLTS. DRILL 2 HOLES (AS DIMENSIONED ON DETAIL) IN TOP & BOTTOM SUPPORTS ONLY
12. BURY ALUMINUM POST IN CONCRETE AS SHOWN ON DRAWING.
13. INSTALL RTU MOUNT SO THAT WHEN CABINET IS ATTACHED DOOR IS FACING NORTH UNLESS DOOR HAS SUN SHIELD. IN ALL INSTANCES JEA PREFERS THE DOOR TO FACE NORTH IF POSSIBLE.
14. CABINET SHALL HAVE CLEARANCE TO OPEN DOOR COMPLETELY.
15. SCADA SYSTEM WOOD POLE ALTERNATE DETAIL TO BE USED ONLY WHEN ADDITIONAL ANTENNA HEIGHT IS REQUIRED, AND APPROVED.
16. MASTIC SEAL ALL POSTS WHICH ARE EMBEDDED IN CONCRETE.
17. ALL MATERIALS MUST MEET OR EXCEED JEA SPECIFICATIONS

STANDARD

NO.	BY	DATE	REVISIONS
4.			
3.			
2.			
1.	LLOYD HENRY	9/25/2018	ALTERNATE POLE SCADA INSTALLATION DETAIL

DESIGN ENGINEER:
FLORIDA REGISTRATION NO.

DESIGNER:
DRAWN BY:
DATE:
CHECKED BY:
DATE:

JEA Building Community

JEA STANDARD
PUMP STATION ELECTRIC DETAILS
SCADA INSTALLATION

PROJ. NO.
DATE:
SCALE:
NO. SHEETS
SHEET NO.
DRAWING NO.

G:\Services\Shared\AutoCAD\henrlo\Water Standards\2021\PUMP STATION DETAILS.dwg Current Layout Tab = SCADA INSTALLATION Wed Feb 24, 2021 – 11:18

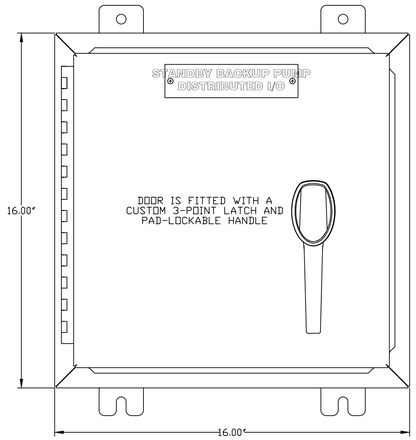

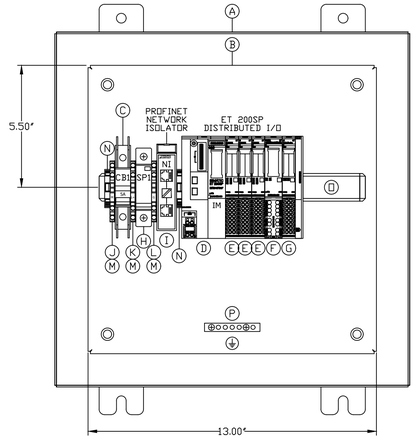

GENERATOR DISTRIBUTED I/O PANEL - BILL of MATERIAL					
ITEM	TAG	PART No.	DESCRIPTION	MANUFACTURER	QTY.
A		SPN4AL-16166-W	ENCLOSURE, NEMA 4X, ALUMINUM, WHITE PAINTED FINISH, 3-PT. LATCH	SCHAEFER	1
B		SPP-1616	BACK PANEL, 12ga. CARBON STEEL, WHITE ENAMEL FINISH	SCHAEFER	1
C	CB1	2907562	CIRCUIT BREAKER, UL489 BRANCH RATED, C-CURVE, 1-POLE, 5A	PHOENIX CONTACT	1
D	IM	6AG1 155-6AA01-7BN0	INTERFACE MODULE, SIPLUS ET200SP IM155-6PN STANDARD	SIEMENS	1
E		6AG1 131-6BF00-7BA0	DIGITAL INPUT MODULE, SIPLUS ET200SP DI 8x24VDC ST	SIEMENS	3
		6AG1 193-6BP00-7DA0	BASE MODULE, WHITE	SIEMENS	3
F		6AG1 132-6HD00-7BB1	DIGITAL OUTPUT MODULE, SIPLUS ET200SP RQ 4x120VDC/230VAC/5A ST	SIEMENS	1
		6AG1 193-6BP20-7BB1	BASE MODULE, BLACK	SIEMENS	1
G		6AG1 134-6GD00-7BA1	ANALOG INPUT MODULE, SIPLUS ET200SP AI 4xI 2- / 4-WIRE ST	SIEMENS	1
		6AG1 193-6BP00-7DA0	BASE MODULE, WHITE	SIEMENS	1
H	SP1	DS220S-24DC	SURGE PROTECTOR, 24VDC	CITEL	1
I	NI	2313931	PROFINET NETWORK ISOLATOR	PHOENIX CONTACT	1
J	M	2002-1406	TERMINAL, PUSH-IN, 1-CIRCUIT, YELLOW	WAGO	1
K	L+	2002-1404	TERMINAL, PUSH-IN, 1-CIRCUIT, BLUE	WAGO	1
L	G	2002-1407	TERMINAL, PUSH-IN, 1-CIRCUIT, GREEN/YELLOW, GROUNDING	WAGO	1
M		2002-1492	TERMINAL END PLATE, ORANGE	WAGO	3
N		249-116	END ANCHOR, 6mm, GRAY	WAGO	2
O		210-112	DIN RAIL, GALVANIZED, SLOTTED, 2M	WAGO	1
P		PK5GTA	EQUIPMENT GROUND BAR KIT	SQUARE D	1

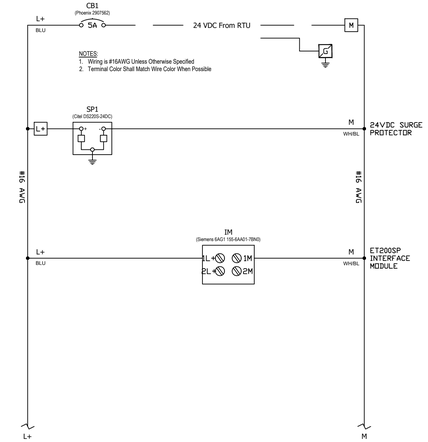

GENERAL NOTES:
1. THIS DRAWING IS AN EXAMPLE OF HOW OVERALL CABINET IS TO BE DESIGNED
2. REFER TO NOTES AND DETAILS ON ALL DRAWING SHEETS
3. ALL FIELD WIRING SHALL BE #18 AWG STRANDED, TIN-PLATED COPPER
4. ALL FIELD WIRING SHALL CONNECT DIRECTLY TO I/O BASE TERMINALS USING FERRULES WITH END SLEEVES
5. ALL PLC I/O WIRING SHALL BE #18 AWG
6. ALL MOUNTING SCREWS SHALL BE DRILLED AND TAPPED (NO SELF-TAPPING SCREWS ARE ALLOWED)
7. ALL MOUNTING SCREWS SHALL BE STAINLESS STEEL
8. DIN RAIL SHALL BE MODEL 1492-DR9 OR EQUIVALENT

CONTROL TERMINAL COLOR:

ORANGE	+12VDC SUPPLY
BROWN	-12VDC SUPPLY
BLUE	+24VDC CONTROL CIRCUITS
YELLOW	-24VDC CONTROL CIRCUITS
GRAY	REMOTELY POWERED CIRCUITS
GREEN/YELLOW	GROUND

ENCLOSURE:

SPN4AL-16166-W (16"H x 16"W x 6"D) NEMA 4X RATED, FABRICATED FROM .125 MARINE GRADE ALUMINUM WITH WHITE POLYESTER POWDER COAT FINISH INSIDE AND OUT. DOOR IS FITTED WITH A CUSTOM 3-POINT LATCH AND PAD-LOCKABLE HANDLE.

BACK PANEL:

SPP-1616 (13"H x 13"W) FABRICATED FROM 12GA. CARBON STEEL WITH WHITE ENAMEL FINISH.

DRAWING LAYER COLOR LEGEND:

GREY	NOTES
BLACK	ELECTRICAL SCHEMATIC WIRING DIAGRAMS AND DEVICES
BLUE	PART IDENTIFICATION
PURPLE	WIRE NUMBERS
GREEN	FIELD DEVICES AND WIRING OUTSIDE ENCLOSURE (DASHED)
RED	FUTURE / OPTIONAL DEVICES AND WIRING
TEAL	DIMENSIONS

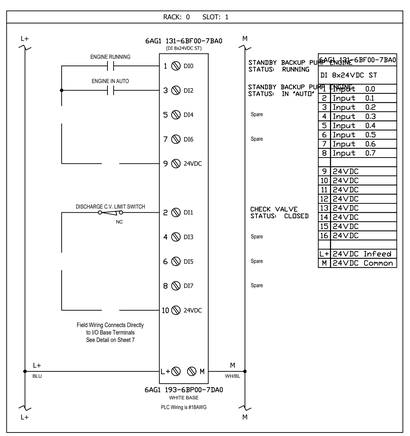

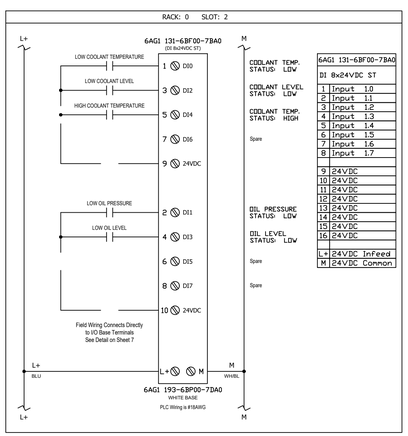

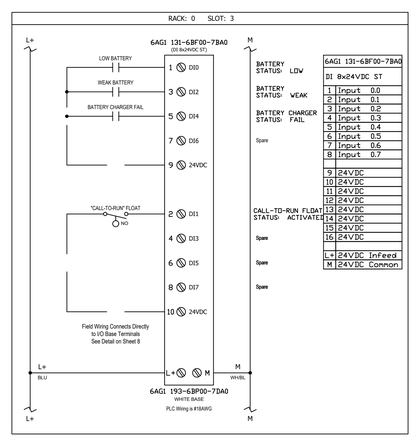

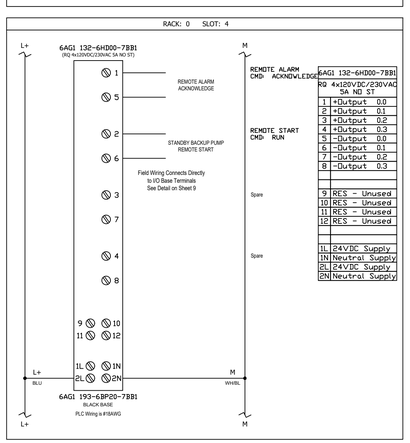

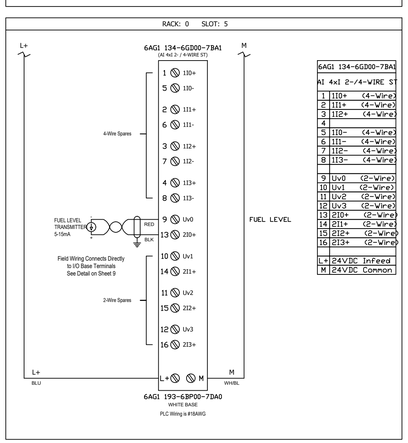

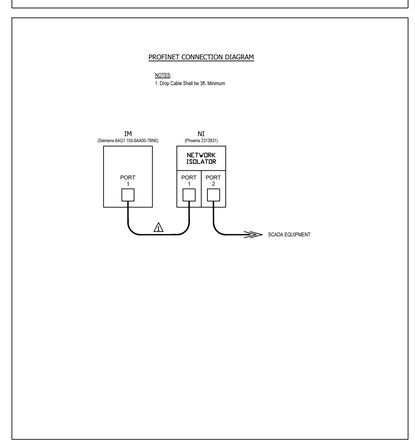

FIELD WIRING CONNECTION DETAILS

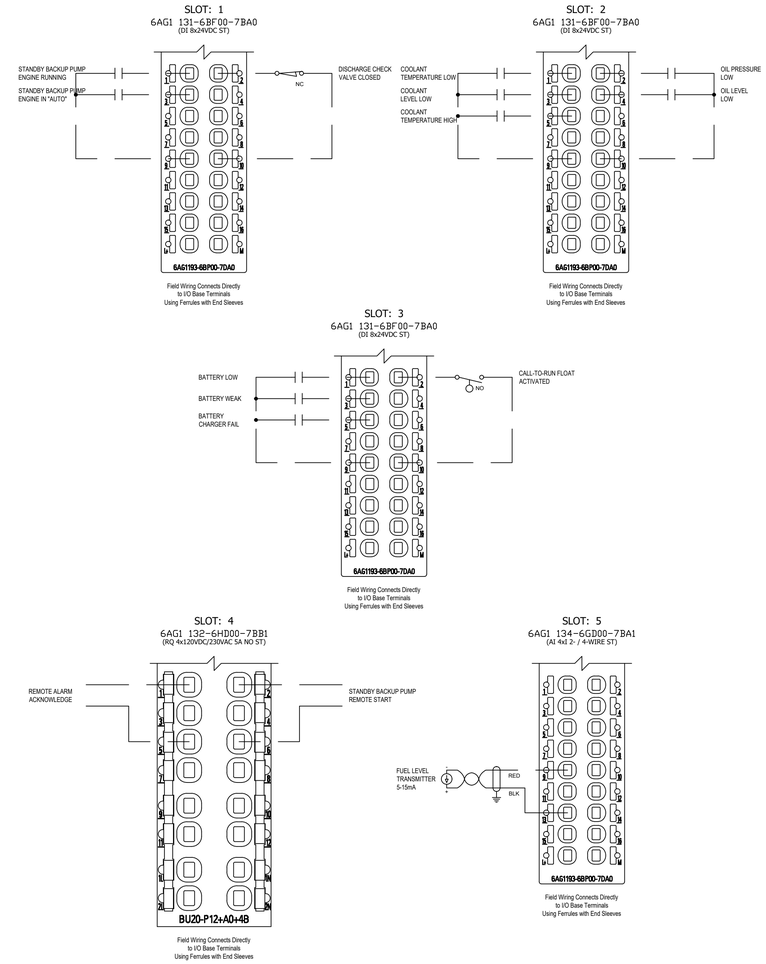

STANDARD

NO.	BY	DATE	REVISIONS
4.			
3.			
2.			
1.	LLOYD HENRY	9/25/2018	DRAWING ENLARGED

DESIGN ENGINEER:
FLORIDA REGISTRATION NO.

DESIGNER:
DRAWN BY:
DATE:
CHECKED BY:
DATE:

JEA Building Community

JEA STANDARD
PUMP STATION ELECTRIC DETAILS
STANDBY BACKUP PUMP DISTRIBUTED I/O PANEL

NO. SHEETS
PROJ. NO.
SHEET NO.
DATE:
DRAWING NO.
SCALE:

G:\Services\Shared\AutoCAD\henrla\Water Standards\2021\PUMP STATION DETAILS.dwg Current Layout Tab = STANDBY BACKUP PUMP DISTRIBUTED I_O PANEL Wed Feb 24, 2021 - 11:18

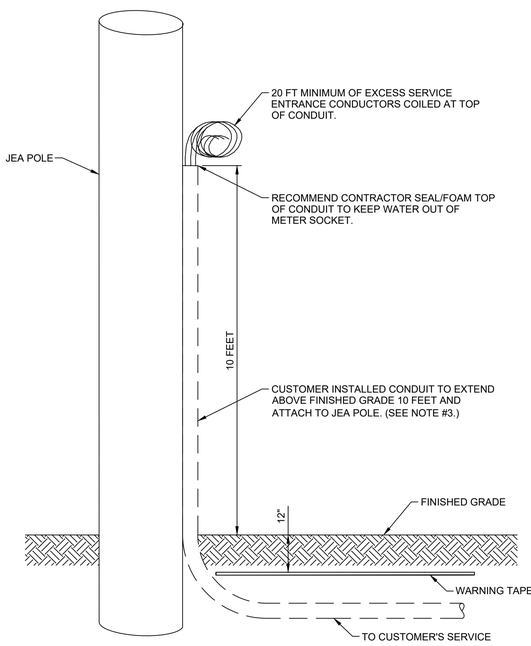

NOTES:

1. 100 AMP MAXIMUM SERVICE SIZE.
2. THE CUSTOMER WILL MAINTAIN THE WARNING TAPE, CONDUIT AND CONDUCTORS SHOWN.
3. THE CUSTOMER MUST PICK A CLEAR SIDE OF THE JEA POLE TO EXTEND UP CONDUIT. CLEAR FROM PHONE OR COMMUNICATION CABLES, OR ANY OTHER EQUIPMENT, FROM FINISHED GRADE TO JEA POINT OF SERVICE. CALL JEA DISTRIBUTION ENGINEER IF LOCATION IS REQUIRED.
4. THE JEA WILL MAKE ALL CONNECTIONS TO CUSTOMER'S SERVICE WIRE ON THE JEA POLE.
5. THE JEA WILL INSTALL CABLE GUARD ON JEA POLE AND COVER CUSTOMER'S SERVICE WIRE AND CONDUIT TO FINISHED GRADE.

COMMERCIAL SERVICE 100AMP MAXIMUM UNDERGROUND SERVICE FROM AN OVERHEAD POLE

NOT TO SCALE

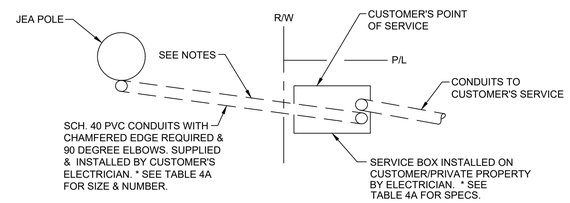

PLAN VIEW

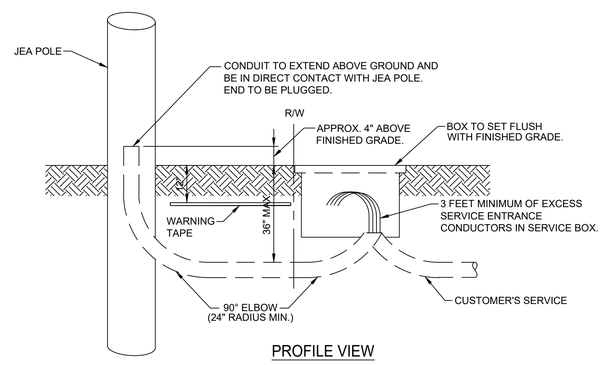

PROFILE VIEW

NOTES:

1. THE MINIMUM DISTANCE BETWEEN THE SERVICE BOX AND SERVICE POLE IS 4 FEET.
2. THE CUSTOMER MUST PICK A CLEAR SIDE OF THE JEA POLE FOR THE JEA TO EXTEND UP THE POLE RISER. CLEAR FROM PHONE OR COMMUNICATION CABLES, OR ANY OTHER EQUIPMENT, FROM FINISHED GRADE TO CONNECTIONS TO OVERHEAD FACILITIES. CALL JEA DISTRIBUTION ENGINEER IF LOCATION IS REQUIRED.
3. THE JEA WILL MAINTAIN THE POLE RISER AND CONDUCTOR FROM THE OVERHEAD FACILITIES TO A CUSTOMER-PROVIDED SERVICE BOX.
4. THE JEA WILL MAKE ALL CONNECTIONS TO THE CUSTOMER'S SERVICE WIRE IN THE SERVICE BOX. SAID CONNECTIONS WILL BE THE CUSTOMER'S POINT OF SERVICE.

COMMERCIAL SERVICE ABOVE 100 AMPS AND MULTI-METERED UNDERGROUND SERVICE FROM AN OVERHEAD POLE

NOT TO SCALE

TABLE 4A

CONDUIT AND SERVICE BOX REQUIREMENTS FOR UNDERGROUND COMMERCIAL SERVICES FROM AN OVERHEAD POLE

SERVICE SIZE	CONDUIT SIZE (From Service Box to JEA Overhead Pole)	SERVICE BOX SIZE
20A - 150A	1-2 in	13" x 24" x 18" d
151A -200A	1-3 in	17" x 30" x 18" d
201A - 399A	1-3 in	24" x 36" x 18" d
400A-800A	400A=1-4 in 401-800A=2-4 in	30" x 48" x 24" d manhole
801A-1400A	801-1000A=2-4 in 1001-1400A=3-4 in	36" x 60" x 36" d manhole

NOTE:

1. ALL CONDUITS TO BE SCHEDULE 40 PVC WITH CHAMFERED EDGES REQUIRED. CONDUIT SIZE AND NUMBER DOES NOT HAVE TO MATCH CUSTOMERS' SERVICE CONDUIT SIZE, TYPE, AND NUMBER.
2. ALL CONDUIT RADIUS TO BE 24 INCH MINIMUM.
3. JEA WILL ALLOW THE OPTION OF PURCHASING THESE BOXES FROM AN ELECTRICAL SUPPLY HOUSE. THESE BOXES MUST MEET THE FOLLOWING SPECIFICATIONS.
4. SERVICE BOX SIZE MAY VARY FOR 3 PHASE APPLICATIONS.
5. CONTACT JEA SERVICE ENGINEER FOR CONDUIT AND BOX LOCATION.

TECHNICAL SPECIFICATIONS

MATERIAL SPECIFICATIONS:

SERVICE BOX

1. TOP: COMPRESSION MOLDED POLYMER CONCRETE WITH MINIMUM THICKNESS OF TWO INCHES.
2. BODY: REINFORCED PLASTIC MORTAR (RPM) CONSISTING OF FIBERGLASS AND ISOPHOLIC RESIN. THE BASE WILL HAVE A FLANGE OF TWO INCHES FROM THE INSIDE WALL.
3. RING: THE RING WILL BE OF POLYMER CONCRETE AND WILL BE PERMANENTLY FUSED TO THE BODY DURING THE CURING PROCESS.

MANHOLE

1. MANHOLE BODY SHALL BE OF ONE PIECE CONSTRUCTION WITH A SOLID COVER.
2. MANHOLE DIMENSIONS SHALL BE 60" L X 36" W X 36"D.

LOAD RATING:

1. LOAD RATING: H-10 (INCIDENTAL TRAFFIC).
2. LOAD RATINGS SHALL BE IN ACCORDANCE WITH ASTM, C-857-87 (STD. PRACTICE FOR MINIMUM STRUCTURAL DESIGN LOADING FOR UG PRECAST CONCRETE UTILITY STRUCTURES) AASHTO AND WESTERN UNDERGROUND COMMITTEE RECOMMENDED GUIDELINES RULE 3.6 DATED 6-15-87.

MISCELLANEOUS REQUIREMENTS:

1. HARDWARE: TWO CAPTIVE STAINLESS PENTA HEAD BOLTS FOR SECURING TOP. BOLT HEADS WILL BE FLUSH WITH TOP OF COVER.
2. IDENTIFICATION: EACH TOP WILL HAVE THE WORD "ELECTRIC" PERMANENTLY MARKED INTO THE TOP.

ELECTRICAL NOTES

1. GROUND WIRE SHALL RUN FROM THE CHASSIS CONTINUOUS THROUGH THE METER CAN TO 2 GROUND RODS SPACED 6 FEET APART AND TERMINATE ON A FENCE POST IN CONCRETE.
2. ELECTRICAL ENCLOSURES SHALL BE ORIENTED SUCH THAT THE FRONT OF THE ENCLOSURE FACES THE INTERIOR OF THE PUMP STATION SITE.
3. QUANTITY AND SIZE OF NEMA 4x 316-STAINLESS STEEL ENCLOSURES AS REQUIRED FOR STATION OPERATION.
4. SERVICE DISCONNECT SHALL BE MANUAL FUSE 3 PHASE-4 WIRE

STANDARD

NO.	BY	DATE	REVISIONS
4.			
3.			
2.			
1.			

DESIGN ENGINEER:
FLORIDA REGISTRATION NO.

DESIGNER:
DRAWN BY:
DATE:
CHECKED BY:
DATE:

JEA Building Community

JEA STANDARD
PUMP STATION ELECTRIC DETAILS
SERVICE DETAILS

NO. SHEETS
SHEET NO.
DRAWING NO.
PROJ. NO.
DATE:
SCALE:

G:\Services\Shared\AutoCAD\henrio\Water Standards\2021\PUMP STATION DETAILS.dwg Current Layout Tab = SERVICE DETAILS Wed Feb 24, 2021 - 11:18

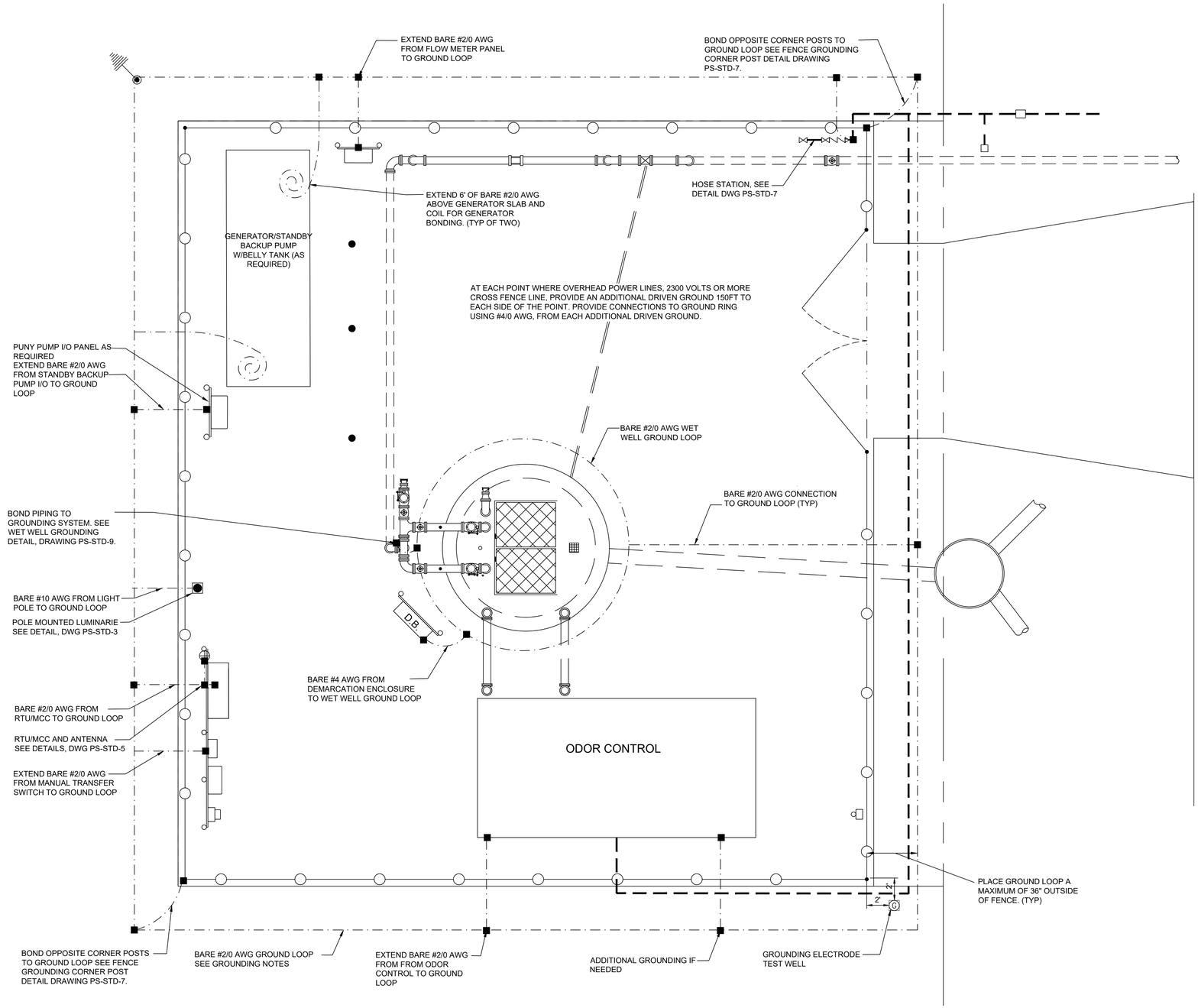

PUMP STATION GROUNDING SITE PLAN

NOT TO SCALE

GROUNDING SYMBOL LEGEND

- GROUND CONDUCTOR (SIZE AS REQUIRED BY NOTES)
- EXOTHERMIC OR COMPRESSION CONNECTION
- GROUND ROD AND CONNECTION
- G — GROUND TEST WELL WITH GROUND ROD
- (5) — GROUND CONDUCTOR COILED ABOVE GRADE OR SLAB FOR FUTURE CONNECTION

GROUNDING NOTES:

PROVIDE A COMPLETE ELECTRICAL GROUNDING SYSTEM WITH A MEASURED GROUND RESISTANCE OF 5 OHMS OR LESS.

GROUNDING COMPONENTS AND MATERIALS SHALL BE NEW AND UNDAMAGED.

INSULATED GROUND CONDUCTOR SHALL BE SOFT DRAWN, TIN PLATED, STRANDED COPPER CONFORMING TO THE REQUIREMENTS OF UL 83. INSULATED GROUND CONDUCTOR SHALL BE TYPE TW OR THW, AND GREEN COLORED INSULATION. MINIMUM SIZE FOR INSULATED GROUND CONDUCTORS, REGARDLESS OF APPLICATION SHALL BE #12 AWG.

BURIED GROUND LOOP CONDUCTORS

A. GROUND LOOP CONDUCTOR SHALL BE BARE #2/0 AWG, SOFT DRAWN, TIN PLATED STRANDED COPPER CONDUCTOR UNLESS OTHERWISE NOTED.

B. BARE GROUND CONDUCTORS BELOW GRADE, SHALL HAVE A MINIMUM OF 18 INCHES AND A MAXIMUM OF 30 INCHES COVER FROM FINISHED GRADE. BARE GROUND CONDUCTORS UNDER FOUNDATIONS OR SLABS, SHALL HAVE A MINIMUM OF 6 INCHES OF EARTH COVER BETWEEN THE TOP OF CONDUCTOR CONDUCTOR AND THE FOUNDATION OR SLAB.

C. BARE GROUND CONDUCTORS THAT PENETRATE THROUGH EXPOSED SLABS OR WET WELL WALL, SHALL DO SO THROUGH A 3/4" x 12" (MIN), SCHED 40 PVC SLEEVE. WITH GROUND WIRE CENTERED IN SLEEVE, FILL TOP OF SLEEVE WITH APPROVED SEALANT TO A DEPTH AT LEAST 3 TIMES THE OUTSIDE DIAMETER OF THE SLEEVE. ALL WIRES PROTRUDING TO THE SURFACE SHALL BE TIN PLATED.

D. BARE GROUND CONDUCTOR SHALL BE DIRECTLY BURIED IN EARTH; TO WITHIN 24 TO 36 INCHES FROM BASE OF STRUCTURES OR EQUIPMENT IDENTIFIED FOR GROUNDING.

GROUND RODS

A. SHALL BE COPPER CLAD MIN 13MIL, COLD DRAWN CARBON STEEL MANUFACTURED IN ACCORDANCE WITH UL 467, WITH THE COPPER CLADDING BONDED TO THE STEEL ROD BY ELECTROLYTIC, OR MOLTEN WELDING PROCESS. GROUND RODS SHALL HAVE A CONICAL TAPER ON PENETRATING END. EACH GROUND ROD SHALL BE 10-FOOT BY 3/4 INCH DIAMETER SECTIONS.

B. THERE SHALL BE A MINIMUM OF 2 GROUND RODS THAT SHALL BE DRIVEN TO A MINIMUM OF 60FT EACH. IF GROUND RODS ARE UNABLE TO BE DRIVEN 60FT OR 5 OHMS IS NOT ACHIEVED THEN ADDITIONAL GROUND RODS MUST BE DRIVEN TILL THE 5 OHMS IS REACHED. IF AN ADDITIONAL GROUND ROD IS REQUIRED IT MUST BE DRIVEN IN A CORNER THAT DOESN'T HAVE A ROD.

C. GROUND RODS SHALL BE CONNECTED BY COMPRESSION COUPLINGS, SCREW COUPLINGS WILL NOT BE ACCEPTED.

5. GROUNDING SYSTEM HARDWARE

A. GROUNDING SYSTEM HARDWARE, INCLUDING CLAMPS, CONNECTORS, BOLTS, WASHERS, AND NUTS, SHALL BE TIN PLATED COPPER.

B. SPLICES, JOINTS, AND CONNECTIONS BELOW GRADE SHALL BE EXOTHERMIC OR IRREVERSIBLE COMPRESSION TYPE. THREADED OR BOLTED COUPLINGS ARE NOT ACCEPTABLE EXCEPT WHERE NOTED IN GROUNDING DETAILS.

C. PREPARE CONDUCTORS AND CONNECTORS PER MANUFACTURERS REQUIREMENTS. REMAKE CONNECTIONS THAT FAIL MANUFACTURER'S RECOMMENDED TESTS.

D. GROUNDING CONNECTIONS SHALL ENCOMPASS 100 PERCENT OF THE GROUND CONDUCTOR AND CONDUCTOR ENDS.

E. GROUND LUGS SHALL BE SINGLE OR TWO-HOLE, HEAVY-DUTY, TIN PLATED COPPER BARS CONFORMING TO THE REQUIREMENTS OF IEEE 837 AND UL 467. TWO-HOLE GROUND LUGS SHALL HAVE NEMA CENTERLINE HOLE SPACING. GROUND LUGS USING AN EXOTHERMIC PROCESS SHALL BE SIMILAR TO TYPE LA AS MANUFACTURED BY ERICO.

F. MAKE CABLE CONNECTIONS TO BUS BARS USING HIGH-COMPRESSION LUGS. GROUND LUGS USED WITH THE COMPRESSION PROCESS SHALL BE TYPE YGHA AS MANUFACTURED BY BURNDY ELECTRICAL.

6. BOND PIPING TO GROUNDING SYSTEM VIA CONNECTION AT THE LAST FLANGE BEFORE PIPES RETURN UNDERGROUND. SEE WET WELL GROUNDING DETAIL.

7. GROUNDING BY USE OF ANCHOR BOLTS, AGAINST GASKETS, ON PAINTED OR VARNISHED SURFACES, OR ON BOLTS HOLDING REMOVABLE ACCESS COVERS WILL NOT BE ACCEPTABLE.

8. GROUND RESISTANCE SHALL BE CERTIFIED BY AN INDEPENDENT GROUNDING SYSTEM TESTING ORGANIZATION. TESTING SHALL BE DONE AT EACH TEST WELL USING THE 3-POINT FALL OF POTENTIAL METHOD. THIS DOCUMENT MUST BE SUBMITTED AT THE TIME OF STARTUP FOR FINAL ACCEPTANCE.

9. NO CHEMICALS SHALL BE USED TO REDUCE THE RESISTANCE UNLESS APPROVED BY JEA.

10 A MINIMUM OF 5 OHMS OF SHALL BE GUARANTEED BY THE CONTRACTOR FOR 3 YEARS FROM THE SITES ACCEPTANCE. IF THE RESISTANCE FAILS IN THIS TIME THE CONTRACTOR WILL BE RESPONSIBLE FOR ADDING ADDITIONAL GROUND RODS AT THE CONTRACTORS EXPENSE.

STANDARD

NO.	BY	DATE	REVISIONS
4.			
3.			
2.			
1.	LLOYD HENRY	9/25/2018	DRAWING UPDATED

DESIGN ENGINEER:
FLORIDA REGISTRATION NO.

DESIGNER:
DRAWN BY:
DATE:
CHECKED BY:
DATE:

JEA Building Community

JEA STANDARD
PUMP STATION ELECTRIC DETAILS
GROUNDING SITE PLAN

NO. SHEETS
SHEET NO.
PROJ. NO.
DATE:
SCALE:
DRAWING NO.

G:\Services\Shared\AutoCAD\henrio\Water Standards\2021\PUMP STATION DETAILS.dwg Current Layout Tab = GROUNDING SITE PLAN Wed Feb 24, 2021 - 11:18

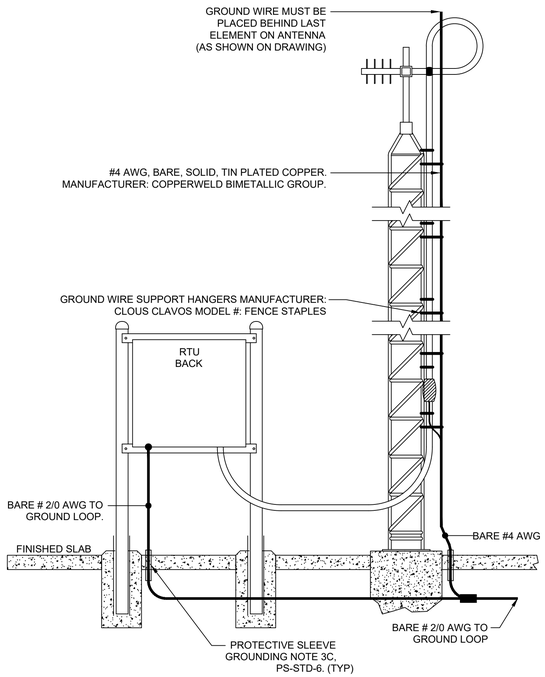

ALTERNATE ANTENNA - GROUNDING DETAIL

FOR POLE HEIGHTS 20 FEET AND ABOVE
NOT TO SCALE

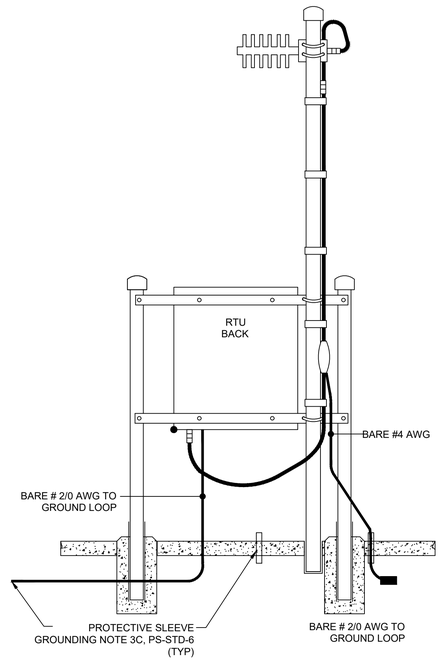

STANDARD ANTENNA - GROUNDING DETAIL

NOT TO SCALE

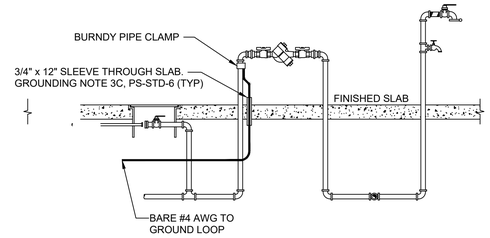

HOSE STATION GROUNDING DETAIL

NOT TO SCALE

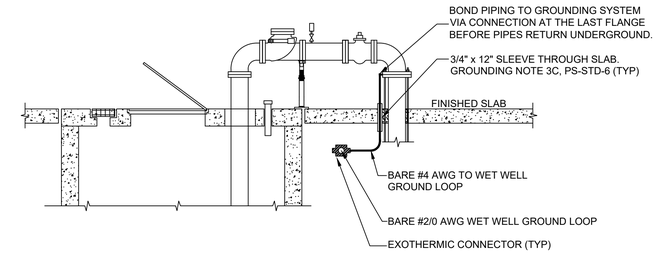

WETWELL GROUNDING DETAIL

NOT TO SCALE

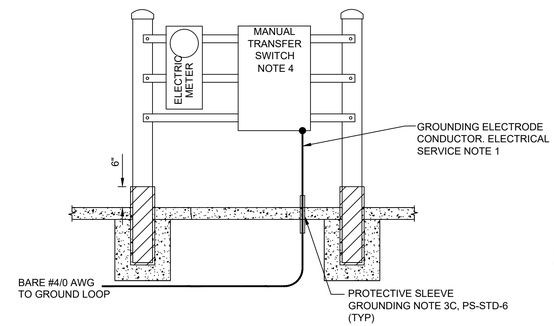

MANUAL TRANSFER SWITCH GROUNDING DETAIL

NOT TO SCALE

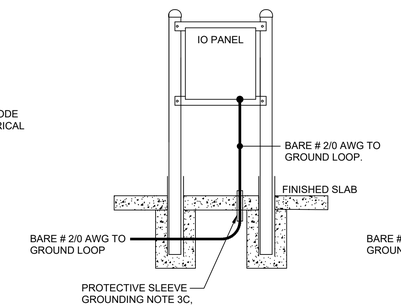

STANDBY BACKUP PUMP I/O GROUNDING DETAIL

NOT TO SCALE

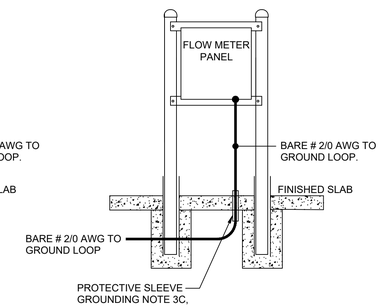

FLOW METER GROUNDING DETAIL

NOT TO SCALE

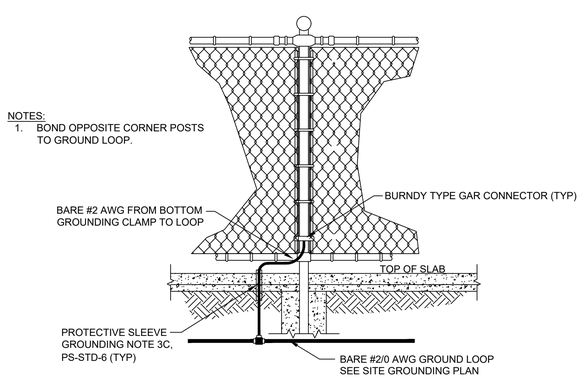

FENCE GROUNDING CORNER POST DETAIL

NOT TO SCALE

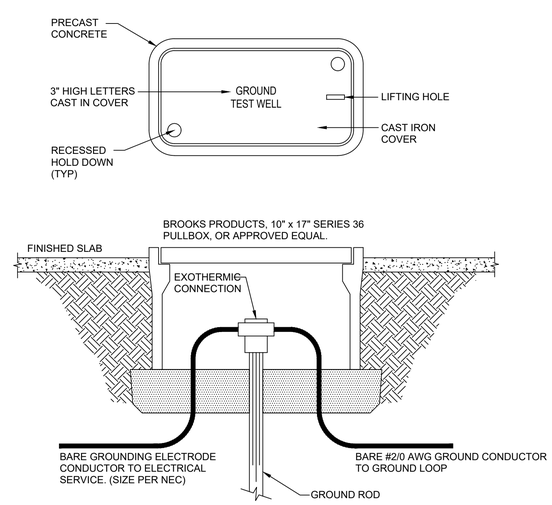

GROUND SYSTEM TEST WELL DETAIL

NOT TO SCALE

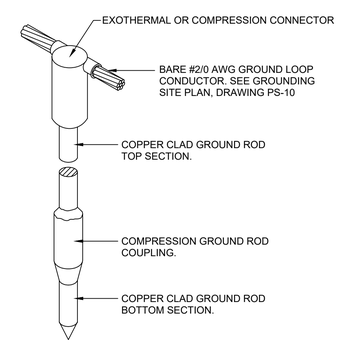

TYPICAL GROUND ROD & CONNECTION DETAIL

NOT TO SCALE

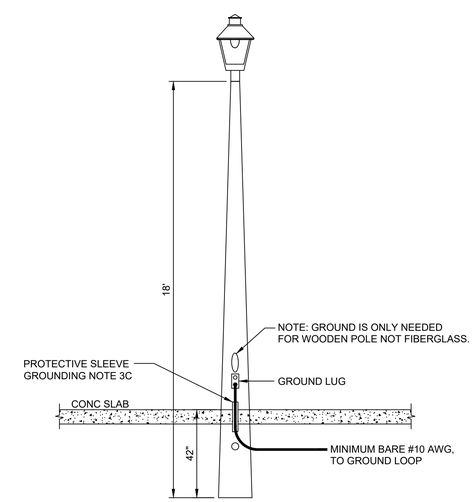

SITE LIGHT GROUNDING DETAIL

NOT TO SCALE

STANDARD

NO.	BY	DATE	REVISIONS
4.			
3.			
2.			
1.	LLOYD HENRY	9/25/2018	MANUAL TRANSFER SWITCH

DESIGN ENGINEER:
FLORIDA REGISTRATION NO.

DESIGNER:
DRAWN BY:
DATE:
CHECKED BY:
DATE:

JEA Building Community

JEA STANDARD
PUMP STATION ELECTRIC DETAILS
GROUNDING DETAILS

PROJ. NO.
DATE:
SCALE:
NO. SHEETS
SHEET NO.
DRAWING NO.

G:\Services\Shared\AutoCAD\henrlo\Water Standards\2021\PUMP STATION DETAILS.dwg Current Layout Tab = GROUNDING DETAILS Wed Feb 24, 2021 - 11:18

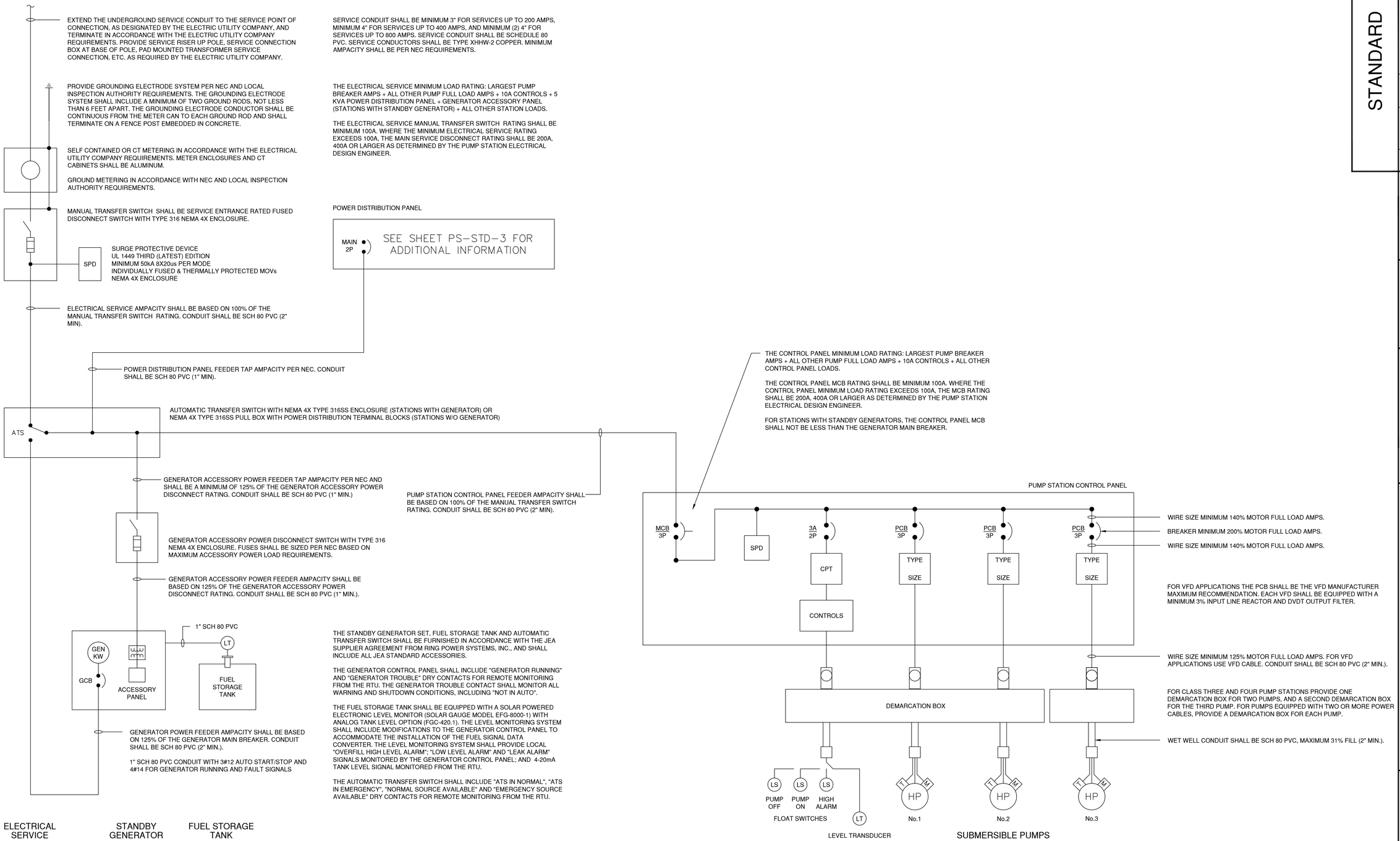

ELECTRIC SINGLE LINE DETAIL DIGRAM

STANDARD

NO.	BY	DATE	REVISIONS
4.			
3.			
2.			
1.	LLOYD HENRY	9/25/2018	TITLE ADDED

DESIGN ENGINEER:
FLORIDA REGISTRATION NO.

DESIGNER:
DRAWN BY:
DATE:
CHECKED BY:
DATE:

JEA Building Community

JEA STANDARD
PUMP STATION ELECTRIC DETAILS
ELECTRIC SINGLE LINE DIAGRAM

PROJ. NO.
DATE:
SCALE:
NO. SHEETS
SHEET NO.
DRAWING NO.

G:\Services\Shared\AutoCAD\henrlo\Water Standards\2021\PUMP STATION DETAILS.dwg Current Layout Tab = ELECTRIC SINGLE LINE DIAGRAM Wed Feb 24, 2021 - 11:18

INSTRUCTIONS:

1. CONTRACTOR SHALL USE THIS DRAWING FILE TO CREATE SHOP DRAWINGS FOR JEA REVIEW.
2. RETURN COMPLETED SHOP DRAWINGS AS PDF FILE TO ARISS FAJARDO AT FAJAAJ@JEA.COM FOR APPROVAL.
3. PLEASE CONTACT ARISS FAJARDO FOR QUESTIONS OR ADDITIONAL INFORMATION.
4. DO NOT PRINT THIS SHEET IN SUBMITAL SET.

NO.	BY	DATE	REVISIONS
6.			
5.			
4.			
3.			
2.			
1.	AJF	12/13/19	INITIAL REVISION

ELECTRICAL SCHEMATIC

MANUFACTURER
ADDRESS1
ADDRESS2

CONTACT_NAME
CONTACT_NUMBER

JEA Building Community sm

DESIGNER:
DRAWN BY:
DATE:
CHECKED BY:
DATE:
2021 STANDARD PACKAGE, REV. 1

SHEET TITLE: INSTRUCTION SHEET
PROJECT: --- PROJECT NAME ---
1-PH. TO 3-PH. VFD LIFT STATION DIAGRAM
JOB No: 12345678
SHEET 0 OF 10

FRONT VIEW

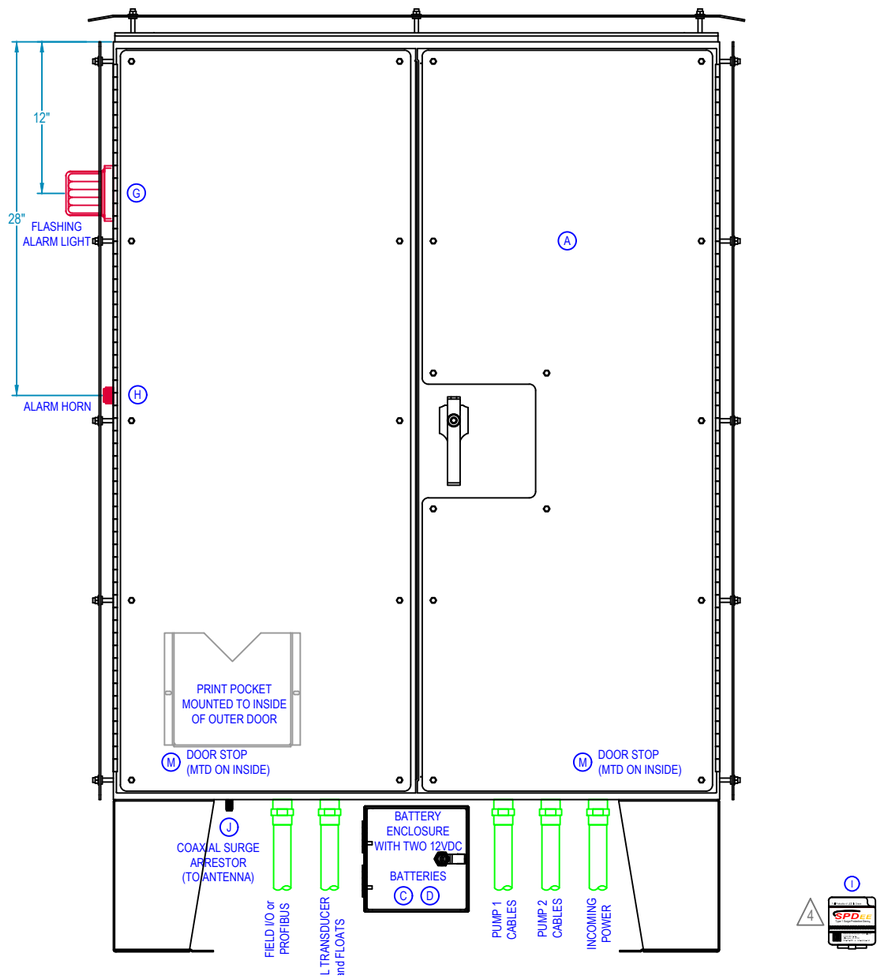

BILL of MATERIAL

	QTY	MANUFACTURER	PART NUMBER	DESCRIPTION
2 A	1	OEM	CUSTOM ENCLOSURE	SEE THIS SHEET FOR DETAILS
2 B	2	OEM	CUSTOM INNER DOORS	SEE THIS SHEET FOR DETAILS
C	1	SCHAEFER	SPN1AL-888-JEA	BATTERY ENCLOSURE, .125 ALUMINUM
D	2	POWER SONIC	PS-12180 F2	BATTERY, LEAD-ACID, 12VDC, 18Ah
E	--	--	--	--
F	1	SIEMENS	52PX8A1K / 52BAK	MOMENTARY PUSHBUTTON, 30mm, FLUSH
G	1	INGRAM PRODUCTS	LX40F	ALARM LIGHT W/ FLASHER, 120VAC, RED
H	1	INGRAM PRODUCTS	PW120AR	ALARM HORN, ELECTRONIC, 120VAC, RED
4 I	1	APT	S50A120V2P	SURGE PROTECTOR, 240V SPLIT PHASE
J	1	TIMES-PROTECT	LP-STR-NFF	COAXIAL SURGE ARRESTOR (ANTENNA)
K	1	SIEMENS	6AV6 647-0AH11-3AX0	OPERATOR PANEL KP300 DISPLAY
L	2	OMRON	6X283	SNAP ACTION SWITCH (DOOR AJAR)
	2	ALLIED	642-2137	ACTUATOR FOR SWITCH
M	4	SCHAEFER	SP-DSTOPK-SS-SW	INNER/OUTER DOOR STOP KIT, SS
N	--	--	--	--
O	2	CUTLER-HAMMER	OPTRMT-9000-KIT	VFD HMI DISPLAY
P	2	SIEMENS	52SX2BAB	3 POSITION MAINTAINED SWITCH, 30mm
	2	SIEMENS	52BJK	CONTACT BLOCK, 1NO-1NC

INNER DOOR VIEW

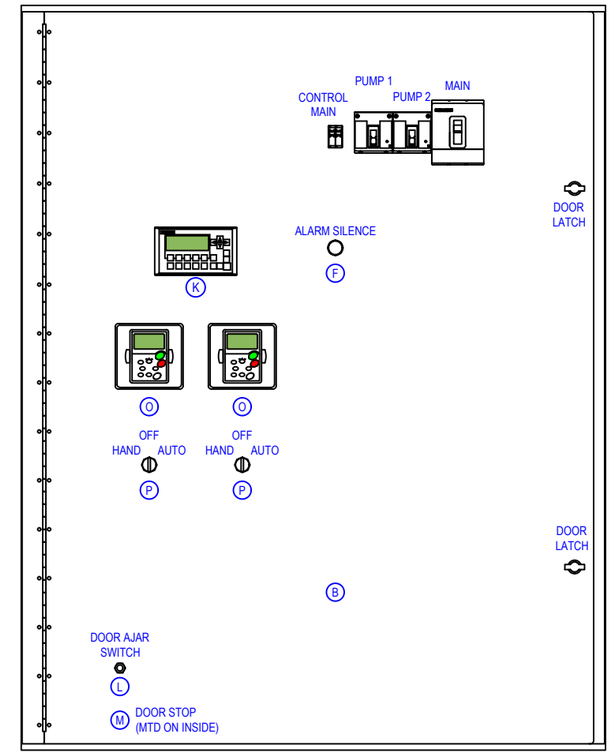

HINGED INNER DOORS:
FABRICATED FROM .125 ALUMINUM WITH CONTINUOUS HINGE, TWIST LATCHES, AND DOOR STOP MOUNTED ON INSIDE OF EACH.

CONTROL WIRE UL508A COLOR:

RED	-	120 VAC
WHITE	-	NEUTRAL
BLUE	-	+24 VDC
WHITE / BLUE STRIPE	-	0 VDC

GENERAL NOTES:

1. REFER TO "433 LIFT STATION SCADA CONTROLS SPECIFICATION" FOR FURTHER DETAILS THAT MUST BE ADHERED TO SUCH AS WIRE, CONTACTOR, AND CIRCUIT BREAKER SIZING.
2. THIS DRAWING IS AN EXAMPLE OF HOW OVERALL CABINET IS TO BE DESIGNED. THE DRAWING WILL NEED TO BE REVISED BASED ON THE PUMP MANUFACTURER, SIZE AND NUMBER OF PUMPS. THINGS THAT WILL CHANGE ARE ENCLOSURE SIZE, CIRCUIT BREAKER SIZE, WIRE SIZE, VFD SIZE, AND OTHER ITEMS. REFER TO SPECIFICATIONS FOR FURTHER DETAILS.
3. REFER TO NOTES AND DETAILS ON ALL DRAWING SHEETS FOR MORE MANUFACTURING DETAILS.
4. THE SURGE PROTECTION DEVICE (SPD) IS TO BE SHIPPED LOOSE FOR MOUNTING AT THE DISCONNECT IN THE FIELD. THE CORRECT SPD MUST BE SELECTED BASED ON THE SERVICE VOLTAGE: 240V SINGLE PHASE.
5. ALL FIELD WIRING SHALL BE #12 AWG STRANDED, TIN-PLATED COPPER. APPLY DIELECTRIC GREASE TO ENDS TO PREVENT CORROSION.
6. ALL PLC I/O WIRING INTERNAL TO THE CONTROL PANEL SHALL BE #18 AWG.
7. ALL WIRES IN CONTROL PANEL SHALL BE TERMINATED WITH FERRULES.
8. ALL MOUNTING SCREWS SHALL BE STAINLESS STEEL, DRILLED AND TAPPED (NO SELF-TAPPING SCREWS ARE ALLOWED).

CUSTOM ENCLOSURE:
(60"H x 48"W x 20"D) NEMA 12/3R RATED, FABRICATED FROM .125 MARINE GRADE ALUMINUM. OUTER DOORS ARE FITTED WITH A PADLOCKABLE 3-POINT LATCH AND DOOR STOPS. ENCLOSURE IS MOUNTED ON 12-INCH TYPE 316 STAINLESS STEEL LEGS.

HEAT SHIELDS FABRICATED FROM .125 MARINE GRADE ALUMINUM SHALL BE INSTALLED ON FRONT, BACK, TOP, AND SIDES. HOLES SHALL BE CUT IN SHIELD FOR ALARM LIGHT AND HORN.

NOTE: BATTERY ENCLOSURE IS TO BE INSTALLED IN THE FIELD

NO.	BY	DATE	REVISIONS
6.			
5.			
4.			
3.			
2.			
1.			

ELECTRICAL SCHEMATIC

MANUFACTURER
ADDRESS1
ADDRESS2

CONTACT_NAME
CONTACT_NUMBER

JEA Building Community sm

DESIGNER:	
DRAWN BY:	
DATE:	
CHECKED BY:	
DATE:	
2021 STANDARD PACKAGE, REV. 1	

SHEET TITLE: FRONT PANEL VIEW

PROJECT: --- PROJECT NAME ---

1-PH. TO 3-PH. VFD LIFT STATION DIAGRAM

JOB No: 12345678

SHEET 1 OF 10

BACK PANEL LAYOUT

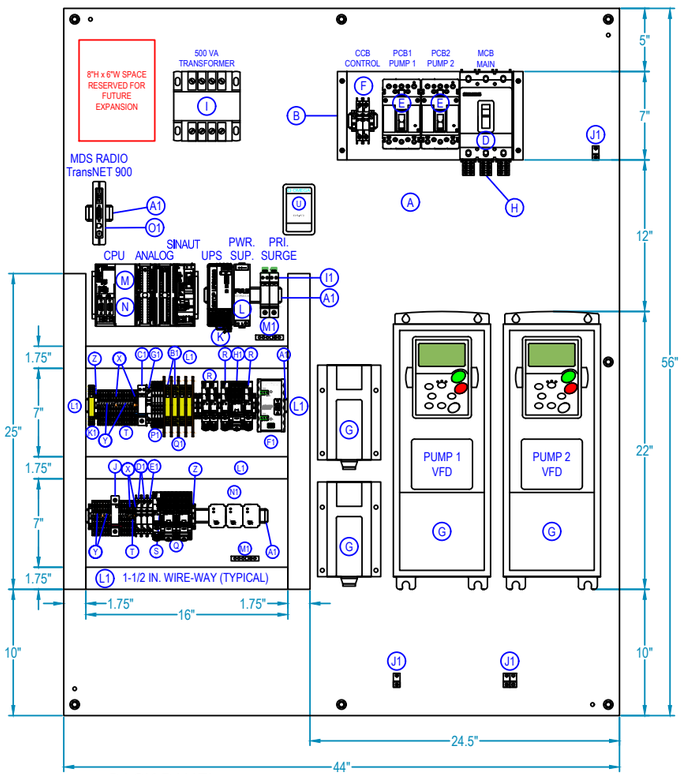

BACK PANEL:
(56"H x 44"W) FABRICATED FROM 10ga. CARBON STEEL
WITH WHITE INDUSTRIAL GRADE ENAMEL FINISH.

DRAWING LAYER COLOR LEGEND:

GREY	-	NOTES
BLACK	-	ELECTRICAL SCHEMATIC WIRING DIAGRAMS AND DEVICES
BLUE	-	PART IDENTIFICATION
PURPLE	-	WIRE NUMBERS
GREEN	-	FIELD DEVICES AND WIRING OUTSIDE ENCLOSURE (DASHED)
RED	-	FUTURE DEVICES AND WIRING
TEAL	-	DIMENSIONS

BILL of MATERIAL

		QTY	MANUFACTURER	PART NUMBER	DESCRIPTION
2	A	1	SCHAEFER	SPDD-6048	BACK PANEL, CARBON STEEL, WHITE
2	B	1	OEM	BREAKER MOUNT	TO RAISE CBs FLUSH WITH INNER DOOR
	C	--	--	--	--
2	D	1	SIEMENS	NFG3B125L	MCB, 3 POLE, 125A
2	E	2	SIEMENS	NEG3B060L	PCB1 and PCB2, 3 POLE, 60A
	F	1	WEIDMULLER	9926 25 2006	CCB, UL489, 2 POLE, 6A (240V SERVICE)
2	G	2	CUTLER-HAMMER	SVX010A1-2A1B1	VFD, VARIABLE TORQUE, 10HP
7 2		2	CUTLER-HAMMER	SP21-KIT	VFD CAPACITOR KIT, EXTERNAL
		2	CUTLER-HAMMER	OPTC5	VFD PROFIBUS DP, DB9 CONNECTOR
2	H	1	SIEMENS	3TA6EG06	POWER DISTRIBUTION LUGS, KIT OF 3
	I	1	SIEMENS	MT0500A	CONTROL TRANSFORMER, 500VA
	J	1	CITEL	DS41S-120	120VAC SURGE SUPPRESSOR, BASE
	K	1	SIEMENS	6EP4 134-3AB00-0AY0	SITOP DC UPS, 10A WITH CHARGER
	L	1	PULS	CS5.241	24VDC POWER SUPPLY, 5A
	M	1	SIEMENS	6ES7 390-1AE80-0AA0	480mm MOUNTING RAIL FOR PLC EQUIP.
		1	SIEMENS	6ES7 313-6CG04-0AB0	CPU 313C-2DP, 16 DI - 16 DO PLC
		1	SIEMENS	6ES7 953-8LG30-0AA0	MMC MEMORY CARD, 128KB
		1	SIEMENS	6ES7 331-1KF02-0AB0	8 FUNCTION ANALOG INPUT MODULE
		2	SIEMENS	6ES7 392-1BM01-0AA0	40-PIN SPRING CONNECTOR
		1	SIEMENS	6NH7 800-3BA00	SINAUT ST7, TIM 3V-IE MODULE
	N	2	BRAD HARRISON	PA9D01-42	PROFIBUS CONNECTOR, 90°, PG PORT
	O	2	BRAD HARRISON	MA9D00-42	PROFIBUS CONNECTOR, 180°
	P	1	SIEMENS	6XV1830-0EH10	PROFIBUS CABLE, FAST CONNECT TYPE
	Q	2	FINDER	58P481205060	RELAY, STATUS, SPRING, 4NO-NC, 120VAC
	R	4	FINDER	4CP190245050	RELAY, STATUS, SPRING, SPDT, 24VDC
	S	1	FINDER	4CP181205060	RELAY, STATUS, SPRING, SPDT, 120VAC

BILL of MATERIAL

		QTY	MANUFACTURER	PART NUMBER	DESCRIPTION
	T	29	WAGO	2002-1401	TERMINAL, 2002, SPRING, GRAY
	U	1	OMEGA	EWS-RTD	PT100 TEMPERATURE SENSOR, RTD
	V	2	SIEMENS	6GK1901-1BB10-2AA0	PROFINET CONNECTOR, SIPLUS
	W	1	SIEMENS	6XV1840-2AH10	PROFINET CABLE, FAST CONNECT
	X	7	WAGO	2002-1492	TERMINAL END / PART. PLATE, ORANGE
	Y	20	WAGO	2002-400	ADJACENT JUMPER, 2-WAY CONTINUOUS
	Z	8	WAGO	249-116	TERMINAL END STOP, GRAY
	A1	1	WAGO	210-112	2M DIN RAIL, GALVANIZED, SLOTTED
	B1	4	CITEL	DLAW-24D3	ANALOG SURGE SUPPRESSOR, 24VDC
	C1	1	CITEL	DS220S-24DC	24VDC SURGE SUPPRESSOR
	D1	2	WEIDMULLER	9926 25 1000	CB11 and CB12, UL489, 1 POLE, 0.5A
	E1	1	WEIDMULLER	9926 25 1002	CB13, UL489, 1 POLE, 2A
	F1	1	PROCENTEC	101-00211A	PROFIBUS TERMINATOR
	G1	1	WEIDMULLER	9926 25 1910	CB20, UL489, 1 POLE, 10A
	H1	1	FINDER	58P490245050	RELAY, STATUS, SPRING, 4NO-NC, 24VDC
	I1	1	CITEL	DS42S-400	PRIMARY SPD, TYPE 1, 240V SINGLE PHASE
	J1	4	PANDUIT	LAMA2-14-QY	GROUND LUG, DUAL-RATED, #2-14AWG
	K1	1	CITEL	DLA-12D3	PROFIBUS SURGE PROTECTOR
	L1	2	PANDUIT	1.5"W x 3"H x 72"L	WIREWAY, HINGE COVER, WIDE FINGER
	M1	2	SQUARE D	PK5GTA	EQUIPMENT GROUND BAR, 5-POINT
4	N1	3	MACROMATIC	TCP2G100	SEAL LEAK / OVERTEMP RELAY, 120VAC
		1	MDS	TRANSNET 900	RADIO, SPREAD-SPECTRUM, UNLICENSED
5	O1	1	MDS	03-4124A01	DIN RAIL MOUNT KIT
		1	TFS, INC.	--	SINAUT TO RADIO NULL CABLE
	P1	4	WAGO	857-411	ANALOG SIGNAL ISOLATOR
	Q1	5	WAGO	209-191	SEPARATOR, ORANGE

GENERAL NOTES:

1. REFER TO "433 LIFT STATION SCADA CONTROLS SPECIFICATION" FOR FURTHER DETAILS THAT MUST BE ADHERED TO SUCH AS WIRE, CONTACTOR, AND CIRCUIT BREAKER SIZING.
2. THIS DRAWING IS AN EXAMPLE OF HOW OVERALL CABINET IS TO BE DESIGNED. THE DRAWING WILL NEED TO BE REVISED BASED ON THE PUMP MANUFACTURER, SIZE AND NUMBER OF PUMPS. THINGS THAT WILL CHANGE ARE ENCLOSURE SIZE, CIRCUIT BREAKER SIZE, WIRE SIZE, VFD SIZE, AND OTHER ITEMS. REFER TO SPECIFICATIONS FOR FURTHER DETAILS.
3. VFDs SHALL BE RATED FOR CORROSIVE ENVIRONMENTS AND DRIVE CONTROL BOARDS SHALL BE CONFORMAL COATED TO PROTECT AGAINST CORROSION.
4. SEAL LEAK/OVERTEMP RELAYS MUST BE CHANGED AS REQUIRED BY PUMP MANUFACTURER.
5. TECHNICAL FIELD SERVICES, INC., JACKSONVILLE, FLORIDA (904) 278-5250
6. OBSERVE MINIMUM SPACE ALLOWANCE FOR PROPER VFD COOLING. REFER TO VFD MANUFACTURER'S GUIDE WHEN SIZING AND SELECTING VFD FOR SPECIFIC AIR FLOW AND SPACING REQUIREMENTS.
7. CAPACITOR KITS ARE NOT REQUIRED ON ALL STATIONS. REFER TO VFD MANUFACTURER'S GUIDE WHEN SIZING AND SELECTING VFD FOR SPECIFIC APPLICATION.
8. ENSURE GOOD ELECTRICAL CONTACT BETWEEN BACK PANEL AND ALL MECHANICAL GROUND CONNECTIONS.

NO.	BY	DATE	REVISIONS
6.			
5.			
4.			
3.			
2.			
1.			

ELECTRICAL SCHEMATIC
MANUFACTURER
ADDRESS1
ADDRESS2
CONTACT_NAME
CONTACT_NUMBER

JEA Building Community

DESIGNER:	
DRAWN BY:	
DATE:	
CHECKED BY:	
DATE:	
2021 STANDARD PACKAGE, REV. 1	

SHEET TITLE: BACK PANEL LAYOUT
PROJECT: --- PROJECT NAME ---
1-PH. TO 3-PH. VFD LIFT STATION DIAGRAM
JOB No: 12345678
SHEET 2 OF 10

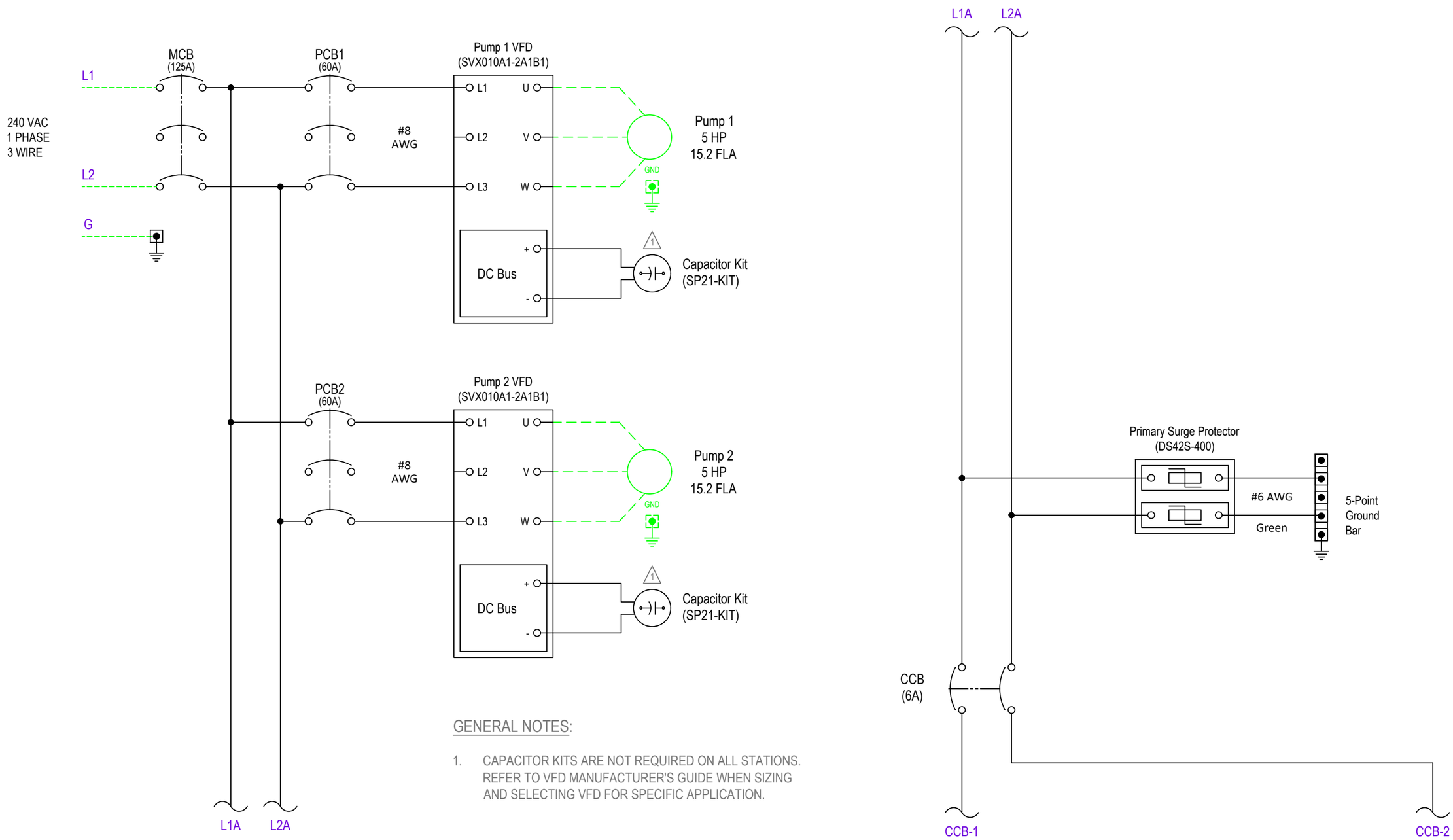

GENERAL NOTES:

1. CAPACITOR KITS ARE NOT REQUIRED ON ALL STATIONS. REFER TO VFD MANUFACTURER'S GUIDE WHEN SIZING AND SELECTING VFD FOR SPECIFIC APPLICATION.

NO.	BY	DATE	REVISIONS
6.			
5.			
4.			
3.			
2.			
1.			

ELECTRICAL SCHEMATIC

MANUFACTURER
ADDRESS1
ADDRESS2

CONTACT_NAME
CONTACT_NUMBER

JEA Building Community sm

DESIGNER:	
DRAWN BY:	
DATE:	
CHECKED BY:	
DATE:	
2021 STANDARD PACKAGE, REV. 1	

SHEET TITLE: 240 VAC VOLTAGE

PROJECT: --- PROJECT NAME ---

1-PH. TO 3-PH. VFD LIFT STATION DIAGRAM

JOB No: 12345678

SHEET 3 OF 10

GENERAL NOTES:

1. THIS DRAWING IS FOR 240VAC SERVICE. THE TAPS ON THE TRANSFORMER MUST BE CONNECTED FOR 240VAC.
2. RELAYS MUST BE CHANGED AS REQUIRED BY PUMP MANUFACTURER AND ADJUSTED TO RECOMMENDED SETTINGS.
3. ALL CONTROL WIRING AND 12-18 AWG SHALL BE STRANDED TIN-PLATED COPPER WIRE. APPLY DIELECTRIC GREASE TO ENDS TO PREVENT CORROSION.
4. ALL WIRES IN CONTROL PANEL SHALL BE TERMINATED WITH FERRULES.
5. ALL WIRES TERMINATING AT PLC RACK MUST BE ROUTED THROUGH WIREWAY FROM BELOW.
6. ALL ANALOG SIGNAL WIRING SHALL BE SHIELDED CABLE.
7. THIS DRAWING IS FOR A DUPLEX PUMP STATION. TRIPLEX PUMP STATIONS REQUIRE ADDITIONAL PUMP CONTROLS.

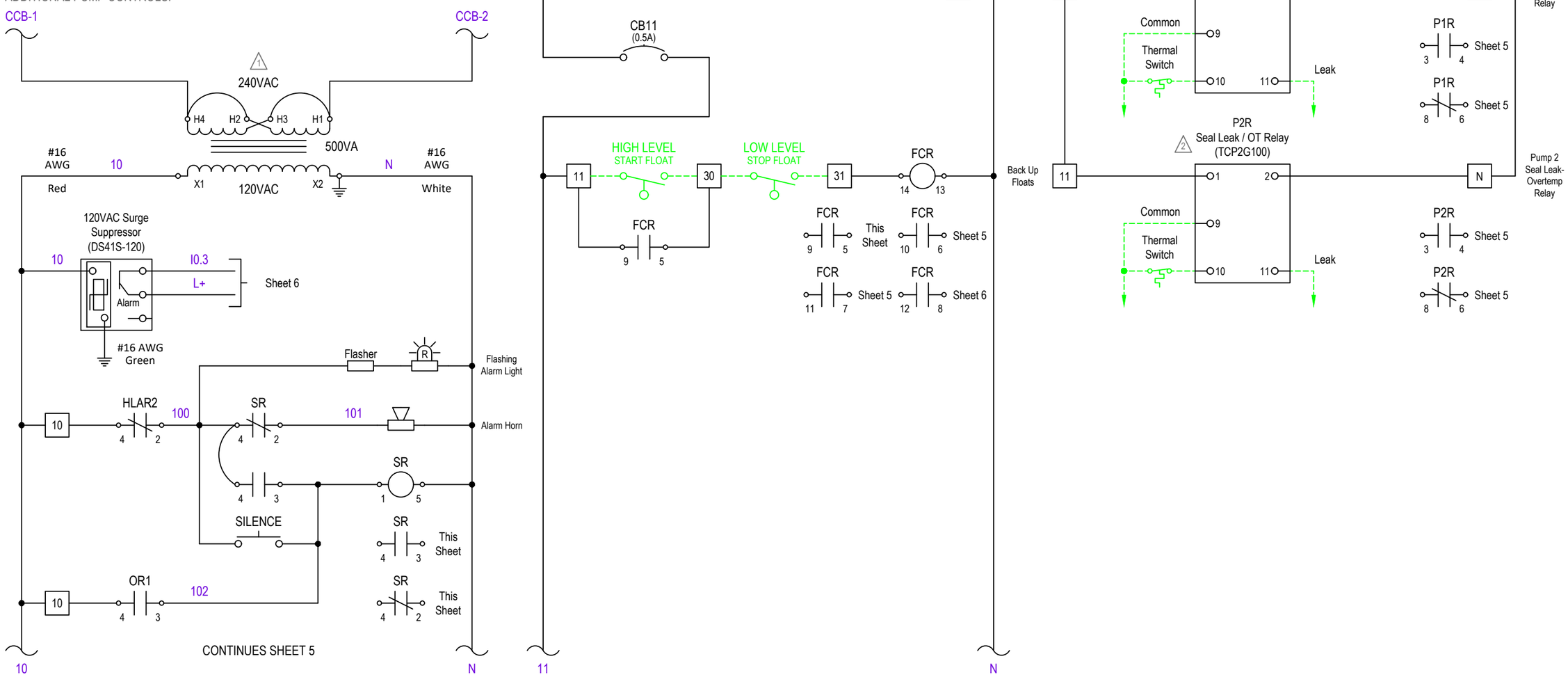

NO.	BY	DATE	REVISIONS
6.			
5.			
4.			
3.			
2.			
1.			

ELECTRICAL SCHEMATIC

MANUFACTURER
ADDRESS1
ADDRESS2

CONTACT_NAME
CONTACT_NUMBER

JEA Building Community sm

DESIGNER:
DRAWN BY:
DATE:
CHECKED BY:
DATE:
2021 STANDARD PACKAGE, REV. 1

SHEET TITLE: 120 VAC VOLTAGE
PROJECT: --- PROJECT NAME ---
1-PH. TO 3-PH. VFD LIFT STATION DIAGRAM
JOB No: 12345678
SHEET 4 OF 10

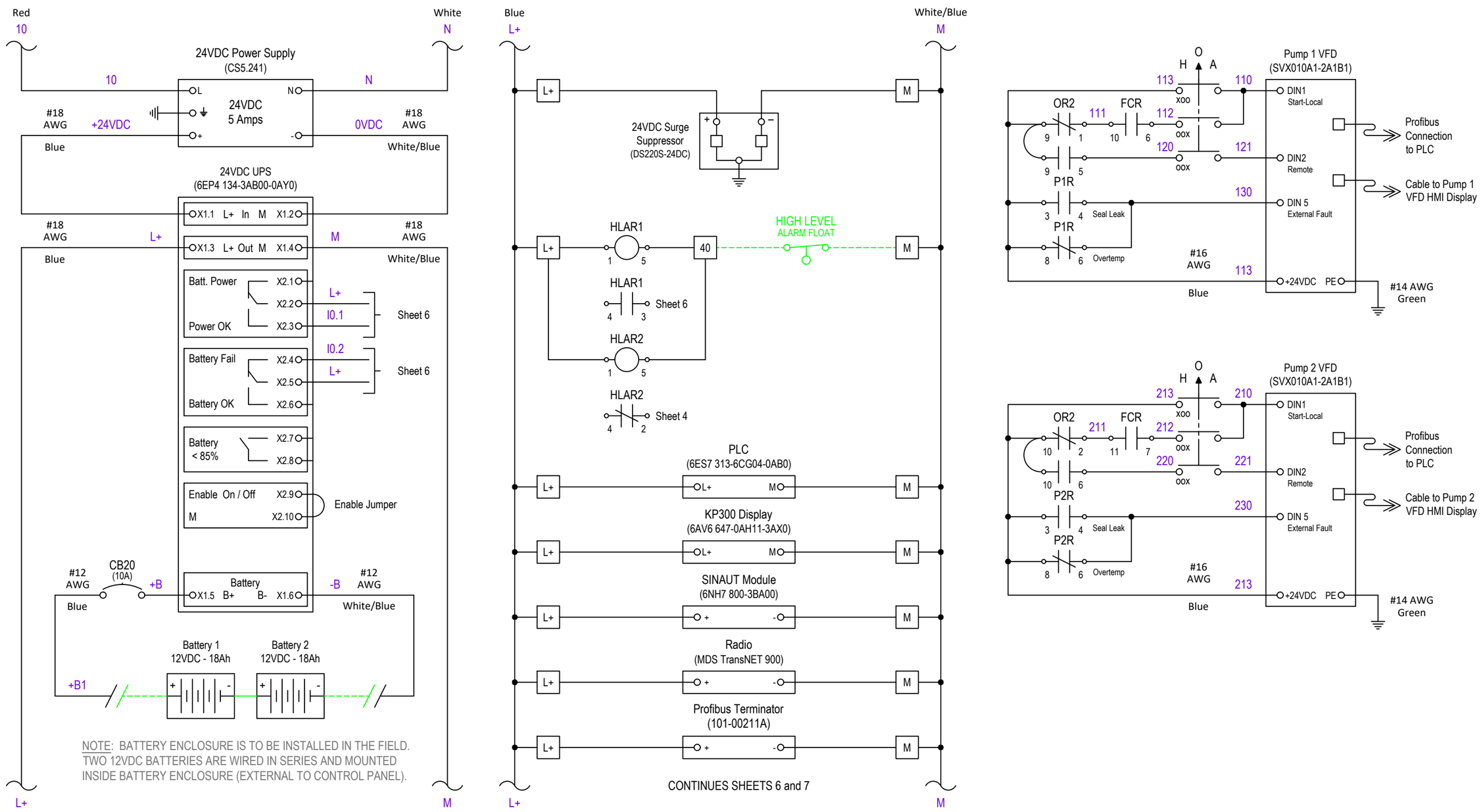

NO.	BY	DATE	REVISIONS
6.			
5.			
4.			
3.			
2.			
1.			

ELECTRICAL SCHEMATIC

MANUFACTURER
ADDRESS1
ADDRESS2

CONTACT_NAME
CONTACT_NUMBER

JEA Building Community sm

DESIGNER:	
DRAWN BY:	
DATE:	
CHECKED BY:	
DATE:	
2021 STANDARD PACKAGE, REV. 1	

SHEET TITLE: 24VDC VOLTAGE

PROJECT: --- PROJECT NAME ---

1-PH. TO 3-PH. VFD LIFT STATION DIAGRAM

JOB No: 12345678

SHEET 5 OF 10

RACK: 0 SLOT: 4

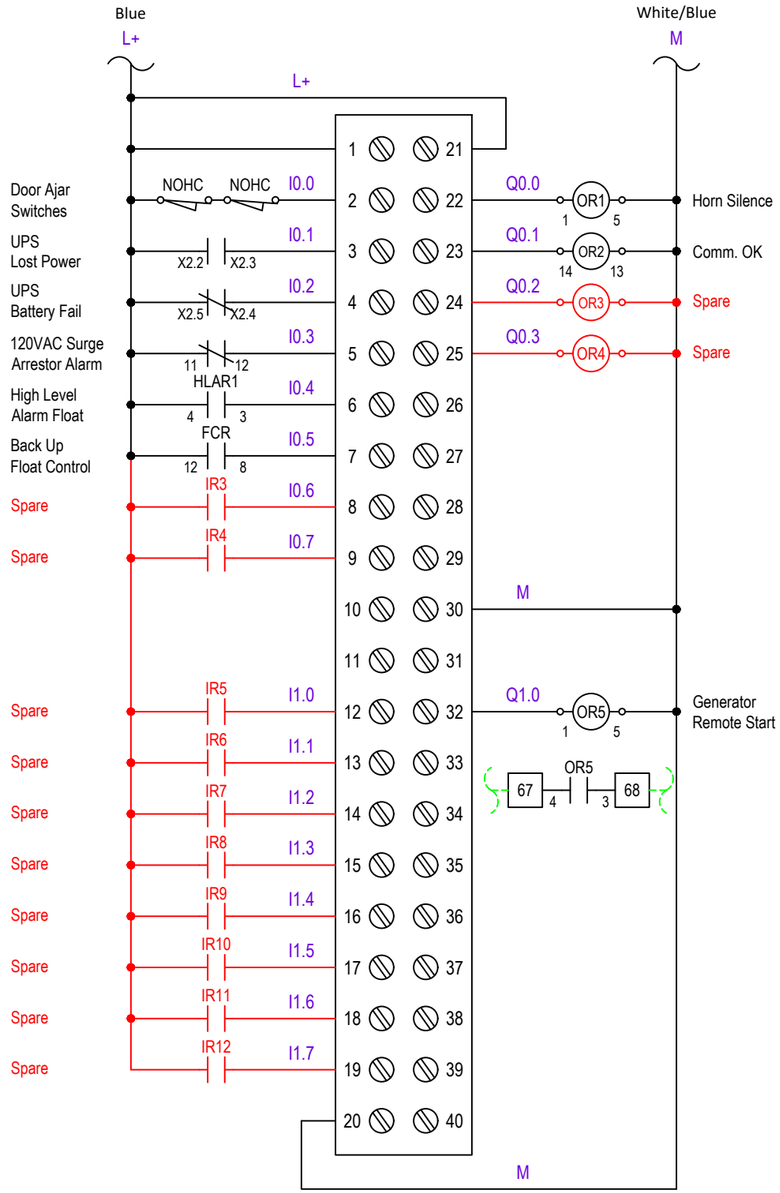

6ES7 313-6CG04-0AB0	
16 Digital Input - 16 Relay Out	
1	1L+ = +24V
2	Input 0.0
3	Input 0.1
4	Input 0.2
5	Input 0.3
6	Input 0.4
7	Input 0.5
8	Input 0.6
9	Input 0.7
10	
11	
12	Input 1.0
13	Input 1.1
14	Input 1.2
15	Input 1.3
16	Input 1.4
17	Input 1.5
18	Input 1.6
19	Input 1.7
20	1M = DC COM
21	2L+ = +24V
22	Output 0.0
23	Output 0.1
24	Output 0.2
25	Output 0.3
26	Output 0.4
27	Output 0.5
28	Output 0.6
29	Output 0.7
30	2M = DC COM
31	3L+ = +24V
32	Output 1.0
33	Output 1.1
34	Output 1.2
35	Output 1.3
36	Output 1.4
37	Output 1.5
38	Output 1.6
39	Output 1.7
40	3M = DC COM

RACK: - SLOT: -

NO.	BY	DATE	REVISIONS
6.			
5.			
4.			
3.			
2.			
1.			

ELECTRICAL SCHEMATIC

MANUFACTURER
ADDRESS1
ADDRESS2

CONTACT_NAME
CONTACT_NUMBER

JEA sm Building Community sm

DESIGNER:
DRAWN BY:
DATE:
CHECKED BY:
DATE:
2021 STANDARD PACKAGE, REV. 1

SHEET TITLE: PLC DIGITAL I/O

PROJECT: --- PROJECT NAME ---
1-PH. TO 3-PH. VFD LIFT STATION DIAGRAM

JOB No: 12345678

SHEET 6 OF 10

RACK: 0 SLOT: 5

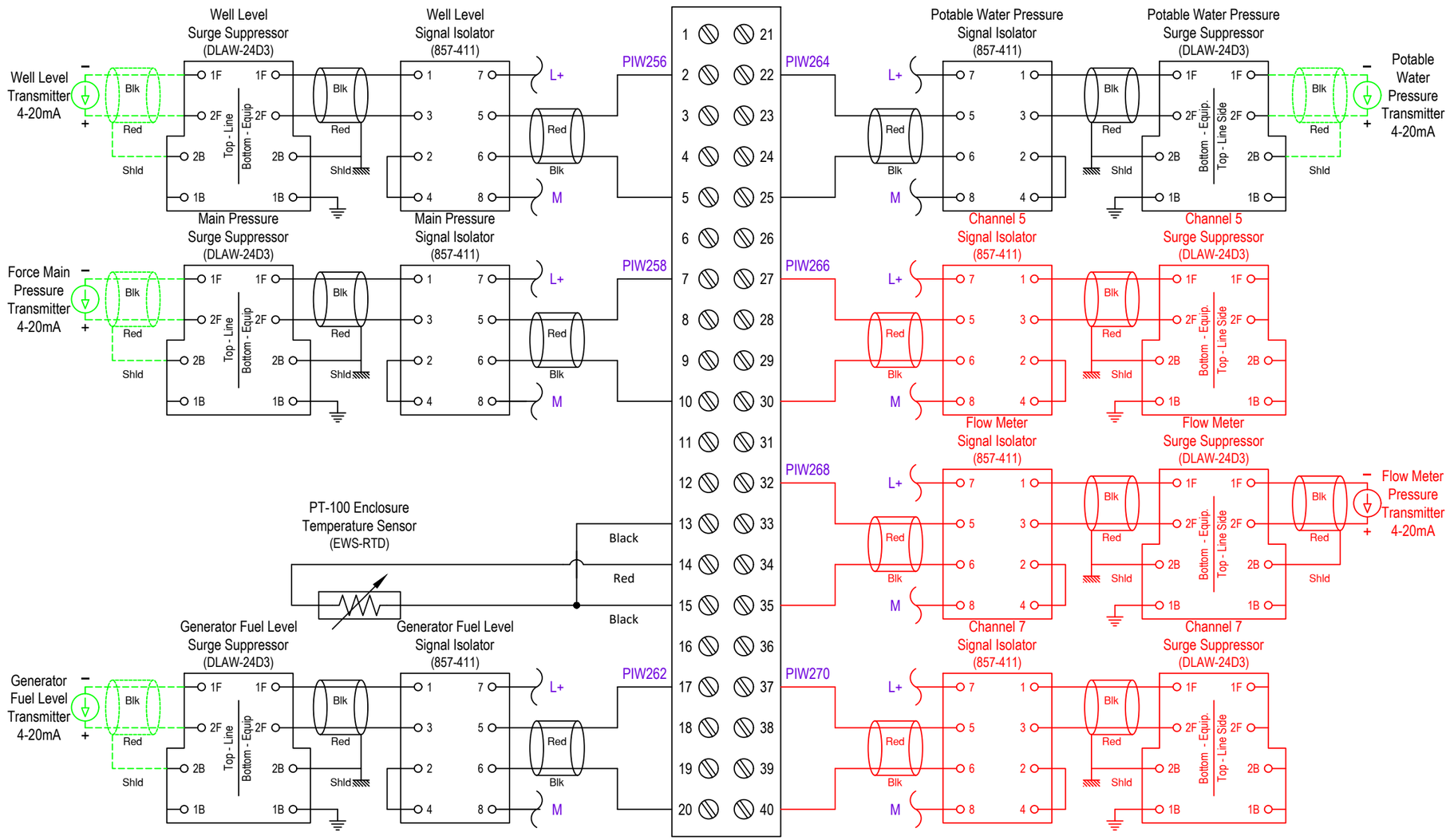

6ES7 331-1KF02-0AB0	
8 Input Analog	
1	U+ = > CH0 - PIW256
2	I +
3	S -
4	M +
5	M -
6	U+ = > CH1 - PIW258
7	I +
8	S -
9	M +
10	M -
11	U+ = > CH2 - PIW260
12	I +
13	S -
14	M +
15	M -
16	U+ = > CH3 - PIW262
17	I +
18	S -
19	M +
20	M -
21	U+ = > CH4 - PIW264
22	I +
23	S -
24	M +
25	M -
26	U+ = > CH5 - PIW266
27	I +
28	S -
29	M +
30	M -
31	U+ = > CH6 - PIW268
32	I +
33	S -
34	M +
35	M -
36	U+ = > CH7 - PIW270
37	I +
38	S -
39	M +
40	M -

NO.	BY	DATE	REVISIONS
6.			
5.			
4.			
3.			
2.			
1.			

ELECTRICAL SCHEMATIC

MANUFACTURER
ADDRESS1
ADDRESS2

CONTACT_NAME
CONTACT_NUMBER

JEA Building Community

DESIGNER:
DRAWN BY:
DATE:
CHECKED BY:
DATE:
2021 STANDARD PACKAGE, REV. 1

SHEET TITLE: PLC ANALOG INPUT

PROJECT: --- PROJECT NAME ---
1-PH. TO 3-PH. VFD LIFT STATION DIAGRAM

JOB No: 12345678

SHEET 7 OF 10

RACK: 0 SLOT: 6

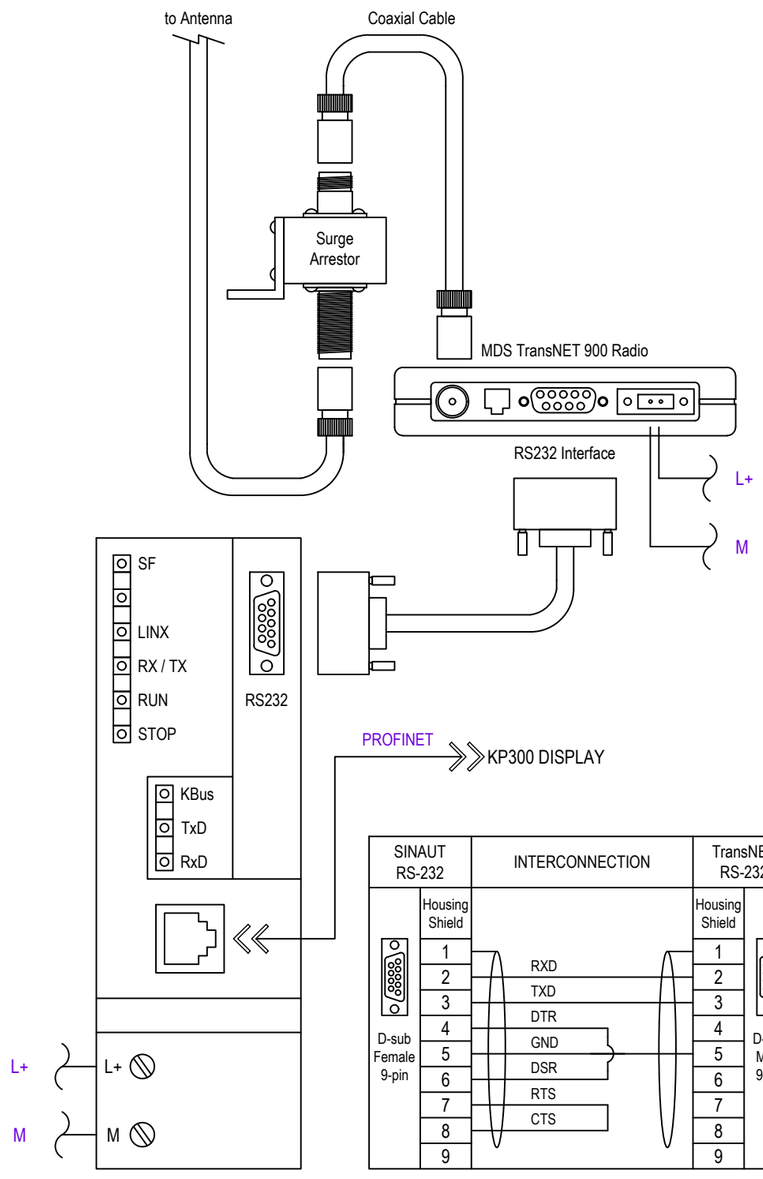

6NH7 800-3BA00	
SINAUT - > TIM3V-IE	
	RS-232 PIN OUT
1	DCD - Input
2	RXD - Input
3	TXD - Output
4	DTR - Output
5	GND
6	--
7	RTS - Output
8	CTS - Input
	RJ-45 PIN OUT
1	TXD+ - > Output
2	TXD- - > Output
3	RXD+ - > Input
4	--
5	--
6	RXD- - > Input
7	--
8	--
	Power Connector
L+	+ 24VDC
M	DC Common

VFD Functional

- OFF - Drive is disabled.
- MANUAL - The drive will be forced to Local control and will be given a start signal to ramp it up to maximum speed.
- AUTO - If the VFD selector switch is put into Auto and Communication OK relay is good then the drive will be controlled over Profibus using PPO4. If the PLC communication is ever lost to the VFD, the communication OK relay will drop out and control the VFD from the Float Control Relay. The communication OK relay is controlled by the PLC and is to be energized as long as the VFD communication is OK.

Setting up Cutler-Hammer SVX9000 on Profibus with Backup Float Revised 6/7/13

- Contact JEA for the latest documentation.

Profibus Connection Diagram

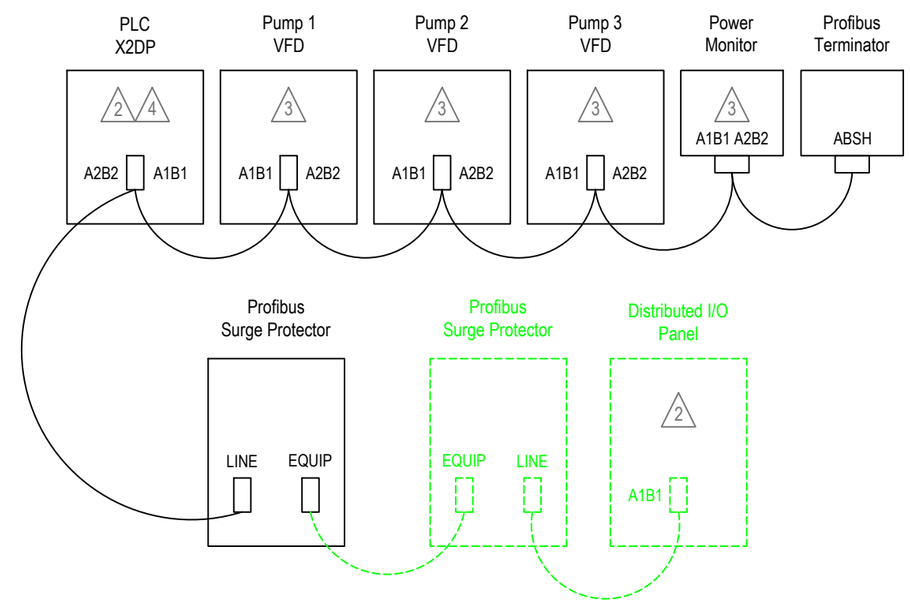

GENERAL NOTES:

1. ALL PLC I/O WIRING SHALL BE #18 AWG. APPLY DIELECTRIC GREASE TO ENDS TO PREVENT CORROSION.
2. SET PROFIBUS CONNECTOR RESISTOR SWITCH TO THE "ON" POSITION.
3. SET PROFIBUS CONNECTOR RESISTOR SWITCH TO THE "OFF" POSITION.
4. SET PROFIBUS CONNECTOR RESISTOR SWITCH TO THE "OFF" POSITION IF A DISTRIBUTED I/O PANEL IS PRESENT.

NO.	BY	DATE	REVISIONS
6.			
5.			
4.			
3.			
2.			
1.			

ELECTRICAL SCHEMATIC

MANUFACTURER
ADDRESS1
ADDRESS2

CONTACT_NAME
CONTACT_NUMBER

JEA Building Community

DESIGNER:
DRAWN BY:
DATE:
CHECKED BY:
DATE:
2021 STANDARD PACKAGE, REV. 1

SHEET TITLE: PLC & RADIO CONNECTION
PROJECT: --- PROJECT NAME ---
1-PH. TO 3-PH. VFD LIFT STATION DIAGRAM
JOB No: 12345678
SHEET 8 OF 10

GENERAL NOTES:

1. ALL TERMINALS, RELAYS, BREAKERS, SURGE SUPPRESSORS, AND OTHER DEVICES MUST BE LABELED.
2. INSTALL PLUGGABLE JUMPERS (Y) ON TERMINALS WHERE INDICATED. APPLY DIELECTRIC GREASE TO JUMPERS TO PREVENT CORROSION.
3. RELAYS MUST BE CHANGED AS REQUIRED BY PUMP MANUFACTURER AND ADJUSTED TO RECOMMENDED SETTINGS.
4. ALL WIRES IN CONTROL PANEL SHALL BE TERMINATED WITH FERRULES.

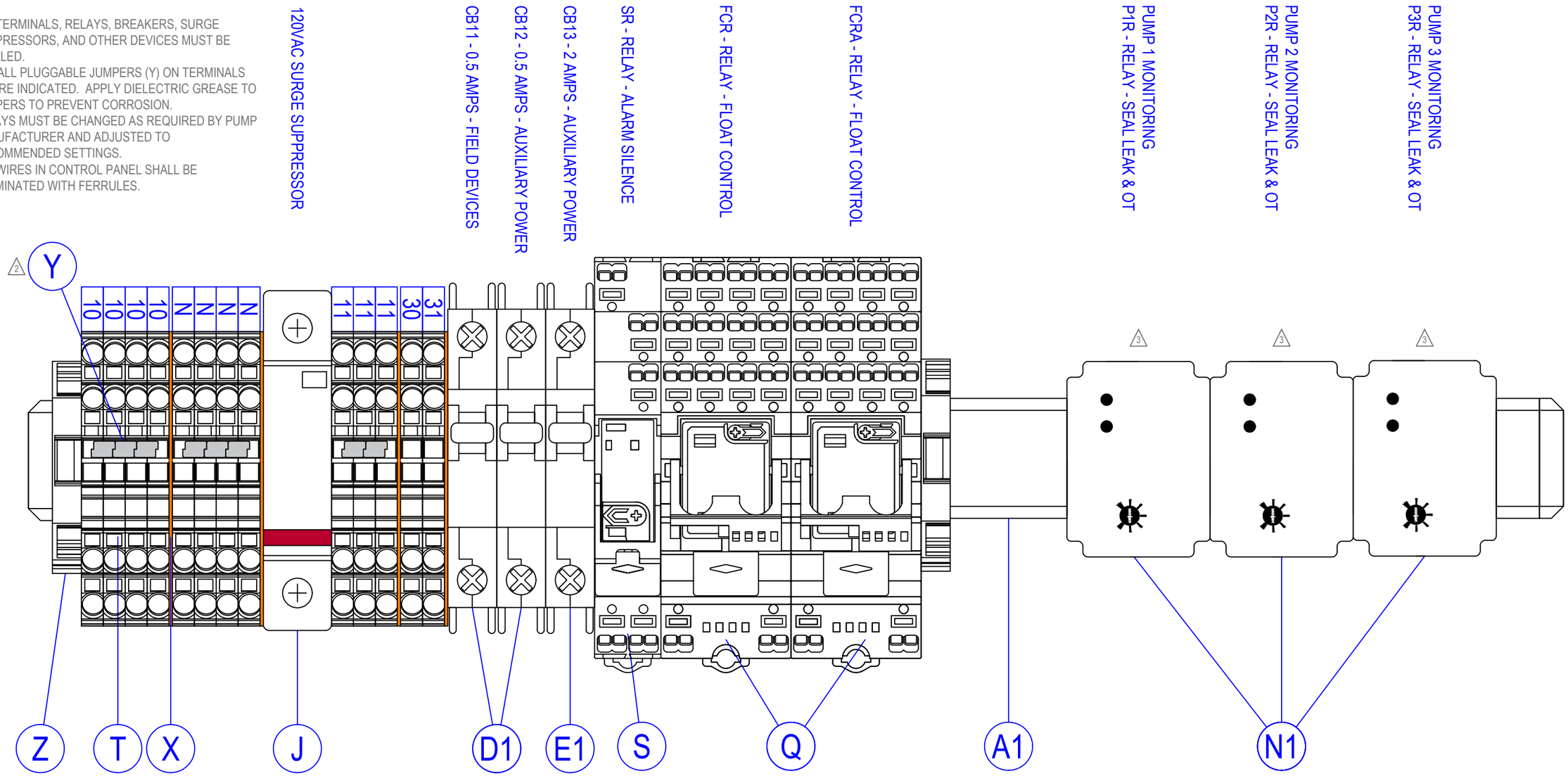

NO.	BY	DATE	REVISIONS
6.			
5.			
4.			
3.			
2.			
1.			

ELECTRICAL SCHEMATIC

MANUFACTURER
ADDRESS1
ADDRESS2

CONTACT_NAME
CONTACT_NUMBER

JEA Building Community sm

DESIGNER:	
DRAWN BY:	
DATE:	
CHECKED BY:	
DATE:	
2021 STANDARD PACKAGE, REV. 1	

SHEET TITLE: 120 VAC TERMINAL BLOCK LAYOUT

PROJECT: --- PROJECT NAME ---

1-PH. TO 3-PH. VFD LIFT STATION DIAGRAM

JOB No: 12345678

SHEET 9 OF 10

GENERAL NOTES:

1. ALL TERMINALS, RELAYS, SURGE SUPPRESSORS, BREAKERS, AND OTHER DEVICES MUST BE LABELED.
2. INSTALL PLUGGABLE JUMPERS (Y) ON TERMINALS WHERE INDICATED. APPLY DIELECTRIC GREASE TO JUMPERS TO PREVENT CORROSION.
3. ALL WIRES IN CONTROL PANEL SHALL BE TERMINATED WITH FERRULES.

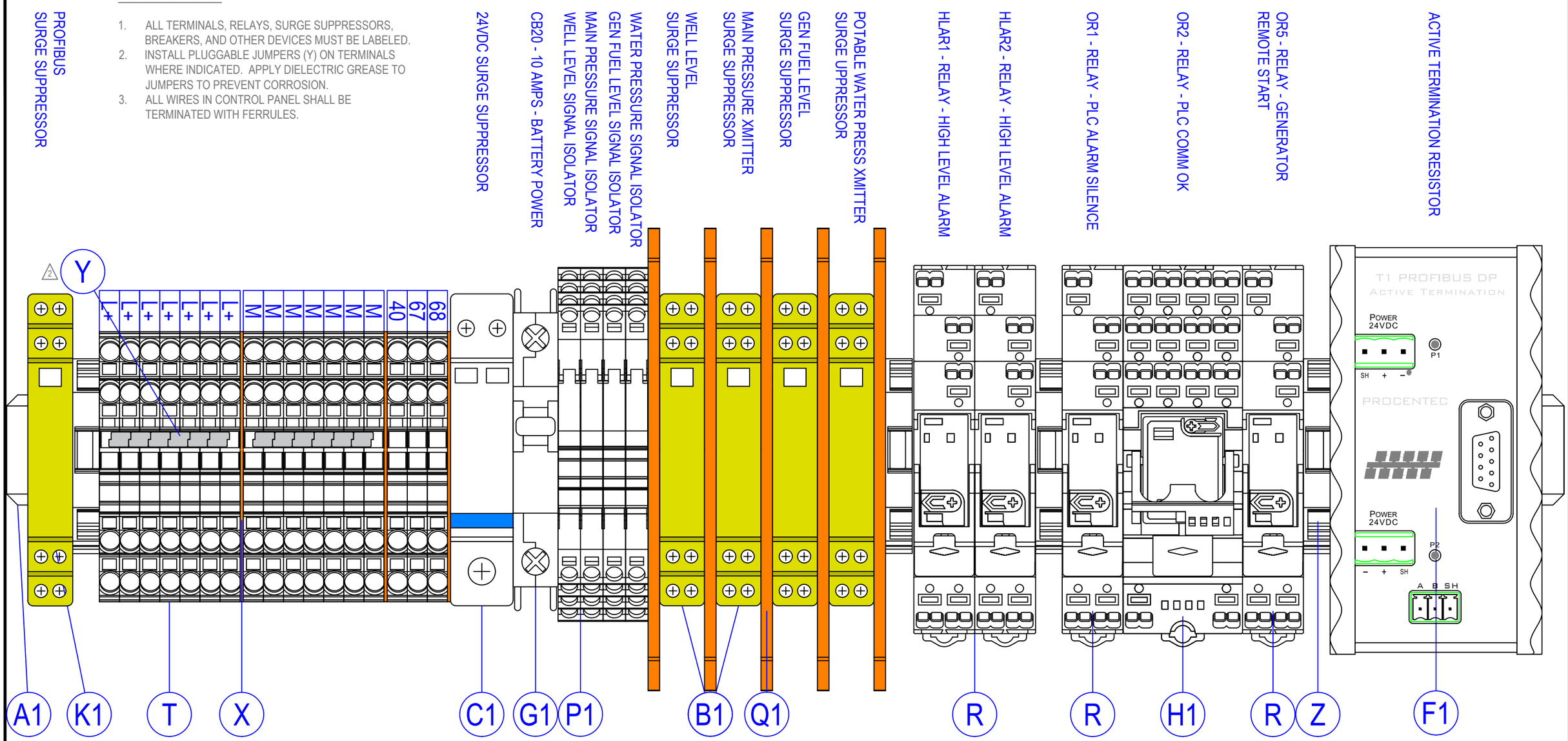

NO.	BY	DATE	REVISIONS
6.			
5.			
4.			
3.			
2.			
1.			

ELECTRICAL SCHEMATIC

MANUFACTURER
ADDRESS1
ADDRESS2

CONTACT_NAME
CONTACT_NUMBER

JEA sm
Building Community sm

DESIGNER:
DRAWN BY:
DATE:
CHECKED BY:
DATE:
2021 STANDARD PACKAGE, REV. 1

SHEET TITLE: 24 VDC TERMINAL BLOCK LAYOUT

PROJECT: --- PROJECT NAME ---
1-PH. TO 3-PH. VFD LIFT STATION DIAGRAM

JOB No: 12345678

SHEET 10 OF 10

INSTRUCTIONS:

1. CONTRACTOR SHALL USE THIS DRAWING FILE TO CREATE SHOP DRAWINGS FOR JEA REVIEW.
2. RETURN COMPLETED SHOP DRAWINGS AS PDF FILE TO ARISS FAJARDO AT FAJAAJ@JEA.COM FOR APPROVAL.
3. PLEASE CONTACT ARISS FAJARDO FOR QUESTIONS OR ADDITIONAL INFORMATION.
4. DO NOT PRINT THIS SHEET IN SUBMITAL SET.

NO.	BY	DATE	REVISIONS
6.			
5.			
4.			
3.			
2.			
1.	AJF	12/13/19	INITIAL REVISION

ELECTRICAL SCHEMATIC

MANUFACTURER
ADDRESS1
ADDRESS2

CONTACT_NAME
CONTACT_NUMBER

JEA Building Community sm

DESIGNER:
DRAWN BY:
DATE:
CHECKED BY:
DATE:
2021 STANDARD PACKAGE, REV. 1

SHEET TITLE: INSTRUCTION SHEET

PROJECT: --- PROJECT NAME ---
3-PHASE VFD LIFT STATION DIAGRAM

JOB No: 12345678

SHEET 0 OF 10

FRONT VIEW

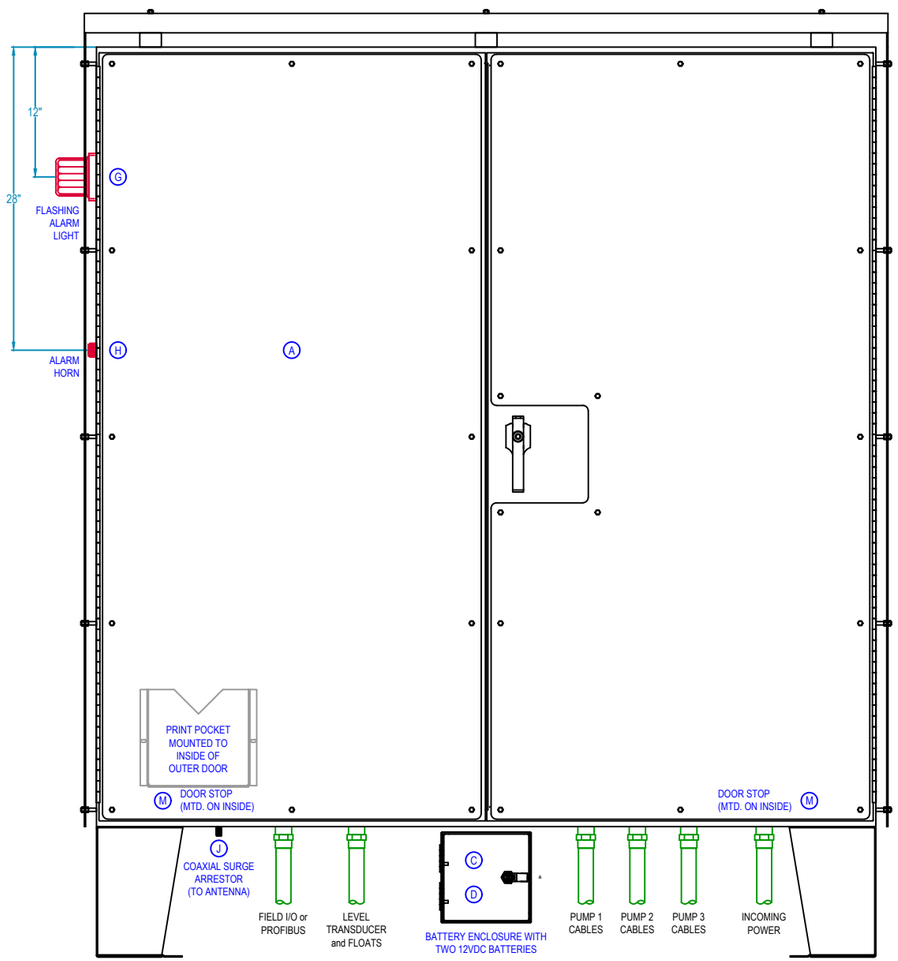

BILL of MATERIAL

	QTY	MANUFACTURER	PART NUMBER	DESCRIPTION
2 A	1	OEM	CUSTOM ENCLOSURE	SEE THIS SHEET FOR DETAILS
2 B	2	OEM	CUSTOM INNER DOORS	SEE THIS SHEET FOR DETAILS
C	1	SCHAEFER	SPN1AL-888-JEA	BATTERY ENCLOSURE, .125 ALUMINUM
D	2	POWER SONIC	PS-12180 F2	BATTERY, LEAD-ACID, 12VDC, 18Ah
E	--	--	--	--
F	1	SIEMENS	52PX8A1K / 52BAK	MOMENTARY PUSHBUTTON, 30mm, FLUSH
G	1	INGRAM PRODUCTS	LX40F	ALARM LIGHT W/ FLASHER, 120VAC, RED
H	1	INGRAM PRODUCTS	PW120AR	ALARM HORN, ELECTRONIC, 120VAC, RED
5 I	1	APT	S50A277V3Y	SURGE PROTECTOR, 480V WYE
J	1	TIMES-PROTECT	LP-STR-NFF	COAXIAL SURGE ARRESTOR (ANTENNA)
K	1	SIEMENS	6AV6 647-0AH11-3AX0	OPERATOR PANEL KP300 DISPLAY
L	2	OMRON	6X283	SNAP ACTION SWITCH (DOOR AJAR)
	2	ALLIED	642-2137	ACTUATOR FOR SWITCH
M	4	SCHAEFER	SP-DSTOPK-SS-SW	INNER/OUTER DOOR STOP KIT, SS
N	--	--	--	--
O	3	CUTLER-HAMMER	OPTRMT-9000-KIT	VFD HMI DISPLAY
P	3	SIEMENS	52SX2BAB	3 POSITION MAINTAINED SWITCH, 30mm
	12	SIEMENS	52BJK	CONTACT BLOCK, 1NO-1NC
Q	1	SIEMENS	7KM4 211-1BA00-3AA0	PAC-4200 POWER MONITOR, 3 PHASE
	1	SIEMENS	7KM9 300-0AB00-0AA0	PROFIBUS EXPANSION MODULE

DRAWING LAYER COLOR LEGEND:

GREY - NOTES
BLACK - ELECTRICAL SCHEMATIC WIRING DIAGRAMS AND DEVICES
BLUE - PART IDENTIFICATION
PURPLE - WIRE NUMBERS
GREEN - FIELD DEVICES AND WIRING OUTSIDE ENCLOSURE (DASHED)
RED - FUTURE DEVICES AND WIRING
TEAL - DIMENSIONS

INNER DOOR VIEW

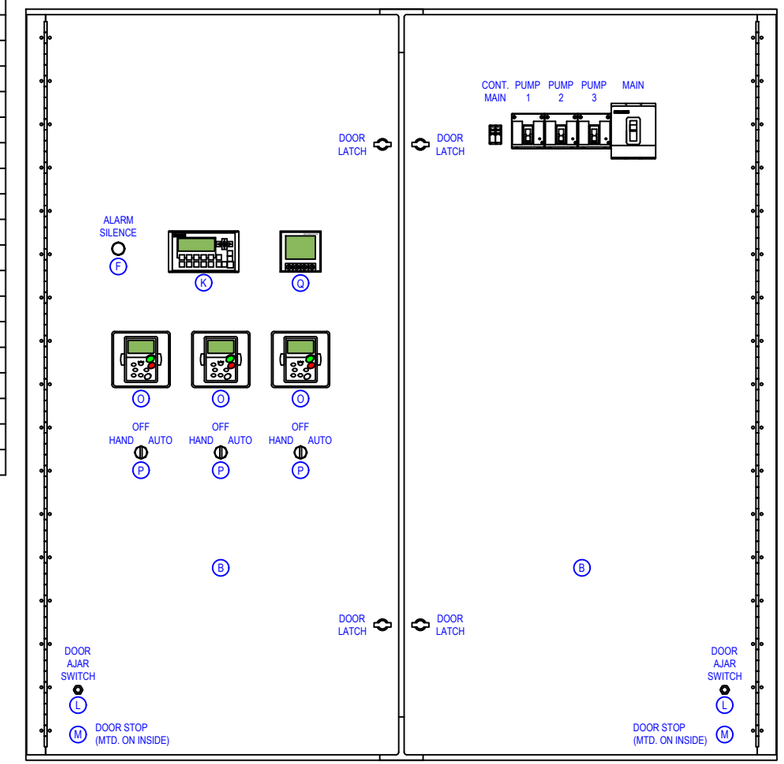

HINGED INNER DOORS:
FABRICATED FROM .125 ALUMINUM WITH CONTINUOUS HINGE, TWIST LATCHES, AND DOOR STOP MOUNTED ON INSIDE OF EACH.

I

CUSTOM ENCLOSURE:
NEMA 12/3R RATED, FABRICATED FROM TYPE 316 STAINLESS STEEL WITH WHITE POLYESTER POWDER COAT FINISH INSIDE AND OUT. OUTER DOORS ARE FITTED WITH A PADLOCKABLE 3-POINT LATCH AND DOOR STOPS. ENCLOSURE IS MOUNTED ON 12-INCH TYPE 316 STAINLESS STEEL LEGS.

HEAT SHIELDS FABRICATED FROM .125 MARINE GRADE ALUMINUM SHALL BE INSTALLED ON FRONT, BACK, TOP, AND SIDES. HOLES SHALL BE CUT IN SHIELD FOR ALARM LIGHT AND HORN. HEAT SHIELDS SHALL ALSO HAVE WHITE POLYESTER POWDER COAT FINISH ON ALL SIDES.

REFER TO ENCLOSURE SPECIFICATIONS FOR FURTHER DETAILS.

NOTE: BATTERY ENCLOSURE IS TO BE INSTALLED IN THE FIELD

CONTROL WIRE UL508A COLOR:

RED - 120 VAC
WHITE - NEUTRAL
BLUE - +24 VDC
WHITE / BLUE STRIPE - 0 VDC

GENERAL NOTES:

1. REFER TO "433 LIFT STATION SCADA CONTROLS SPECIFICATION" FOR FURTHER DETAILS THAT MUST BE ADHERED TO SUCH AS WIRE, CONTACTOR, AND CIRCUIT BREAKER SIZING.
2. THIS DRAWING IS AN EXAMPLE OF HOW OVERALL CABINET IS TO BE DESIGNED. THE DRAWING WILL NEED TO BE REVISED BASED ON THE PUMP MANUFACTURER, SIZE AND NUMBER OF PUMPS. THINGS THAT WILL CHANGE ARE ENCLOSURE SIZE, CIRCUIT BREAKER SIZE, WIRE SIZE, VFD SIZE, AND OTHER ITEMS. REFER TO SPECIFICATIONS FOR FURTHER DETAILS.
3. VFD ENCLOSURES LOCATED OUTSIDE SHALL BE NEMA 12/3R WITH THE VFD HEAT SINKS VENTED OUT THE BACK. REFER TO DRAWINGS FOR FURTHER DETAILS.
4. REFER TO NOTES AND DETAILS ON ALL DRAWING SHEETS FOR MORE MANUFACTURING DETAILS.
5. THE SURGE PROTECTION DEVICE (SPD) IS TO BE SHIPPED LOOSE FOR MOUNTING AT THE DISCONNECT IN THE FIELD. THE CORRECT SPD MUST BE SELECTED BASED ON THE SERVICE VOLTAGE: 480V WYE.
6. ALL FIELD WIRING SHALL BE #12 AWG STRANDED, TIN-PLATED COPPER. APPLY DIELECTRIC GREASE TO ENDS TO PREVENT CORROSION.
7. ALL PLC I/O WIRING INTERNAL TO THE CONTROL PANEL SHALL BE #18 AWG.
8. ALL WIRES IN CONTROL PANEL SHALL BE TERMINATED WITH FERRULES.
9. ALL MOUNTING SCREWS SHALL BE STAINLESS STEEL, DRILLED AND TAPPED (NO SELF-TAPPING SCREWS ARE ALLOWED).

NO.	BY	DATE	REVISIONS
6.			
5.			
4.			
3.			
2.			
1.			

ELECTRICAL SCHEMATIC

MANUFACTURER
ADDRESS1
ADDRESS2

CONTACT_NAME
CONTACT_NUMBER

JEA Building Community

DESIGNER:
DRAWN BY:
DATE:
CHECKED BY:
DATE:
2021 STANDARD PACKAGE, REV. 1

SHEET TITLE: FRONT PANEL VIEW
PROJECT: --- PROJECT NAME ---
3-PHASE VFD LIFT STATION DIAGRAM
JOB No: 12345678
SHEET 1 OF 10

BACK PANEL LAYOUT

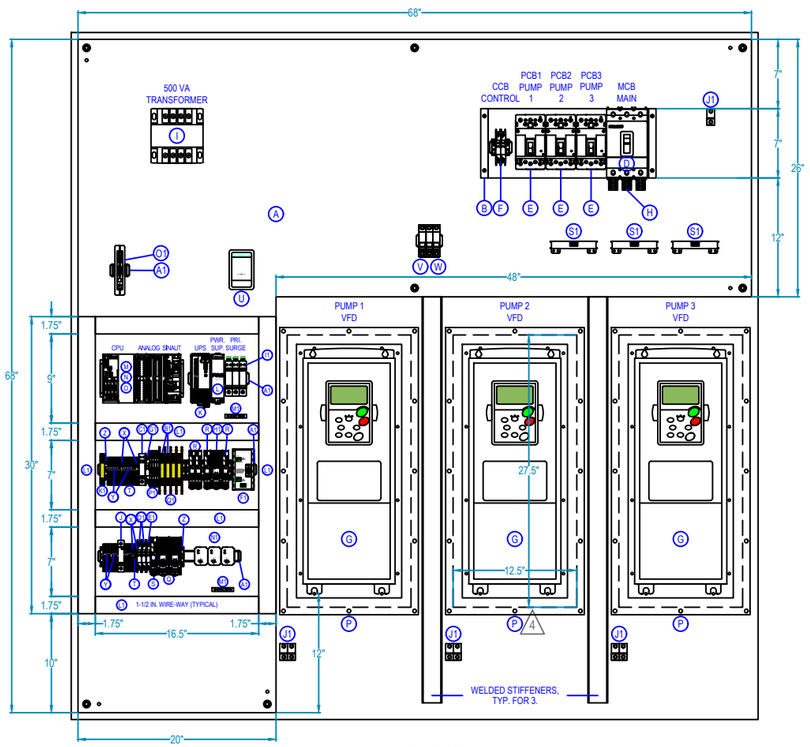

BACK PANEL:
CUSTOM "L" SHAPED, FABRICATED FROM 10ga. CARBON STEEL WITH WHITE INDUSTRIAL GRADE ENAMEL FINISH.

RIGHT SIDE VIEW

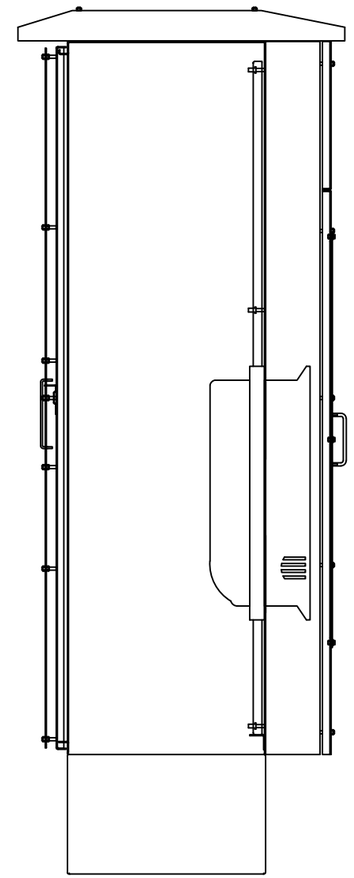

Installation of Flange Mount VFDs:

Provide cut-outs in the back of the enclosure to accept VFD aluminum mounting plates. Mounting plates shall be attached to studs on the back of the enclosure and gasketed.

VFDs are to be bolted to these plates with the heat sinks extending outside the enclosure for cooling.

Consult VFD manufacturer's installation guide for flange mount cut-out dimensions and recommended instructions. See General Note #4 for additional details and requirements. Dimensions of cut-out must be shown on drawing.

The rear sunshield shall have a removable cover with handles to allow access to the VFD heat sinks for cleaning and maintenance. The heat shield will have studs with wing nuts for attaching the removable cover.

Seal all penetrations.

BILL of MATERIAL

	QTY	MANUFACTURER	PART NUMBER	DESCRIPTION
2 A	1	OEM	CUSTOM BACK PANEL	SEE THIS SHEET FOR DETAILS
2 B	1	OEM	BREAKER MOUNT	TO RAISE CBs FLUSH WITH INNER DOOR
C	--	--	--	--
2 D	1	SIEMENS	NFG3B200L	MCB, 3 POLE, 200A
2 E	3	SIEMENS	NEG3B100L	PCB1 and PCB2, 3 POLE, 100A
F	1	WEIDMULLER	9926 25 2003	CCB, UL489, 2 POLE, 3A (480V SERVICE)
5 2 G	3	CUTLER-HAMMER	SVX040A1-4A1N2	VFD, VARIABLE TORQUE, 50HP
2 G	3	CUTLER-HAMMER	OPTTHR7	VFD FLANGE MOUNTING KIT, FRAME 7
G	3	CUTLER-HAMMER	OPTC5	VFD PROFIBUS DP, DB9 CONNECTOR
2 H	1	SIEMENS	3TA6FG04	POWER DISTRIBUTION LUGS, KIT OF 3
I	1	SIEMENS	MT0500A	CONTROL TRANSFORMER, 500VA
J	1	CITEL	DS41S-120	120VAC SURGE SUPPRESSOR, BASE
K	1	SIEMENS	6EP4 134-3AB00-0AY0	SITOP DC UPS, 10A WITH CHARGER
L	1	PULS	CS5.241	24VDC POWER SUPPLY, 5A
M	1	SIEMENS	6ES7 390-1AE80-0AA0	480mm MOUNTING RAIL FOR PLC EQUIP.
M	1	SIEMENS	6ES7 313-6CG04-0AB0	CPU 313C-2DP, 16 DI - 16 DO PLC
M	1	SIEMENS	6ES7 953-8LG30-0AA0	MMC MEMORY CARD, 128KB
M	1	SIEMENS	6ES7 331-1KF02-0AB0	8 FUNCTION ANALOG INPUT MODULE
M	2	SIEMENS	6ES7 392-1BM01-0AA0	40-PIN SPRING CONNECTOR
M	1	SIEMENS	6NH7 800-3BA00	SINAUT ST7, TIM 3V-IE MODULE
N	2	BRAD HARRISON	PA9D01-42	PROFIBUS CONNECTOR, 90°, PG PORT
O	3	BRAD HARRISON	MA9D00-42	PROFIBUS CONNECTOR, 180°
4 P	3	OEM	VFD MOUNTING PLATE	SEE THIS SHEET FOR DETAILS
Q	2	FINDER	58P481205060	RELAY, STATUS, SPRING, 4NO-NC, 120VAC
R	4	FINDER	4CP190245050	RELAY, STATUS, SPRING, SPDT, 24VDC
S	1	FINDER	4CP181205060	RELAY, STATUS, SPRING, SPDT, 120VAC
T	30	WAGO	2002-1401	TERMINAL, 2002, SPRING, GRAY
U	1	OMEGA	EWS-RTD	PT100 TEMPERATURE SENSOR, RTD
V	1	WAGO	811-430	3-POLE CLASS CC FUSE HOLDER
W	3	BUSSMANN	FNQ-R-1	FUSE, CLASS CC REJECTION, 600V, 1A
X	7	WAGO	2002-1492	TERMINAL END / PART. PLATE, ORANGE
Y	20	WAGO	2002-400	ADJACENT JUMPER, 2-WAY CONTINUOUS
Z	10	WAGO	249-116	TERMINAL END STOP, GRAY
A1	1	WAGO	210-112	2M DIN RAIL, GALVANIZED, SLOTTED
B1	4	CITEL	DLAW-24D3	ANALOG SURGE SUPPRESSOR, 24VDC
C1	1	CITEL	DS220S-24DC	24VDC SURGE SUPPRESSOR
D1	2	WEIDMULLER	9926 25 1000	CB11 and CB12, UL489, 1 POLE, 0.5A
E1	1	WEIDMULLER	9926 25 1002	CB13, UL489, 1 POLE, 2A
F1	1	PROCENTEC	101-00211A	PROFIBUS TERMINATOR
G1	1	WEIDMULLER	9926 25 1910	CB20, UL489, 1 POLE, 10A
H1	1	FINDER	58P490245050	RELAY, STATUS, SPRING, 4NO-NC, 24VDC
I1	1	CITEL	DS43S-480	PRIMARY SPD, TYPE 1, 480V WYE
J1	7	PANDUIT	LAMA2-14-QY	GROUND LUG, DUAL-RATED, #2-14AWG
K1	1	CITEL	DLA-12D3	PROFIBUS SURGE PROTECTOR
L1	2	PANDUIT	1.5"W x 3"H x 72"L	WIREWAY, HINGE COVER, WIDE FINGER
M1	2	SQUARE D	PK5GTA	EQUIPMENT GROUND BAR, 5-POINT
7 N1	3	MACROMATIC	TCP2G100	SEAL LEAK / OVERTEMP RELAY, 120VAC
O1	1	MDS	TRANSNET 900	RADIO, SPREAD-SPECTRUM, UNLICENSED
8 O1	1	MDS	03-4124A01	DIN RAIL MOUNT KIT
O1	1	TFS, INC.	--	SINAUT TO RADIO NULL CABLE
P1	4	WAGO	857-411	ANALOG SIGNAL ISOLATOR
Q1	5	WAGO	209-191	SEPARATOR, ORANGE
R1	1	SIEMENS	6XV1830-0EH10	PROFIBUS CABLE, FAST CONNECT TYPE
2 S1	3	SIEMENS	PDS-CTSC-021	CURRENT XFMR, 200:5 RATIO, SPLIT CORE
T1	2	SIEMENS	6GK1901-1BB10-2AA0	PROFINET CONNECTOR, SIPLUS
U1	1	SIEMENS	6XV1840-2AH10	PROFINET CABLE, FAST CONNECT

GENERAL NOTES:

1. REFER TO "433 LIFT STATION SCADA CONTROLS SPECIFICATION" FOR FURTHER DETAILS THAT MUST BE ADHERED TO SUCH AS WIRE, CONTACTOR, AND CIRCUIT BREAKER SIZING.
2. THIS DRAWING IS AN EXAMPLE OF HOW OVERALL CABINET IS TO BE DESIGNED. THE DRAWING WILL NEED TO BE REVISED BASED ON THE PUMP MANUFACTURER, SIZE AND NUMBER OF PUMPS. THINGS THAT WILL CHANGE ARE ENCLOSURE SIZE, CIRCUIT BREAKER SIZE, WIRE SIZE, VFD SIZE, AND OTHER ITEMS. REFER TO SPECIFICATIONS FOR FURTHER DETAILS.
3. REFER TO "433 LIFT STATION SCADA CONTROLS SPECIFICATION" HEAT LOAD CALCULATIONS SECTION AND ENCLOSURE SPECIFICATIONS TO SIZE ENCLOSURE CORRECTLY.
4. VFDs SHALL BE BOLTED TO A REMOVABLE PLATE THAT WILL THEN BE CONNECTED TO THE BACK OF THE ENCLOSURE WITH A GASKET. THE BACK OF THE ENCLOSURE SHALL HAVE STUDS TO ATTACH THE PLATE TO. THIS PLATE IS TO BE ADEQUATELY DESIGNED TO SUPPORT THE VFD. ENCLOSURE CUTOUT SHALL BE SIZED A MINIMUM OF 2.75" WIDER AND 3.5" HIGHER ON EACH SIDE OF THE MANUFACTURER RECOMMENDED CUTOUT FOR 40HP VFDs. THIS WILL RESULT IN A CUTOUT THAT IS NO LESS THAN 5.5" WIDER AND 7" HIGHER THAN THE MANUFACTURER'S SPECIFICATION. ADDITIONALLY THIS DISTANCE WILL INCREASE PROPORTIONATELY WITH THE SIZE OF THE VFD. FOR EXAMPLE: 80HP VFDs REQUIRE A CUTOUT THAT IS 5.5" WIDER AND 7.0" HIGHER ON EACH SIDE (A TOTAL OF 11" WIDER AND 14" HIGHER) OF THE MANUFACTURER SPECIFIED CUTOUT. THIS REQUIREMENT IS TO ENSURE THAT A FUTURE REPLACEMENT OF A VFD WILL ALLOW FOR DIFFERENT VFD DIMENSIONS.
5. VFDs SHALL BE RATED FOR CORROSIVE ENVIRONMENTS AND DRIVE CONTROL BOARDS SHALL BE CONFORMAL COATED TO PROTECT AGAINST CORROSION.
6. THE REAR SUNSHIELD SHALL HAVE A REMOVABLE COVER WITH HANDLES TO ALLOW ACCESS TO THE VFD HEAT SINKS FOR CLEANING AND MAINTENANCE. THE HEAT SHIELD WILL HAVE STUDS WITH WING NUTS FOR ATTACHING THE REMOVABLE COVER.
7. SEAL LEAK/OVERTEMP RELAYS MUST BE CHANGED AS REQUIRED BY PUMP MANUFACTURER.
8. TECHNICAL FIELD SERVICES, INC., JACKSONVILLE, FLORIDA (904) 278-5250
9. ENSURE GOOD ELECTRICAL CONTACT BETWEEN BACK PANEL AND ALL MECHANICAL GROUND CONNECTIONS.

NO.	BY	DATE	REVISIONS
6.			
5.			
4.			
3.			
2.			
1.			

ELECTRICAL SCHEMATIC

MANUFACTURER
ADDRESS1
ADDRESS2

CONTACT_NAME
CONTACT_NUMBER

JEA Building Community sm

DESIGNER:
DRAWN BY:
DATE:
CHECKED BY:
DATE:
2021 STANDARD PACKAGE, REV. 1

SHEET TITLE: BACK PANEL LAYOUT
PROJECT: --- PROJECT NAME ---
3-PHASE VFD LIFT STATION DIAGRAM
JOB No: 12345678
SHEET 2 OF 10

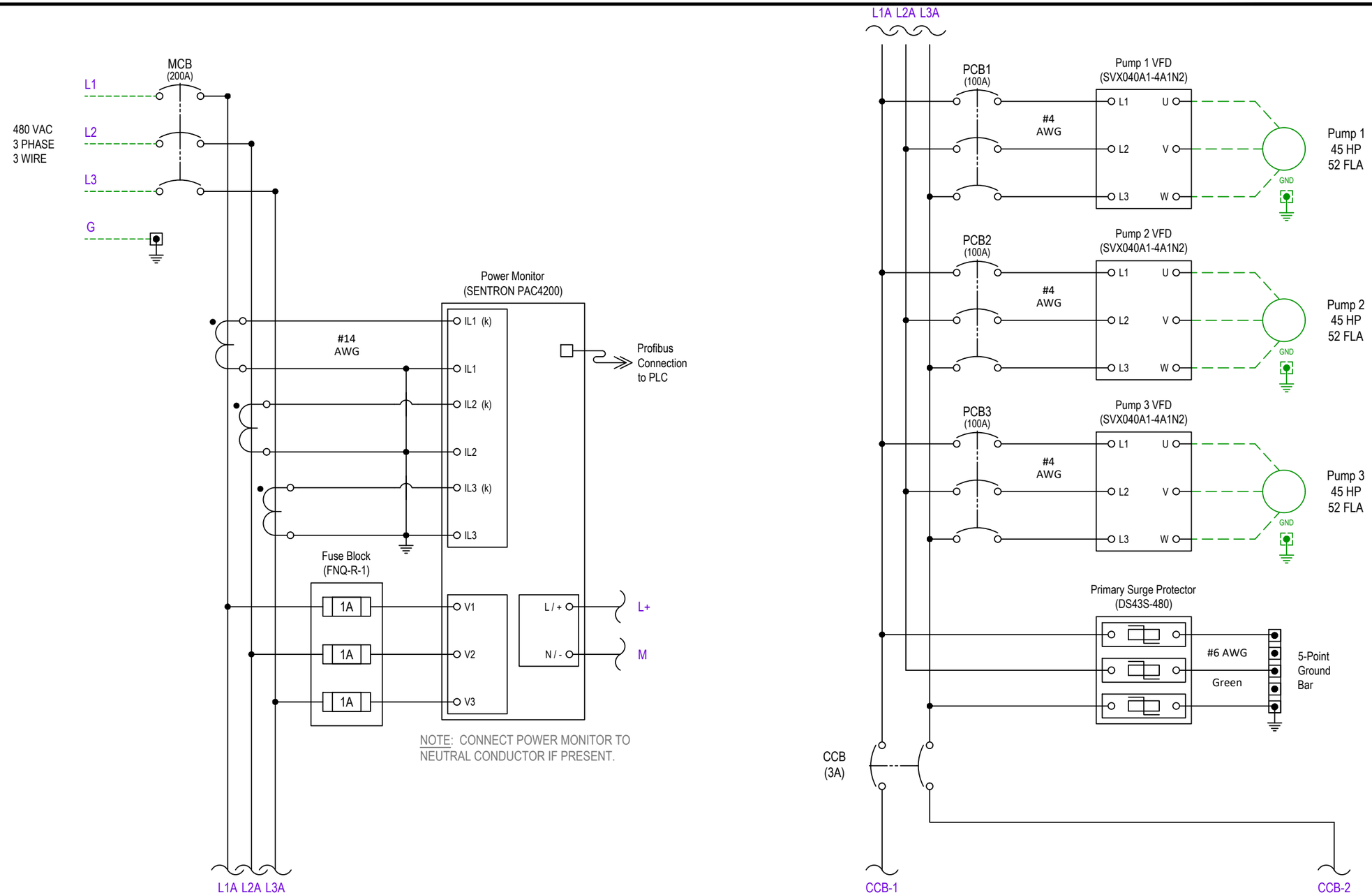

NO.	BY	DATE	REVISIONS
6.			
5.			
4.			
3.			
2.			
1.			

ELECTRICAL SCHEMATIC

MANUFACTURER
ADDRESS1
ADDRESS2

CONTACT_NAME
CONTACT_NUMBER

JEA Building Community sm

DESIGNER:
DRAWN BY:
DATE:
CHECKED BY:
DATE:
2021 STANDARD PACKAGE, REV. 1

SHEET TITLE: 240 VAC VOLTAGE

PROJECT: --- PROJECT NAME ---

3-PHASE VFD LIFT STATION DIAGRAM

JOB No: 12345678

SHEET 3 OF 10

GENERAL NOTES:

1. THIS DRAWING IS FOR 480VAC SERVICE. THE TAPS ON THE TRANSFORMER MUST BE CONNECTED FOR 480VAC.
2. RELAYS MUST BE CHANGED AS REQUIRED BY PUMP MANUFACTURER AND ADJUSTED TO RECOMMENDED SETTINGS.
3. ALL CONTROL WIRING AND 12-18 AWG SHALL BE STRANDED TIN-PLATED COPPER WIRE. APPLY DIELECTRIC GREASE TO ENDS TO PREVENT CORROSION.
4. ALL WIRES IN CONTROL PANEL SHALL BE TERMINATED WITH FERRULES.
5. ALL WIRES TERMINATING AT PLC RACK MUST BE ROUTED THROUGH WIREWAY FROM BELOW.
6. ALL ANALOG SIGNAL WIRING SHALL BE SHIELDED CABLE.
7. THIS DRAWING IS FOR A TRIPLEX PUMP STATION. DUPLEX PUMP STATIONS REQUIRE FEWER PUMP CONTROLS.

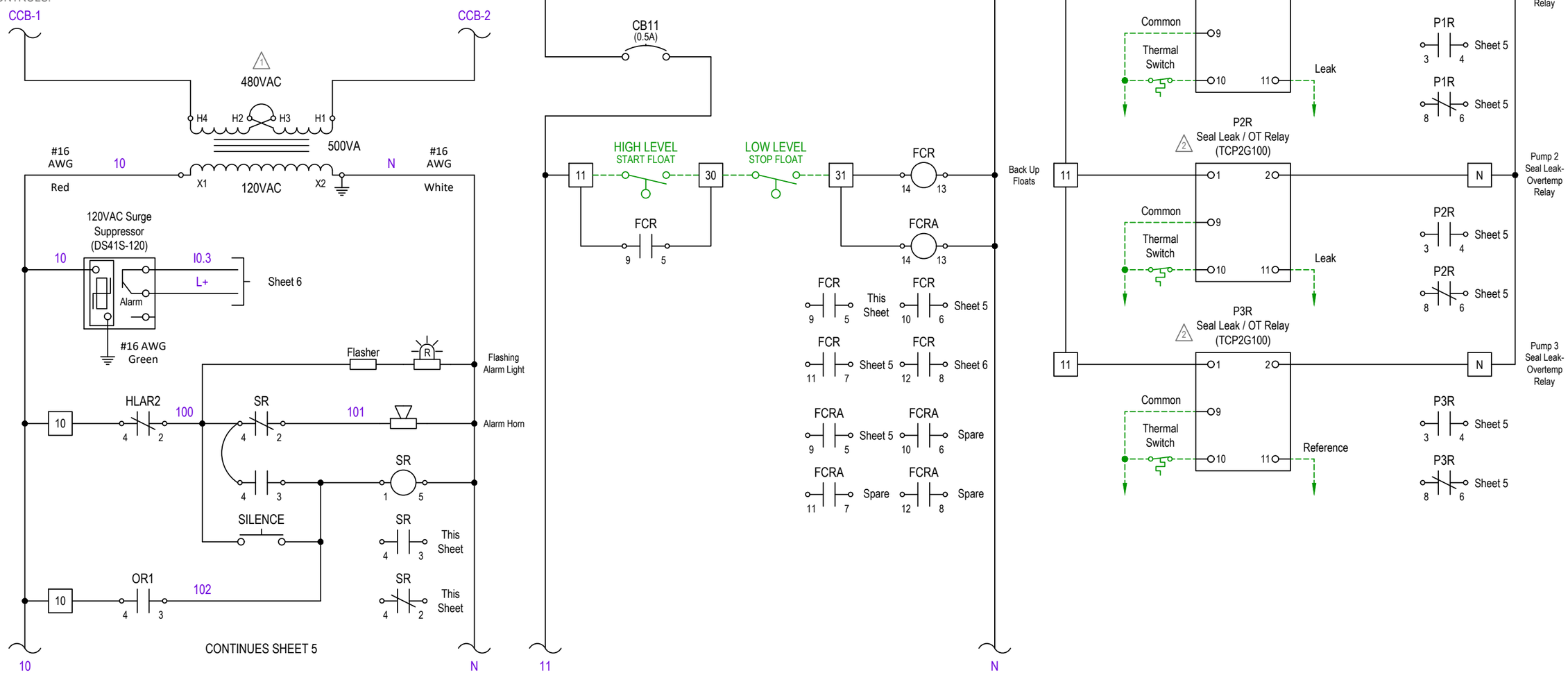

NO.	BY	DATE	REVISIONS
6.			
5.			
4.			
3.			
2.			
1.			

ELECTRICAL SCHEMATIC

MANUFACTURER
ADDRESS1
ADDRESS2

CONTACT_NAME
CONTACT_NUMBER

JEA Building Community sm

DESIGNER:
DRAWN BY:
DATE:
CHECKED BY:
DATE:
2021 STANDARD PACKAGE, REV. 1

SHEET TITLE: 120 VAC VOLTAGE
PROJECT: --- PROJECT NAME ---
3-PHASE VFD LIFT STATION DIAGRAM
JOB No: 12345678
SHEET 4 OF 10

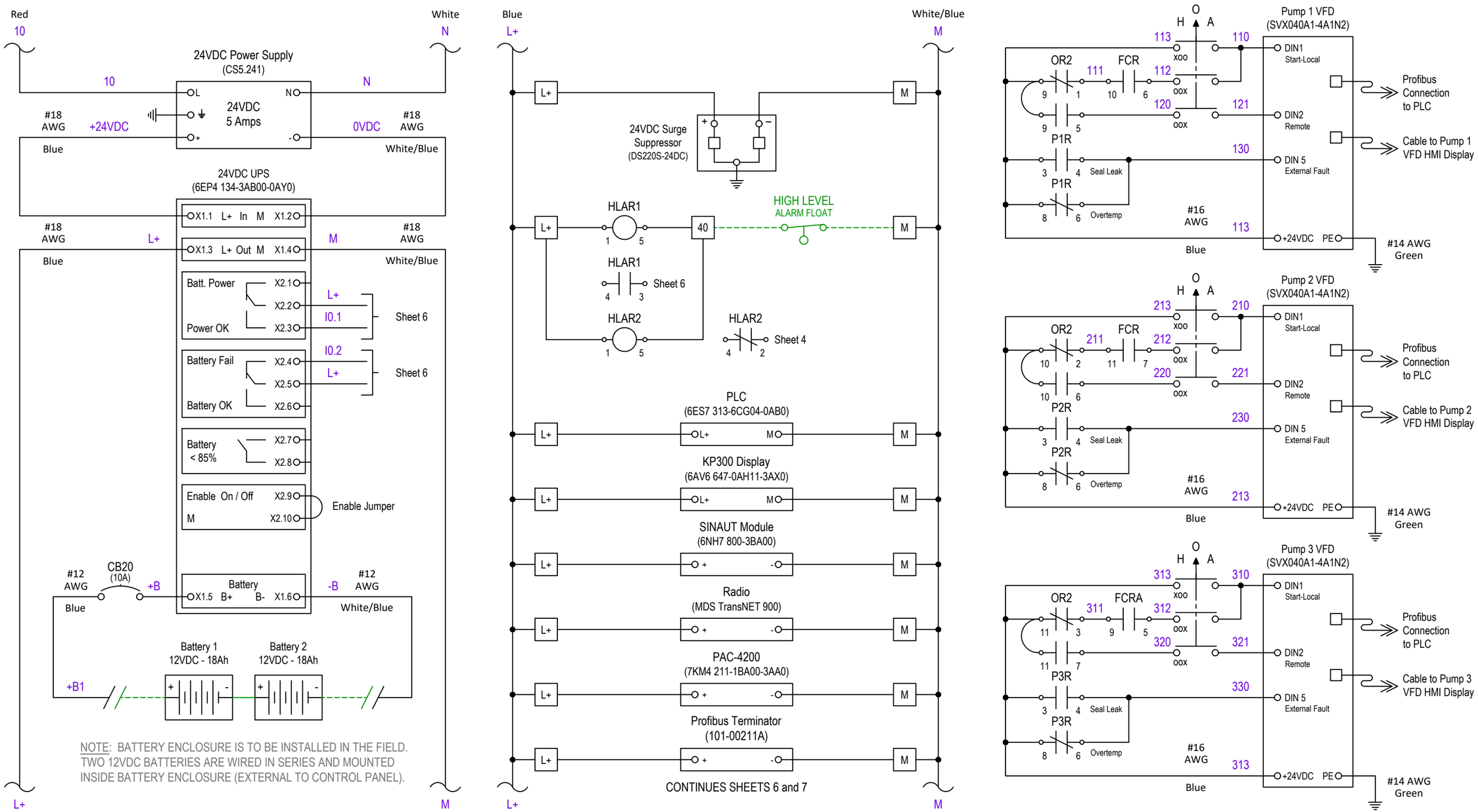

NO.	BY	DATE	REVISIONS
6.			
5.			
4.			
3.			
2.			
1.			

ELECTRICAL SCHEMATIC

MANUFACTURER
ADDRESS1
ADDRESS2

CONTACT_NAME
CONTACT_NUMBER

JEA Building Community sm

DESIGNER:	
DRAWN BY:	
DATE:	
CHECKED BY:	
DATE:	
2021 STANDARD PACKAGE, REV. 1	

SHEET TITLE: 24 VDC VOLTAGE

PROJECT: --- PROJECT NAME ---

3-PHASE VFD LIFT STATION DIAGRAM

JOB No: 12345678

SHEET 5 OF 10

RACK: 0 SLOT: 4

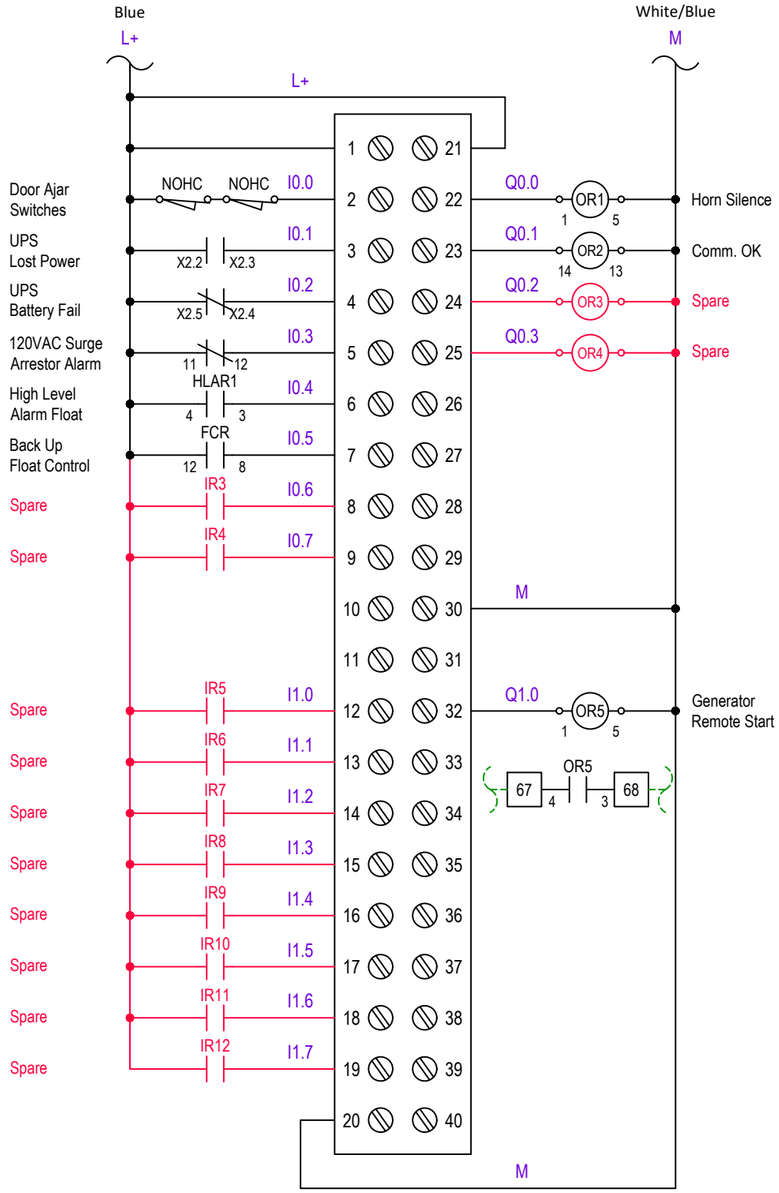

6ES7 313-6CG04-0AB0	
16 Digital Input - 16 Relay Out	
1	1L+ = +24V
2	Input 0.0
3	Input 0.1
4	Input 0.2
5	Input 0.3
6	Input 0.4
7	Input 0.5
8	Input 0.6
9	Input 0.7
10	
11	
12	Input 1.0
13	Input 1.1
14	Input 1.2
15	Input 1.3
16	Input 1.4
17	Input 1.5
18	Input 1.6
19	Input 1.7
20	1M = DC COM
21	2L+ = +24V
22	Output 0.0
23	Output 0.1
24	Output 0.2
25	Output 0.3
26	Output 0.4
27	Output 0.5
28	Output 0.6
29	Output 0.7
30	2M = DC COM
31	3L+ = +24V
32	Output 1.0
33	Output 1.1
34	Output 1.2
35	Output 1.3
36	Output 1.4
37	Output 1.5
38	Output 1.6
39	Output 1.7
40	3M = DC COM

RACK: - SLOT: -

NO.	BY	DATE	REVISIONS
6.			
5.			
4.			
3.			
2.			
1.			

ELECTRICAL SCHEMATIC

MANUFACTURER
ADDRESS1
ADDRESS2

CONTACT_NAME
CONTACT_NUMBER

JEA Building Community sm

DESIGNER:
DRAWN BY:
DATE:
CHECKED BY:
DATE:
2021 STANDARD PACKAGE, REV. 1

SHEET TITLE: PLC DIGITAL I/O

PROJECT: --- PROJECT NAME ---
3-PHASE VFD LIFT STATION DIAGRAM

JOB No: 12345678

SHEET 6 OF 10

RACK: 0 SLOT: 5

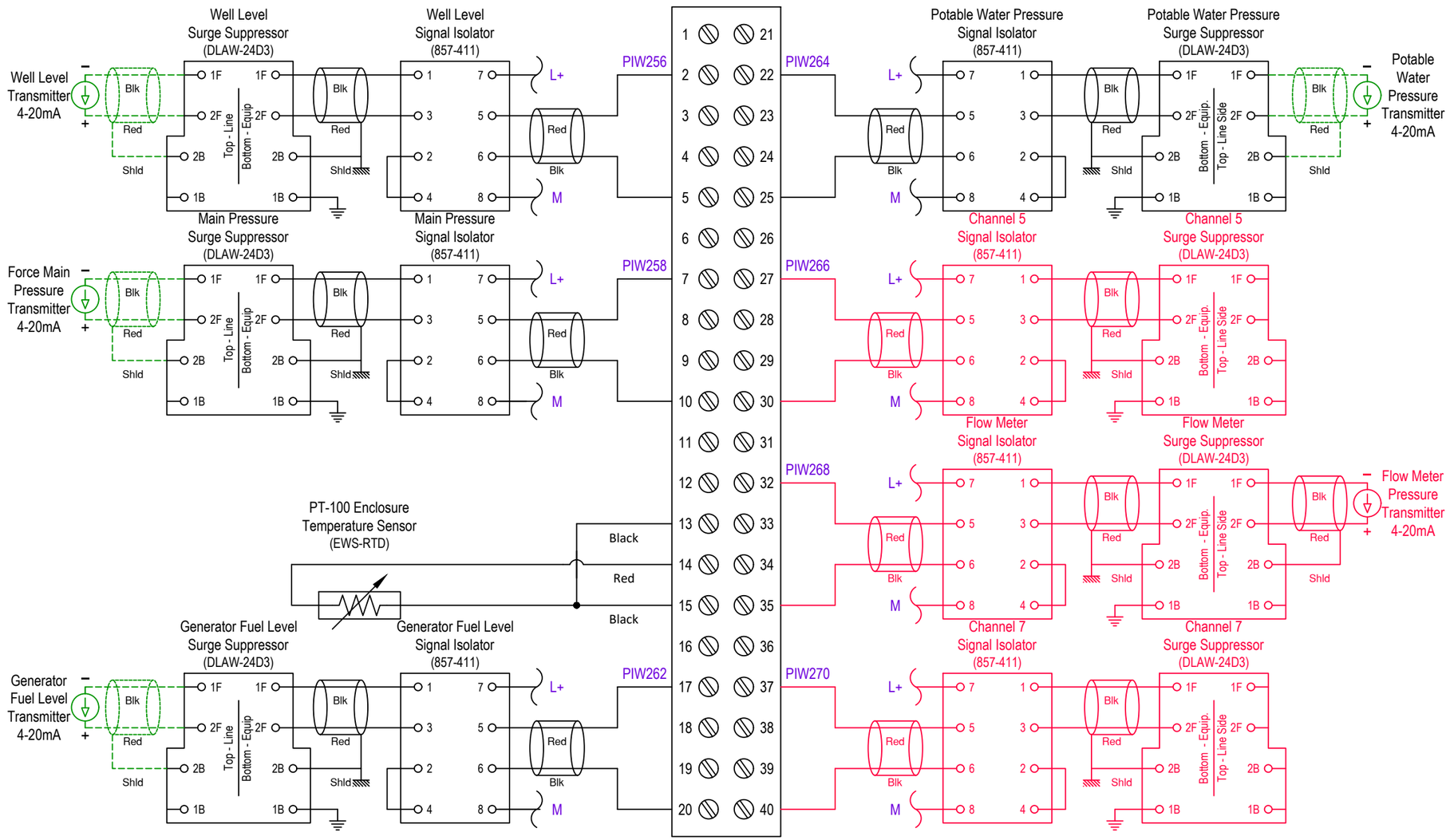

6ES7 331-1KF02-0AB0	
8 Input Analog	
1	U+ = > CH0 - PIW256
2	I +
3	S -
4	M +
5	M -
6	U+ = > CH1 - PIW258
7	I +
8	S -
9	M +
10	M -
11	U+ = > CH2 - PIW260
12	I +
13	S -
14	M +
15	M -
16	U+ = > CH3 - PIW262
17	I +
18	S -
19	M +
20	M -
21	U+ = > CH4 - PIW264
22	I +
23	S -
24	M +
25	M -
26	U+ = > CH5 - PIW266
27	I +
28	S -
29	M +
30	M -
31	U+ = > CH6 - PIW268
32	I +
33	S -
34	M +
35	M -
36	U+ = > CH7 - PIW270
37	I +
38	S -
39	M +
40	M -

NO.	BY	DATE	REVISIONS
6.			
5.			
4.			
3.			
2.			
1.			

ELECTRICAL SCHEMATIC

MANUFACTURER
ADDRESS1
ADDRESS2

CONTACT_NAME
CONTACT_NUMBER

JEA Building Community sm

DESIGNER:
DRAWN BY:
DATE:
CHECKED BY:
DATE:
2021 STANDARD PACKAGE, REV. 1

SHEET TITLE: PLC ANALOG INPUT

PROJECT: --- PROJECT NAME ---
3-PHASE VFD LIFT STATION DIAGRAM

JOB No: 12345678

SHEET 7 OF 10

RACK: 0 SLOT: 6

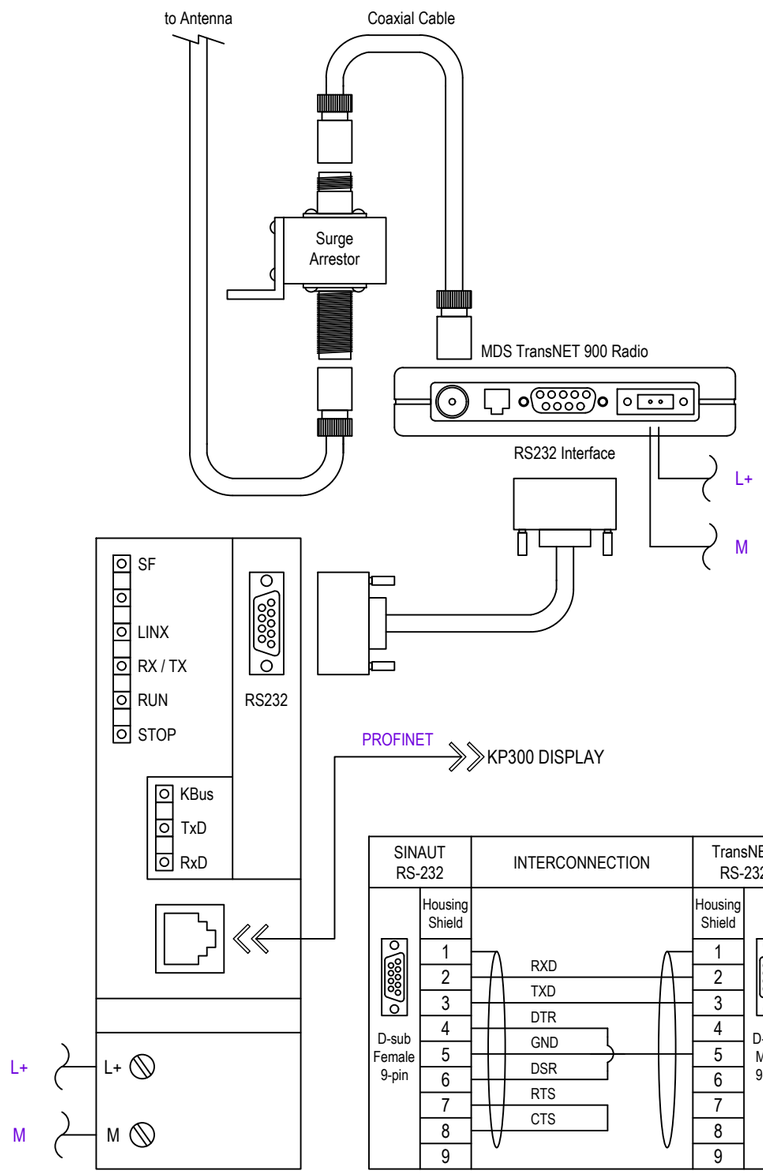

6NH7 800-3BA00	
SINAUT - > TIM3V-IE	
	RS-232 PIN OUT
1	DCD - Input
2	RXD - Input
3	TXD - Output
4	DTR - Output
5	GND
6	--
7	RTS - Output
8	CTS - Input
	RJ-45 PIN OUT
1	TXD+ - > Output
2	TXD- - > Output
3	RXD+ - > Input
4	--
5	--
6	RXD- - > Input
7	--
8	--
	Power Connector
L+	+ 24VDC
M	DC Common

VFD Functional

- OFF - Drive is disabled.
- MANUAL - The drive will be forced to Local control and will be given a start signal to ramp it up to maximum speed.
- AUTO - If the VFD selector switch is put into Auto and Communication OK relay is good then the drive will be controlled over Profibus using PPO4. If the PLC communication is ever lost to the VFD, the communication OK relay will drop out and control the VFD from the Float Control Relay. The communication OK relay is controlled by the PLC and is to be energized as long as the VFD communication is OK.

Setting up Cutler-Hammer SVX9000 on Profibus with Backup Float Revised 6/7/13

- Contact JEA for the latest documentation.

Profibus Connection Diagram

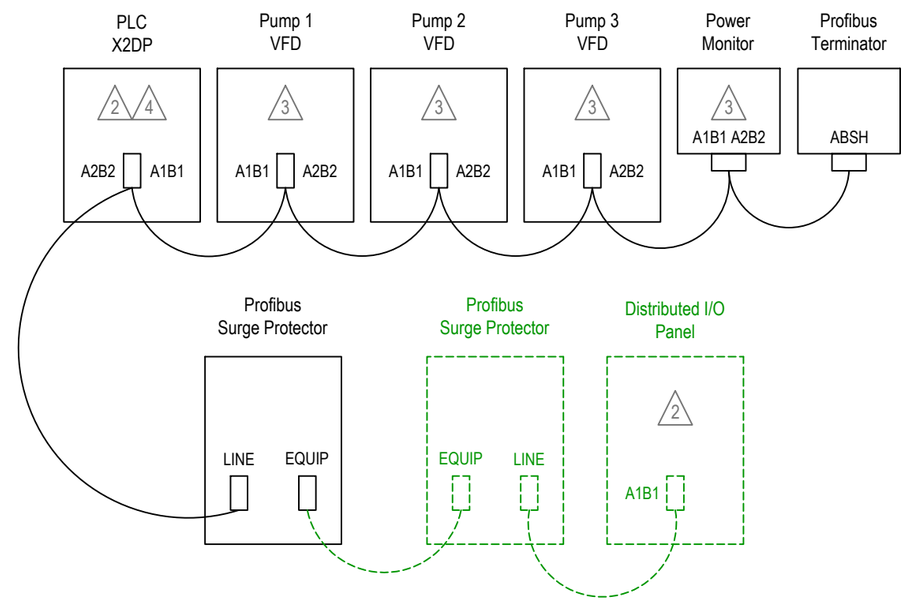

GENERAL NOTES:

1. ALL PLC I/O WIRING SHALL BE #18 AWG. APPLY DIELECTRIC GREASE TO ENDS TO PREVENT CORROSION.
2. SET PROFIBUS CONNECTOR RESISTOR SWITCH TO THE "ON" POSITION.
3. SET PROFIBUS CONNECTOR RESISTOR SWITCH TO THE "OFF" POSITION.
4. SET PROFIBUS CONNECTOR RESISTOR SWITCH TO THE "OFF" POSITION IF A DISTRIBUTED I/O PANEL IS PRESENT.

NO.	BY	DATE	REVISIONS
6.			
5.			
4.			
3.			
2.			
1.			

ELECTRICAL SCHEMATIC

MANUFACTURER
ADDRESS1
ADDRESS2

CONTACT_NAME
CONTACT_NUMBER

JEA Building Community

DESIGNER:
DRAWN BY:
DATE:
CHECKED BY:
DATE:
2021 STANDARD PACKAGE, REV. 1

SHEET TITLE: PLC & RADIO CONNECTION
PROJECT: --- PROJECT NAME ---
3-PHASE VFD LIFT STATION DIAGRAM
JOB No: 12345678
SHEET 8 OF 10

GENERAL NOTES:

1. ALL TERMINALS, RELAYS, SURGE SUPPRESSORS, BREAKERS, AND OTHER DEVICES MUST BE LABELED.
2. INSTALL PLUGGABLE JUMPERS (Y) ON TERMINALS WHERE INDICATED. APPLY DIELECTRIC GREASE TO JUMPERS TO PREVENT CORROSION.
3. ALL WIRES IN CONTROL PANEL SHALL BE TERMINATED WITH FERRULES.

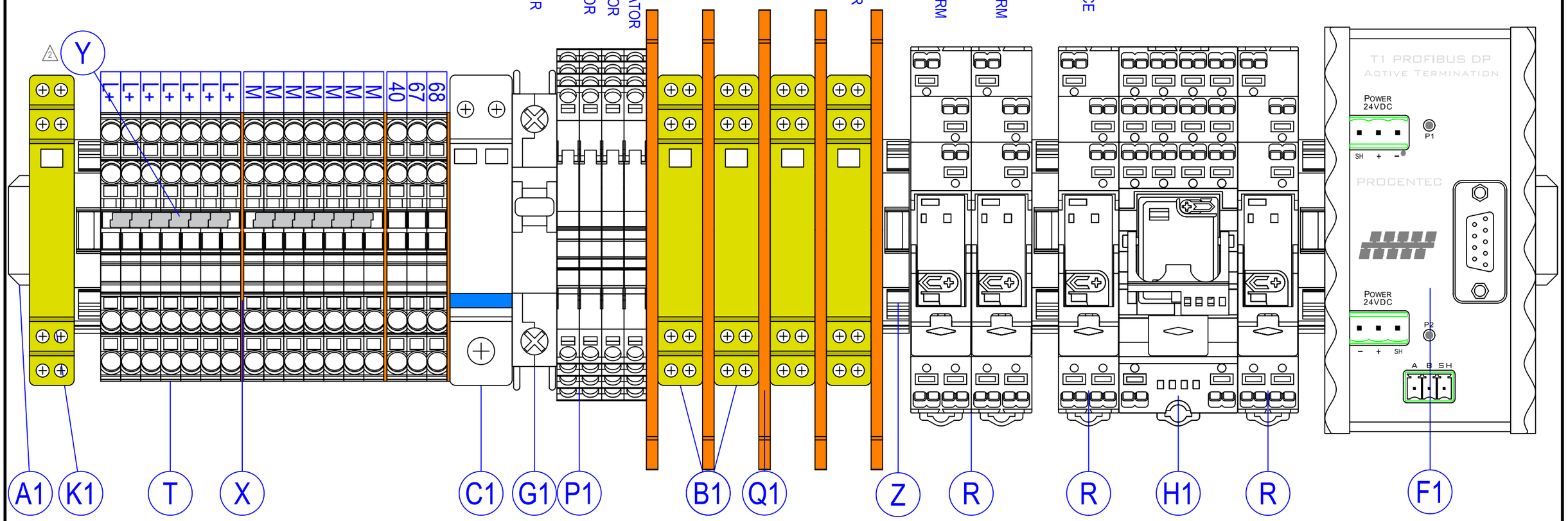

NO.	BY	DATE	REVISIONS
6.			
5.			
4.			
3.			
2.			
1.			

ELECTRICAL SCHEMATIC

MANUFACTURER
ADDRESS1
ADDRESS2

CONTACT_NAME
CONTACT_NUMBER

JEA sm
Building Community sm

DESIGNER:
DRAWN BY:
DATE:
CHECKED BY:
DATE:
2021 STANDARD PACKAGE, REV. 1

SHEET TITLE: 24 VDC TERMINAL BLOCK LAYOUT

PROJECT: --- PROJECT NAME ---
3-PHASE VFD LIFT STATION DIAGRAM

JOB No: 12345678

SHEET 9 OF 10

GENERAL NOTES:

1. ALL TERMINALS, RELAYS, BREAKERS, SURGE SUPPRESSORS, AND OTHER DEVICES MUST BE LABELED.
2. INSTALL PLUGGABLE JUMPERS (Y) ON TERMINALS WHERE INDICATED. APPLY DIELECTRIC GREASE TO JUMPERS TO PREVENT CORROSION.
3. RELAYS MUST BE CHANGED AS REQUIRED BY PUMP MANUFACTURER AND ADJUSTED TO RECOMMENDED SETTINGS.
4. ALL WIRES IN CONTROL PANEL SHALL BE TERMINATED WITH FERRULES.

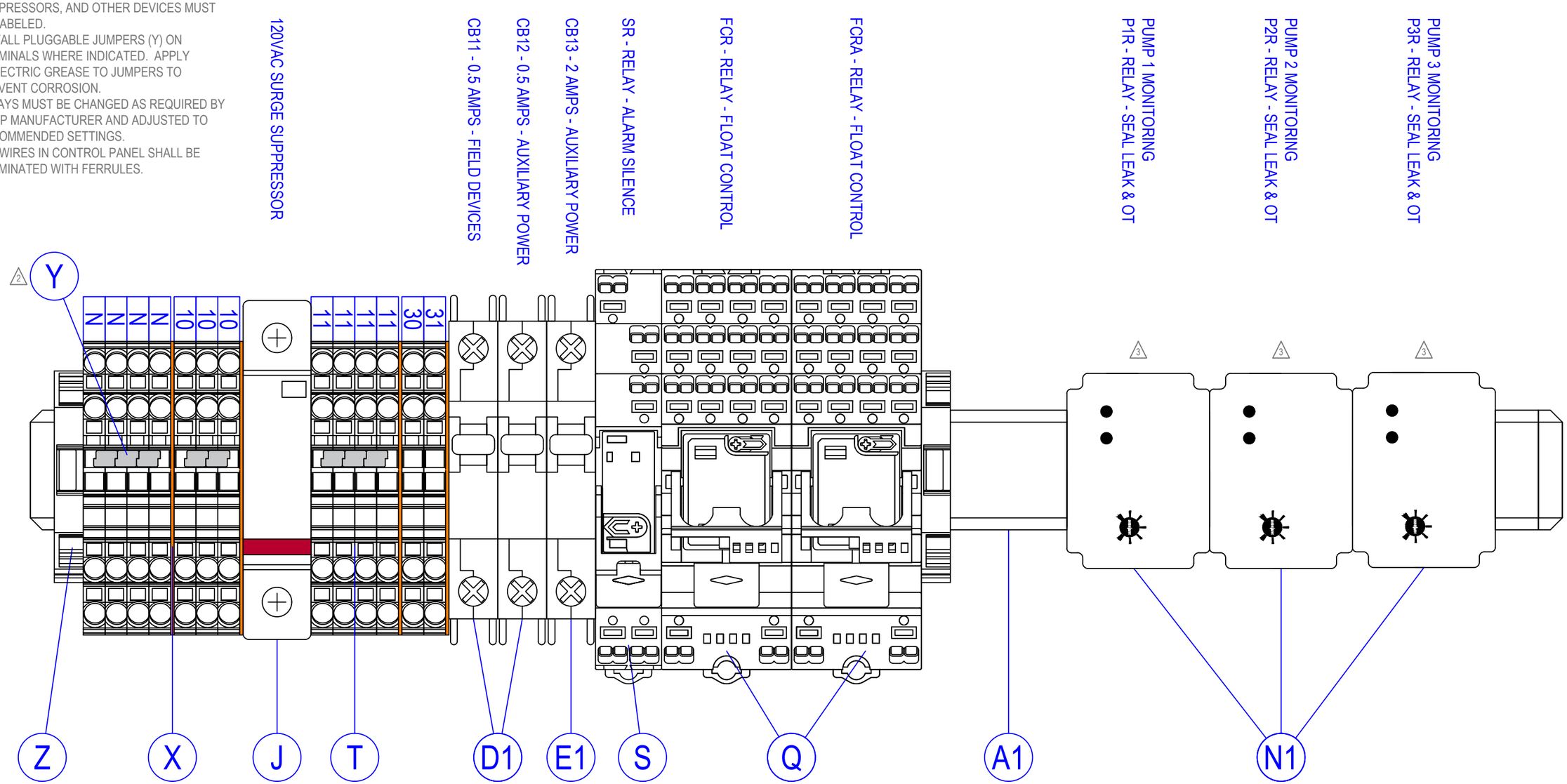

NO.	BY	DATE	REVISIONS
6.			
5.			
4.			
3.			
2.			
1.			

ELECTRICAL SCHEMATIC

MANUFACTURER
ADDRESS1
ADDRESS2

CONTACT_NAME
CONTACT_NUMBER

JEA Building Community sm

DESIGNER:	
DRAWN BY:	
DATE:	
CHECKED BY:	
DATE:	
2021 STANDARD PACKAGE, REV. 1	

SHEET TITLE: 120 VAC TERMINAL BLOCK LAYOUT

PROJECT: --- PROJECT NAME ---

3-PHASE VFD LIFT STATION DIAGRAM

JOB No: 12345678

SHEET 10 OF 10

INSTRUCTIONS:

1. CONTRACTOR SHALL USE THIS DRAWING FILE TO CREATE SHOP DRAWINGS FOR JEA REVIEW.
2. RETURN COMPLETED SHOP DRAWINGS AS PDF FILE TO ARISS FAJARDO AT FAJAAJ@JEA.COM FOR APPROVAL.
3. PLEASE CONTACT ARISS FAJARDO FOR QUESTIONS OR ADDITIONAL INFORMATION.
4. DO NOT PRINT THIS SHEET IN SUBMITAL SET.

NO.	BY	DATE	REVISIONS
6.			
5.			
4.			
3.			
2.			
1.	AJF	12/13/19	INITIAL REVISION

ELECTRICAL SCHEMATIC

MANUFACTURER
ADDRESS1
ADDRESS2

CONTACT_NAME
CONTACT_NUMBER

JEA Building Community sm

DESIGNER:
DRAWN BY:
DATE:
CHECKED BY:
DATE:
2021 STANDARD PACKAGE, REV. 1

SHEET TITLE: INSTRUCTION SHEET
PROJECT: --- PROJECT NAME ---
ACROSS THE LINE LIFT STATION DIAGRAM
JOB No: 12345678
SHEET 0 OF 10

FRONT VIEW

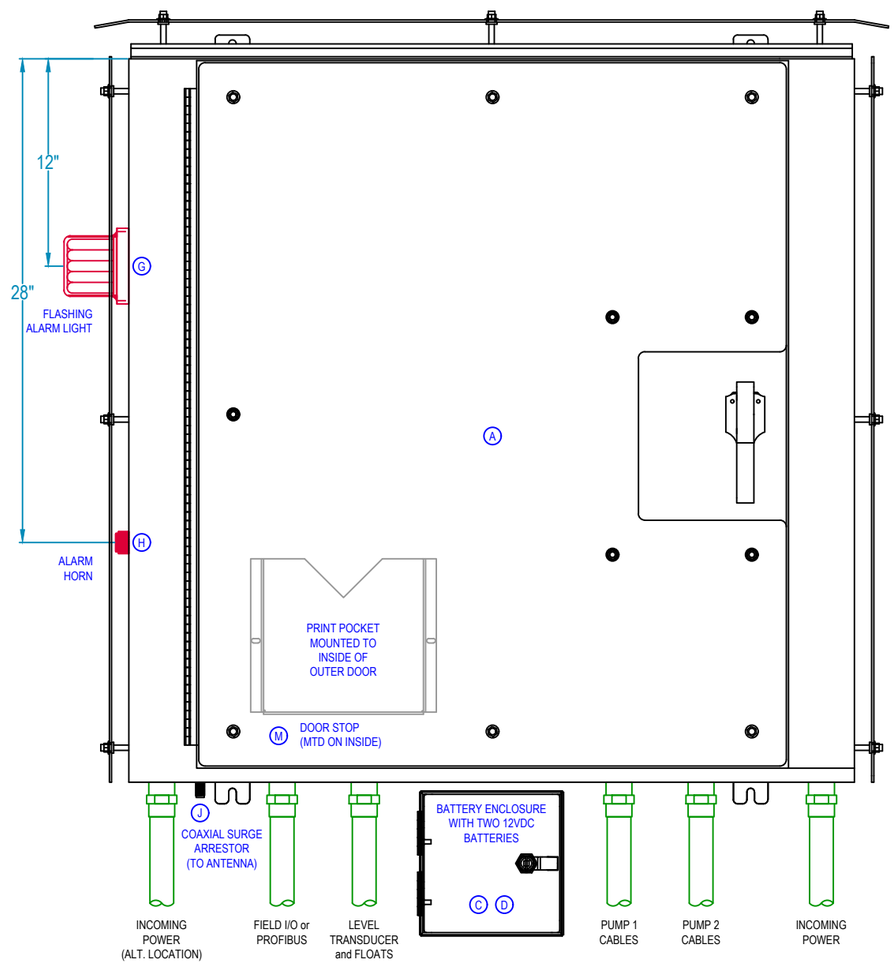

BILL of MATERIAL

		QTY	MANUFACTURER	PART NUMBER	DESCRIPTION
2	A	1	SCHAEFER	SPN123RAL-424210-JEA	CUSTOM ENCLOSURE, NEMA 12/3R, ALUM.
2	B	1	OEM	--	HINGED INNER DOOR, .125 ALUMINUM
	C	1	SCHAEFER	SPN1AL-888-JEA	BATTERY ENCLOSURE, .125 ALUMINUM
	D	2	POWER SONIC	PS-12180 F2	BATTERY, LEAD-ACID, 12VDC, 18Ah
	E	--	--	--	--
	F	1	SIEMENS	52PX8A1K / 52BAK	MOMENTARY PUSHBUTTON, 30mm, FLUSH
	G	1	INGRAM PRODUCTS	LX40F	ALARM LIGHT W/ FLASHER, 120VAC, RED
	H	1	INGRAM PRODUCTS	PW120AR	ALARM HORN, ELECTRONIC, 120VAC, RED
4 2	I	1	APT	S50A240V3H	SURGE PROTECTOR, 240V DELTA HI-LEG
		1	APT	S50A277V3Y	SURGE PROTECTOR, 480V WYE
	J	1	TIMES-PROTECT	LP-STR-NFF	COAXIAL SURGE ARRESTOR (ANTENNA)
	K	1	SIEMENS	6AV6 647-0AH11-3AX0	OPERATOR PANEL KP300 DISPLAY
	L	1	OMRON	6X283	SNAP ACTION SWITCH (DOOR AJAR)
		1	ALLIED	642-2137	ACTUATOR FOR SWITCH
	M	2	SCHAEFER	SP-DSTOPK-SS-SW	INNER/OUTER DOOR STOP KIT, SS
	N	--	--	--	--
9	O	2	SIEMENS	3UF7 210-1AA01-0	SIMOCODE PRO V DISPLAY (PUMPS)

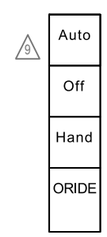

SIMOCODE PRO-V DISPLAY INSERT, TYPICAL FOR TWO (N.T.S.)

INNER DOOR VIEW

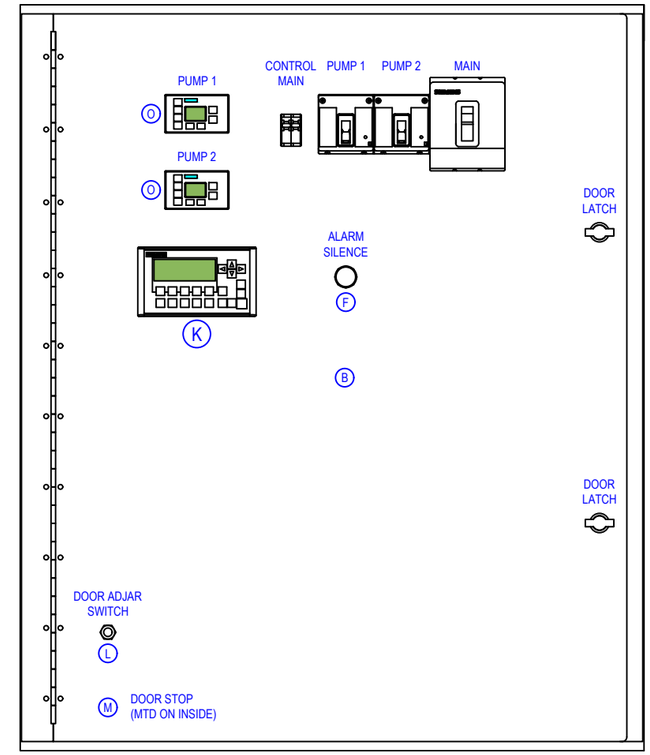

HINGED INNER DOOR:
FABRICATED FROM .125 ALUMINUM WITH CONTINUOUS HINGE, TWIST LATCHES, AND DOOR STOP MOUNTED ON INSIDE.

CUSTOM ENCLOSURE:
SPN123RAL-424210-JEA (42"H x 42"W x 10"D) NEMA 12/3R RATED, FABRICATED FROM .125 MARINE GRADE ALUMINUM. OUTER DOOR IS FITTED WITH A PADLOCKABLE 3-POINT LATCH AND DOOR STOP.

HEAT SHIELDS FABRICATED FROM .125 MARINE GRADE ALUMINUM SHALL BE INSTALLED ON FRONT, BACK, TOP, AND SIDES. HOLES SHALL BE CUT IN SHIELD FOR ALARM LIGHT AND HORN.

NOTE: BATTERY ENCLOSURE IS TO BE INSTALLED IN THE FIELD

GENERAL NOTES:

1. REFER TO "433 LIFT STATION SCADA CONTROLS SPECIFICATION" FOR FURTHER DETAILS THAT MUST BE ADHERED TO SUCH AS WIRE, CONTACTOR, AND CIRCUIT BREAKER SIZING.
2. THIS DRAWING IS AN EXAMPLE OF HOW OVERALL CABINET IS TO BE DESIGNED. THE DRAWING WILL NEED TO BE REVISED BASED ON THE PUMP MANUFACTURER, SIZE AND NUMBER OF PUMPS. THINGS THAT WILL CHANGE ARE CIRCUIT BREAKER SIZE, WIRE SIZE, CONTACTOR SIZE, SIMOCODE VOLTAGE/CURRENT MODULE, AND OTHER ITEMS. REFER TO SPECIFICATIONS FOR FURTHER DETAILS.
3. REFER TO NOTES AND DETAILS ON ALL DRAWING SHEETS FOR MORE MANUFACTURING DETAILS.
4. THE SURGE PROTECTION DEVICE (SPD) IS TO BE SHIPPED LOOSE FOR MOUNTING AT THE DISCONNECT IN THE FIELD. THE CORRECT SPD MUST BE SELECTED BASED ON THE SERVICE VOLTAGE: 240V DELTA HI-LEG OR 480V WYE.
5. ALL FIELD WIRING SHALL BE #12 AWG STRANDED, TIN-PLATED COPPER. APPLY DIELECTRIC GREASE TO ENDS TO PREVENT CORROSION.
6. ALL PLC I/O WIRING INTERNAL TO THE CONTROL PANEL SHALL BE #18 AWG.
7. ALL WIRES IN CONTROL PANEL SHALL BE TERMINATED WITH FERRULES.
8. ALL MOUNTING SCREWS SHALL BE STAINLESS STEEL, DRILLED AND TAPPED (NO SELF-TAPPING SCREWS ARE ALLOWED).
9. PRINT LED LEGEND STRIPS (BLACK & WHITE ON TRANSPARENCY) AND INSERT INTO EACH PUMP SIMOCODE PRO-V DISPLAY (ITEM O).

NO.	BY	DATE	REVISIONS
6.			
5.			
4.			
3.			
2.			
1.			

ELECTRICAL SCHEMATIC

MANUFACTURER
ADDRESS1
ADDRESS2

CONTACT_NAME
CONTACT_NUMBER

JEA sm
Building Community sm

DESIGNER:
DRAWN BY:
DATE:
CHECKED BY:
DATE:
2021 STANDARD PACKAGE, REV. 1

SHEET TITLE: FRONT PANEL VIEW
PROJECT: --- PROJECT NAME ---
ACROSS THE LINE LIFT STATION DIAGRAM
JOB No: 12345678
SHEET 1 OF 10

BACK PANEL LAYOUT

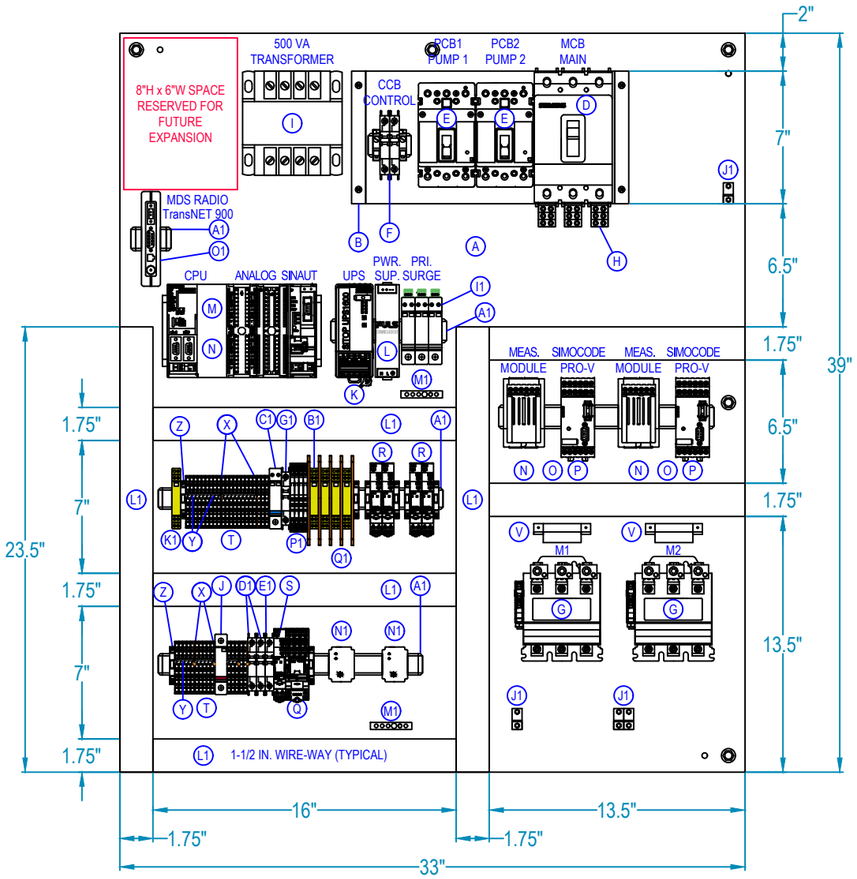

BACK PANEL:
SPP-4236 (39"H x 33"W) FABRICATED FROM 12ga. CARBON STEEL WITH WHITE INDUSTRIAL GRADE ENAMEL FINISH.

DRAWING LAYER COLOR LEGEND:

- BLACK - ELECTRICAL SCHEMATIC WIRING DIAGRAMS AND DEVICES
- BLUE - PART IDENTIFICATION
- PURPLE - WIRE NUMBERS
- GREEN - FIELD DEVICES AND WIRING OUTSIDE ENCLOSURE (DASHED)
- RED - FUTURE DEVICES AND WIRING
- TEAL - DIMENSIONS

BILL of MATERIAL

		QTY	MANUFACTURER	PART NUMBER	DESCRIPTION
2	A	1	SCHAEFER	SPP-4236	BACK PANEL, CARBON STEEL, WHITE
2	B	1	OEM	BREAKER MOUNT	TO RAISE CBs FLUSH WITH INNER DOOR
	C	--	--	--	--
2	D	1	SIEMENS	NFG3B200L	MCB, 3 POLE, 200A
2	E	2	SIEMENS	NEG3B100L	PCB1 and PCB2, 3 POLE, 100A
	F	1	WEIDMULLER	9926 25 2006	CCB, UL489, 2 POLE, 6A (240V SERVICE)
			WEIDMULLER	9926 25 2003	CCB, UL489, 2 POLE, 3A (480V SERVICE)
5 2	G	2	SIEMENS	40HP32A	FVNR CONTACTOR, 3 POLE, NEMA 3
2	H	1	SIEMENS	3TA6FG04	POWER DISTRIBUTION LUGS, KIT OF 3
	I	1	SIEMENS	MT0500A	CONTROL TRANSFORMER, 500VA
	J	1	CITEL	DS41S-120	120VAC SURGE SUPPRESSOR, BASE
	K	1	SIEMENS	6EP4 134-3AB00-0AY0	SITOP DC UPS, 10A WITH CHARGER
	L	1	PULS	CS5.241	24VDC POWER SUPPLY, 5A
	M	1	SIEMENS	6ES7 390-1AE80-0AA0	480mm MOUNTING RAIL FOR PLC EQUIP.
		1	SIEMENS	6ES7 313-6CG04-0AB0	CPU 313C-2DP, 16 DI - 16 DO PLC
		1	SIEMENS	6ES7 953-8LG30-0AA0	MMC MEMORY CARD, 128KB
		1	SIEMENS	6ES7 331-1KF02-0AB0	8 FUNCTION ANALOG INPUT MODULE
		2	SIEMENS	6ES7 392-1BM01-0AA0	40-PIN SPRING CONNECTOR
		1	SIEMENS	6NH7 800-3BA00	SINAUT ST7, TIM 3V-IE MODULE
	N	3	BRAD HARRISON	PA9D01-42	PROFIBUS CONNECTOR, 90°, PG PORT
	O	X	BRAD HARRISON	MA9D00-42	PROFIBUS CONNECTOR, 180°
	P	2	SIEMENS	3UF7 010-1AU00-0	SIMOCODE PRO V BASE UNIT, 120VAC
		2	SIEMENS	3UF7 111-1AA01-0	SIMOCODE PRO I/E MEAS. MODULE, 3-40A
2			SIEMENS	3UF7 112-1AA01-0	SIMOCODE PRO I/E MEAS. MODULE, 10-115A
		2	SIEMENS	3UF7 933-0BA00-0	SIMOCODE CABLE TO DISPLAY, 2.5M
		2	SIEMENS	3UF7 935-0AA00-0	SIMOCODE CABLE, 0.3M
	Q	1	FINDER	58P481205060	RELAY, STATUS, SPRING, 4NO-NC, 120VAC
	R	4	FINDER	4CP190245050	RELAY, STATUS, SPRING, SPDT, 24VDC
	S	1	FINDER	4CP181205060	RELAY, STATUS, SPRING, SPDT, 120VAC

BILL of MATERIAL

	QTY	MANUFACTURER	PART NUMBER	DESCRIPTION
T	36	WAGO	2002-1401	TERMINAL, 2002, SPRING, GRAY
U	1	SIEMENS	6XV1830-0EH10	PROFIBUS CABLE, FAST CONNECT TYPE
V	2	SIEMENS	49D26344	CONTACTOR SURGE SUPPRESSOR
W	2	SIEMENS	6GK1901-1BB10-2AA0	PROFINET CONNECTOR, SIPLUS
X	7	WAGO	2002-1492	TERMINAL END / PART. PLATE, ORANGE
Y	26	WAGO	2002-400	ADJACENT JUMPER, 2-WAY CONTINUOUS
Z	8	WAGO	249-116	TERMINAL END STOP, GRAY
A1	1	WAGO	210-112	2M DIN RAIL, GALVANIZED, SLOTTED
B1	4	CITEL	DLAW-24D3	ANALOG SURGE SUPPRESSOR, 24VDC
C1	1	CITEL	DS220S-24DC	24VDC SURGE SUPPRESSOR
D1	2	WEIDMULLER	9926 25 1000	CB11 and CB12, UL489, 1 POLE, 0.5A
E1	1	WEIDMULLER	9926 25 1002	CB13, UL489, 1 POLE, 2A
F1	1	SIEMENS	6XV1840-2AH10	PROFINET CABLE, FAST CONNECT
G1	1	WEIDMULLER	9926 25 1910	CB20, UL489, 1 POLE, 10A
H1	--	--	--	--
2 I1	1	CITEL	DS43S-400	PRIMARY SPD, TYPE 1, 240V DELTA HI-LEG
		CITEL	DS43S-480	PRIMARY SPD, TYPE 1, 480V WYE
J1	4	PANDUIT	LAMA2-14-QY	GROUND LUG, DUAL-RATED, #2-14AWG
K1	1	CITEL	DLA-12D3	PROFIBUS SURGE PROTECTOR
L1	2	PANDUIT	1.5"W x 3"H x 72"L	WIREWAY, HINGE COVER, WIDE FINGER
M1	2	SQUARE D	PK5GTA	EQUIPMENT GROUND BAR, 5-POINT
3 N1	2	MACROMATIC	TCP2G100	SEAL LEAK / OVERTEMP RELAY, 120VAC
O1	1	MDS	TRANSNET 900	RADIO, SPREAD-SPECTRUM, UNLICENSED
4	1	MDS	03-4124A01	DIN RAIL MOUNT KIT
	1	TFS, INC.	--	SINAUT TO RADIO NULL CABLE
P1	4	WAGO	857-411	ANALOG SIGNAL ISOLATOR
Q1	5	WAGO	209-191	SEPARATOR, ORANGE

GENERAL NOTES:

1. REFER TO "433 LIFT STATION SCADA CONTROLS SPECIFICATION" FOR FURTHER DETAILS THAT MUST BE ADHERED TO SUCH AS WIRE, CONTACTOR, AND CIRCUIT BREAKER SIZING.
2. THIS DRAWING IS AN EXAMPLE OF HOW OVERALL CABINET IS TO BE DESIGNED. THE DRAWING WILL NEED TO BE REVISED BASED ON THE PUMP MANUFACTURER, SIZE AND NUMBER OF PUMPS. THINGS THAT WILL CHANGE ARE CIRCUIT BREAKER SIZE, WIRE SIZE, CONTACTOR SIZE, SIMOCODE VOLTAGE/CURRENT MODULE, AND OTHER ITEMS. REFER TO SPECIFICATIONS FOR FURTHER DETAILS.
3. SEAL LEAK/OVERTEMP RELAYS MUST BE CHANGED AS REQUIRED BY PUMP MANUFACTURER.
4. TECHNICAL FIELD SERVICES, INC., JACKSONVILLE, FLORIDA (904) 278-5250
5. MINIMUM SIZE FOR MOTOR CONTACTORS SHALL BE NEMA SIZE 1.
6. WIRE BEND FROM CIRCUIT BREAKERS SHALL NOT BE ROUTED OVER OR OBSTRUCT WIREWAY BELOW.
7. ENSURE GOOD ELECTRICAL CONTACT BETWEEN BACK PANEL AND ALL MECHANICAL GROUND CONNECTIONS.

CONTROL WIRE UL508A COLOR:

RED	-	120 VAC
WHITE	-	NEUTRAL
BLUE	-	+24 VDC
WHITE / BLUE STRIPE	-	0 VDC

NO.	BY	DATE	REVISIONS
6.			
5.			
4.			
3.			
2.			
1.			

ELECTRICAL SCHEMATIC

MANUFACTURER
ADDRESS1
ADDRESS2

CONTACT_NAME
CONTACT_NUMBER

JEA sm Building Community sm

DESIGNER:
DRAWN BY:
DATE:
CHECKED BY:
DATE:
2021 STANDARD PACKAGE, REV. 1

SHEET TITLE: BACK PANEL LAYOUT
PROJECT: --- PROJECT NAME ---
ACROSS THE LINE LIFT STATION DIAGRAM
JOB No: 12345678
SHEET 2 OF 10

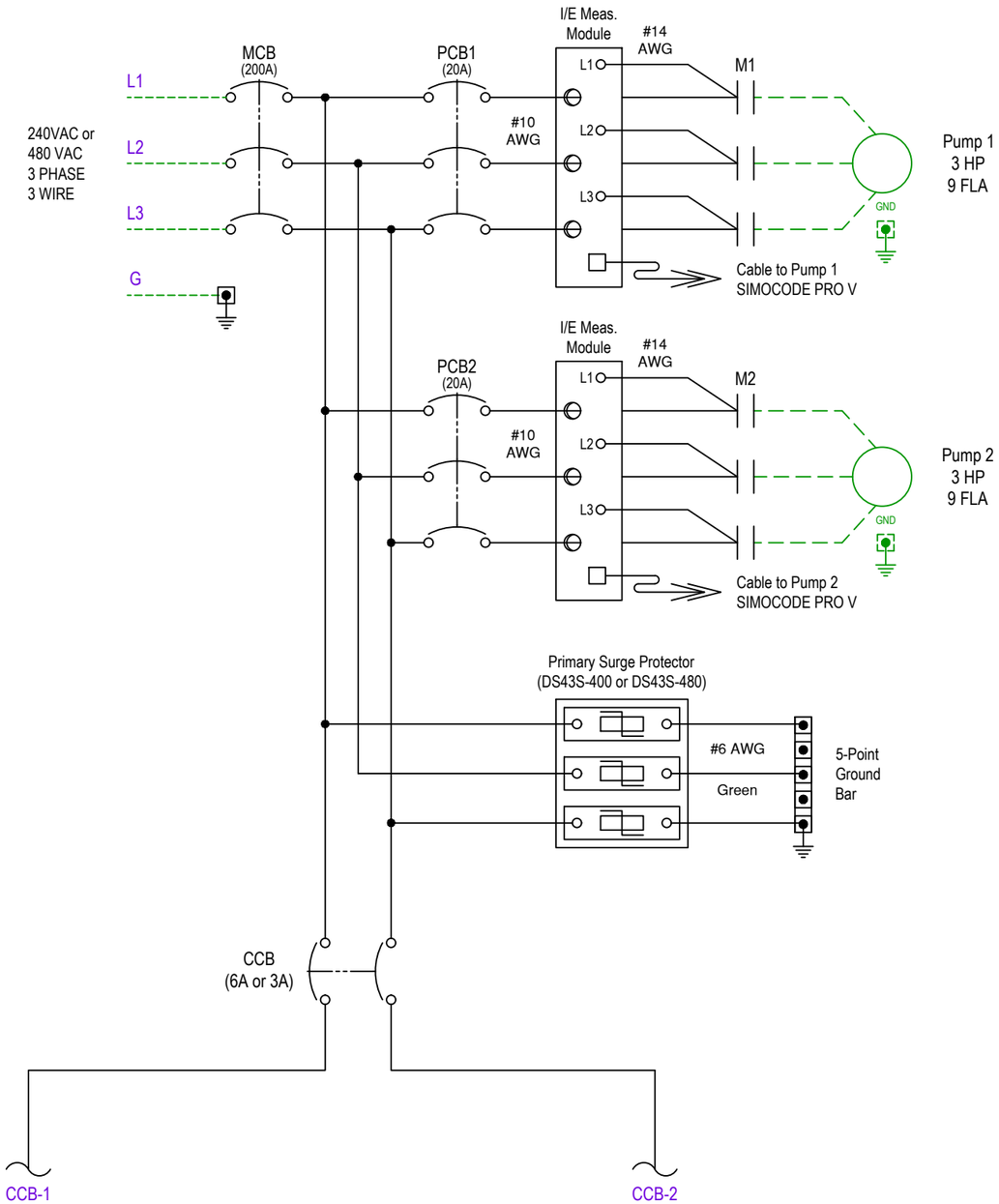

NO.	BY	DATE	REVISIONS
6.			
5.			
4.			
3.			
2.			
1.			

ELECTRICAL SCHEMATIC

MANUFACTURER
ADDRESS1
ADDRESS2

CONTACT_NAME
CONTACT_NUMBER

JEA Building Community sm

DESIGNER:
DRAWN BY:
DATE:
CHECKED BY:
DATE:
2021 STANDARD PACKAGE, REV. 1

SHEET TITLE: 240 VAC VOLTAGE

PROJECT: --- PROJECT NAME ---

ACROSS THE LINE LIFT STATION DIAGRAM

JOB No: 12345678

SHEET 3 OF 10

GENERAL NOTES:

1. THIS DRAWING IS FOR A 240VAC CONNECTION. IF SERVICE IS 480VAC, THE TAPS ON THE TRANSFORMER MUST BE CHANGED.
2. RELAYS MUST BE CHANGED AS REQUIRED BY PUMP MANUFACTURER AND ADJUSTED TO RECOMMENDED SETTINGS.
3. ALL CONTROL WIRING AND 12-18 AWG SHALL BE STRANDED TIN-PLATED COPPER WIRE. APPLY DIELECTRIC GREASE TO ENDS TO PREVENT CORROSION.
4. ALL WIRES IN CONTROL PANEL SHALL BE TERMINATED WITH FERRULES.
5. ALL WIRES TERMINATING AT PLC RACK MUST BE ROUTED THROUGH WIREWAY FROM BELOW.
6. ALL ANALOG SIGNAL WIRING SHALL BE SHIELDED CABLE.
7. THIS DRAWING IS FOR A DUPLEX PUMP STATION. TRIPLEX PUMP STATIONS REQUIRE ADDITIONAL PUMP CONTROLS.

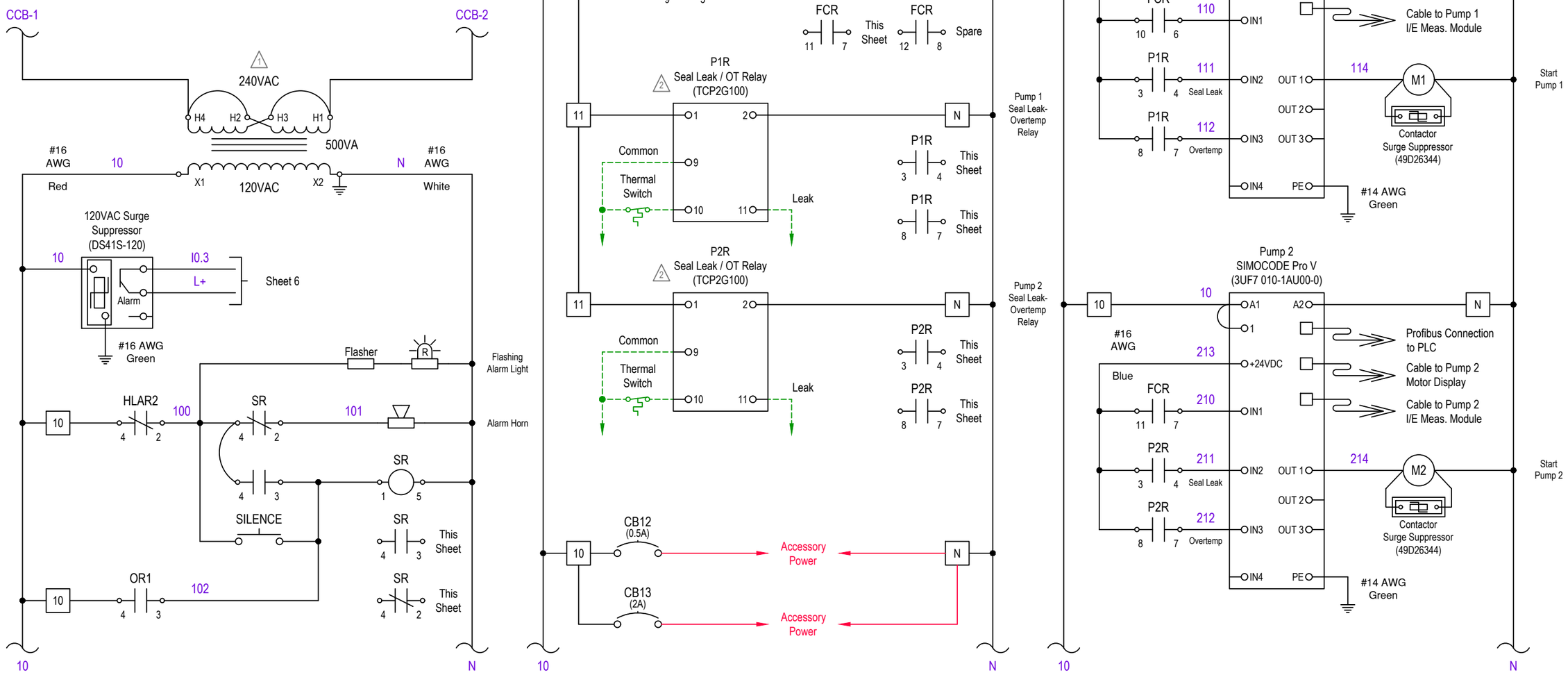

NO.	BY	DATE	REVISIONS
6.			
5.			
4.			
3.			
2.			
1.			

ELECTRICAL SCHEMATIC

MANUFACTURER
ADDRESS1
ADDRESS2

CONTACT_NAME
CONTACT_NUMBER

JEA Building Community sm

DESIGNER:
DRAWN BY:
DATE:
CHECKED BY:
DATE:
2021 STANDARD PACKAGE, REV. 1

SHEET TITLE: 120 VAC VOLTAGE

PROJECT: --- PROJECT NAME ---

ACROSS THE LINE LIFT STATION DIAGRAM

JOB No: 12345678

SHEET 4 OF 10

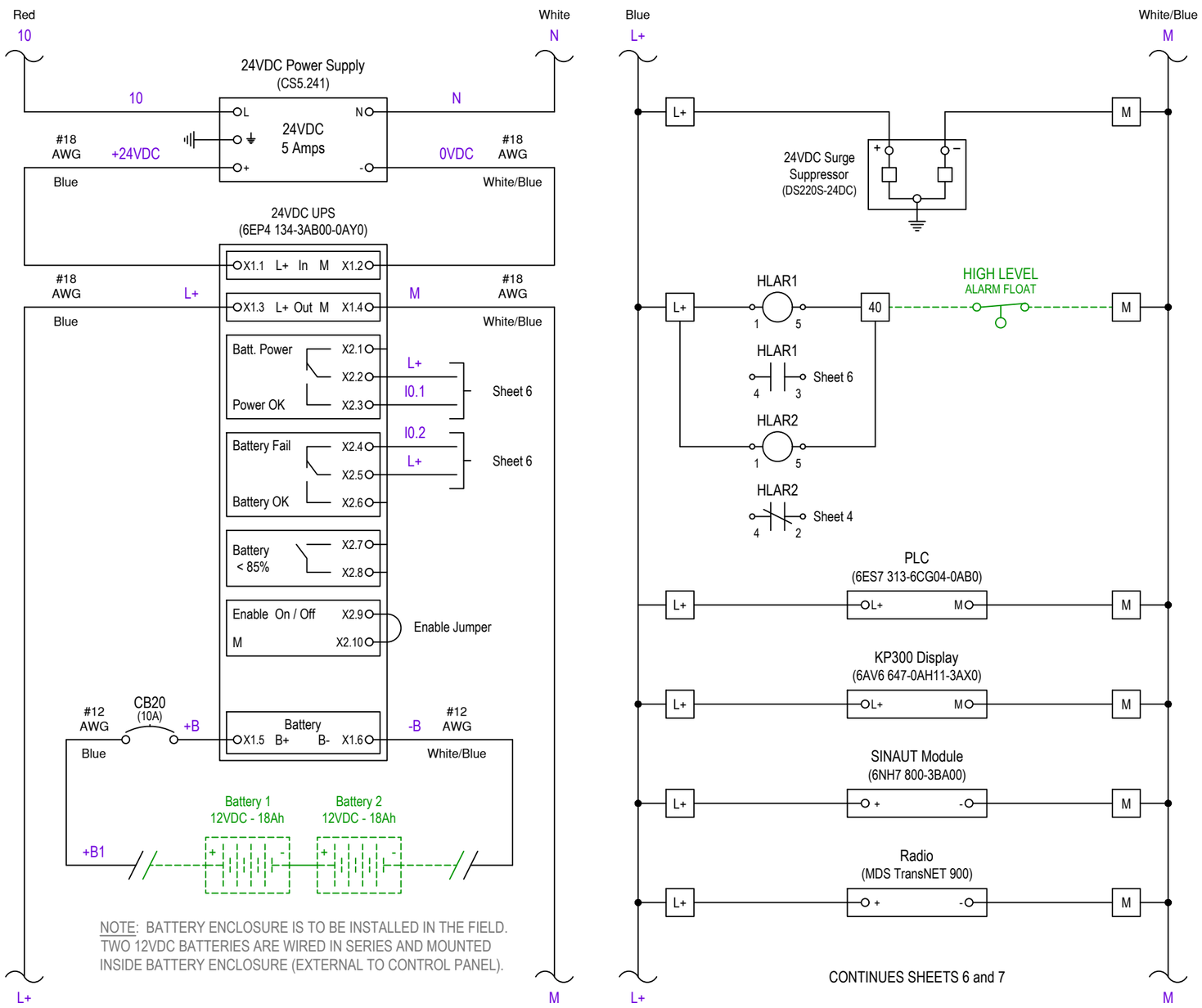

NOTE: BATTERY ENCLOSURE IS TO BE INSTALLED IN THE FIELD. TWO 12VDC BATTERIES ARE WIRED IN SERIES AND MOUNTED INSIDE BATTERY ENCLOSURE (EXTERNAL TO CONTROL PANEL).

NO.	BY	DATE	REVISIONS
6.			
5.			
4.			
3.			
2.			
1.			

ELECTRICAL SCHEMATIC

MANUFACTURER
ADDRESS1
ADDRESS2

CONTACT_NAME
CONTACT_NUMBER

JEA Building Community sm

DESIGNER:
DRAWN BY:
DATE:
CHECKED BY:
DATE:
2021 STANDARD PACKAGE, REV. 1

SHEET TITLE: 24 DCV VOLTAGE
PROJECT: --- PROJECT NAME ---
ACROSS THE LINE LIFT STATION DIAGRAM
JOB No: 12345678
SHEET 5 OF 10

RACK: 0 SLOT: 4

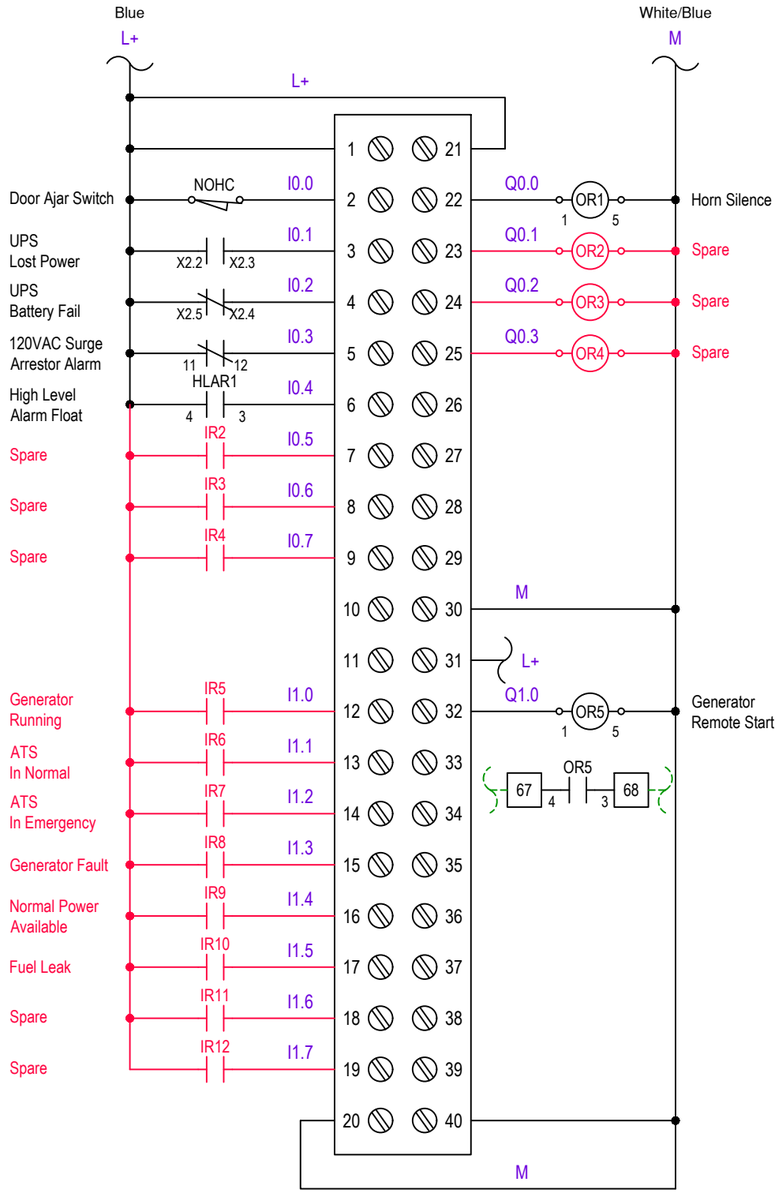

6ES7 313-6CG04-0AB0	
16 Digital Input - 16 Relay Out	
1	1L+ = +24V
2	Input 0.0
3	Input 0.1
4	Input 0.2
5	Input 0.3
6	Input 0.4
7	Input 0.5
8	Input 0.6
9	Input 0.7
10	
11	
12	Input 1.0
13	Input 1.1
14	Input 1.2
15	Input 1.3
16	Input 1.4
17	Input 1.5
18	Input 1.6
19	Input 1.7
20	1M = DC COM
21	2L+ = +24V
22	Output 0.0
23	Output 0.1
24	Output 0.2
25	Output 0.3
26	Output 0.4
27	Output 0.5
28	Output 0.6
29	Output 0.7
30	2M = DC COM
31	3L+ = +24V
32	Output 1.0
33	Output 1.1
34	Output 1.2
35	Output 1.3
36	Output 1.4
37	Output 1.5
38	Output 1.6
39	Output 1.7
40	3M = DC COM

RACK: - SLOT: -

NO.	BY	DATE	REVISIONS
6.			
5.			
4.			
3.			
2.			
1.			

ELECTRICAL SCHEMATIC

MANUFACTURER
ADDRESS1
ADDRESS2

CONTACT_NAME
CONTACT_NUMBER

JEA Building Community sm

DESIGNER:
DRAWN BY:
DATE:
CHECKED BY:
DATE:
2021 STANDARD PACKAGE, REV. 1

SHEET TITLE: PLC DIGITAL I/O

PROJECT: --- PROJECT NAME ---
ACROSS THE LINE LIFT STATION DIAGRAM

JOB No: 12345678

SHEET 6 OF 10

RACK: 0 SLOT: 5

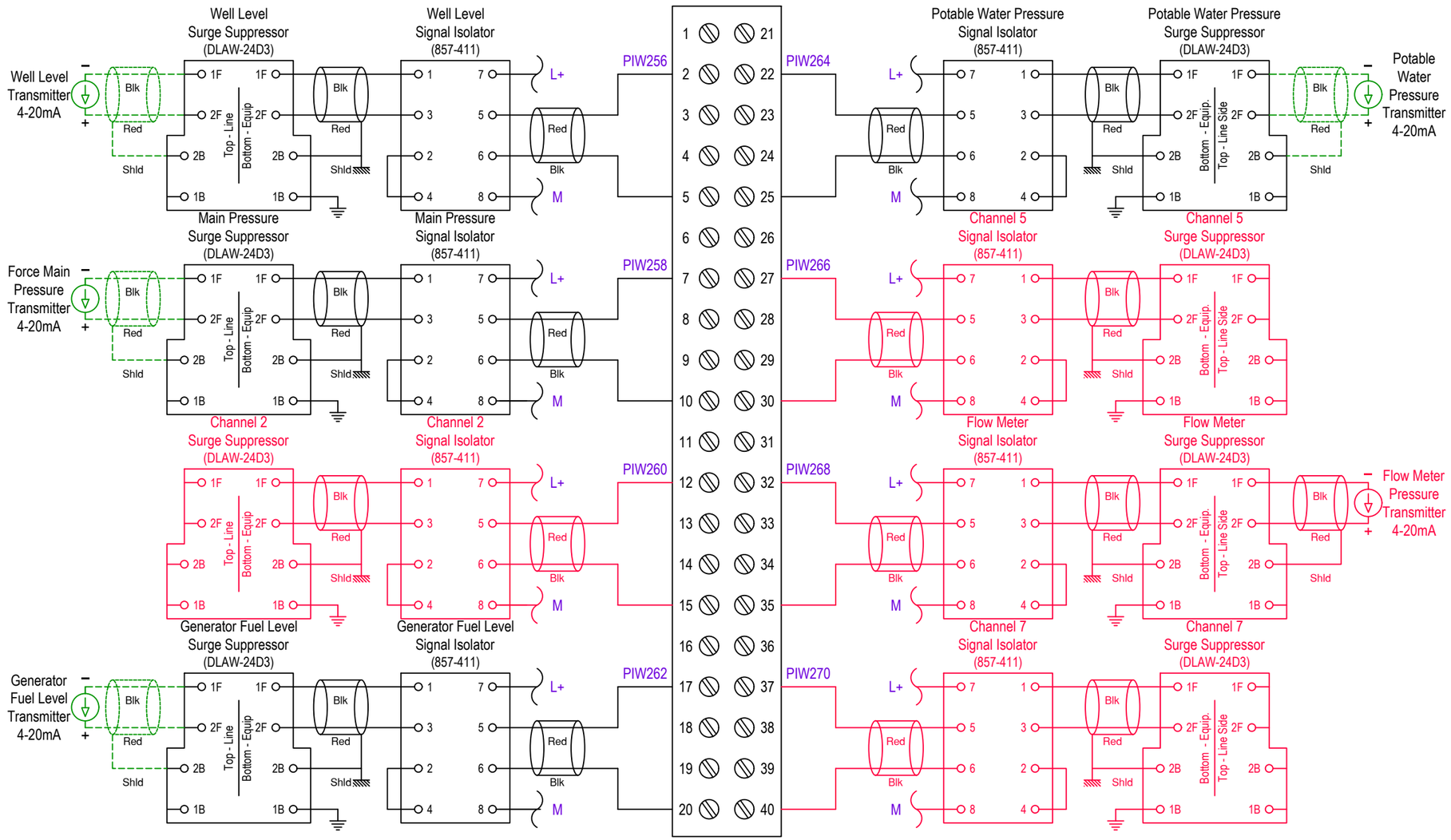

6ES7 331-1KF02-0AB0	
8 Input Analog	
1	U+ = > CH0 - PIW256
2	I +
3	S -
4	M +
5	M -
6	U+ = > CH1 - PIW258
7	I +
8	S -
9	M +
10	M -
11	U+ = > CH2 - PIW260
12	I +
13	S -
14	M +
15	M -
16	U+ = > CH3 - PIW262
17	I +
18	S -
19	M +
20	M -
21	U+ = > CH4 - PIW264
22	I +
23	S -
24	M +
25	M -
26	U+ = > CH5 - PIW266
27	I +
28	S -
29	M +
30	M -
31	U+ = > CH6 - PIW268
32	I +
33	S -
34	M +
35	M -
36	U+ = > CH7 - PIW270
37	I +
38	S -
39	M +
40	M -

NO.	BY	DATE	REVISIONS
6.			
5.			
4.			
3.			
2.			
1.			

ELECTRICAL SCHEMATIC

MANUFACTURER
ADDRESS1
ADDRESS2

CONTACT_NAME
CONTACT_NUMBER

JEA Building Community sm

DESIGNER:
DRAWN BY:
DATE:
CHECKED BY:
DATE:
2021 STANDARD PACKAGE, REV. 1

SHEET TITLE: PLC ANALOG INPUT
PROJECT: --- PROJECT NAME ---
ACROSS THE LINE LIFT STATION DIAGRAM
JOB No: 12345678
SHEET 7 OF 10

RACK: 0 SLOT: 6

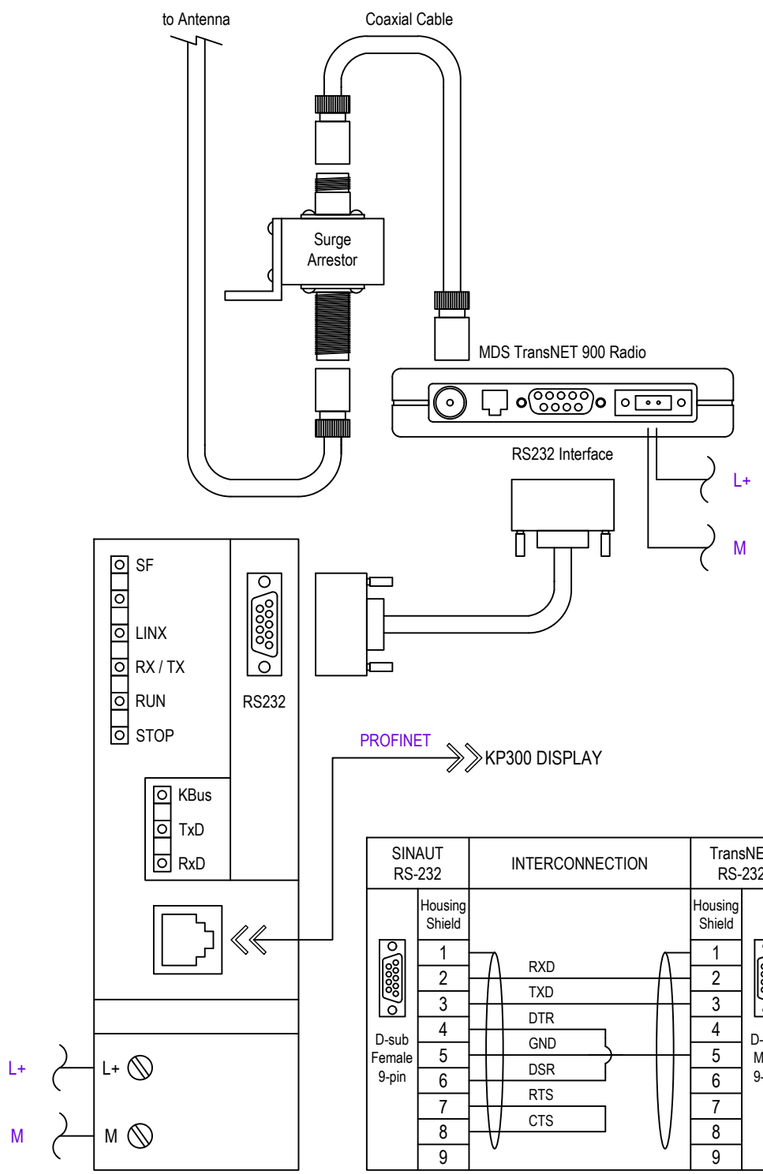

6NH7 800-3BA00	
SINAUT - > TIM3V-IE	
	RS-232 PIN OUT
1	DCD - Input
2	RXD - Input
3	TXD - Output
4	DTR - Output
5	GND
6	--
7	RTS - Output
8	CTS - Input
	RJ-45 PIN OUT
1	TXD+ - > Output
2	TXD- - > Output
3	RXD+ - > Input
4	--
5	--
6	RXD- - > Input
7	--
8	--
	Power Connector
L+	+ 24VDC
M	DC Common

SIMOCODE Bus Connection Diagram

(Typical for each Pump)

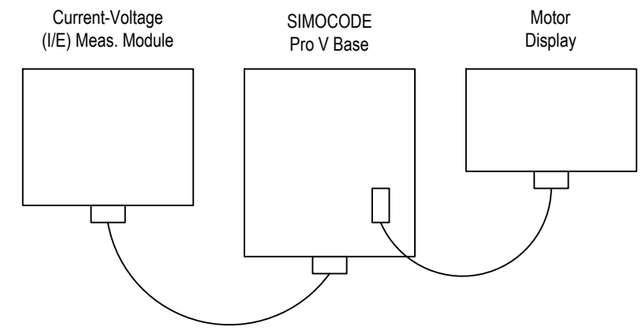

Profibus Connection Diagram

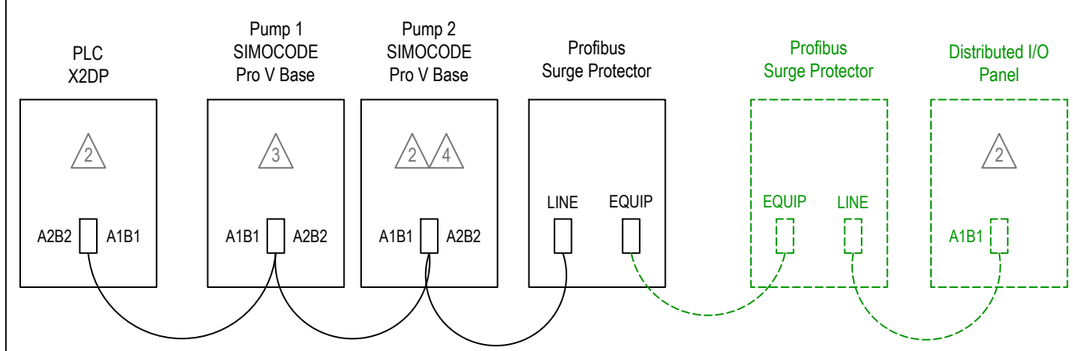

GENERAL NOTES:

1. ALL PLC I/O WIRING SHALL BE #18 AWG. APPLY DIELECTRIC GREASE TO ENDS TO PREVENT CORROSION.
2. SET PROFIBUS CONNECTOR RESISTOR SWITCH TO THE "ON" POSITION.
3. SET PROFIBUS CONNECTOR RESISTOR SWITCH TO THE "OFF" POSITION.
4. SET PROFIBUS CONNECTOR RESISTOR SWITCH TO THE "OFF" POSITION IF A DISTRIBUTED I/O PANEL IS PRESENT.

NO.	BY	DATE	REVISIONS
6.			
5.			
4.			
3.			
2.			
1.			

ELECTRICAL SCHEMATIC

MANUFACTURER
ADDRESS1
ADDRESS2

CONTACT_NAME
CONTACT_NUMBER

JEA sm Building Community sm

DESIGNER:
DRAWN BY:
DATE:
CHECKED BY:
DATE:
2021 STANDARD PACKAGE, REV. 1

SHEET TITLE: PLC & RADIO CONNECTION

PROJECT: --- PROJECT NAME ---
ACROSS THE LINE LIFT STATION DIAGRAM

JOB No: 12345678

SHEET 8 OF 10

GENERAL NOTES:

1. ALL TERMINALS, RELAYS, SURGE SUPPRESSORS, BREAKERS, AND OTHER DEVICES MUST BE LABELED.
2. INSTALL PLUGGABLE JUMPERS (Y) ON TERMINALS WHERE INDICATED. APPLY DIELECTRIC GREASE TO JUMPERS TO PREVENT CORROSION.
3. ALL WIRES IN CONTROL PANEL SHALL BE TERMINATED WITH FERRULES.

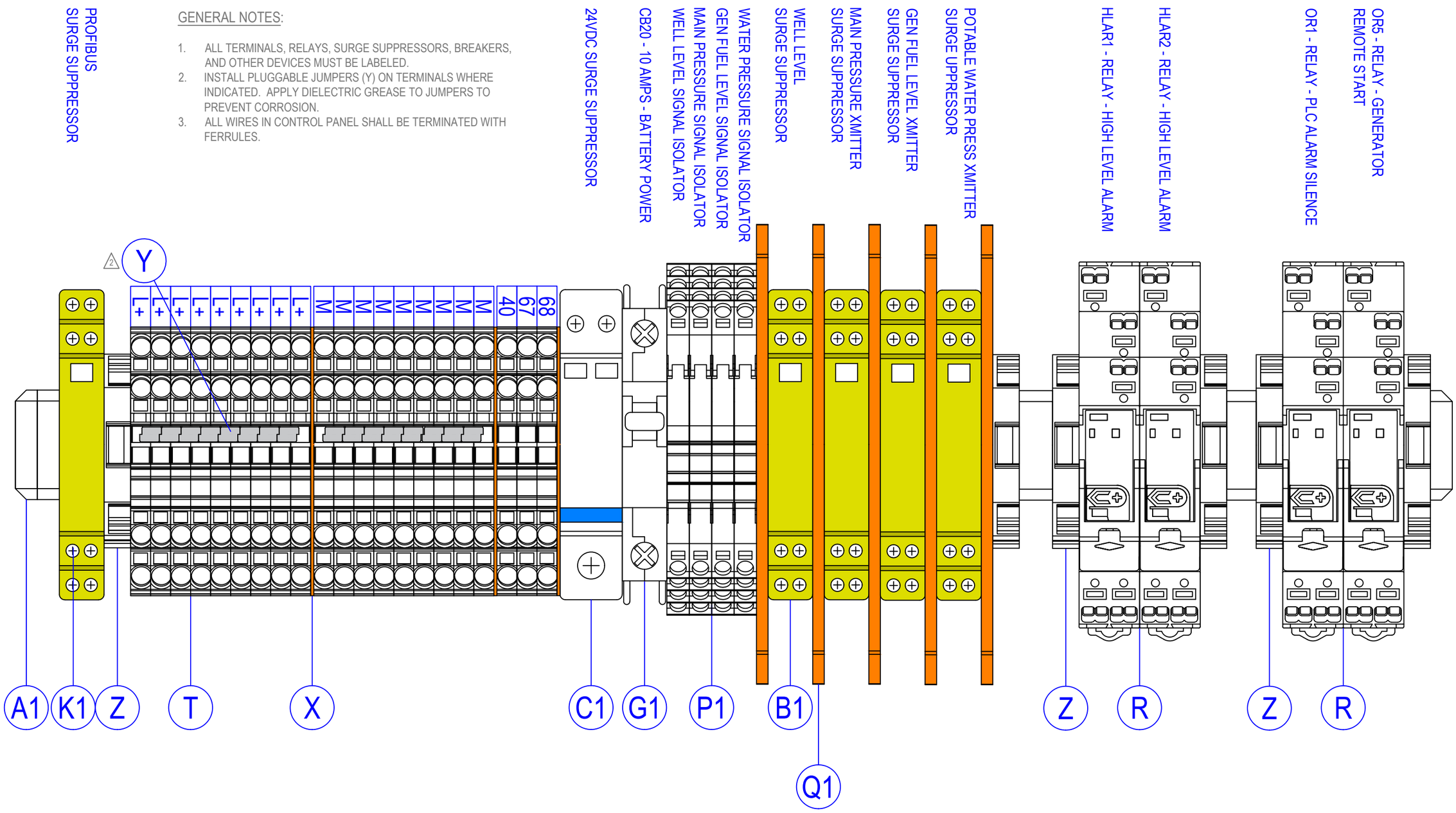

NO.	BY	DATE	REVISIONS
6.			
5.			
4.			
3.			
2.			
1.			

ELECTRICAL SCHEMATIC

MANUFACTURER
ADDRESS1
ADDRESS2

CONTACT_NAME
CONTACT_NUMBER

JEA sm
Building Community sm

DESIGNER:
DRAWN BY:
DATE:
CHECKED BY:
DATE:
2021 STANDARD PACKAGE, REV. 1

SHEET TITLE: 24 VDC TERMINAL BLOCK LAYOUT

PROJECT: --- PROJECT NAME ---
ACROSS THE LINE LIFT STATION DIAGRAM

JOB No: 12345678

SHEET 9 OF 10

GENERAL NOTES:

1. ALL TERMINALS, RELAYS, SURGE SUPPRESSORS, BREAKERS, AND OTHER DEVICES MUST BE LABELED.
2. INSTALL PLUGGABLE JUMPERS (Y) ON TERMINALS WHERE INDICATED. APPLY DIELECTRIC GREASE TO JUMPERS TO PREVENT CORROSION.
3. ALL WIRES IN CONTROL PANEL SHALL BE TERMINATED WITH FERRULES.
4. RELAYS MUST BE CHANGED AS REQUIRED BY PUMP MANUFACTURER AND ADJUSTED TO RECOMMENDED SETTINGS. SPACE RESERVED ON DIN RAIL TO ACCOMODATE LARGER RELAYS AS APPLICABLE.

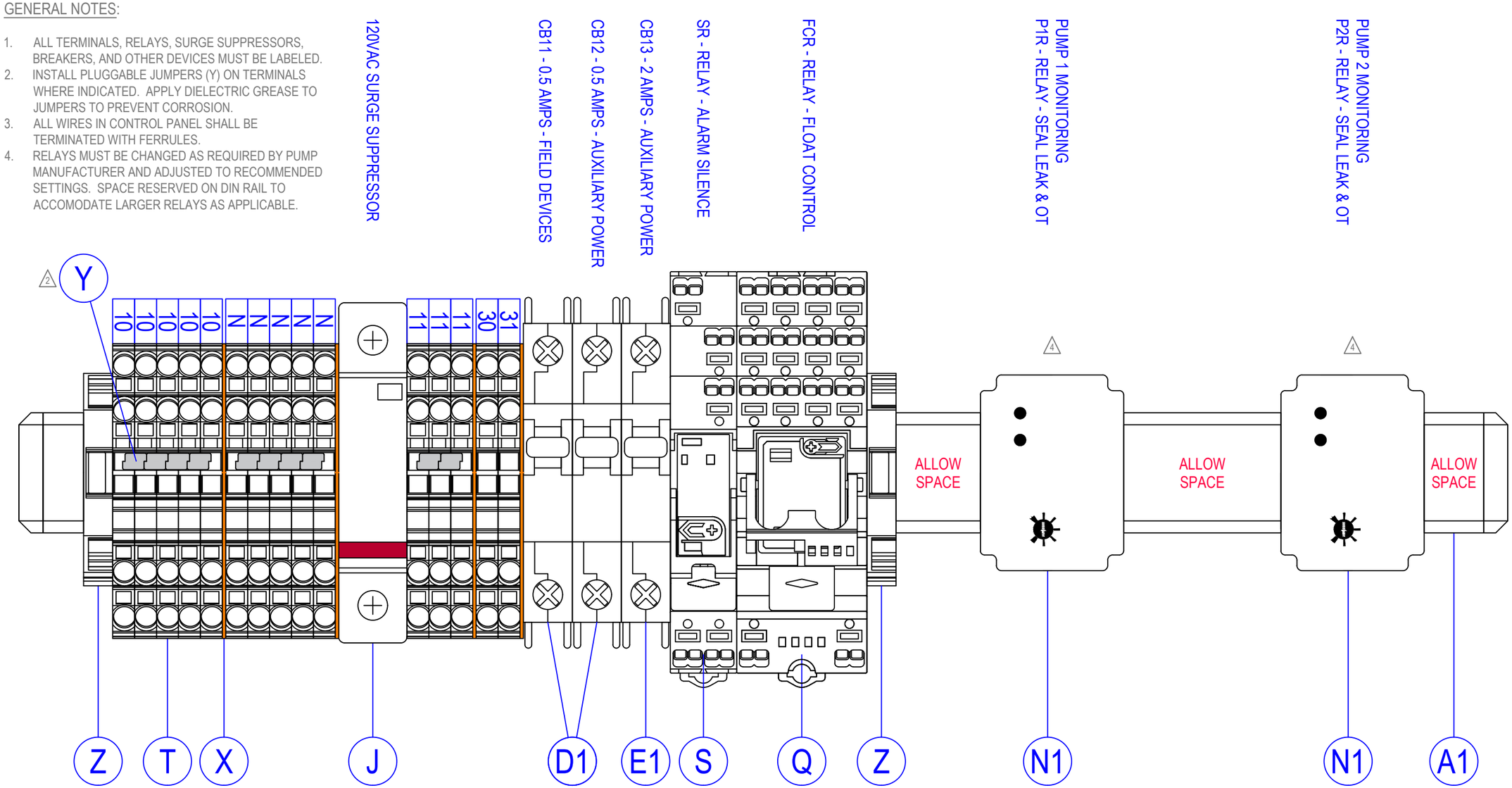

NO.	BY	DATE	REVISIONS
6.			
5.			
4.			
3.			
2.			
1.			

ELECTRICAL SCHEMATIC

MANUFACTURER
ADDRESS1
ADDRESS2

CONTACT_NAME
CONTACT_NUMBER

JEA Building Community sm

DESIGNER:	
DRAWN BY:	
DATE:	
CHECKED BY:	
DATE:	
2021 STANDARD PACKAGE, REV. 1	

SHEET TITLE: 120 VAC TERMINAL BLOCK LAYOUT

PROJECT: --- PROJECT NAME ---

ACROSS THE LINE LIFT STATION DIAGRAM

JOB No: 12345678

SHEET 10 OF 10

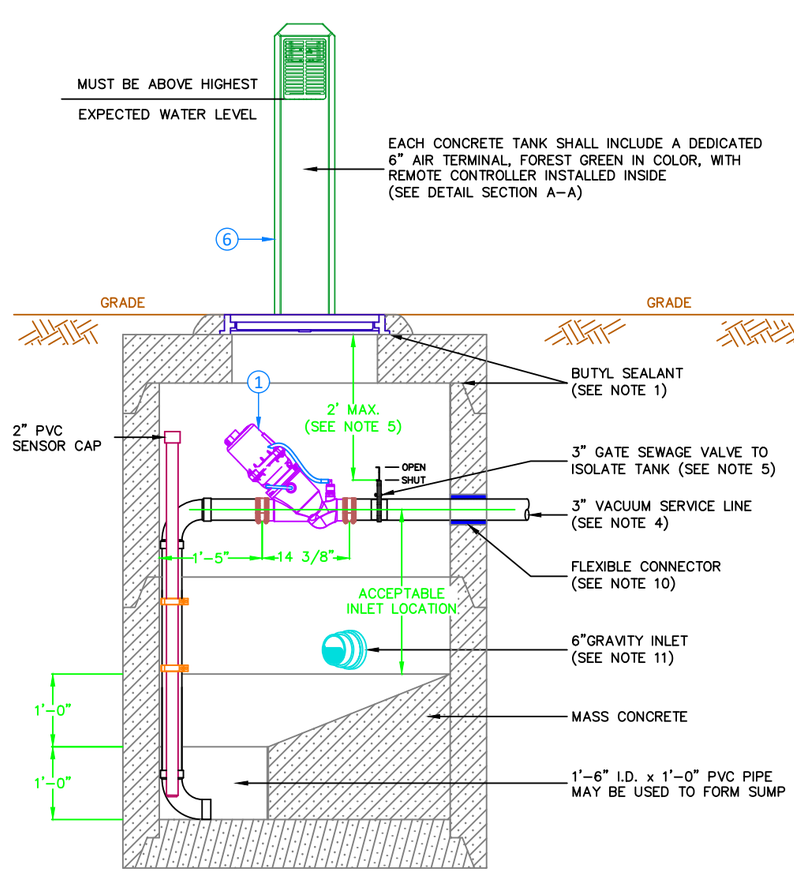

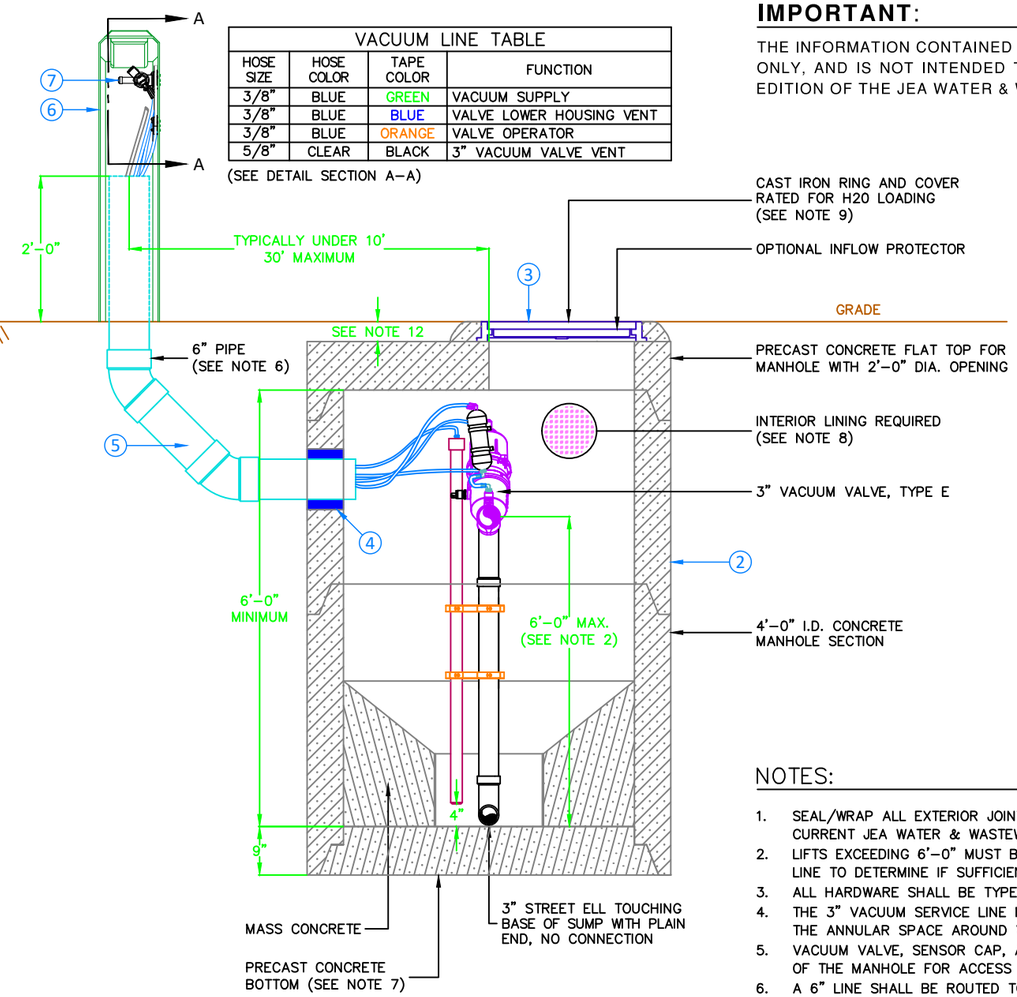

IMPORTANT:

THE INFORMATION CONTAINED IN THIS DRAWING IS FOR INFORMATIONAL PURPOSES ONLY, AND IS NOT INTENDED TO BE ALL INCLUSIVE. IN ALL CASES, THE CURRENT EDITION OF THE JEA WATER & WASTEWATER STANDARDS MANUAL SHALL PREVAIL.

VACUUM LINE TABLE

HOSE SIZE	HOSE COLOR	TAPE COLOR	FUNCTION
3/8"	BLUE	GREEN	VACUUM SUPPLY
3/8"	BLUE	BLUE	VALVE LOWER HOUSING VENT
3/8"	BLUE	ORANGE	VALVE OPERATOR
5/8"	CLEAR	BLACK	3" VACUUM VALVE VENT

(SEE DETAIL SECTION A–A)

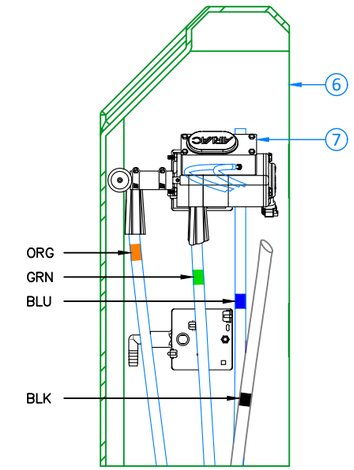

SECTION 'A'–'A'

AIR TERMINAL DETAIL

NOT TO SCALE

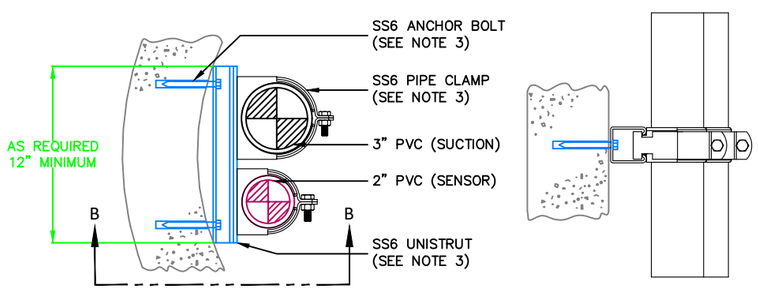

PLAN VIEW

SECTION 'B'–'B'

CONCRETE TANK PIPE ANCHOR DETAIL

NOT TO SCALE

No.	DESCRIPTION
1	3" VACUUM VALVE, TYPE "E"
2	"VACPOD" STANDARD CONCRETE TANK
3	MANHOLE RING AND COVER (SEE NOTE 9)
4	6" FLEXIBLE CONNECTOR (SEE NOTE 10)
5	6" SCH40 PVC PIPE (SEE NOTE 6)
6	ONE–PIECE MOLDED AIR TERMINAL, FOREST GREEN IN COLOR, WITH REMOTE CONTROLLER KIT
7	REMOTE VACUUM CONTROLLER

NOTES:

1. SEAL/WRAP ALL EXTERIOR JOINTS IN ACCORDANCE WITH JEA STANDARDS. REFER TO CURRENT JEA WATER & WASTEWATER MANUAL. CONCRETE TANK UNIT MUST BE WATER TIGHT.
2. LIFTS EXCEEDING 6'–0" MUST BE ADDED TO HEAD LOSSES ON VACUUM MAIN AND SERVICE LINE TO DETERMINE IF SUFFICIENT VACUUM HEAD IS AVAILABLE.
3. ALL HARDWARE SHALL BE TYPE 316 STAINLESS STEEL (INDICATED BY "SS6").
4. THE 3" VACUUM SERVICE LINE MUST CONNECT DIRECTLY TO A 6" MINIMUM VACUUM MAIN. THE ANNULAR SPACE AROUND VACUUM LINES MUST BE SEALED.
5. VACUUM VALVE, SENSOR CAP, AND GATE VALVE SHALL BE LOCATED WITHIN 24" OF THE TOP OF THE MANHOLE FOR ACCESS AND MAINTENANCE.
6. A 6" LINE SHALL BE ROUTED TO THE VACUUM VALVE PIT USING SCH 40 OR SDR 26 PVC PIPE, INSTALLED WITH PROPER SLOPE (MINIMUM 0.2%) AND BEDDING TO PREVENT POCKETS OR BELLIES.
7. BACK FILL AND COMPACTION SHALL ADHERE TO JEA STANDARDS. REFER TO CURRENT JEA WATER & WASTEWATER MANUAL.
8. INTERIOR OF CONCRETE STRUCTURE SHALL BE COATED FOR PROTECTION AGAINST INFILTRATION AND CORROSION WITH SpectraShield®SPRAY–ON LINING OR JEA APPROVED EQUAL.
9. MANHOLE RING AND COVER SHALL MEET JEA STANDARDS. REFER TO CURRENT JEA WATER & WASTEWATER MANUAL. COVER SHALL BE STAMPED "JEA."
10. GROUT ALL WALL PENETRATIONS INSIDE AND OUTSIDE. ALL CONNECTIONS SHALL BE IN COMPLIANCE WITH JEA WATER & SEWER STANDARDS DETAIL S–15.
11. THE 6" GRAVITY INLET MUST BE LOCATED BETWEEN THE VACUUM SERVICE LINE ℄ AND THE START OF THE SLOPE TO SUMP. THE ANNULAR SPACE AROUND THE INLET MUST BE SEALED.
12. VACPOD SHALL BE TRAFFIC RATED. NO MINIMUM COVER REQUIRED IN NON–ROAD TRAFFIC APPLICATIONS. VACPOD APPLICATIONS AS DEPICTED IN THIS DRAWING ARE FOR DRIVEWAY USE ONLY AND ARE NOT TO BE INSTALLED IN STREETS OR HIGHWAYS.

NO.	BY	DATE	REVISIONS
6.			
5.			
4.			
3.			
2.			
1.	DS	04/10/2020	STANDARD DRAWING FOR JEA VACPOD APPLICATIONS

JEA STANDARD VACPOD CONCRETE TANK WITH REMOTE CONTROLLER FOR DRIVEWAY USE ONLY

JEA Building Community sm

DESIGNER:	DV
DRAWN BY:	DS
DATE:	04/10/2020
CHECKED BY:	DV
DATE:	04/10/2020
2020 STANDARD VACPOD - REV. 1	

SHEET TITLE: JEA STANDARD VacPod

PROJECT: VACPOD CONCRETE TANK WITH REMOTE CONTROLLER

JOB No: .

SHEET 1 OF 1

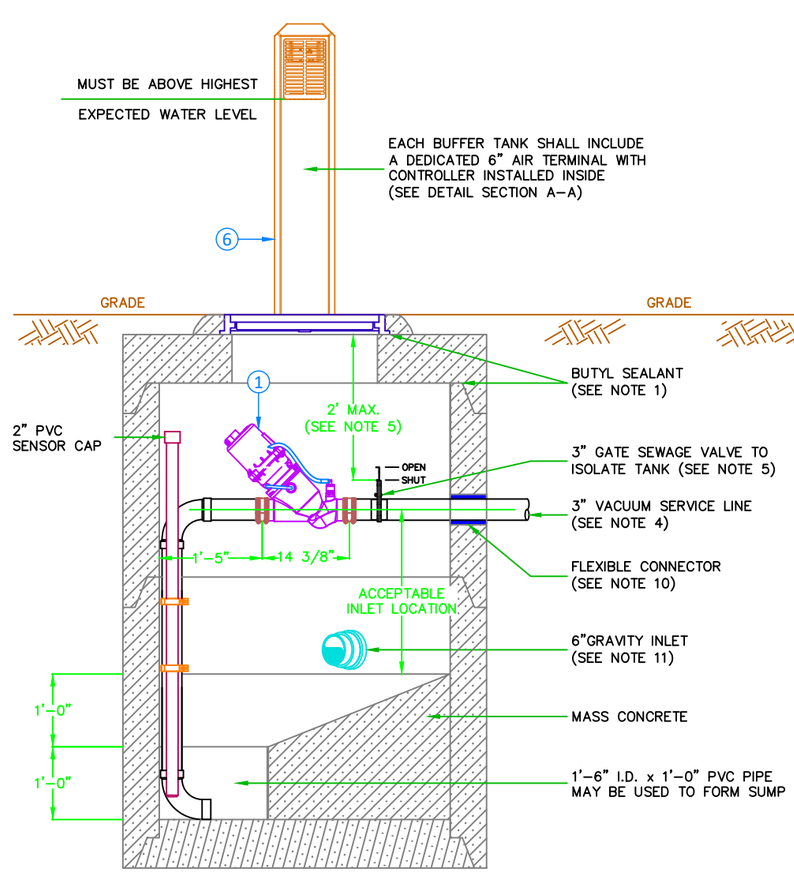

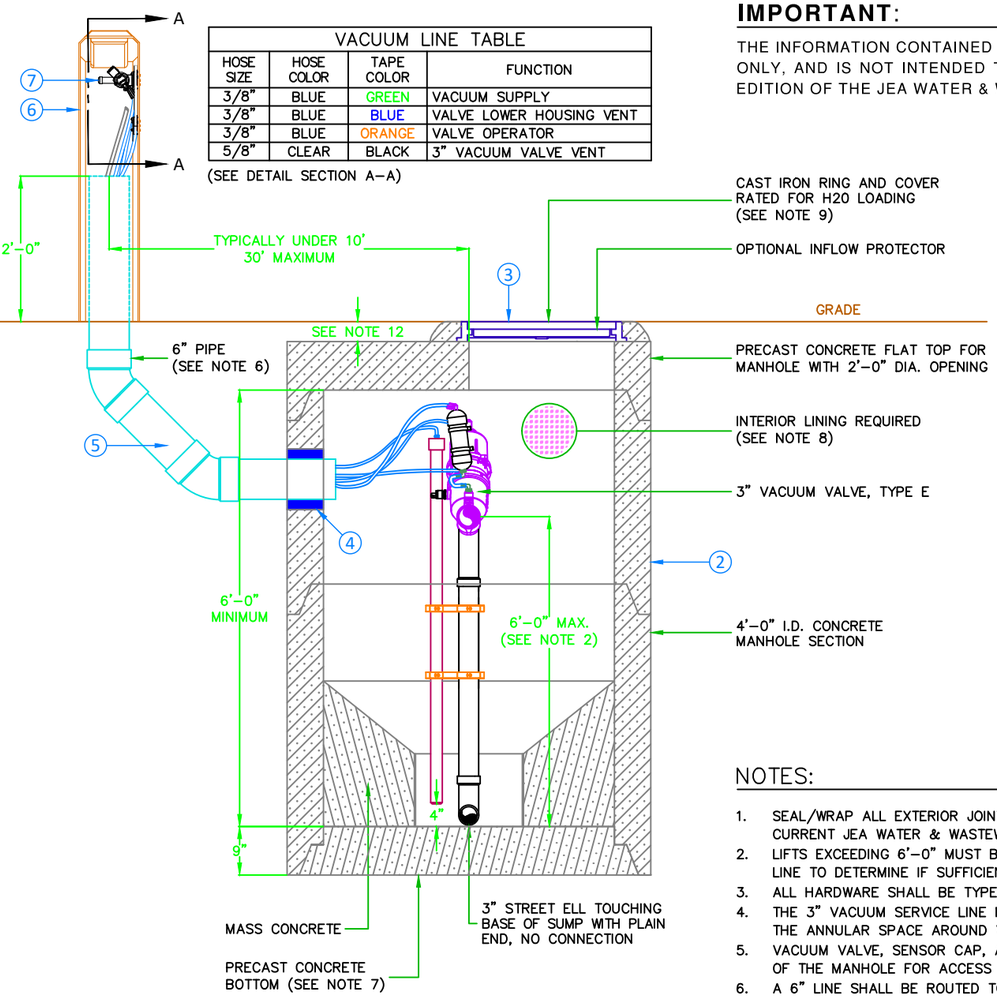

VACUUM LINE TABLE			
HOSE SIZE	HOSE COLOR	TAPE COLOR	FUNCTION
3/8"	BLUE	GREEN	VACUUM SUPPLY
3/8"	BLUE	BLUE	VALVE LOWER HOUSING VENT
3/8"	BLUE	ORANGE	VALVE OPERATOR
5/8"	CLEAR	BLACK	3" VACUUM VALVE VENT

(SEE DETAIL SECTION A–A)

IMPORTANT:

THE INFORMATION CONTAINED IN THIS DRAWING IS FOR INFORMATIONAL PURPOSES ONLY, AND IS NOT INTENDED TO BE ALL INCLUSIVE. IN ALL CASES, THE CURRENT EDITION OF THE JEA WATER & WASTEWATER STANDARDS MANUAL SHALL PREVAIL.

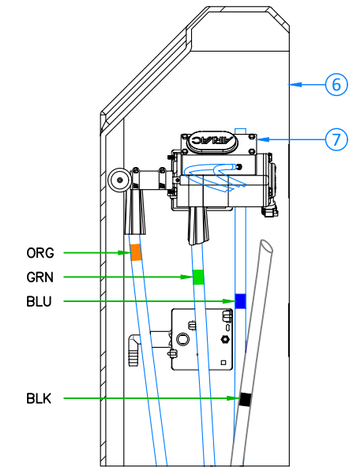

SECTION 'A'–'A'

AIR TERMINAL DETAIL

NOT TO SCALE

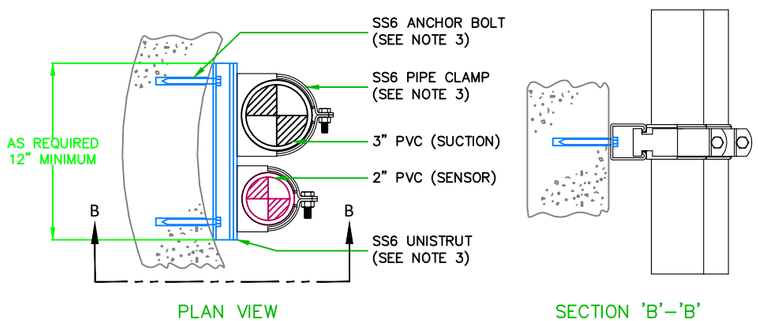

PLAN VIEW

SECTION 'B'–'B'

SINGLE BUFFER TANK PIPE ANCHOR DETAIL

NOT TO SCALE

No.	DESCRIPTION
1	3" VACUUM VALVE, TYPE "E"
2	"VACPOD" STANDARD CONCRETE BUFFER TANK
3	MANHOLE RING AND COVER (SEE NOTE 9)
4	6" FLEXIBLE CONNECTOR (SEE NOTE 10)
5	6" SCH40 PVC PIPE (SEE NOTE 6)
6	ONE–PIECE MOLDED AIR TERMINAL REMOTE CONTROLLER KIT
7	REMOTE VACUUM CONTROLLER

NOTES:

1. SEAL/WRAP ALL EXTERIOR JOINTS IN ACCORDANCE WITH JEA STANDARDS. REFER TO CURRENT JEA WATER & WASTEWATER MANUAL. BUFFER TANK UNIT MUST BE WATER TIGHT.
2. LIFTS EXCEEDING 6'–0" MUST BE ADDED TO HEAD LOSSES ON VACUUM MAIN AND SERVICE LINE TO DETERMINE IF SUFFICIENT VACUUM HEAD IS AVAILABLE.
3. ALL HARDWARE SHALL BE TYPE 316 STAINLESS STEEL (INDICATED BY "SS6").
4. THE 3" VACUUM SERVICE LINE MUST CONNECT DIRECTLY TO A 6" MINIMUM VACUUM MAIN. THE ANNULAR SPACE AROUND VACUUM LINES MUST BE SEALED.
5. VACUUM VALVE, SENSOR CAP, AND GATE VALVE SHALL BE LOCATED WITHIN 24" OF THE TOP OF THE MANHOLE FOR ACCESS AND MAINTENANCE.
6. A 6" LINE SHALL BE ROUTED TO THE VACUUM VALVE PIT USING SCH 40 OR SDR 26 PVC PIPE, INSTALLED WITH PROPER SLOPE (MINIMUM 0.2%) AND BEDDING TO PREVENT POCKETS OR BELLIES.
7. BACK FILL AND COMPACTION SHALL ADHERE TO JEA STANDARDS. REFER TO CURRENT JEA WATER & WASTEWATER MANUAL.
8. INTERIOR OF CONCRETE STRUCTURE SHALL BE COATED FOR PROTECTION AGAINST INFILTRATION AND CORROSION WITH SpectraShield®SPRAY–ON LINING OR JEA APPROVED EQUAL.
9. MANHOLE RING AND COVER SHALL MEET JEA STANDARDS. REFER TO CURRENT JEA WATER & WASTEWATER MANUAL. COVER SHALL BE STAMPED "JEA."
10. GROUT ALL WALL PENETRATIONS INSIDE AND OUTSIDE. ALL CONNECTIONS SHALL BE IN COMPLIANCE WITH JEA WATER & SEWER STANDARDS DETAIL S–15.
11. THE 6" GRAVITY INLET MUST BE LOCATED BETWEEN THE VACUUM SERVICE LINE ℄ AND THE START OF THE SLOPE TO SUMP. THE ANNULAR SPACE AROUND THE INLET MUST BE SEALED.
12. VACPOD SHALL BE TRAFFIC RATED. NO MINIMUM COVER REQUIRED IN NON–ROAD TRAFFIC APPLICATIONS SUCH AS DRIVEWAYS AND GRASSY AREAS. VACPOD APPLICATIONS AS DEPICTED IN THIS DRAWING ARE NOT TO BE INSTALLED IN STREETS OR HIGHWAYS.

NO.	BY	DATE	REVISIONS
6.			
5.			
4.			
3.			
2.			
1.	DS	04/06/2020	STANDARD DRAWING FOR JEA VacPod APPLICATIONS

JEA STANDARD VacPod
CONCRETE SINGLE BUFFER TANK
WITH REMOTE CONTROLLER

JEA Building Community sm

DESIGNER:	DV
DRAWN BY:	DS
DATE:	04/06/2020
CHECKED BY:	DV
DATE:	04/06/2020
2020 STANDARD VacPod - REV. 1	

SHEET TITLE: JEA STANDARD VacPod

PROJECT: SINGLE CONCRETE BUFFER TANK WITH REMOTE CONTROLLER

JOB No: .

SHEET 1 OF 1