Drawing Name	Drawing Title	Revision	Date Sent
PI2026CV1	COVER SHEET	2	7.1.26
PI2026CP1	CONDUIT PLAN	2	7.1.26
PI2026CD1, SH.1	CONDUIT DETAILS	1	7.1.26
PI2026CD1, SH.2	CONDUIT DETAILS	2	7.1.26
PI2026FP1	FOUNDATION PLAN	1	7.1.26
PI2026LV1	LOW VOLTAGE	1	7.1.26
PI2026MD1	MISCELLANEOUS DETAILS	0	7.1.26
PI2026CT1	CABLE SCHEDULE - INSTALL	1	7.1.26
PI2026CT2	CABLE SCHEDULE - REMOVE	1	7.1.26
PI2026CS1	CONDUIT SCHEDULE	1	7.1.26
PI2026BOM	BILL OF MATERIALS	2	7.1.26

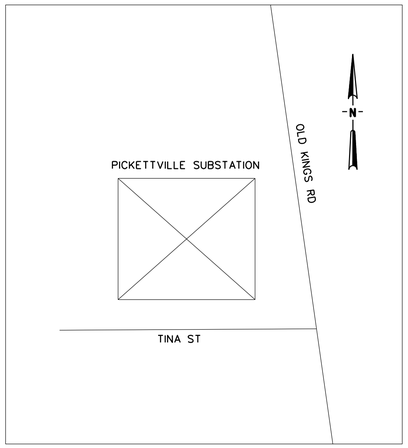

VICINITY MAP

N.T.S.

LOCATION:
6910 OLD KINGS RD, JACKSONVILLE, FL 32219

100% DESIGN DRAWINGS

FOR THE

PICKETTVILLE SUBSTATION AC PANEL REPLACEMENT

BUILDING COMMUNITY

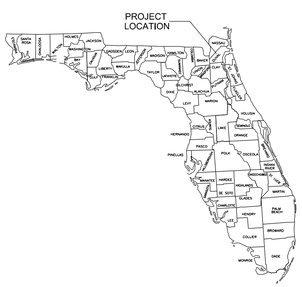

SUBSTATION & TRANSMISSION PROJECTS 20410

PROJECT # 8009726

Digitally signed by Dimitri Santiago
Location: Orlando, FL
Contact Info:
Dimitri.Santiago@Leidos.com
Date: 2026.07.02
00:23:56-04'00'

JEA
BUILDING COMMUNITY
21 W CHURCH ST.
JACKSONVILLE, FLORIDA 32202

ISSUED FOR CONSTRUCTION
LEIDOS - 7.1.26

CONSULTANT INFORMATION

leidos
12901 SCIENCE DRIVE
ORLANDO, FL 32826
CA # 8697

PROFESSIONAL ENGINEER'S SEAL

LATEST REVISION
ORIGINALLY PREPARED UNDER
THE RESPONSIBLE SUPERVISION OF

PE: DIMITRI SANTIAGO
LIC. NO.: 93326
STATE: FL
DATE: 7/1/2026

DIMITRI SANTIAGO JURITY
LICENSE No. 93326 STATE OF FLORIDA PROFESSIONAL ENGINEER

REV	DATE	PROJ #	REVISION DESCRIPTION	BY	REVIEW
1	5.14.26	8009726	UPDATED CONSTRUCTION SEQUENCING & SCHEDULES.	LDOS	LDOS
2	7.1.26	8009726	UPDATED CT CABINET & METER SUPPORT STRUCTURE.	LDOS	LDOS
-	-	-	-	-	-
-	-	-	-	-	-
-	-	-	-	-	-
-	-	-	-	-	-
-	-	-	-	-	-

ENGINEERING	
DATE	3.18.26
BY	LDOS
REVIEW	LDOS
DRAFTING	
DATE	3.18.26
BY	LDOS
REVIEW	LDOS

AC PANEL REPLACEMENT

COVER SHEET

PICKETTVILLE SUBSTATION

SCALE: -

SUBSTATION & TRANSMISSION PROJECTS 20410

PROJ #: 8009726

DRAWING NAME: PI2026CV1.DGN

DRAWING SET: PI2026

DRAWING #: 01 OF 01

JEA ARCH-D 24X36 (08/16)

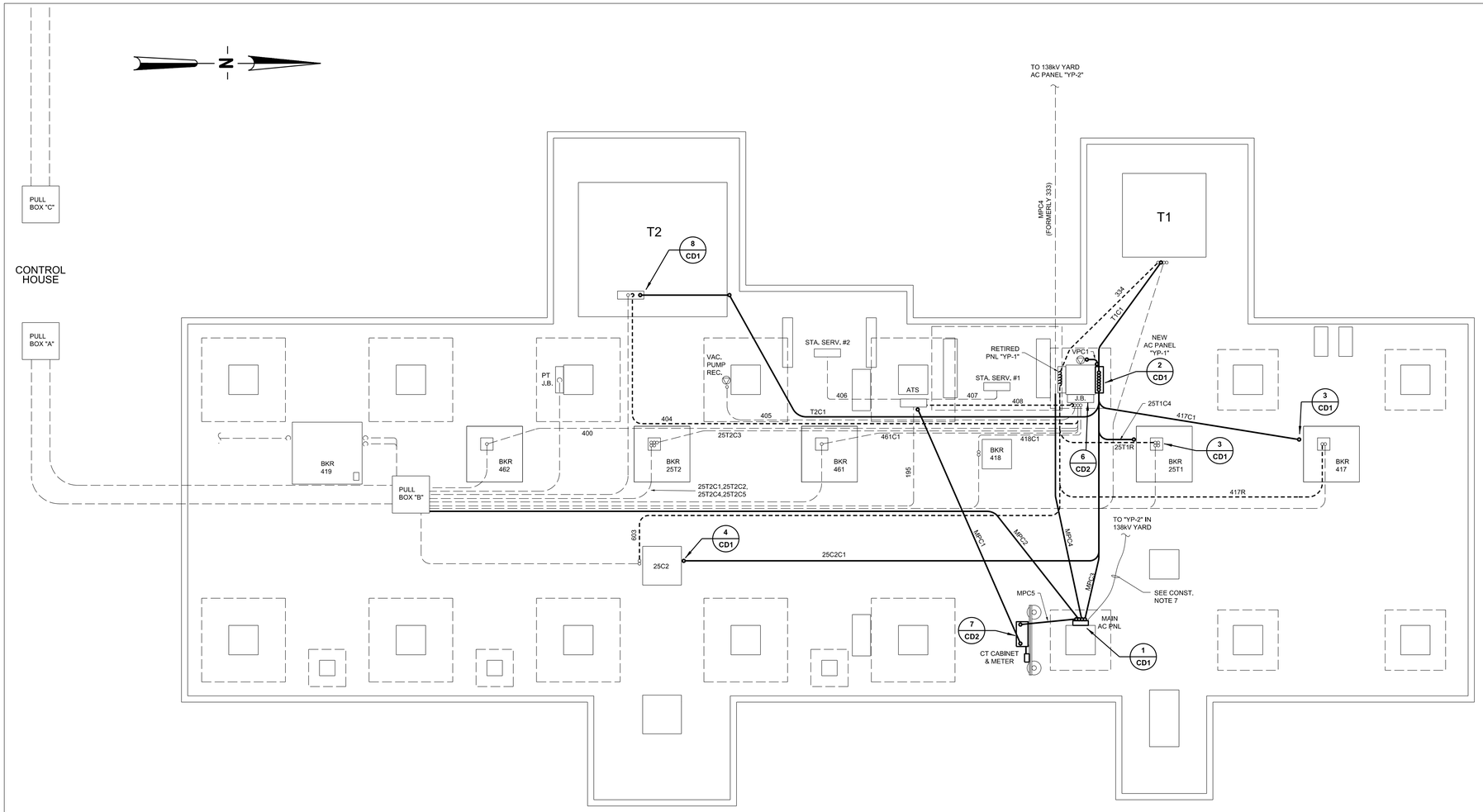

LEGEND:

EXISTING CONDUIT	— — — —
CONDUIT TO BE REMOVED	----------
NEW CONDUIT	————

PRE-OUTAGE CONSTRUCTION ACTIVITIES:

1. EXISTING VACUUM PUMP RECEPTACLE REMOVED FROM THE NORTH FACE OF THE 25KV STRUCTURE LEG (OPPOSITE OF AC PANEL "YP-1").
2. INSTALL MAIN AC PANEL, NEW PANEL “YP-1” AND EQUIPMENT RACK WITH CT CABINET AND METER BOX.
3. CONDUITS MPC1, MPC2, MPC3, MPC5, T1C1, T2C1, 25T1C4, 417C1 AND 25C2C1 AND ASSOCIATED AC SUPPLY CIRCUITS TO BE INSTALLED. REFER TO CONDUIT AND CABLE SCHEDULE DRAWINGS PI2026CS1 AND PI2026CT1. CABLES TO BE TERMINATED AT THE AC PANEL ONLY.
4. TEMPORARY AC SUPPLY FEED FROM THE MAIN AC PANEL TO PANEL “YP-2” IN THE 138KV YARD TO BE INSTALLED. CABLE TO BE ABOVE GRADE AND TERMINATED AT THE MAIN AC PANEL ONLY. CONTRACTOR TO PROVIDE PROTECTION FOR THE ABOVE GRADE TEMPORARY FEED TO "YP-2".

POST-OUTAGE CONSTRUCTION ACTIVITIES TO BE PERFORMED IN SEQUENTIAL ORDER:

5. JEA SUBSTATION MAINTANENCE TO DE-ENERGIZE THE AUTOMATIC TRANSFER SWITCH AND REMOVE THE EXISTING AC SUPPLY FEEDS TO THE SECONDARY PANELS. CIRCUIT AC1 TO BE INSTALLED AT THE LOAD SIDE OF THE ATS (SEE CABLE INSTALL SCHEDULE DRAWING PI2026CT1). AUTOMATIC TRANSFER SWITCH TO BE RE-ENERGIZED.
6. CONTRACTOR TO REMOVE THE EXISTING AC FEEDS AT PANELS “YP-1” AND “LC” AND INSTALL NEW CIRCUITS AC3 AND AC2, RESPECTIVELY. CONTROL HOUSE PANEL "LC" FEED TO BE PRIORITIZED FOLLOWED BY "YP-1". EXISTING AC FEED AT PANEL “YP-2” TO BE REMOVED AND THE TEMPORARY AC FEED FROM THE MAIN PANEL INSTALLED.
7. CONTRACTOR TO TERMINATE THE NEW AC SUPPLY CIRCUITS FOR TRANSFORMERS T1 AND T2, BREAKERS 417 AND 25T1 AND VBM 25C2 IN THE ASSOCIATED EQUIPMENT CABINETS. RETIRED AC SUPPLY CIRCUITS TO BE REMOVED. CONDUITS 334, 404, 603, 417R AND 25T1R TO BE REMOVED.
8. CONTRACTOR TO REROUTE THE EXISTING AC SUPPLY CIRCUITS FOR BREAKERS 418, 461, 462, 25T2 AND VACUUM PUMP RECEPTACLE TO NEW AC PANEL “YP-1” VIA THE AC JUNCTION BOX AND ABOVE GRADE CONDUITS. CIRCUITS TO BE REPLACED IF THE EXISTING LENGTH IS NOT ADEQUATE TO REACH THE NEW AC PANEL (SEE SCHEDULE DRAWINGS PI2026CT1 AND PI2026CT2 AND CONDUIT DETAIL DRAWING PI2026CD1).
9. CONTRACTOR TO INTERCEPT CONDUIT 333 AND ASSOCIATED CIRCUIT FROM PANEL “YP-2” TO THE ATS AND RE-ROUTE TO THE MAIN AC PANEL. NEW CIRCUIT AC4 TO REPLACE THE TEMPORARY FEED TO PANEL “YP-2”. CONDUIT TO BE RENAMED MPC4.
10. CONTRACTOR TO RELOCATE THE VACCUM PUMP RECEPTACLE TO THE WEST FACE OF THE LATTICE STRUCTURE. MOUNTING CHANNELS TO BE REUSED. NEW AC CIRCUIT AND ASSOCIATED CONDUIT VPC1 TO NEW AC PANEL "YP-1" TO BE INSTALLED.

NOTES:

1. THE CONTRACTOR SHALL BE RESPONSIBLE FOR FURNISHING AND INSTALLING ALL CONDUIT, AS LISTED IN THE CONDUIT SCHEDULE.THE CONTRACTOR SHALL BE RESPONSIBLE FOR PULLING ALL CABLES LISTED IN THE CABLE SCHEDULE.
2. THE CONDUIT LOCATIONS SHOWN ON THIS DRAWING ARE APPROXIMATE ONLY. CONDUIT SHALL BE INSTALLED 24" MINIMUM BELOW FINISHED SUBGRADE ELEVATION.
3. ALL ABOVE GRADE CONDUIT SHALL BE ULTRA-VIOLET RESISTANT PVC, SCHEDULE 40. ABOVE GRADE CONDUIT SHALL BE INSTALLED TO CLOSELY CONFORM TO THE FOUNDATION AND STRUCTURE TO WHICH IT IS TO BE MOUNTED.
4. ELBOW RADIUS FOR 2" NON-FIBER OPTIC CONDUITS SHALL BE 24" UNLESS OTHERWISE NOTED.
5. ALL CABLES SHALL BE CLEARLY LABELED AT BOTH ENDS AND AT ALL ENTRANCE AND EXIT POINTS TO THE PULL BOXES. ALL CONDUIT RUNS SHALL ALSO BE CLEARLY LABELED AT BOTH ENDS. REFER TO SPECIFICATION SECTION IX OF THE JEA SUBSTATION STANDARDS REFERENCE MANUAL FOR LABELING DETAILS.
6. AFTER THE INSTALLATION AND BACKFILLING OF THE UNDERGROUND CONDUITS, THE CONTRACTOR SHALL COMPACT THE AREA TO THE SAME DENSITY, AND WITH SIMILAR MATERIAL, AS THE ADJACENT UNDISTURBED MATERIALS.
7. THE CONTRACTOR IS RESPONSIBLE FOR VERIFYING ALL CONDUIT AND CABLE LENGTHS AND LOCATIONS.
8. ALL CONDUIT ENDS SHALL BE PACKED WITH DUCT SEAL TO KEEP THE CONDUIT FREE FROM DIRT AND ALL OTHER FOREIGN MATERIALS.
9. CONTRACTOR SHALL BE RESPONSIBLE FOR VERIFICATION OF ALL CONDUIT ROUTES AND LENGTHS. CONDUIT LENGTHS LISTED IN THE CONDUIT SCHEDULE ARE APPROXIMATE.
10. CLOUDING OMITTED ON THIS DRAWING FOR CLARITY.

REFERENCE DRAWINGS:

PI2026CS1	CONDUIT SCHEDULE
PI2026CD1	CONDUIT DETAILS
PI2026CT1	CABLE SCHEDULE (INSTALL)
PI2026CT2	CABLE SCHEDULE (REMOVE)
PI2026LV1	LOW VOLTAGE
PI2026MD1	MISCELLANEOUS DETAILS

JEA
21 W CHURCH ST.
JACKSONVILLE, FLORIDA 32202

ISSUED FOR CONSTRUCTION
LEIDOS - 7.1.26

CONSULTANT INFORMATION

leidos
12901 SCIENCE DRIVE
ORLANDO, FL 32826
CA # 8697

PROFESSIONAL ENGINEER'S SEAL

ORIGINALLY PREPARED UNDER THE RESPONSIBLE SUPERVISION OF

PE: DIMITRI SANTIAGO
LIC. NO.: 93326
STATE: FL
DATE: 7/1/2026

DIMITRI SANTIAGO PUNTIS — LICENSE No. 93326 — STATE OF FLORIDA — PROFESSIONAL ENGINEER

REV	DATE	PROJ #	REVISION DESCRIPTION	BY	REVIEW
1	5.14.26	8009726	UPDATED CONSTRUCTION SEQUENCING. REPL'D TRANSFORMER T2 CONDUIT TO AC PANEL "YP-1".	LDOS	LDOS
2	7.1.26	8009726	UPDATED CT CABINET AND METER SUPPORT STRUCTURE TO STAINLESS STEEL PIPE.	LDOS	LDOS

ENGINEERING	
DATE	3.18.26
BY	LDOS
REVIEW	LDOS
DRAFTING	
DATE	3.18.26
BY	LDOS
REVIEW	LDOS

AC PANEL REPLACEMENT

CONDUIT PLAN

PICKETTVILLE SUBSTATION

JEA BUILDING COMMUNITY

SCALE: 3/16" = 1'

TRANSMISSION & SUBSTATION PROJECTS - 20410

FILE NAME: PI2026CP1
PROJECT ID: PI2026
SHEET NAME: 1 OF 1
PROJ #: 8009726

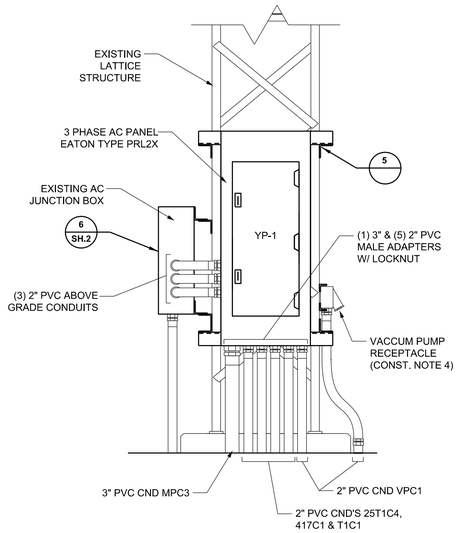

AC PANEL "YP-1" CONDUIT & GROUNDING DETAILS

2 (N.T.S.)

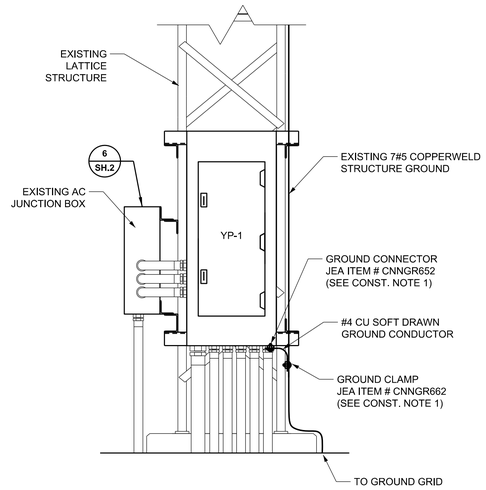

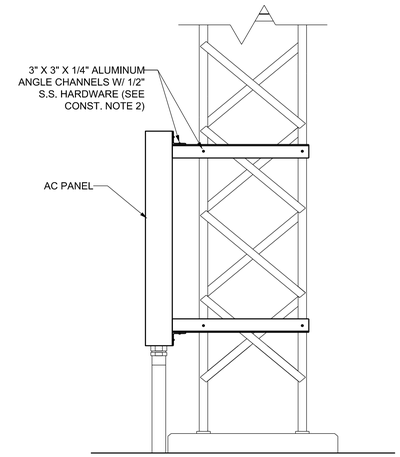

PANEL "YP-1"

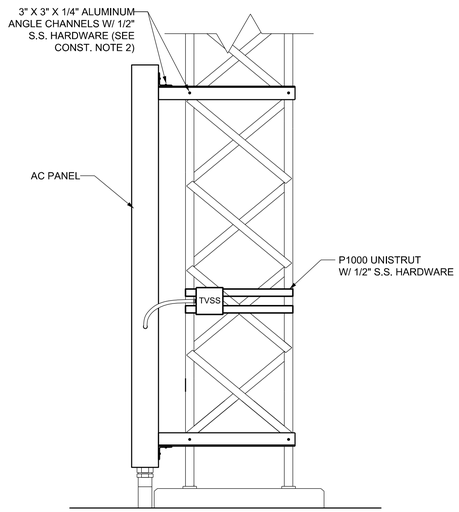

MAIN PANEL

TYPICAL PANEL MOUNTING DETAILS

5 (N.T.S.)

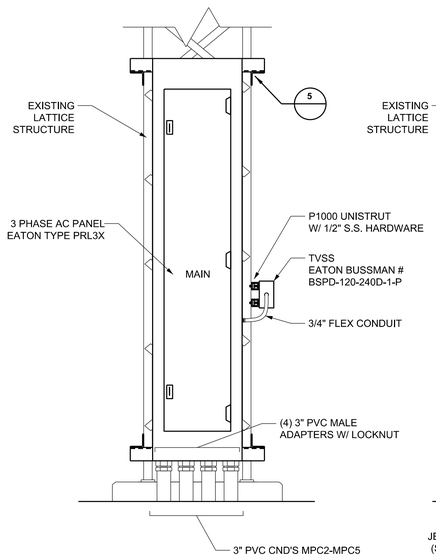

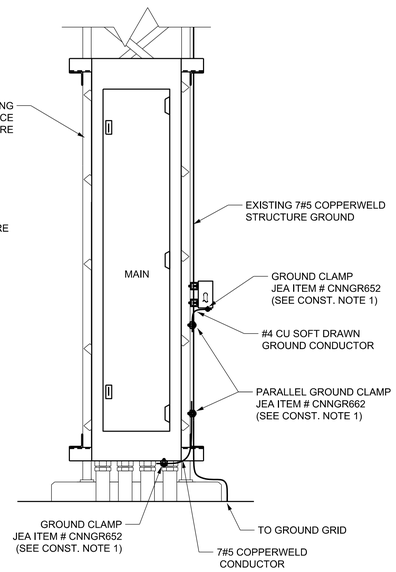

MAIN AC PANEL CONDUIT & GROUNDING DETAILS

1 (N.T.S.)

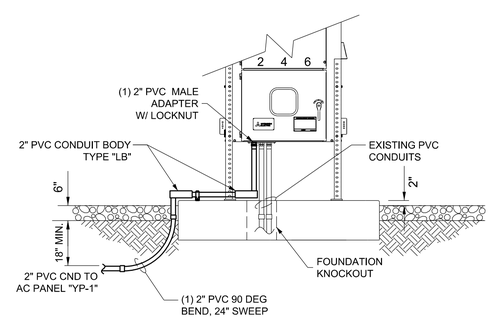

25kV BKR'S 25T1 & 417 CONDUIT STUB UP

3 (N.T.S.)

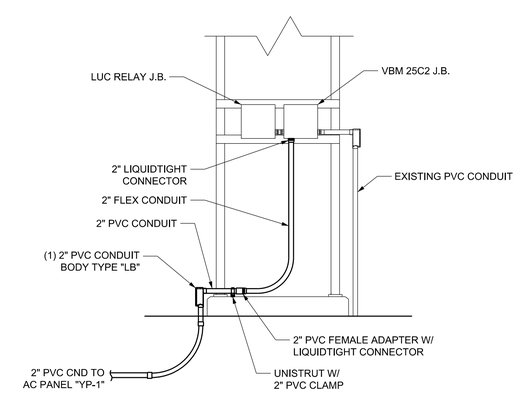

25kV VBM 25C2 CONDUIT DETAILS

4 (N.T.S.)

CONSTRUCTION NOTES:

1. AC PANEL AND JUNCTION BOX #6 GROUND TO BE TIED TO THE EXISTING STRUCTURE GROUND LEADS.
2. CONTRACTOR TO FURNISH AND INSTALL ALUMINUM CHANNELS TO MOUNT THE NEW MAIN AND YP-1 AC PANELS TO THE EXISTING LATTICE STRUCTURES. STRUCTURES TO BE FIELD DRILLED AND BARE METAL COATED WITH A ZINC RICH OXIDE SUCH AS "ZRC".
3. CONTRACTOR TO INSTALL 3/8" S.S. HARDWARE FOR MOUNTING PANEL IN THE AC JUNCTION BOX.
4. VACCUMP PUMP RECEPTACLE AND MOUNTING CHANNELS TO BE RELOCATED TO THE WEST FACE OF LATTICE STRUCTURE. MOUNTING HOLES TO BE FIELD DRILLED AND BARE METAL COATED WITH A ZINC RICH OXIDE SUCH AS "ZRC". AC CIRCUIT AND ASSOCIATED CONDUIT TO NEW AC PANEL "YP-1" TO BE INSTALLED.

REFERENCE DRAWINGS:

PI2026CP1	CONDUIT PLAN
PI2026CT1	CABLE SCHEDULE (INSTALL)
PI2026CT2	CABLE SCHEDULE (REMOVE)
PI2026LV1	LOW VOLTAGE
PI2026MD1	MISCELLANEOUS DETAILS
PI2026BOM	BILL OF MATERIALS

JEA
21 W CHURCH ST.
JACKSONVILLE, FLORIDA 32202

ISSUED FOR CONSTRUCTION
LEIDOS - 7.1.26

CONSULTANT INFORMATION

leidos
12901 SCIENCE DRIVE
ORLANDO, FL 32826
CA # 8697

PROFESSIONAL ENGINEER'S SEAL

ORIGINALLY PREPARED UNDER THE RESPONSIBLE SUPERVISION OF

PE: DIMITRI SANTIAGO
LIC. NO.: 93326
STATE: FL
DATE: 7/1/2026

DIMITRI SANTIAGO JURITY LICENSE No. 93326 STATE OF FLORIDA PROFESSIONAL ENGINEER

REV	DATE	PROJ #	REVISION DESCRIPTION	BY	REVIEW

ENGINEERING	
DATE	3.18.26
BY	LDOS
REVIEW	LDOS
DRAFTING	
DATE	3.18.26
BY	LDOS
REVIEW	LDOS

AC PANEL REPLACEMENT

CONDUIT DETAILS

PICKETTVILLE SUBSTATION

JEA BUILDING COMMUNITY

SCALE: 3/16" = 1'

TRANSMISSION & SUBSTATION PROJECTS - 20410

FILE NAME: PI2026CD1
PROJECT ID: PI2026
SHEET NAME: 1 OF 2
PROJ #: 8009726

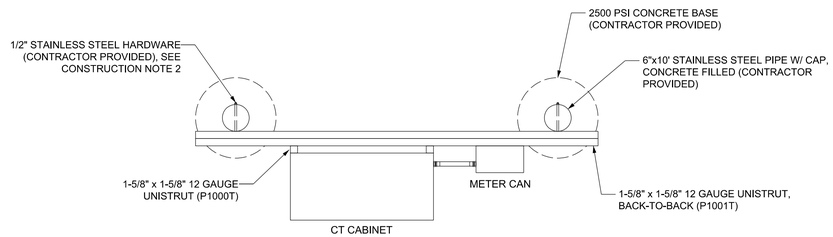

PLAN VIEW

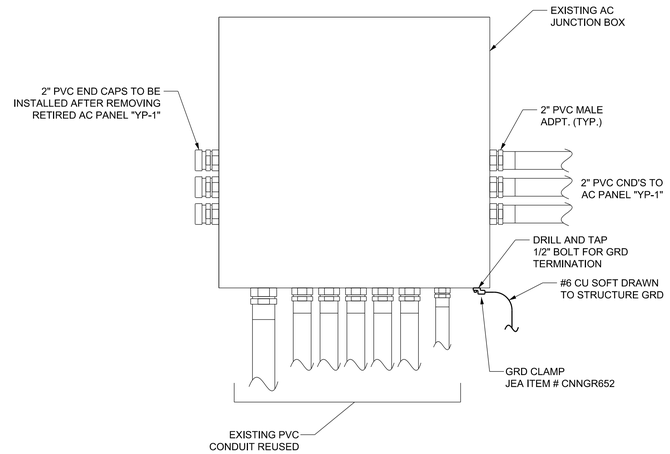

6 AC JUNCTION BOX DETAILS

(N.T.S.)

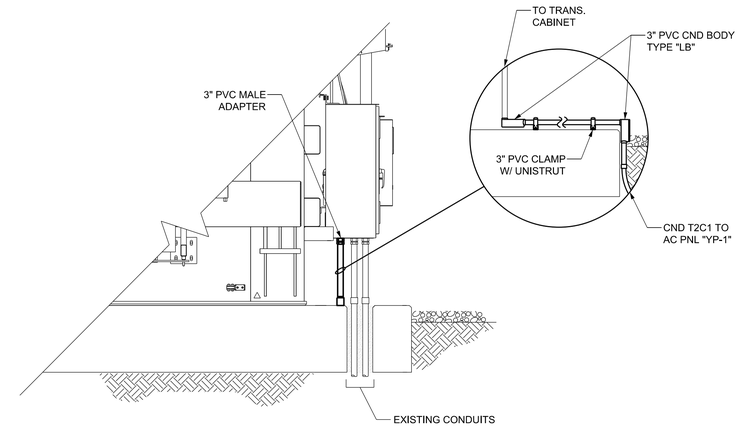

8 TRANSFORMER T2 ABOVE GRADE CONDUIT DETAILS

(N.T.S.)

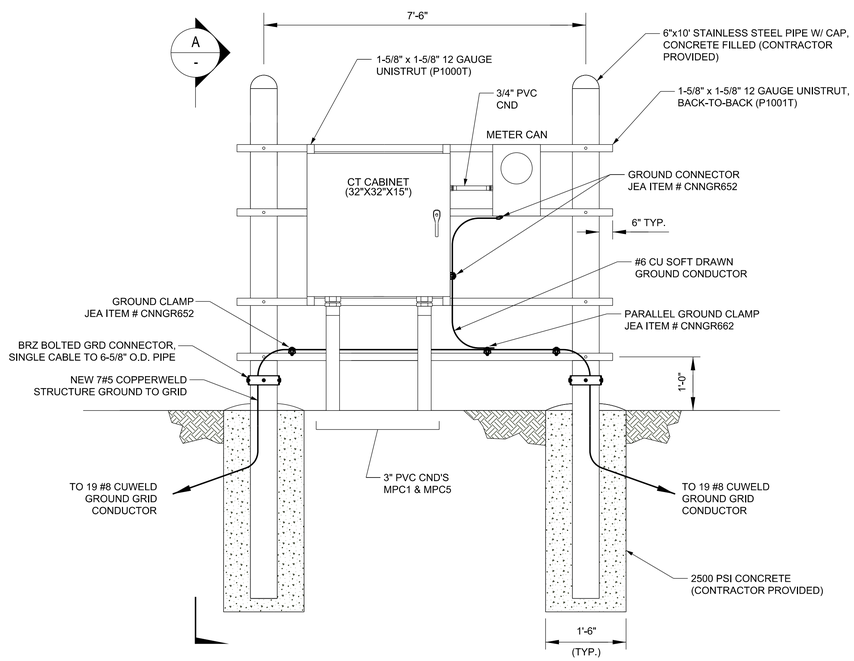

7 EQUIPMENT RACK CONDUIT & GROUNDING DETAILS

(N.T.S.)

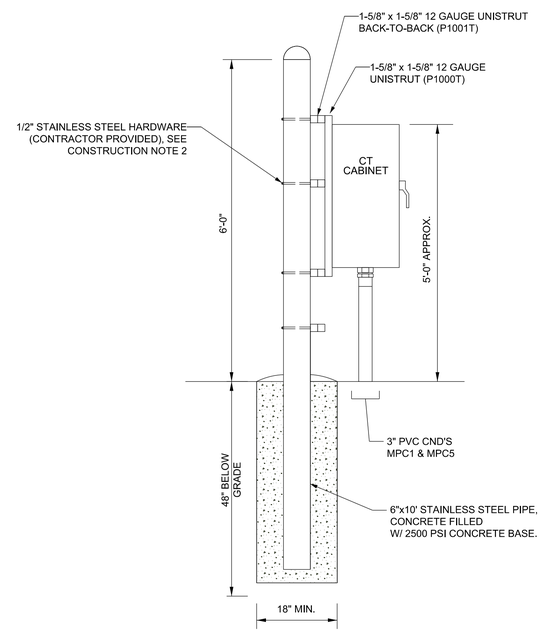

A EQUIPMENT RACK

(N.T.S.)

CONSTRUCTION NOTES:

1. CONTRACTOR SHALL PROVIDE (2) 6" X 10' GALVANIZED STEEL PIPES WITH A CAP AND CONCRETE FILLED. POSTS TO BE SET AT A DEPTH OF 48" BELOW GRADE WITH A 2500 PSI CONCRETE BASE OF 18" IN DIAMETER.
2. CONTRACTOR SHALL PROVIDE 1-5/8" X 1-5/8" 12 GAUGE, BACK TO BACK (P1001T), SOLID STAINLESS STEEL UNISTRUT FRAMING TO MOUNT THE CT CABINET AND METER BOX. THE FRAME SHALL BE MOUNTED TO THE GALVANIZED STEEL POSTS WITH A MINIMUM OF 1/2" STAINLESS STEEL BOLTS WITH STAINLESS STEEL HARDWARE AND SEALANT. UNISTRUT TO BE ADJUSTED AS REQUIRED TO MOUNT EQUIPMENT.
3. CONTRACTOR SHALL PROVIDE COPPER GROUND FITTINGS TO CONNECT THE CT CABINET AND METER BOX TO THE EXISTING GROUND GRID. NEW 7#5 COPPERWELD CONDUCTOR TO BE CONNECTED TO THE GROUND GRID USING EXOTHERMIC CONNECTIONS.

REFERENCE DRAWINGS:

PI2026CP1	CONDUIT PLAN
PI2026CT1	CABLE SCHEDULE (INSTALL)
PI2026CT2	CABLE SCHEDULE (REMOVE)
PI2026LV1	LOW VOLTAGE
PI2026MD1	MISCELLANEOUS DETAILS
PI2026BOM	BILL OF MATERIALS

JEA
21 W CHURCH ST.
JACKSONVILLE, FLORIDA 32202

ISSUED FOR CONSTRUCTION
LEIDOS - 7.1.26

CONSULTANT INFORMATION
leidos
12901 SCIENCE DRIVE
ORLANDO, FL 32826
CA # 8697

PROFESSIONAL ENGINEER'S SEAL
ORIGINALLY PREPARED UNDER THE RESPONSIBLE SUPERVISION OF
PE: DIMITRI SANTIAGO
LIC. NO.: 93326
STATE: FL
DATE: 7/1/2026

DIMITRI SANTIAGO PURITY LICENSE No. 93326 STATE OF FLORIDA PROFESSIONAL ENGINEER

REV	DATE	PROJ #	REVISION DESCRIPTION	BY	REVIEW
1	5.14.26	8009726	UPDATED CT CABINET SUPPORTS & AC JUNCTION BOX DETAILS.	LDOS	LDOS
2	7.1.26	8009726	UPDATED CT CABINET AND METER SUPPORT STRUCTURE TO STAINLESS STEEL PIPE.	LDOS	LDOS

ENGINEERING	
DATE	3.18.26
BY	LDOS
REVIEW	LDOS
DRAFTING	
DATE	3.18.26
BY	LDOS
REVIEW	LDOS

AC PANEL REPLACEMENT

CONDUIT DETAILS

PICKETTVILLE SUBSTATION

SCALE: 3/16" = 1'

TRANSMISSION & SUBSTATION PROJECTS - 20410

JEA BUILDING COMMUNITY

PROJ #: 8009726

FILE NAME: PI2026CD1

PROJECT ID: PI2026

SHEET NAME: 2 OF 2

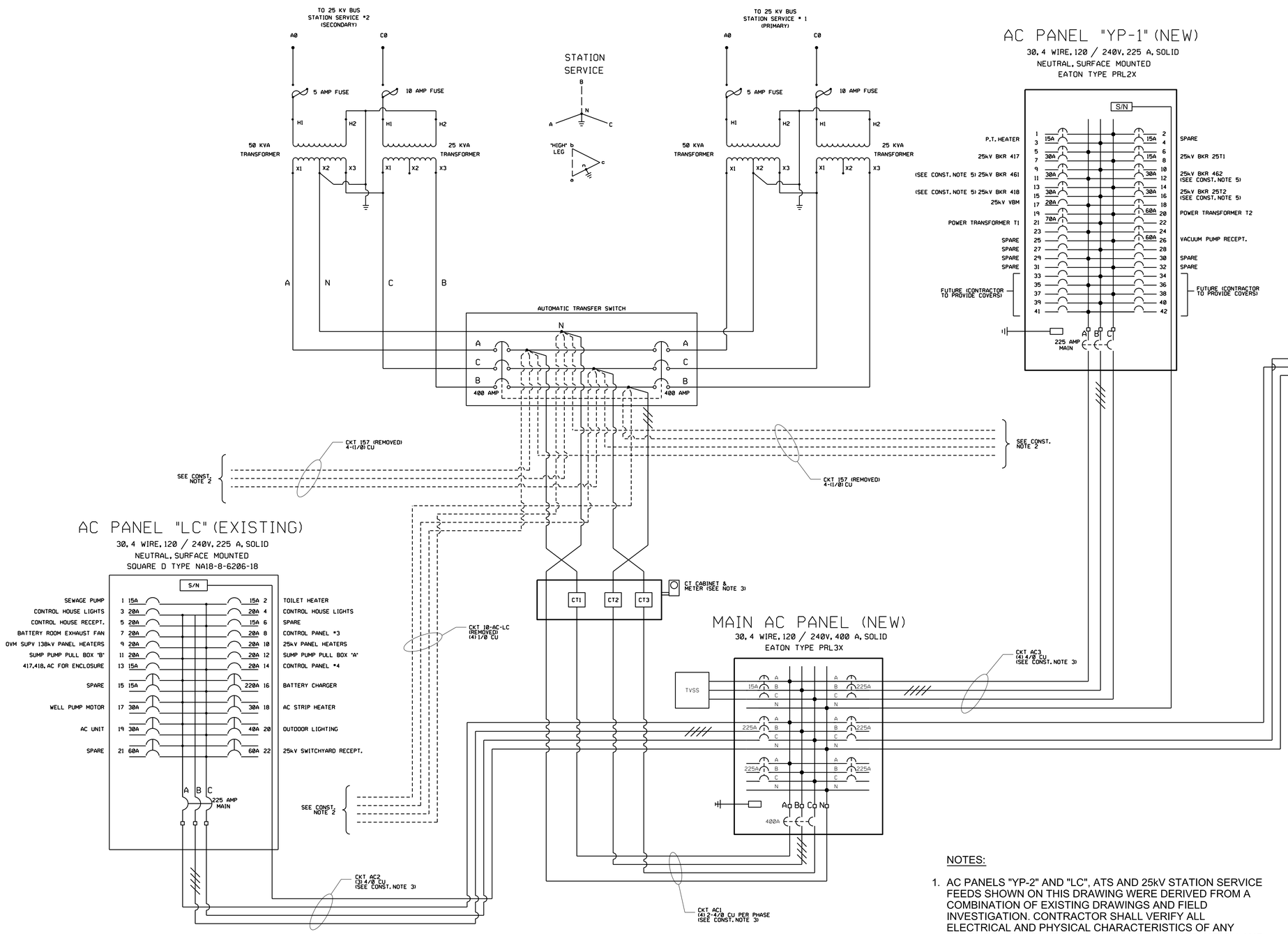

LEGEND:

EXISTING CIRCUIT TO BE REMOVED

NEW CIRCUIT

12" OF ORANGE TAPE (HIGH LEG)

CONSTRUCTION ACTIVITIES TO BE PERFORMED IN SEQUENTIAL ORDER:

1. TEMPORARY AC SUPPLY FEED FROM THE MAIN AC PANEL TO PANEL "YP-2" IN THE 138KV YARD TO BE INSTALLED. CABLE TO BE ABOVE GRADE AND TERMINATED AT THE MAIN AC PANEL ONLY. CONTRACTOR TO PROVIDE ADEQUATE PROTECTION FOR THE TEMPORARY ABOVE GRADE CABLE.
2. JEA SUBSTATION MAINTANENCE TO DE-ENERGIZE THE AUTOMATIC TRANSFER SWITCH AND REMOVE THE EXISTING AC SUPPLY FEEDS TO THE SECONDARY PANELS. CIRCUIT AC1 TO BE INSTALLED AT THE LOAD SIDE OF THE ATS. AUTOMATIC TRANSFER SWITCH TO BE RE-ENERGIZED.
3. CONTRACTOR TO REMOVE THE EXISTING AC FEEDS AT PANELS "YP-1" AND "LC" AND INSTALL NEW CIRCUITS AC3 AND AC2, RESPECTIVELY. CONTROL HOUSE PANEL "LC" TO BE PRIORITIZED FOLLOWED BY PANEL "YP-1". EXISTING AC FEED AT PANEL "YP-2" TO BE REMOVED AND THE TEMPORARY AC FEED FROM THE MAIN PANEL INSTALLED.
4. CONTRACTOR TO TERMINATE THE NEW AC SUPPLY CIRCUITS FOR TRANSFORMERS T1 AND T2 AND BREAKERS 417 AND 25T1 IN THE ASSOCIATED EQUIPMENT CABINETS. RETIRED AC SUPPLY CIRCUITS TO BE CUT BACK AND ABANDONED. CONDUITS 334, 404, 417R AND 25T1R TO BE REMOVED.
5. CONTRACTOR TO REUSE THE EXISTINGAC SUPPLY CIRCUITS FOR BREAKERS 418, 461, 462, 25T2 AND VACUUM PUMP RECEPTACLE FROM THE RETIRED AC PANEL "YP-1" IF THE CABLE LENGTH IS ADEQUATE. CIRCUITS TO BE ROUTED THROUGH EXISTING CONDUIT AND AC JUNCTION BOX TO NEW PANEL "YP-1" VIA ABOVE GRADE CONDUITS AS SHOWN IN THE CABLE SCHEDULE DRAWINGS (PI2026CT1 AND PI2026CT2). IF THE CABLE LENGTHS ARE NOT ADEQUATE CABLES ARE TO BE REPLACED.
6. CONTRACTOR TO INTERCEPT THE CONDUIT AND ASSOCIATED CIRCUIT FROM PANEL "YP-2" TO THE ATS AND RE ROUTE TO NEW MAIN AC PANEL. TEMPORARY FEED TO PANEL "YP-2" TO BE REMOVED AND THE PANEL ENERGIZED.

NOTES:

1. AC PANELS "YP-2" AND "LC", ATS AND 25kV STATION SERVICE FEEDS SHOWN ON THIS DRAWING WERE DERIVED FROM A COMBINATION OF EXISTING DRAWINGS AND FIELD INVESTIGATION. CONTRACTOR SHALL VERIFY ALL ELECTRICAL AND PHYSICAL CHARACTERISTICS OF ANY PANEL BEING WORKED IN/ON PRIOR TO CONSTRUCTION AND MARK UP ON AS-BUILT DRAWINGS.
2. CLOUDING OMITTED FOR CLARIFY.
3. METER BOX TO BE SPECIFIED AND PROVIDED BY JEA METERING GROUP. CT'S TO BE SPECIFIED BY JEA SPCP.

REFERENCE DRAWINGS:

PI2026CP1	CONDUIT PLAN
PI2026CD1	CONDUIT DETAILS
PI2026CS1	CONDUIT SCHEDULE
PI2026CT1	CABLE SCHEDULE (INSTALL)
PI2026CT2	CABLE SCHEDULE (REMOVE)

JEA
21 W CHURCH ST.
JACKSONVILLE, FLORIDA 32202

ISSUED FOR COSTRUCTION
LEIDOS - 7.1.26

CONSULTANT INFORMATION

leidos
12901 SCIENCE DRIVE
ORLANDO, FL 32826
CA # 8697

PROFESSIONAL ENGINEER'S SEAL

ORIGINALLY PREPARED UNDER THE RESPONSIBLE SUPERVISION OF

PE: DIMITRI SANTIAGO
LIC. NO.: 93326
STATE: FL
DATE: 7/1/2026

DIMITRI SANTIAGO PIRITS LICENSE No. 93326 STATE OF FLORIDA PROFESSIONAL ENGINEER

REV	DATE	PROJ #	REVISION DESCRIPTION	BY	REVIEW
1	5.14.26	8009726	UPDATED CONSTRUCTION SEQUENCING & SCHEDULES.	LDOS	LDOS

ENGINEERING	
DATE	3.18.26
BY	LDOS
REVIEW	LDOS
DRAFTING	
DATE	3.18.26
BY	LDOS
REVIEW	LDOS

AC PANEL REPLACEMENT

LOW VOLTAGE

PICKETTVILLE SUBSTATION

SCALE: NO SCALE

TRANSMISSION & SUBSTATION PROJECTS - 20410

PROJ #: 8009726

FILE NAME: PI2026LV1.DGN

PROJECT ID: PI2026

SHEET NAME: 1 OF 1

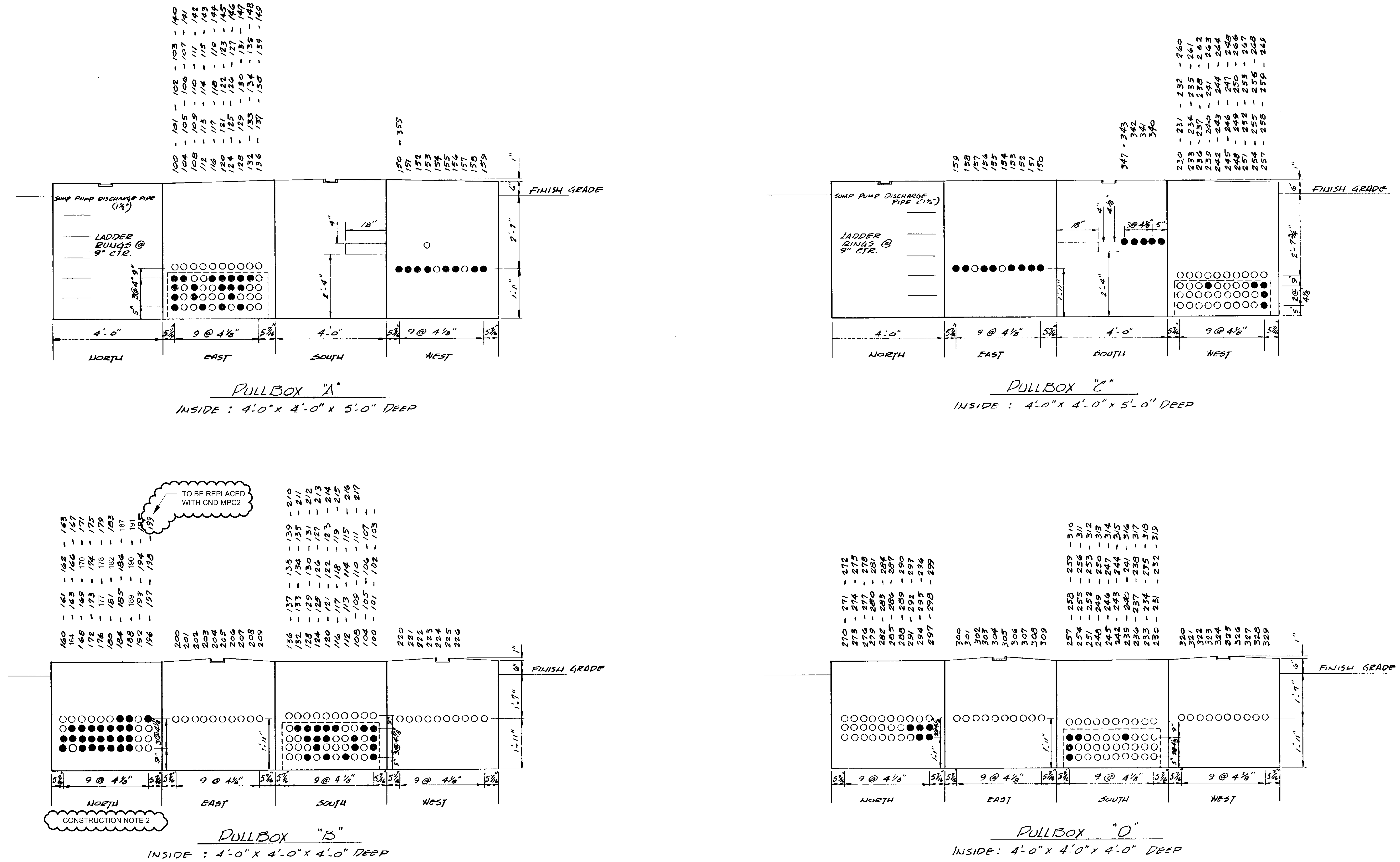

PULLBOX DEVELOPMENTS
SCALE ½" = 1'-0"

CONSTRUCTION NOTES:

1. THIS DRAWING WAS DEVELOPED FROM A COMBINATION OF FIELD INVESTIGATION AND INFORMATION IN THE EXISTING SUBSTASTION DRAWING SET. CONTRACTOR VERIFY THE FIELD CONDITIONS OF THE MANHOLE AND PROVIDE FIELD MARKUPS IN THE FORM OF REDLINES.

2. CONTRACTOR TO INSTALL NEW CONDUIT MPC2 FROM THE MAIN AC PANEL TO PULLBOX B AND UTILIZE AVAILABLE POSITION 199 IN THE NORTH FACE OF THE PULLBOX. POSITION TO BE RENAMED.

LEGEND

● EXISTING CONDUIT WITH EXISTING CABLE

○ EXISTING CONDUIT WITHOUT CABLES

REFERENCE DRAWINGS:

PI2026CP1	CONDUIT PLAN
PI2026CS1	CONDUIT SCHEDULE

JEA
21 W CHURCH ST.
JACKSONVILLE, FLORIDA 32202

CONSULTANT INFORMATION
leidos
12901 SCIENCE DRIVE
ORLANDO, FL 32826
CA # 8697

ISSUED FOR CONSTRUCTION
LEIDOS - 7.1.26

PROFESSIONAL ENGINEER'S SEAL
ORIGINALLY PREPARED UNDER THE RESPONSIBLE SUPERVISION OF
PE: DIMITRI SANTIAGO
LIC. NO.: 93326
STATE: FL
DATE: 7/1/2026

DIMITRI SANTIAGO PURITS LICENSE No. 93326 STATE OF FLORIDA PROFESSIONAL ENGINEER

REV	DATE	PROJ #	REVISION DESCRIPTION	BY	REVIEW

ENGINEERING	
DATE	3.18.26
BY	LDOS
REVIEW	LDOS
DRAFTING	
DATE	3.18.26
BY	LDOS
REVIEW	LDOS

AC PANEL REPLACEMENT

MISCELLANEOUS DETAILS

PICKETTVILLE SUBSTATION

SCALE: –

TRANSMISSION & SUBSTATION PROJECTS - 20410

JEA BUILDING COMMUNITY

PROJ #: 8009726

FILE NAME: PI2026MD1

PROJECT ID: PI2026

SHEET NAME: 1 OF 1

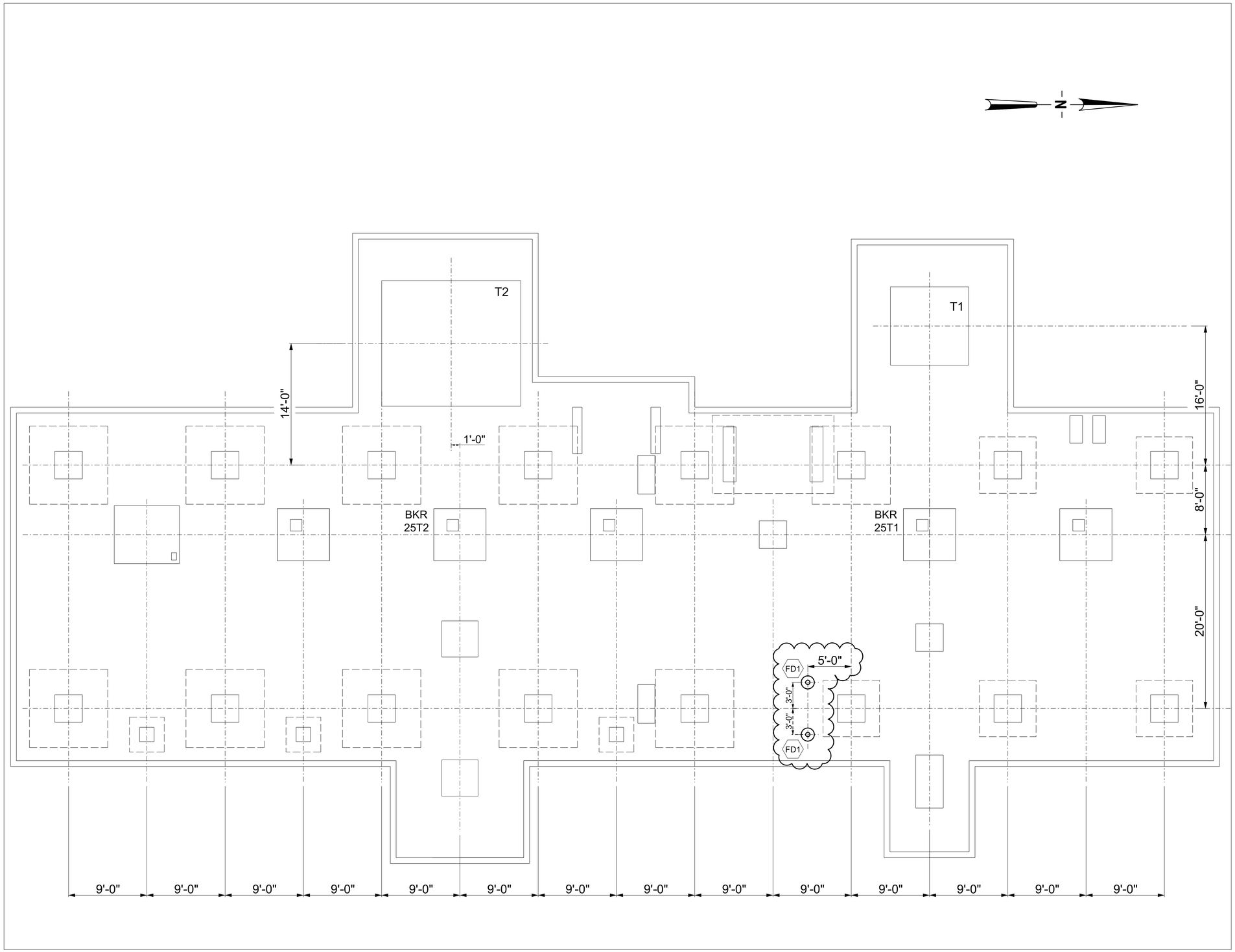

LEGEND

SYMBOL	DESCRIPTION	DETAIL DRAWING
FD1	EQUIP. RACK FOUNDATION	PI2026CD1
	EXISTING FOUNDATION	
	NEW FOUNDATION	

REFERENCE DRAWINGS:

PI2026CP1	CONDUIT PLAN
PI2026CD1	CONDUIT DETAILS

JEA
21 W CHURCH ST.
JACKSONVILLE, FLORIDA 32202

ISSUED FOR CONSTRUCTION
LEIDOS - 7.1.26

CONSULTANT INFORMATION

leidos
12901 SCIENCE DRIVE
ORLANDO, FL 32826
CA # 8697

PROFESSIONAL ENGINEER'S SEAL
ORIGINALLY PREPARED UNDER THE RESPONSIBLE SUPERVISION OF
PE: DIMITRI SANTIAGO
LIC. NO.: 93326
STATE: FL
DATE: 7/1/2026

DIMITRI SANTIAGO PURIS'S LICENSE No. 93326 STATE OF FLORIDA PROFESSIONAL ENGINEER
Santiago

REV	DATE	PROJ #	REVISION DESCRIPTION	BY	REVIEW
1	5.14.26	8009726	UPDATED CT CABINET & METER BOX SUPPORTS.	LDOS	LDOS

ENGINEERING	
DATE	3.18.26
BY	LDOS
REVIEW	LDOS
DRAFTING	
DATE	3.18.26
BY	LDOS
REVIEW	LDOS

AC PANEL REPLACEMENT

FOUNDATION PLAN

PICKETTVILLE SUBSTATION

SCALE: 3/16" = 1'

TRANSMISSION & SUBSTATION PROJECTS - 20410

JEA BUILDING COMMUNITY

PROJ #: 8009726

FILE NAME: PI2026FP1

PROJECT ID: PI2026

SHEET NAME: 1 OF 1

CONDUIT SCHEDULE

CONDUIT #	FROM	TO	SIZE (IN)	TYPE	LENGTH (FT)	CABLES IN CONDUIT	REMARKS	STATUS
400	BKR 462 CABINET	AC JUNCTION BOX	2	UV	75	462/AC	AC SUPPLY	EXISTING CONDUIT REUSED
405	VACCUM PUMP RECEPTACLE	AC JUNCTION BOX	2	UV	60	VAC/AC1	AC SUPPLY	EXISTING CONDUIT REUSED
25T2C3	BKR 25T2 CABINET	AC JUNCTION BOX	2	UV	55	25T2/AC	AC SUPPLY	EXISTING CONDUIT REUSED
418C1	BKR 418 CABINET	AC JUNCTION BOX	2	UV	25	418/AC	AC SUPPLY	EXISTING CONDUIT REUSED
461C1	BKR 461 CABINET	AC JUNCTION BOX	2	UV	50	461/AC	AC SUPPLY	EXISTING CONDUIT REUSED
404	TRANSFORMER T2 CABINET	AC JUNCTION BOX	2	UV	70	T2/AC	AC SUPPLY	CONDUIT REMOVED
408	ATS	AC JUNCTION BOX	3	UV	20	157	AC SUPPLY	CONDUIT REMOVED
603	VBM 25C2	RETIRED AC PANEL "YP-1"	2	UV	70	25C2/AC	AC SUPPLY	CONDUIT REMOVED
417R	BKR 417 CABINET	RETIRED AC PANEL "YP-1"	2	UV	50	417/AC	AC SUPPLY	CONDUIT REMOVED
25T1R	BKR 25T1 CABINET	RETIRED AC PANEL "YP-1"	2	UV	25	25T1/AC	AC SUPPLY	CONDUIT REMOVED
334	TRANSFORMER T1 CABINET	RETIRED AC PANEL "YP-1"	2	UV	25	T1/AC	AC SUPPLY	CONDUIT REMOVED
MPC1	ATS	CT CABINET	3	UV	30	AC1	NEW MAIN AC PANEL FEED	NEW CONDUIT
MPC2	AC PANEL MAIN	PULL BOX "B"	3	UV	60	AC2	EXISTING AC PANEL "LC" FEED	NEW CONDUIT
MPC3	AC PANEL MAIN	NEW AC PANEL "YP-1"	3	UV	45	AC3	NEW AC PANEL "YP-1" FEED	NEW CONDUIT
MPC4	AC PANEL MAIN	AC PANEL "YP-2"	3	UV	140	AC4	EXISTING AC PANEL "YP-2" FEED	EXISTING CONDUIT 333 INTERCEPTED AND REROUTED (SEE CONDUIT PLAN DRAWING PI2026CP1)
MPC5	CT CABINET	AC PANEL MAIN	3	UV	10	AC1	AC SUPPLY	NEW CONDUIT
25C2C1	VBM 25C2	NEW AC PANEL "YP-1"	2	UV, FLEX	70	25C2/AC	AC SUPPLY	NEW CONDUIT
417C1	BKR 417 CABINET	NEW AC PANEL "YP-1"	2	UV	30	417/AC	AC SUPPLY	NEW CONDUIT
25T1C4	BKR 25T1 CABINET	NEW AC PANEL "YP-1"	2	UV	20	25T1/AC	AC SUPPLY	NEW CONDUIT
T1C1	TRANSFORMER T1 CABINET	NEW AC PANEL "YP-1"	3	UV	25	T1/AC	AC SUPPLY	NEW CONDUIT
T2C1	TRANSFORMER T2 CABINET	NEW AC PANEL "YP-1"	3	UV	80	T2/AC	AC SUPPLY	NEW CONDUIT
VPC1	VACCUM PUMP RECEPTACLE	NEW AC PANEL "YP-1"	3	UV	5	VAC/AC2	AC SUPPLY	NEW CONDUIT
T2C1	TRANSFORMER T2 CABINET	NEW AC PANEL "YP-1"	3	UV	80	T2/AC	AC SUPPLY	NEW CONDUIT

CONDUIT LEGEND:

UV UV RESISTANT PVC CONDUIT, SCH 40
FLEX FLEXIBLE UV RESISTANT PVC CONDUIT, SCH 40
EMT ELECTRICAL METALLIC TUBING
RMC RIGID METALLIC (GALVANIZED STEEL) CONDUIT
IMC INTERMEDIATE METALLIC CONDUIT
LFM LIQUID-TIGHT FLEXIBLE METALLIC CONDUIT
SW SQUARE WIREWAY

CONDUIT NOTES:

1. THE CONTRACTOR SHALL BE RESPONSIBLE FOR ALL NECESSARY CONDUIT MATERIALS, INCLUDING FITTINGS.
2. THE CONTRACTOR SHALL BE RESPONSIBLE FOR VERIFICATION OF ALL CONDUIT LENGTHS. CONDUIT LENGTHS ARE APPROXIMATE.

REFERENCE DRAWINGS:

PI2026CP1 CONDUIT PLAN & DETAILS
PI2026CT1 CABLE SCHEDULE (INSTALL)
PI2026CT2 CABLE SCHEDULE (REMOVAL)

JEA
BUILDING COMMUNITY
21 W CHURCH ST.
JACKSONVILLE, FLORIDA 32202

ISSUED FOR CONSTRUCTION
LEIDOS - 7.1.26

CONSULTANT INFORMATION

leidos
12901 SCIENCE DRIVE
ORLANDO, FL 32826
CA # 8697

PROFESSIONAL ENGINEER'S SEAL

LATEST REVISION
ORIGINALLY PREPARED UNDER
THE RESPONSIBLE SUPERVISION OF
PE: DIMITRI SANTIAGO
LIC. NO.: 93326
STATE: FL
DATE: 7/1/2026

DIMITRI SANTIAGO KURITS
LICENSE
No. 93326
STATE OF
FLORIDA
PROFESSIONAL ENGINEER

REV	DATE	PROJ #	REVISION DESCRIPTION	BY	REVIEW	ENGINEERING	
1	5.14.26	8009726	REPL'D TRANSFORMER T2 CONDUIT RUN.	LDOS	LDOS	DATE	3.18.26
-	-	-	-	-	-	BY	LDOS
-	-	-	-	-	-	REVIEW	LDOS
-	-	-	-	-	-	DRAFTING	
-	-	-	-	-	-	DATE	3.18.26
-	-	-	-	-	-	BY	LDOS
-	-	-	-	-	-	REVIEW	LDOS

AC PANEL REPLACEMENT

CONDUIT SCHEDULE

PICKETTVILLE SUBSTATION

SCALE: -

SUBSTATION & TRANSMISSION PROJECTS 20410

PROJ #: 8009726

DRAWING NAME: PI2026CS1.DGN

DRAWING SET: PI2026

DRAWING #: 01 OF 01

JEA ARCHD 24X36 (08/19) FC172CS1.dgn 2019-5-7 - 13:44

CABLE SCHEDULE

CABLE #	FROM	TO	VOLT (V)	SIZE (AWG)	#C	S/M	TYPE	LENGTH (FT)	CONDUIT ROUTE	REMARKS
AC1	AC PANEL MAIN	ATS	600	(2) 4/0	4	S	C	50	CND MPC1, CT CABINET, CND MPC5	NEW MAIN AC PANEL FEED
AC2	AC PANEL MAIN	CONTROL HOUSE PANEL "LC"	600	4/0	4	S	C	200	CND MPC2, PULL BOX B, DUCT BANK, CABLE TRAY	NEW FEED TO EXISTING AC PANEL "LC"
AC3	AC PANEL MAIN	AC PANEL "YP-1"	600	4/0	4	S	C	70	CND MPC3	NEW PANEL "YP-1" FEED
AC4	AC PANEL MAIN	AC PANEL "YP-2"	600	4/0	3	S	C	170	CND 412	NEW FEED TO EXISTING AC PANEL "YP-2"
TEMP/AC	AC PANEL MAIN	AC PANEL "YP-2"	600	4/0	3	S	C	150	ABOVE GRADE	TEMPORARY FEED TO EXISTING AC PANEL "YP-2"
462/AC1	BREAKER CABINET	AC PANEL "YP-1"	600	10	3	S	C	95	CND 400, AC JUNCTION BOX, ABOVE GRADE CONDUIT	EXISTING CABLE REPLACED AND ROUTED TO NEW PANEL "YP-1" VIA JUNCTION BOX (CONTRACTOR TO REUSE EXISTING CIRCUIT IF CABLE LENGTH IS ADEQUATE)
25T2/AC1	BREAKER CABINET	AC PANEL "YP-1"	600	10	3	S	C	80	CND 25T2C3, AC JUNCTION BOX, ABOVE GRADE CONDUIT	EXISTING CABLE REPLACED AND ROUTED TO NEW PANEL "YP-1" VIA JUNCTION BOX (CONTRACTOR TO REUSE EXISTING CIRCUIT IF CABLE LENGTH IS ADEQUATE)
461/AC1	BREAKER CABINET	AC PANEL "YP-1"	600	10	3	S	C	60	CND 461C1, AC JUNCTION BOX, ABOVE GRADE CONDUIT	EXISTING CABLE REPLACED AND ROUTED TO NEW PANEL "YP-1" VIA JUNCTION BOX (CONTRACTOR TO REUSE EXISTING CIRCUIT IF CABLE LENGTH IS ADEQUATE)
418/AC1	BREAKER CABINET	AC PANEL "YP-1"	600	10	3	S	C	40	CND 418C1, AC JUNCTION BOX, ABOVE GRADE CONDUIT	EXISTING CABLE REPLACED AND ROUTED TO NEW PANEL "YP-1" VIA JUNCTION BOX (CONTRACTOR TO REUSE EXISTING CIRCUIT IF CABLE LENGTH IS ADEQUATE)
VAC/AC1	VACCUM PUMP RECEPTACLE	AC PANEL "YP-1"	600	2	4	S	C	70	CND 405, AC JUNCTION BOX, ABOVE GRADE CONDUIT	EXISTING CABLE REPLACED AND ROUTED TO NEW PANEL "YP-1" VIA JUNCTION BOX (CONTRACTOR TO REUSE EXISTING CIRCUIT IF CABLE LENGTH IS ADEQUATE)
T1/AC	TRANSFORMER T1 CABINET	AC PANEL "YP-1"	600	2	4	S	C	40	T1/C1	EXISTING AC SUPPLY CABLE REPLACED AND ROUTED TO NEW PANEL "YP-1" VIA NEW CONDUIT
T2/AC	TRANSFORMER CABINET	AC PANEL "YP-1"	600	2	4	S	C	100	ABOVE GRADE CND, T2/C1	EXISTING CABLE REPLACED AND ROUTED TO NEW PANEL "YP-1" VIA JUNCTION BOX
25T1/AC	BKR 25T1 CABINET	AC PANEL "YP-1"	600	10	3	S	C	35	25T1/C1	EXISTING AC SUPPLY CABLE REPLACED AND ROUTED TO NEW PANEL "YP-1" VIA NEW CONDUIT
417/AC	BKR 417 CABINET	AC PANEL "YP-1"	600	10	3	S	C	50	417/C1	EXISTING AC SUPPLY CABLE REPLACED AND ROUTED TO NEW PANEL "YP-1" VIA NEW CONDUIT
25C2/AC	VBM 25C2 CABINET	AC PANEL "YP-1"	600	10	3	S	C	100	25C2/C1	EXISTING AC SUPPLY CABLE REPLACED AND ROUTED TO NEW PANEL "YP-1" VIA NEW CONDUIT
VAC/AC2	VACCUM PUMP RECEPTACLE	AC PANEL "YP-1"	600	2	4	S	C	10	VPC1	EXISTING AC SUPPLY CABLE REPLACED AND ROUTED TO NEW PANEL "YP-1" VIA NEW CONDUIT

CABLE LEGEND:

A	THHN INSULATED COPPER CONDUCTOR
B	CONTROL CABLE
BS	SHIELDED CONTROL CABLE
C	RHW, THHW, OR THWN INSULATED COPPER CONDUCTOR
F	INSTRUMENT CABLE
FO	FIBER OPTIC CABLE
W	WELDING CABLE, CLASS K
M	MULTIPLE CONDUCTOR
S	SINGLE CONDUCTOR
TRAY	CONTROL HOUSE CABLE TRAY
TRENCH	CONTROL HOUSE CABLE TRENCH

CABLE NOTES:

1. TYPE B, BS, F, AND FO CABLE SHALL BE FURNISHED BY THE OWNER, UNLESS OTHERWISE SPECIFIED.
2. THE CONTRACTOR SHALL FURNISH ALL OTHER CABLE, AS SPECIFIED.
3. THE CONTRACTOR SHALL BE RESPONSIBLE FOR VERIFICATION OF ALL CABLE LENGTHS. CABLE LENGTHS ARE APPROXIMATE.
4. THIS SCHEDULE WAS DEVELOPED FROM FIELD INVESTIGATION. CONTRACTOR TO VERIFY THE FINALIZED CABLE INSTALL AND REMOVAL SCHEDULES WITH A JEA REPRESENTATIVE BEFORE COMMENCING WORK.

REFERENCE DRAWINGS:

PI2026CP1	CONDUIT PLAN & DETAILS
PI2026CS1	CONDUIT SCHEDULE
PI2026CT2	CABLE SCHEDULE (REMOVAL)

JEA ARCH-D 24X36 (08/16) FC172CT1.dgn 2018-5-7 - 13:21

JEA
BUILDING COMMUNITY
21 W CHURCH ST.
JACKSONVILLE, FLORIDA 32202

ISSUED FOR CONSTRUCTION
LEIDOS - 7.1.26

CONSULTANT INFORMATION
leidos
12901 SCIENCE DRIVE
ORLANDO, FL 32826
CA # 8697

PROFESSIONAL ENGINEER'S SEAL

LATEST REVISION ORIGINALLY PREPARED UNDER THE RESPONSIBLE SUPERVISION OF
PE: DIMITRI SANTIAGO
LIC. NO.: 93326
STATE: FL
DATE: 7/1/2026

DIMITRI SANTIAGO PURITS LICENSE No. 93326 STATE OF FLORIDA PROFESSIONAL ENGINEER
Santiago

REV	DATE	PROJ #	REVISION DESCRIPTION	BY	REVIEW
1	5.14.26	8009726	UPDATED CKT ROUTING FOR T2, RECEPTACLE & BKR'S 418, 461, 462 & 25T1.	LDOS	LDOS
-	-	-	-	-	-
-	-	-	-	-	-
-	-	-	-	-	-
-	-	-	-	-	-
-	-	-	-	-	-
-	-	-	-	-	-

ENGINEERING	
DATE	3.18.26
BY	LDOS
REVIEW	LDOS
DRAFTING	
DATE	3.18.26
BY	LDOS
REVIEW	LDOS

AC PANEL REPALCEMENT

CABLE SCHEDULE (INSTALL)

PICKETTVILLE SUBSTATION

SCALE: -
SUBSTATION & TRANSMISSION PROJECTS 20410
PROJ #: 8009726

DRAWING NAME: PI2026CT1.DGN
DRAWING SET PI2026
DRAWING #: 01 OF 01

CABLE SCHEDULE

CABLE #	FROM	TO	VOLT (V)	SIZE (AWG)	#C	S/M	TYPE	LENGTH (FT)	CONDUIT ROUTE	REMARKS
157	ATS	AC PANEL "YP-1"	600	1/0	3	S	C	30	CONTRACTOR TO VERIFY CND ROUTE	AC SUPPLY CABLE REPLACED, NEW CND ROUTE UTALIZED
158	ATS	AC PANEL "YP-2"	600	1/0	3	S	C	120	CONTRACTOR TO VERIFY CND ROUTE	AC SUPPLY CABLE REPLACED, NEW CND ROUTE UTALIZED
10-AC-LC	ATS	AC PANEL "LC"	600	1/0	3	S	C	170	CONTRACTOR TO VERIFY CND ROUTE	AC SUPPLY CABLE REPLACED, NEW CND ROUTE UTALIZED
CONTRACTOR TO VERIFY CKT CODE	TRANSFORMER T1 CABINET	AC PANEL "YP-1"	600	2	4	S	C	30	CND 334	AC SUPPLY CABLE REPLACED, NEW CND ROUTE UTALIZED
25T1/AC	BKR 25T1 CABINET	AC PANEL "YP-1"	600	8	3	S	C	25	CND 25T1R	AC SUPPLY CABLE REPLACED, NEW CND ROUTE UTALIZED
417/AC	BKR 417 CABINET	AC PANEL "YP-1"	600	8	3	S	C	50	CND 417R	AC SUPPLY CABLE REPLACED, NEW CND ROUTE UTALIZED
CONTRACTOR TO VERIFY CKT CODE	VBM 25C2 CABINET	AC PANEL "YP-1"	600	8	3	S	C	100	CND 603	AC SUPPLY CABLE REPLACED, NEW CND ROUTE UTALIZED
VAC/AC2	VACCUM PUMP RECEPTACLE	AC PANEL "YP-1"	600	2	4	S	C	10	CONTRACTOR TO VERIFY CND ROUTE	RECEPTACLE RELOCATED, EXISTING CIRCUIT REMOVED AND NEW CIRCUIT INSTALLED AT AC PANEL "YP-1"
T2/AC1	TRANSFORMER CABINET	AC PANEL "YP-1"	600	2	4	S	C	100	CND 404, AC JUNCTION BOX, RETIRED PANEL "YP-1"	AC SUPPLY CABLE REPLACED, EXISTING CND ROUTE TO AC JUNCTION BOX REUSED
462/AC1	BREAKER CABINET	AC PANEL "YP-1"	600	10	3	S	C	95	CND 400, AC JUNCTION BOX, RETIRED PANEL "YP-1"	AC SUPPLY CABLE REPLACED, EXISTING CND ROUTE TO AC JUNCTION BOX REUSED
25T2/AC1	BREAKER CABINET	AC PANEL "YP-1"	600	10	3	S	C	80	CND 25T2C3, AC JUNCTION BOX, RETIRED PANEL "YP-1"	AC SUPPLY CABLE REPLACED, EXISTING CND ROUTE TO AC JUNCTION BOX REUSED
461/AC1	BREAKER CABINET	AC PANEL "YP-1"	600	10	3	S	C	60	CND 461C1, AC JUNCTION BOX, RETIRED PANEL "YP-1"	AC SUPPLY CABLE REPLACED, EXISTING CND ROUTE TO AC JUNCTION BOX REUSED
418/AC1	BREAKER CABINET	AC PANEL "YP-1"	600	10	3	S	C	40	CND 418C1, AC JUNCTION BOX, RETIRED PANEL "YP-1"	AC SUPPLY CABLE REPLACED, EXISTING CND ROUTE TO AC JUNCTION BOX REUSED
VAC/AC1	VACCUM PUMP RECEPTACLE	AC PANEL "YP-1"	600	2	4	S	C	70	CND 405, AC JUNCTION BOX, RETIRED PANEL "YP-1"	AC SUPPLY CABLE REPLACED, EXISTING CND ROUTE TO AC JUNCTION BOX REUSED

CABLE LEGEND:

A	THHN INSULATED COPPER CONDUCTOR
B	CONTROL CABLE
BS	SHIELDED CONTROL CABLE
C	RHW, THHW, OR THWN INSULATED COPPER CONDUCTOR
F	INSTRUMENT CABLE
FO	FIBER OPTIC CABLE
W	WELDING CABLE, CLASS K
M	MULTIPLE CONDUCTOR
S	SINGLE CONDUCTOR
TRAY	CONTROL HOUSE CABLE TRAY
TRENCH	CONTROL HOUSE CABLE TRENCH

CABLE NOTES:

1. TYPE B, BS, F, AND FO CABLE SHALL BE FURNISHED BY THE OWNER, UNLESS OTHERWISE SPECIFIED.
2. THE CONTRACTOR SHALL FURNISH ALL OTHER CABLE, AS SPECIFIED.
3. THE CONTRACTOR SHALL BE RESPONSIBLE FOR VERIFICATION OF ALL CABLE LENGTHS. CABLE LENGTHS ARE APPROXIMATE.
4. THE CABLE CODES SHOWN ON THIS DRAWING WERE DERIVED FROM FIELD INVESTIGATIONS. NO EXISTING CABLE AND CONDUIT SCHEDULES COULD BE LOCATED IN THE DRAWING SET. CONTRACTOR TO VERIFY THE FINALIZED CABLE REMOVAL SCHEDULE WITH A JEA REPRESENTATIVE BEFORE COMMENCING WORK.

REFERENCE DRAWINGS:

PI2026CP1	CONDUIT PLAN & DETAILS
PI2026CS1	CONDUIT SCHEDULE
PI2026CT1	CABLE SCHEDULE (INSTALL)

JEA ARCH-D 24X36 (08/16) FC172CT1.dgn 2018-5-7 - 13:21

JEA
BUILDING COMMUNITY
21 W CHURCH ST.
JACKSONVILLE, FLORIDA 32202

ISSUED FOR CONSTRUCTION
LEIDOS - 7.1.26

CONSULTANT INFORMATION

leidos
12901 SCIENCE DRIVE
ORLANDO, FL 32826
CA # 8697

PROFESSIONAL ENGINEER'S SEAL

LATEST REVISION ORIGINALLY PREPARED UNDER THE RESPONSIBLE SUPERVISION OF

PE: DIMITRI SANTIAGO
LIC. NO.: 93326
STATE: FL
DATE: 7/1/2026

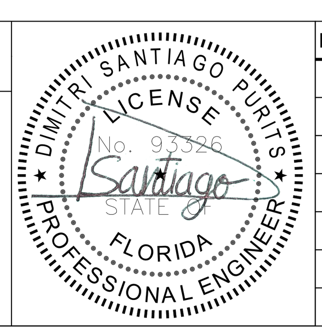

REV	DATE	PROJ #	REVISION DESCRIPTION	BY	REVIEW
1	5.14.26	8009726	REPL'D TRANSFORMER T2 AC SUPPLY CIRCUIT.	LDOS	LDOS
-	-	-	-	-	-
-	-	-	-	-	-
-	-	-	-	-	-
-	-	-	-	-	-
-	-	-	-	-	-
-	-	-	-	-	-

ENGINEERING	
DATE	3.18.26
BY	LDOS
REVIEW	LDOS
DRAFTING	
DATE	3.18.26
BY	LDOS
REVIEW	LDOS

AC PANEL REPLACEMENT

CABLE SCHEDULE (REMOVE)

PICKETTVILLE SUBSTATION

SCALE: -

SUBSTATION & TRANSMISSION PROJECTS 20410

PROJ #: 8009726

DRAWING NAME: PI2026CT2.DGN

DRAWING SET: PI2026

DRAWING #: 01 OF 01