NGS BIEB N02

UPS & Battery Charger

Replacement

Scope of Work

PWO 30626915 N01

PWO 30626916 N02

Revision 1 Jan.15.2021

Revision 2 Apr.20.2021

Revision 3 May 5, 2021 – Reference N02 only.

Revision 4 May 13, 2021 – Adherence to NFPA 70E / I&C pulls Fuses.

Revision 5 May 19, 2021 – Final Alarm Term Sheet Complete.

Revision 6 June 11, 2021 – New Cable for Charger Alms.

Table of Contents

Scope of Work

1.0 Materials Supplied & Work Done By UPS Manufacturer:

1.0.1 Supply one 320A 12 Pulse Battery Charger.

1.0.2 Supply one 30kVA PWM Inverter.

1.0.3 Supply one 40kVA Remote Manual Bypass Switch.

1.0.4 Provide two days of Start-Up Service for Commissioning/ Training.

1.0.5 Provide Test Results from Commissioning.

1.1 Materials Supplied & Work Done by Electrical Contractor:

1.1.1 Remove N02's Cyberex ISS and Cyberex charger.

1.1.2 Mount New Inverter and RMBS switch.

1.1.3 Mount New Battery Charger.

1.1.4 Run New Cables for New Equipment.

1.1.5 Crimp New Lugs for Cable Termination.

1.2 Work Done by JEA:

1.2.1 Perform Switching Operations for LOTO.

1.2.2 Terminate Alarm Wires in DCS Cabinet.

1.2.3 Build Alarm Screens for Power Plant Operations.

1.2.4 Assist in Commissioning - Training.

REFERENCE DRAWINGS		
Drawing Number	**By**	**Description**
121307	FW	Electrical – Power DC and UPS Systems Unit 1
121308	FW	Electrical – Power DC and UPS Systems Unit 2
124090	FW	Electrical – Power Elementary Wiring Unit 1
124091	FW	Electrical – Power Elementary Wiring Unit 2
5048 400A DC BREAKER	FW	Electrical – DC Breaker Information
E31EA3016C	JEA	DCS Cabinet N01
E32EA3014C	JEA	DCS Cabinet N02
118991	JEA	HVAC - Second Floor Plan

REFERENCE DOCUMENTATION		
File Name	**By**	**Description**
Ametek Battery Charger	Ametek	Battery Charger Brochure
Ametek Inverter	Ametek	Inverter Brochure
Ametek RMBS	Ametek	Remote Manual Bypass Switch
Attachment A	JEA	Cable and Wire Tags
Attachment B	JEA	Cable Tray PICS
Attachment C	JEA	B22 Channel for RMBS

Scope of Work

1.0 Materials Supplied & Work Done By UPS Manufacturer:

Ametek shall deliver one 320A Ametek DCR battery charger, one Ametek 30kVA PWM inverter and one 40kVA Remote Manual Bypass Switch. After the installations are complete, Ametek shall provide a Commissioning Service and provide training for up to four technicians on the same day. It is expected that two mobilizations shall be required and at least two days of commissioning services will be required. The equipment shall conform to the attached specification.

1.0.1 Supply one 320A twelve pulse Battery Charger

Ametek shall supply one new 320A Ametek, twelve pulse DCR battery charger with appropriate lifting eyes. The equipment shall be shipped on a wooden type pallet suitable for forklift handling and rigging. The equipment shall be covered with clear plastic sheeting or wrapping to prevent dust and dirt from entering the cabinet during shipment and storage. The corners and edges of the equipment shall be lined with material so that any banding or wrapping will not score the paint or bend any metal. All aspects of the battery chargers shall conform to the attached specification.

1.0.2 Supply one Ametek 30kVA PWM Inverter-static switch.

Ametek shall supply one new Ametek 30kVA inverter-static switches supplied with appropriate lifting eyes. The equipment shall be shipped on a wooden type pallet suitable for forklift handling and rigging. The equipment shall be covered with clear plastic sheeting over wrapping to prevent dust, dirt and moisture from entering the cabinet during shipment and installation. The corners of the equipment shall be lined with material so that any banding or wrapping will not score the paint or bend any metal. All aspects of the Inverter-Static Switch shall conform to the attached specification.

.

1.0.3 Supply one Ametek 40kVA Remote Manual Bypass Switch.

Ametek shall supply one new 50kVA Remote Manual Bypass Switch. The equipment shall be shipped on a wooden type pallet suitable for forklift handling and rigging. The equipment shall be covered with clear plastic sheeting over wrapping to prevent dust, dirt and moisture from entering the cabinet during shipment and installation. The corners of the equipment shall be lined with material so that any movement in shipping will not score the paint or bend any metal. All aspects of the Remote Manual Bypass Switches shall conform to the attached specification.

1.0.4 Provide two days of Start-Up Service for Commissioning/ Training.

Ametek shall provide two full 8 hour days of commissioning support for the inverter, battery charger and remote manual bypass switch. During the commissioning, three JEA technicians shall be allowed to start up, make switching operations, and shut down the equipment. The alarm circuits shall be tested by removing power to the system or by forcing points. The system shall be completely installed and ready to operate by 8:00 AM on the scheduled day for commissioning.

1.0.5 Provide Test Results from Commissioning.

Ametek shall provide test data from the manufacturing facility along with an operations manual, bill of material and job specific drawings. The Commissioning Service shall generate a System Testing Report that demonstrates conformance with IEEE 944-1986 Section 7.0 and IEC – 146 – 4.

1.1 Materials Supplied & Work Done by Electrical Contractor:

The awarded Electrical Contractor shall remove the existing N02 Cyberex Inverter, Battery Charger, and associated fittings. If an existing cable appears to be in good condition, has enough length to be dressed in completely and neatly, and will fit in the new terminations then it can be reused upon the JEA Project Manager's approval. The Electrical Contractor shall provide all cables, conduits, lugs, tools, consumables and supervision to successfully install the new UPS System in conformance with the National Electrical Code NFPA 70. The Electrical Contractor shall transport the new UPS System from the NGS Warehouse to the BIEB Electrical Building and provide a machine to lift the equipment into the MCC. **The contractor shall use an industrial grade hydraulic furniture mover such as a WESCO Hydraulic Furniture Mover part # 272952 (or equivalent) to move the battery charger or the inverter**. A standard pallet jack will not be an acceptable way of moving this equipment. There will be no assistance in rigging or providing straps to lift the new equipment by JEA. The Contractor shall provide and operate the lull needed to lift the new chargers, inverter-static switch, bypass switch, cables, conduit and fittings up to the steel grating; roughly twenty four (24') feet above grade as shown in Attachment B.

The standards for this work are as follows:

NFPA 70E
NFPA 70
Ametek Installation Manuals for Specified Equipment

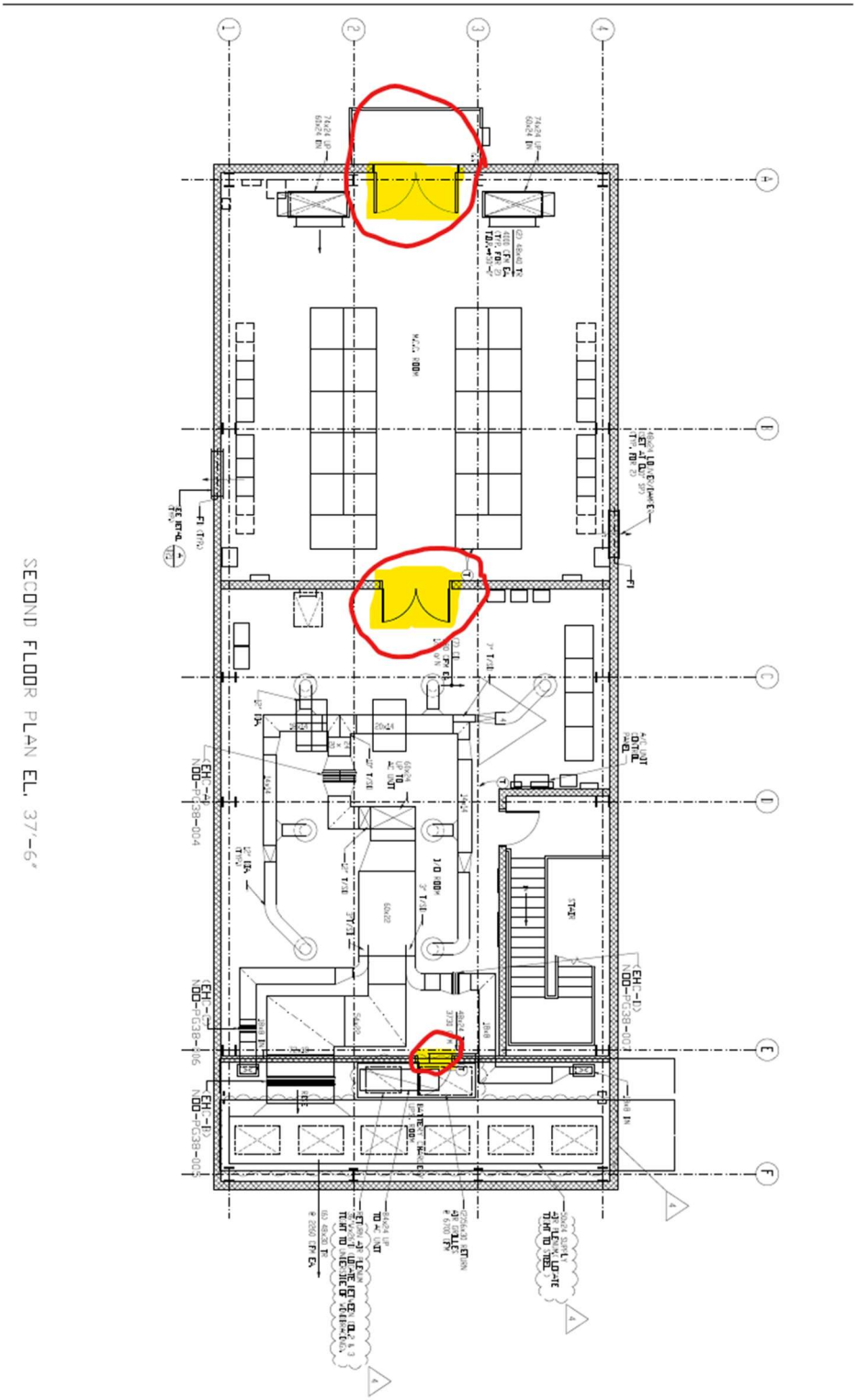

Second Floor BIEB: Floors are Fairly Smooth Concrete

MCC Threshold: 7’ Wide by 9’ High with Levers Removed.

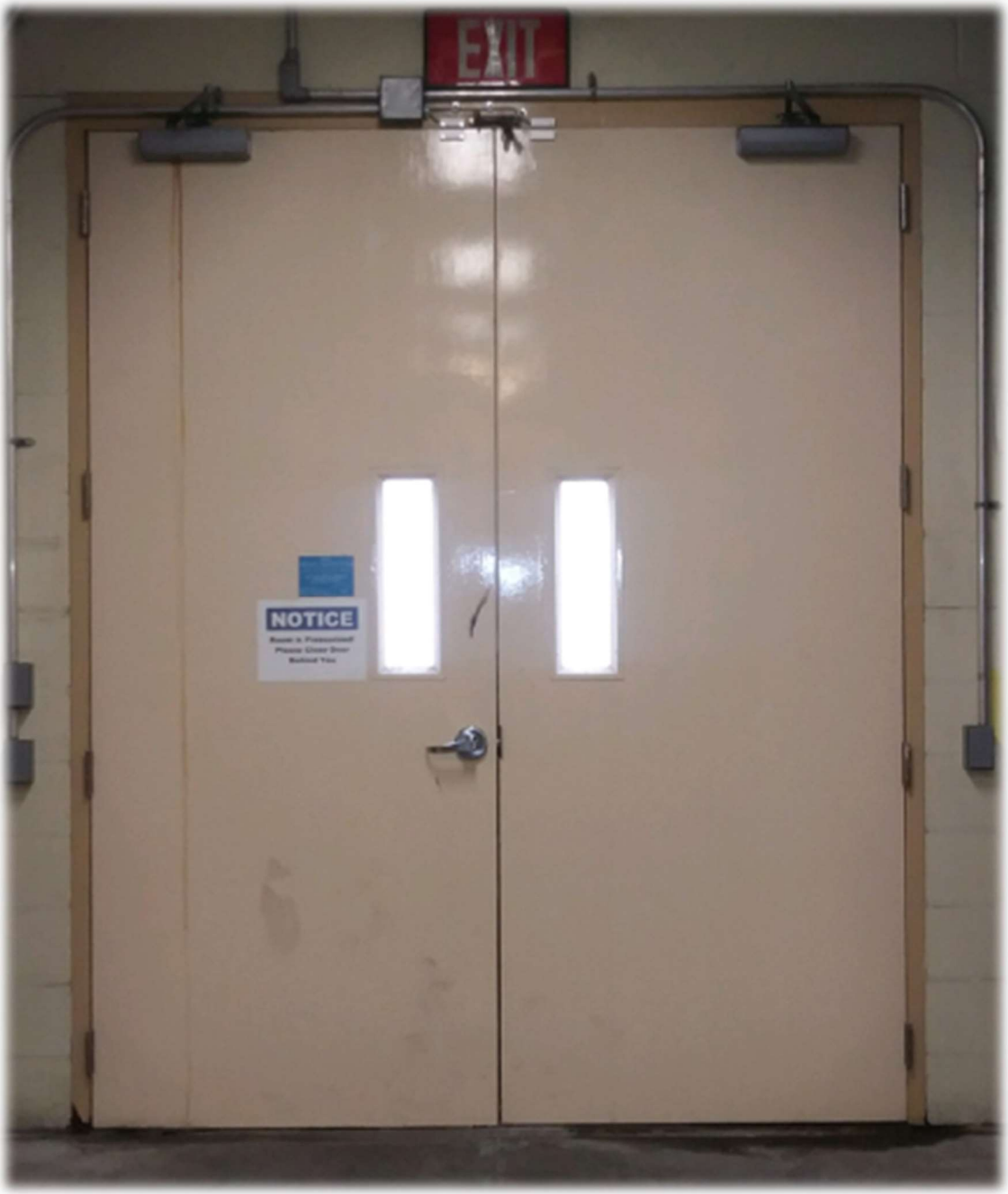

View From Inside MCC… Threshold: 7’ Wide by 9’ High.

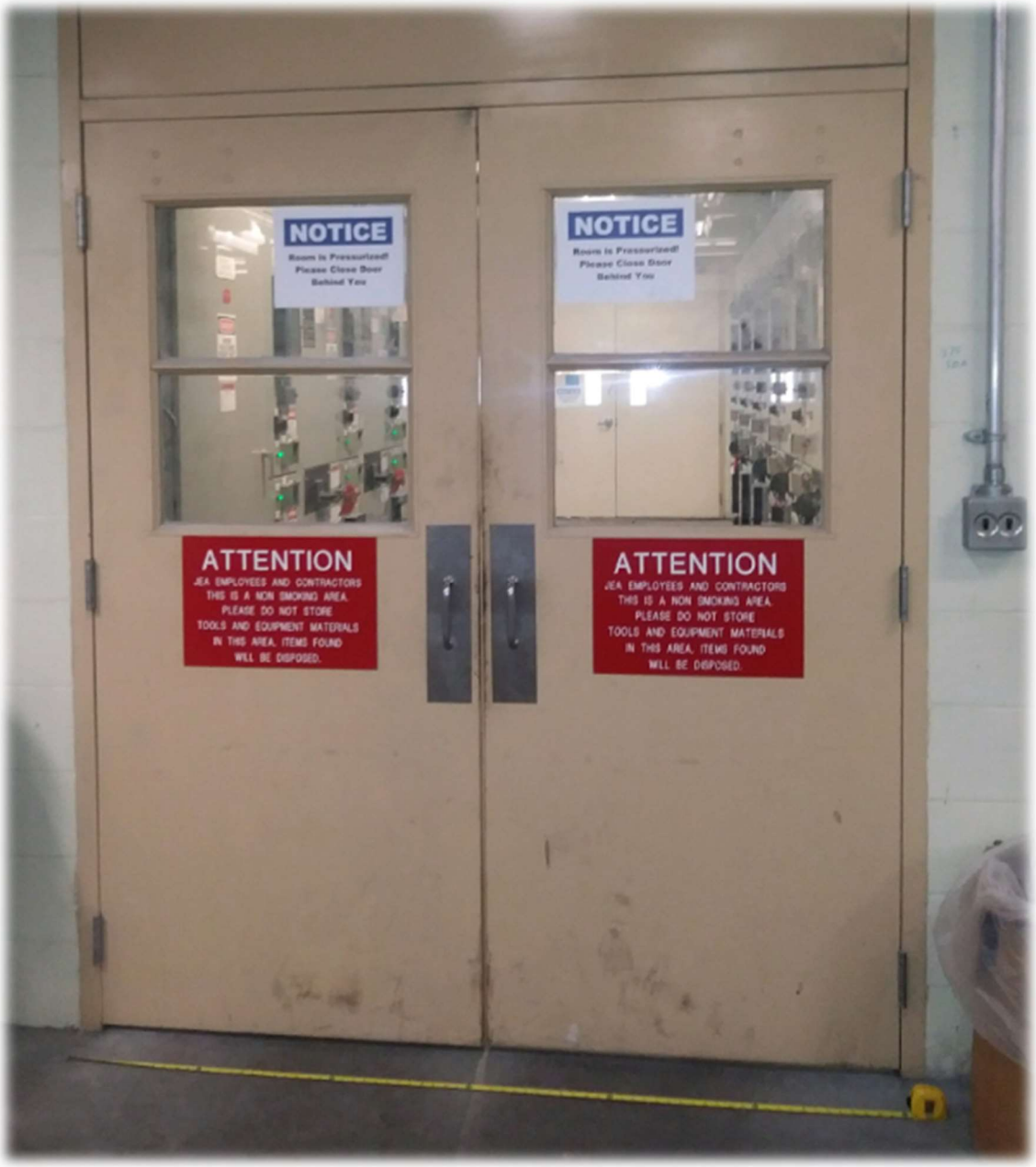

View From Inside DCS Room. Threshold: 6’ Wide by 83” High with Levers Removed.

JEA will not provide riggings or offer assistance in connecting straps to the existing load. The equipment shall be mounted on hydraulic furniture movers or equivalent as they will have to be moved from an exterior catwalk through an MCC and a DCS room, into the inverter room. T**he most constraining door (shown below)**, into the inverter room is 40” wide by 83.5” high with the door lever removed. The responsibility of being able to move the equipment safely into the MCC without damaging the equipment will be completely owned by the Contractor.

Inverter Room Threshold: 40” Wide by 83.5” High with Lever Removed.

1.1.1 Remove N02’s Cyberex ISS and Cyberex charger.

The Contractor shall remove one existing 400A Cyberex battery charger and one 40kVA Cyberex ISS which weigh 2250 and 1900lbs respectively. The Contractor shall provide and operate a lull needed to lower the charger and inverter from the MCC, roughly twenty four feet above grade, to the ground. JEA will not provide riggings or offer assistance in connecting straps to the load. The equipment shall be palletized or mounted on material suitable to rig off of the metal grating outside of the MCC. The method of removal shall not have any negative

consequence on other equipment, doors, doorframes, or thresholds. It is expected that the removal will damage the existing UPS equipment. The UPS equipment shall be palletized on the ground and depending on the condition of the equipment after removal, JEA may decide to keep it for spare parts until all of the UPS systems are replaced. The Contractor shall not keep the removed equipment unless a credit is given to JEA for the value of the equipment. The equipment can be staged inside of the DCS Room near the Northwest corner of the space. There is at least 10’ by 12’ of floor space available.

1.1.2 Mount New Inverters and RMBS switch.

The RMBS shall be mounted as close to the 50kVA bypass transformer as possible. The inverter shall be mounted inboard of the RMBS and the battery chargers will both be mounted furthest inboard. The inverter-static switch shall be floor mounted using half inch stainless steel expansion anchors with at least three inches of embedment using a flat washer and a hex nut. The RMBS switch shall be mounted on 12 Gauge B22 Channel as shown in Attachment C. The RMBS Stands shall be floor mounted using 5/8 inch stainless steel expansion anchors with at least three inches of embedment using a flat washer and a hex nut. The bolts should be 4 inches long.

N01 and N02 CHARGERS, INVERTERS, AND RMBS'.

1.1.3 Mount New Battery Charger.

The Electrical Contractor shall mount the N02 battery charger inboard of the inverter shown above. The battery chargers shall be floor mounted using half inch stainless steel expansion anchors with three inches of embedment using a flat washer and a hex nut.

1.1.4 Run New Cables for New Equipment.

The Electrical Contractor shall provide and install new cables for the new equipment shown on the drawings in red. The list is shown below. The only cable on N02 that shall be salvaged is the inverter alarm cable.

The RMBS switch shall have an eight pair 14 awg tray rated cable ran to the N2-6F cabinet. These cables will be ran in the overhead in cable tray. In the tables shown below, there are cable tags and individual wire tags. Some of the quantities are for groups of alarms that are utilizing a common hot and all of the new alarms for the RMBS utilize an independent channel per alarm.

All of the cables shall be ran through chase nipples on the charger, inverter, and RMBS. **When penetrating the enclosures with knock-outs or hole-saws, the cable entry plate shall be removed, and drilled at an alternate location to the equipment as to avoid getting metal shavings inside the equipment.**

N02 Cable Tags	Origin	Destination	Cable Type	Cable Size	Quantity
209-01CL POSITIVE	BATTERY CHARGER	125V DC PANEL	RHH-RHW-2 DLO	500MCM	2
209-01CL NEGATIVE	BATTERY CHARGER	125V DC PANEL	RHH-RHW-2 DLO	500MCM	2
209-02CL POSITIVE	125V DC CABINET	INVERTER	RHH-RHW-2 DLO	500MCM	2
209-02CL NEGATIVE	125V DC CABINET	INVERTER	RHH-RHW-2 DLO	500MCM	2
209-04CL2 120VAC BYPASS SW TO INV	BYPASS SWITCH	INVERTER	RHH-RHW-2 DLO	500MCM	2
209-04CL2 NEUTRAL BYPASS SW TO INV	BYPASS SWITCH	INVERTER	RHH-RHW-2 DLO	500MCM	2
209-05CL2 120VAC INV OUTPUT	INVERTER	BYPASS SWITCH	RHH-RHW-2 DLO	500MCM	2
209-05CL2N NEUTRAL INV OUTPUT	INVERTER	BYPASS SWITCH	RHH-RHW-2 DLO	500MCM	2
209-04CL	BYPASS XFMR	BYPASS SWITCH	RHH-RHW-2 DLO	500MCM	2
209-04CLN	BYPASS XFMR	BYPASS SWITCH	RHH-RHW-2 DLO	500MCM	2
209-05CL 120VAC SW TO AC PANEL	BYPASS SWITCH	N02 UPS PANEL	RHH-RHW-2 DLO	500MCM	2
209-05CLN NEUTRAL SW TO AC PANEL	BYPASS SWITCH	N02 UPS PANEL	RHH-RHW-2 DLO	500MCM	2
204-05P	480V MCC 721	Battery Charger	XHHW-2	3/C #2 w/#6 GND	2
204-05P A PHASE	480V MCC 721	Battery Charger	XHHW-2	#2	2
204-05P B PHASE	480V MCC 721	Battery Charger	XHHW-2	#2	2
204-05P C PHASE	480V MCC 721	Battery Charger	XHHW-2	#2	2
026.2-01C BATT CHRGR ALARMS	BATTERY CHRGR	N2-6F-1C		8 PAIR # 14	2
026.2-01C LOW AC INPUT	J2 - 1 + J2 - 3	"1C" TB1:1 + TB1:2 -			4
026.2-01C HIGH DC VOLT	J2 - 4 + J2 - 6	"1C" TB3:3 + TB3:4 -			4
					2
026.2-01C NEG GND	J2 - 10 + J2 - 12	"1C" TB1:1 + TB1:6 -			2
026.2-01C POS GND	J3 - 1 + J3 - 3	"1C" TB1:1 + TB1:8 -			2
					4
026.2-01C CHRGR COMMON	901 + 903	"3C" TB3:1 + TB3:2 -			4
026.2-01C LOW DC VOLT	904 + 906	"1C" TB1:1 + TB1:4 -			2
026.2-02C INVERTER ALARMS	INVERTER	N2-6F-1C		8 PAIR # 14	2
026.2-02C ALT LINE FAILURE	J3 - 4 + J3 - 5	"1C" TB4:1 + TB4:2			4
026.2-02C OUT OF SYNC	J3 - 1 + J3 - 3	"1C" TB4:1 + TB4:4			2
026.2-02C LOW OUTPUT VOLTAGE	J3 - 7 + J3 - 9	"1C" TB4:1 + TB4:6			2
026.2-02C STATC SW ON ALT	J2 - 4 + J2 - 5	"1C" TB4:1 + TB4:8			2
026.2-02C LOW DC VOLTAGE	J2 - 10 + J2 - 12	"1C" TB3:1 + TB3:2			4
026.2-02C INV COMMON ALM	J2 - 1 + J2 - 3	"1C" TB2:1 + TB2:2 -			4
026.2-03C RMBS ALARMS	RMBS	N2-6F-3C & 4C		8 PAIR # 14	2
026.2-03C NORM SOURCE TO LOAD	COM. N.O.	"3C" TB3:1 + TB3:2		1 PAIR # 14	4
026.2-03C BYPASS TO LOAD	COM. N.O.	"3C" TB1:7 + TB1:8		1 PAIR # 14	4
026.2-03C ISOLATED BYPASS	COM. N.O.	"3C" TB2:1 + TB2:2		1 PAIR # 14	4
026.2-03C IN SYNC	COM. N.O.	"4C" TB1:5 + TB1:6		1 PAIR # 14	4
026.2-03C BYPASS SOURCE AVAILABLE	COM. N.O.	"4C" TB1:7 + TB1:8		1 PAIR # 14	4
026.2-03C NORMAL SOURCE AVAILABLE	COM. N.O.	"4C" TB2:1 + TB2:2		1 PAIR # 14	4

Attachment A: New Cables Tags to be Provided by Electrical Contractor.

1.1.5 Crimp New Lugs for Cable Terminations.

The Electrical Contractor shall use the Ametek recommended Burndy lug for each termination. The connections shall be made by compression with a die crimped, 600V rated, copper tin plated, Burndy lug. The lugs shall be bolted down to the bus bar with 316 stainless steel hardware. Each bolt shall be torqued onto the bus using flat washers and lock washers, to the torque specification for each bolt per the Ametek specification. Each bolt shall have at least two threads showing and no more than four after the bolt is torqued down. For each alarm wire connection, the Electrical Contractor shall use T&B Ring Terminals with appropriate T&B Crimpers. The Contractor shall be responsible for terminating 6 pair for the inverters, 6 pair for each charger, and 6 pair for each RMBS. The terminations shall be made by JEA in the DCS cabinet for the RMBS switch. The terminations are already made for the chargers and inverters except for the Common alarms. The fuses shall be pulled by JEA I&C prior to de-terminating existing equipment. All new wire tags are listed in Attachment A.

1.2 Work Done by JEA:

JEA shall provide site access and site specific safety training. It shall be the contractor's responsibility to acquire the JEA Contractor Safety Qualification. The Contractor will start by filling out the questionnaire that can be found at:

https://www.jea.com/About/Procurement/Contractor_Safety/

Any questions regarding Contractor Safety Qualification shall be directed to Jerry Fulop. Jerry can be reached directly at 904.665.5810 or by emailing him at FuloJE@jea.com . The Lock-Out, Tag-Out (LOTO) system utilized by JEA requires that the JEA Project Manager sign onto an electronic clearance utilizing lock boxes for keys that go to locks that secure each point on the clearance. The Contractor can sign onto a hard copy that is assigned to the clearance or work underneath the JEA Project Manager. This process should be discussed prior to the Contractor submitting a bid as this can be time consuming and can be a point of disagreement between two parties that have different policies. At least one JEA Electrician, one JEA Operator, and one JEA I&C Technician shall be on site to assist during commissioning. JEA Engineering shall provide a scope of work, drawings, schematics and address any questions regarding the installation for the contractor.

1.2.1 Perform Switching Operations for LOTO.

JEA shall provide access to all spaces and access to the front gate of the plant. JEA shall also provide plant personnel to conduct breaker and disconnect operations

needed for LOTO. A LOTO walk down sheet will be provided, and all breaker and disconnect operations will be completed by JEA Operations.

1.2.2 Terminate Alarm Wires in DCS Cabinet.

JEA shall be responsible for terminating circuit breakers inside of each power panel. JEA shall also be responsible for terminating 18 pairs of alarm wires inside of the DCS Cabinet. The Alarm Cables shall be ran to Card XXX for the RMBS and are mostly already terminated in the DCS cabinet for the chargers and inverters. At least 10 feet of slack shall be pulled through the cable entry in the top of the cabinet so that the cable can be properly dressed in to match the existing cable routing and to provide service loop. JEA shall provide the following:

1.2.3 Build Alarm Screens for Power Plant Operations.

JEA Engineering Shall redesign alarm screens for the Operators at NGS. The graphics shall mimic the screens on the new equipment so that when an Operator is in the field looking at the HMI there is a resemblance of what is displayed in the control room.

1.2.4 Assist in Commissioning – Training.

JEA shall assist Ametek in switching operations to conduct the system commissioning and alarm testing. Operations and Electricians shall be available to communicate from the field to the control room so that the alarms can be verified to function correctly.

N02 BIEB UPS SYSTEM

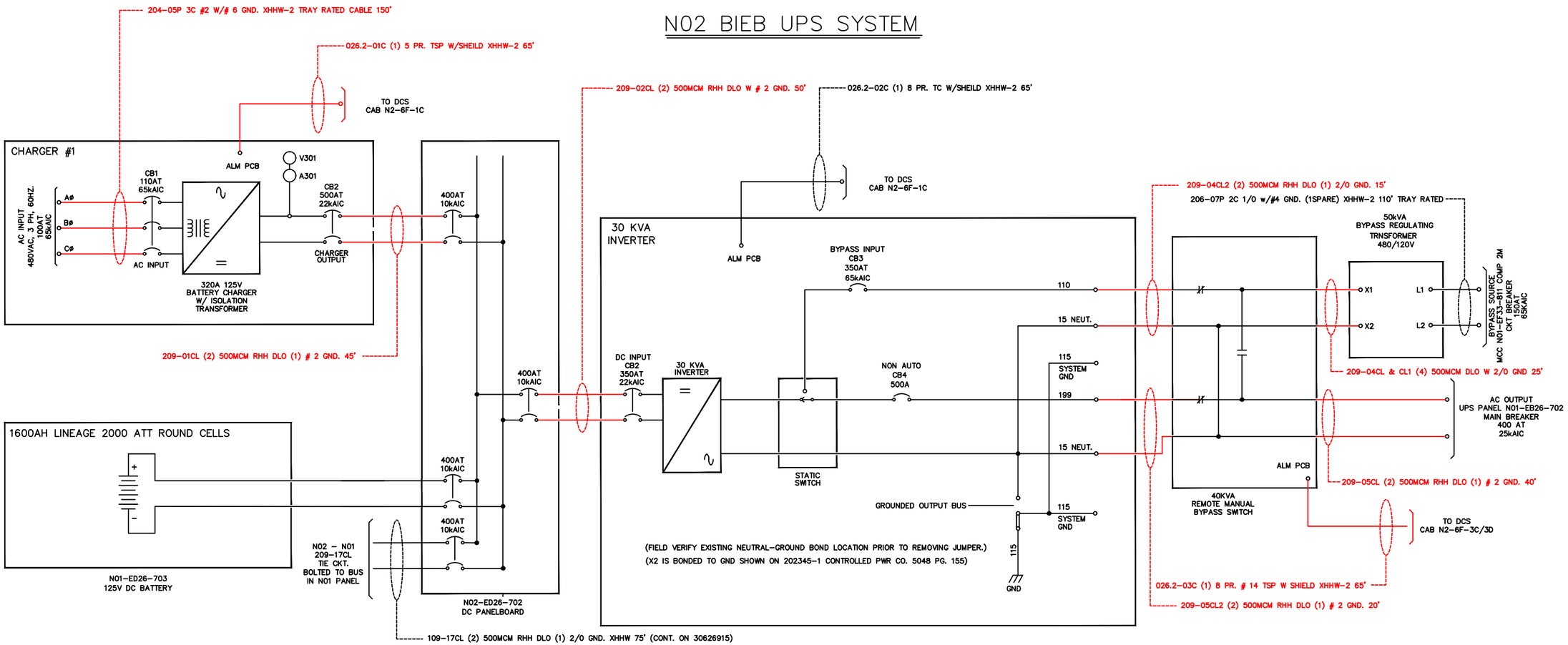

NOTES:
1. RED LINES INDICATE NEW WIRING, BREAKERS SUPPLIED AND INSTALLED BY ELECTRICAL CONTRACTOR.
2. ALARM CABLES TO BE REUSED WHERE SHOWN IN BLACK.
3. BATTERY CHARGER, INVERTER-STATIC SWITCH, AND RMBS ARE NEW.
4. BATTERY, DC PANEL, AND CABLE TRAY ARE EXISTING.
5. THE TIES SHALL BE OPENED FOR WORK IN DC PANEL OR UPS PANEL.
6. BATTERY BREAKER SHALL BE OPENED TO WORK IN DC PANEL.
7. MATCH GROUND CONDUCTOR SIZE IF AND ONLY IF COMPLIANT WITH NEC 250.
8. GND CONDUCTORS SHALL HAVE GREEN RHH DLO INSULATION.

REV NO.	DRWN BY	DATE	DESCRIPTION	APPR BY
2	BDB	JUN / 11 / 2021	NEW ALM CABLE FOR N02 BATT CHARGER.	BDB
1	BDB	MAY / 6 / 2021	INSULATION TYPE CORRECTIONS - ALL CABLE DLO EXCEPT FOR 3 PHASE FEEDER AND ALM CABLE.	BDB
0	BDB	JAN / 7 / 2021	N02 BIEB UPS SYSTEM DRAWING	BDB

N02 BIEB UPS SYSTEM

-

JEA Building Community

PROJ No: 30626916

SCALE: (24x36)

SHEET No: 1 of 1

DWG. NO: 30626916 - E01

BOM Component List

AMETEK Solid State Controls

Assembly Item: **94002357-1-1** REV: **A**
Description : **DPI030-12-12-60-K^^ 030KVA INV, 120/120/60HZ**

Component Item	Component Description	Revision	Quantity	UOM	Comments
03-010111-00	CAP,ELC,15400UF,200V	A	12	EA	C1
03-020120-00	CAP,AC,200UF,120V,+/-6%	A	15	EA	C2
03-040044-00	CAP, 2UF, 20%, 270VAC/400VDC, MET, AXIAL	A	2	EA	C4,C3
03-040078-00	CAP,0.56UF,1200VDC,POLYPROPYL	A	6	EA	C5-10
03-050000-00	NETWORK,R-C,100OHM,.1UF,600V	A	3	EA	U
03-160001-00	CABLE ASSY, PANEL MOUNT USB	A	1	EA	
03-351101-50	CT,1000/0.2A,1%,1 TURN	A	1	EA	CT3
03-351500-50	CT,500/0.2A,1%,1 TURN	A	1	EA	CT4
03-358018-00	POWER SUPPLY,100W	A	2	EA	PCB17,18
03-471015-00	FAN,TUBEAXIAL,230CFM,	A	3	EA	FN1-3
03-625112-00	SCR,250AMP 1200V,DUAL PACK	A	2	EA	SCR7-10
03-657003-10	XSTR, IGBT MOD, 300A, 600V DUAL	A	6	EA	Q1-12
03-713503-25	CB, 350A, 3P, 600/250, 18/22K	A	2	EA	CB2,CB3
03-714001-35	MCS,400A,600VAC,35K	A	1	EA	CB5
03-720005-10	CB, STR, 120VAC, LS	A	1	EA	CB3 STR
03-720005-12	CB, STR, 125VDC, LS	A	1	EA	CB2 STR
03-720007-20	CB, AUX, 1SPDT, RS, 240/125V	A	1	EA	CB2 AUX
03-730107-00	SW,PB,DPST,10A,250V AC/DC	A	1	EA	SW20
03-739011-20	THERMO,SNAP DISC,5A,120VAC,	A	2	EA	TH2,3
03-740005-00	RELAY 4PDT 3 AM,12VDC NOTE: GOLD DIFFUSED SILVER CONTACTS ON THIS RELAY	A	2	EA	RLY1,2
03-751101-00	FUSE,10A,600VDC,.406 X 1.50	A	1	EA	FU20
03-752523-00	FUSE,500A,300VAC/DC,SEMI	A	1	EA	FU7
03-820505-01	RES,50K OHM 5W 1%	A	1	EA	R10
03-828102-00	RES,10 OHM 100W 10%	A	1	EA	R20

BOM Component List

AMETEK Solid State Controls

Component Item	Component Description	Revision	Quantity	UOM	Comments
03-880401-05	SHUNT,400A,100MV	A	1	EA	SH1
03-891154-00	RES,1.5K OHM,30W,5%,	A	4	EA	R
80-118130-90	SWITCH ROTARY SPST MAINTAINED	A	1	EA	SW2
80-230202-90	PCB ASSY POWER DISTR 120VDC $#	E	1	EA	PCB16
80-231202-90	PCB ASSY 1PH INV GATE DRIVE $#	C	2	EA	PCB4,5
80-233000-90	PCB ASSY,1PH ST/SW GATE DRIVE#	F	1	EA	PCB11
80-246000-90	PCB ASSY, DISPLAY CONTROL, COLOR DISPLAY BOARD	U	1	EA	PCB13
80-247104-90	PCB ASSY,EIGHT RELAY BOARD	C	1	EA	PCB19
80-248200-90	PCB ASSY, INV/STSW CTRL, 120VAC 120VDC, PARALLEL #	G	1	EA	PCB3,3A
80-313992-90	XDC35-60 240/120, 0.084mH	B	1	EA	L3
80-316069-90	XIS30 120/120 60 HZ	D	1	EA	TF2

BOM Component List

AMETEK Solid State Controls

Assembly Item: **94002357-2-1** REV: **A**
Description : **RS400MBC-12^^ 040KVA MBS,120/1P CUSTOM**

Component Item	Component Description	Revision	Quantity	UOM	Comments
03-734510-08	SW, MNL, 3POS, 510A, 600V, 1P	A	1	EA	S800
03-750201-30	FUSE,2A,600VAC/300VDC	A	1	EA	F801
80-223904-90	PCB ASSY,MBS SYNC,DC ALM,	E	1	EA	X800

BOM Component List

AMETEK Solid State Controls

Assembly Item: **94002357-3-1** REV: **A**
Description : **DCR-120-0320-480-3-60-06-100-B^^ 320AMP CHR,480/120/3PH/60HZ/6P/100CL**

Component Item	Component Description	Revision	Quantity	UOM	Comments
03-010111-00	CAP,ELC,15400UF,200V	A	2	EA	C309
03-358012-24	PWR SUPPLY,85-264VAC/120-370	A	1	EA	PCB5
03-471009-00	FAN,W/ALARM,115VAC,106CFM	A	2	EA	FN1,2
03-471015-00	FAN,TUBEAXIAL,230CFM,	A	1	EA	FN305
03-600250-00	DIODE 250 AMP 300V FWD (3/4")	A	1	EA	D1
03-602200-00	DIODE,2200A,3600V,HCKY PUCK	A	1	EA	D305
03-625110-00	SCR,168A,1200V,DUAL PACK	A	6	EA	SCR1-6,19-24
03-711103-30	CB,110A,3P,600/250V,25/42K	A	1	EA	CB1
03-715003-25	CB,500A,3P,600/250V,18/22K	A	1	EA	CB2
03-739011-20	THERMO,SNAP DISC,5A,120VAC,	A	1	EA	TH1
03-739019-00	THERMO,SNAP DISC,12A,120V,N.O.	A	1	EA	TH302
03-752213-00	FUSE 200A 250VAC (MIN) SEMI	A	6	EA	FU1-3,FU11-13
03-752723-00	FUSE,700A,300VAC/DC,SEMI	A	1	EA	FU8
03-880501-02	SHUNT,500A,100MV	A	1	EA	SH1
03-891154-00	RES,1.5K OHM,30W,5%,	A	1	EA	R309
80-210500-90	PCB ASSY SUPPRESSOR DC NOISE$#	B	1	EA	PCB3
80-212901-90	PCB ASSY SUPPRES'R AC NOISE $#	B	2	EA	PCB25,31
80-224900-90	PCB ASSY,CHARGER GATE DRIVE $#	D	1	EA	PCB32
80-230501-90	PCB ASSY,FAN FAILURE 2 FANS $#	A	1	EA	PCB23
80-239500-90	PCB ASSY, CHG INTERFACE BOARD	T	1	EA	PCB1
80-239600-90	PCB ASSY, CHG DISPLAY BOARD	W	1	EA	PCB4
80-247104-90	PCB ASSY,EIGHT RELAY BOARD	C	1	EA	PCB19
80-314943-90	XDC300 140VDC .350MHY 115%CL V	C	1	EA	L1
80-315614-90	XIS40 140V 60 HZ V	C	1	EA	TF5
80-317644-90	XDW325, 480/120, 60HZ, 12P, EI 3.25, 6.00"STK, INPUT RANGE:	B	1	EA	TF1

BOM Component List

AMETEK Solid State Controls

Component Item	Component Description	Revision	Quantity	UOM	Comments
	432-528VAC				
80-570012-90	10" FAN WITH GUARD AND SENSOR	A	2	EA	FN3,4

AMETEK SOLIDSTATE CONTROLS
875 Dearborn Drive
Columbus, Ohio 43085
(614) 846-7500
Fax (614) 885-3990

Document Transmittal

Joseph Young
younjp@jea.com

Jason Behr
behrjv@jea.com

Blakney D. Bobitt
bobibd@jea.com

Bill Donovan
donowt@jea.com

Sales Order # 94002357 **Transmittal #** T1 **Your Project Administrator:** Vivian Andrade **Ext:** 6251

Purchase Order # 197086 **Date:** 05/07/21 **Deliver Via:** AMEFEX **ED/DCS:** JD /JLC

# Prints	Electronic Media *	Document Number	Document Description	Revision Level	Action Code	Client Reference #
	W	94002357-1-1	COMPONENT LIST/BILL OF MATERIAL, 30KVA DPI INVERTER	A	1	
	W	94002357-10-001001	OUTLINE, 30KVA DPI INVERTER	A	1	
	W	94002357-20-001002	SCHEMATIC, 30KVA DPI INVERTER	A	1	
	W	94002357-2-1	COMPONENT LIST/BILL OF MATERIAL, 40KVA RMBS	A	1	
	W	94002357-10-002001	OUTLINE, 40KVA RMBS	A	1	
	W	94002357-20-002002	SCHEMATIC, 40KVA RMBS	A	1	
	W	94002357-3-1	COMPONENT LIST/BILL OF MATERIAL, 320 AMP DCR BATTERY CHARGER	A	1	
	W	94002357-10-003001	OUTLINE, 320 AMP DCR BATTERY CHARGER	A	1	
	W	94002357-20-003002	SCHEMATIC, 320 AMP DCR BATTERY CHARGER	A	1	

*** Format: C = CD D = Diskette E = E-mail W = Web posting**

Action Code For *Vendor* Transmittals

A) Approved – Manufacturer may proceed. Submit As-Built Documents.
B) Approved as Noted – Revise and resubmit for distribution – Manufacturing may proceed.
C) Not Approved – Requote per Returned Submittals Routing Sheet – Do not proceed.
D) Approved as Noted per Comments and Requote Attached – Revise and resubmit for distribution – Manufacturing may proceed.
E) Approved as Noted per Comments – Revise and Resubmit for Distribution
F) For Information Only
G) Review Comments – Discuss with
Z) Correct Drawing and Resubmit Immediately – No Drawing Revision Required

Action Code For *Client* Transmittals

1) Initial Approval Drawing - Manufacturing will not proceed until drawings are approved and returned (Approval required)
2) Revised Approval Drawing - Manufacturing will not proceed until drawings are approved and returned (Approval required)
3) Approved Drawing - Not subject to change. Manufacturing is proceeding. (No approval required)
4) Drawing For Reference Only - Not subject to change from specification. Manufacturing is proceeding (No approval required)
5) Final Certified Documents - (No approval required)
6) Custom Stamp, See Attached

Note to Client: Items with action code (1) to be returned to AMETEK SOLIDSTATE CONTROLS within 2 weeks after date of this transmittal. Any delay beyond this may have an impact on the shipping date of your equipment. Should you have any questions concerning this documentation package, please call 1-800-635-7300 and ask for your Project Administrator shown above.

AMETEK SOLIDSTATE CONTROLS
875 Dearborn Drive
Columbus, Ohio 43085
(614) 846-7500
Fax (614) 885-3990

Document Transmittal

Joseph Young
younjp@jea.com

Jason Behr
behrjv@jea.com

Blakney D. Bobitt
bobibd@jea.com

Bill Donovan
donowt@jea.com

Sales Order # 94002357 **Transmittal #** T1 **Your Project Administrator:** Vivian Andrade **Ext:** 6251

Purchase Order # 197086 **Date:** 05/07/21 **Deliver Via:** AMEFEX **ED/DCS:** JD /JLC

# Prints	Electronic Media *	Document Number	Document Description	Revision Level	Action Code	Client Reference #
	W	94002357-1-1	COMPONENT LIST/BILL OF MATERIAL, 30KVA DPI INVERTER	A	1	
	W	94002357-10-001001	OUTLINE, 30KVA DPI INVERTER	A	1	
	W	94002357-20-001002	SCHEMATIC, 30KVA DPI INVERTER	A	1	
	W	94002357-2-1	COMPONENT LIST/BILL OF MATERIAL, 40KVA RMBS	A	1	
	W	94002357-10-002001	OUTLINE, 40KVA RMBS	A	1	
	W	94002357-20-002002	SCHEMATIC, 40KVA RMBS	A	1	
	W	94002357-3-1	COMPONENT LIST/BILL OF MATERIAL, 320 AMP DCR BATTERY CHARGER	A	1	
	W	94002357-10-003001	OUTLINE, 320 AMP DCR BATTERY CHARGER	A	1	
	W	94002357-20-003002	SCHEMATIC, 320 AMP DCR BATTERY CHARGER	A	1	

*** Format: C = CD D = Diskette E = E-mail W = Web posting**

Action Code For *Vendor* Transmittals

A) Approved – Manufacturer may proceed. Submit As-Built Documents.
B) Approved as Noted – Revise and resubmit for distribution – Manufacturing may proceed.
C) Not Approved – Requote per Returned Submittals Routing Sheet – Do not proceed.
D) Approved as Noted per Comments and Requote Attached – Revise and resubmit for distribution – Manufacturing may proceed.
E) Approved as Noted per Comments – Revise and Resubmit for Distribution
F) For Information Only
G) Review Comments – Discuss with
Z) Correct Drawing and Resubmit Immediately – No Drawing Revision Required

Action Code For *Client* Transmittals

1) Initial Approval Drawing - Manufacturing will not proceed until drawings are approved and returned (Approval required)
2) Revised Approval Drawing - Manufacturing will not proceed until drawings are approved and returned (Approval required)
3) Approved Drawing - Not subject to change. Manufacturing is proceeding. (No approval required)
4) Drawing For Reference Only - Not subject to change from specification. Manufacturing is proceeding (No approval required)
5) Final Certified Documents - (No approval required)
6) Custom Stamp, See Attached

Note to Client: Items with action code (1) to be returned to AMETEK SOLIDSTATE CONTROLS within 2 weeks after date of this transmittal. Any delay beyond this may have an impact on the shipping date of your equipment. Should you have any questions concerning this documentation package, please call 1-800-635-7300 and ask for your Project Administrator shown above.

REV.	DATE	REVISION RECORD	DWN	APP.
A	05-04-21	INITIAL RELEASE	JD	SK

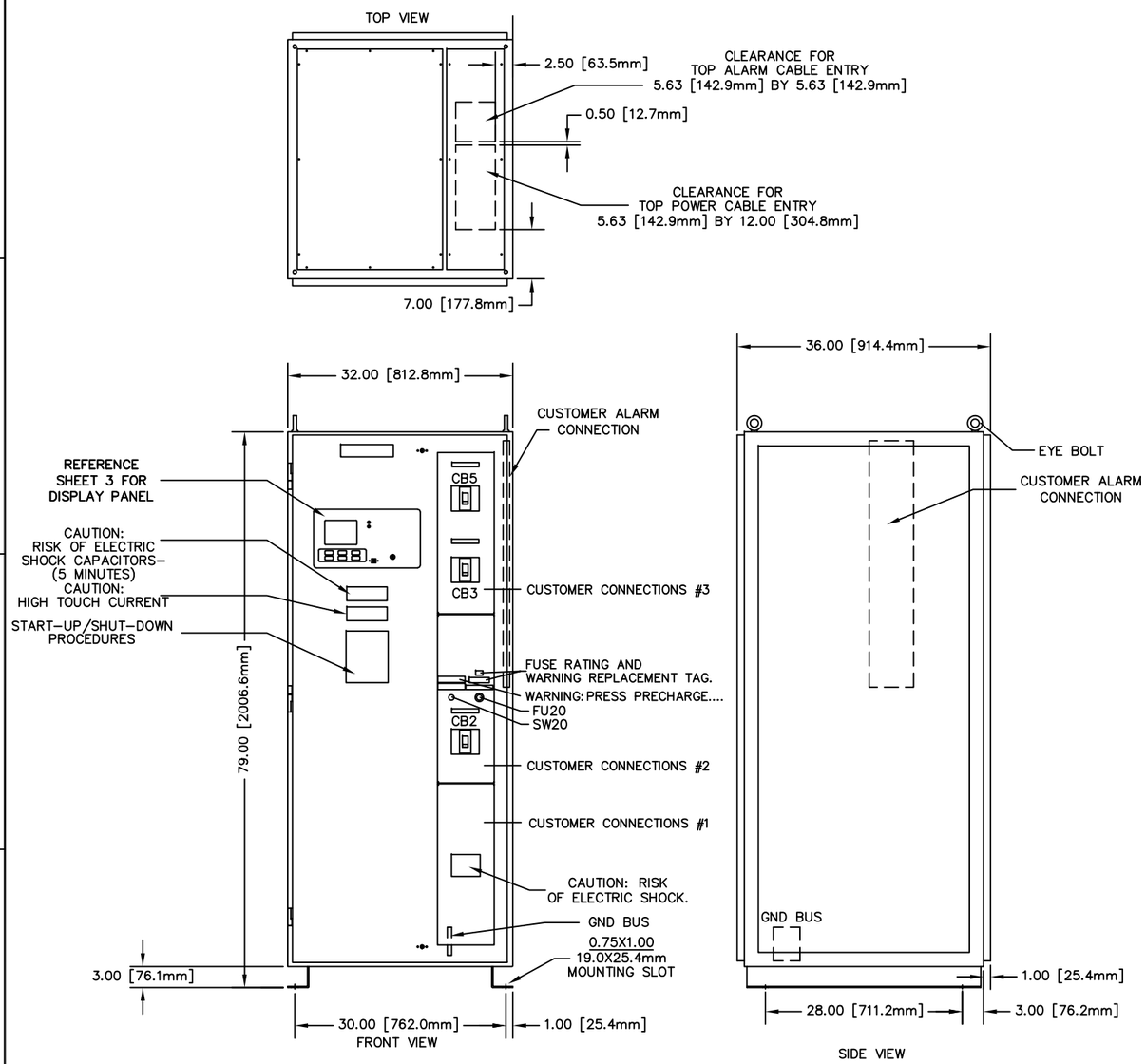

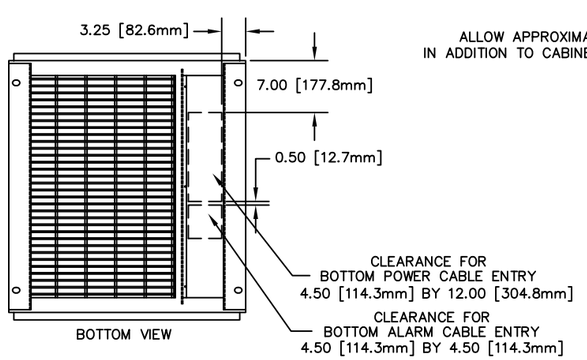

ALLOW APPROXIMATELY 0.500 INCH [12.7mm]
IN ADDITION TO CABINET DEPTH FOR PANEL CONTROLS.

FRONT PANEL IDENTIFICATION

CB2	DC INPUT	CIRCUIT BREAKER
CB3	BYPASS INPUT	CIRCUIT BREAKER
CB5	INVERTER OUTPUT	CIRCUIT BREAKER
SW2	INVERTER ENABLE-OFF/ON	SWITCH
SW20	PRECHARGE PUSHBUTTON PRESS.....	PUSHBUTTON
FU20	PRECHARGE FUSE	FUSE

NOTES

- DIMENSIONS AND WEIGHTS ARE SHOWN IN ENGLISH UNITS [METRIC].
- ALL CABINET DIMENSIONS ARE +/- 0.125 (INCH)/3.18mm TOLERANCE.
- PADLOCK DEVICE FOR ALL BREAKERS SUPPLIED.
- CABINET LIFTING EYE BOLTS SUPPLIED.

30KVA INVERTER SYSTEM

MODEL NO. DPI030-12-12-60-K
APPROX WT. 1200 LBS./545 kgs.
HEAT LOSS 12236 BTU/HR.

P.O. NO. 197086

LICENSED INFORMATION

AMETEK SOLIDSTATE CONTROLS
875 DEARBORN DRIVE
COLUMBUS, OHIO 43085

2.10
0000

DRAWN BY	DATE	REFERENCE
JD	05-04-21	
APPVD. BY	DATE	TITLE
SK	05-04-21	OUTLINE
SIZE	SCALE	INVERTER 30KVA/24KW
D	1:10	105-140VDC,120VAC,1ø,60Hz
WIRE NO. AVAIL	DWG. NO. 10- 001001	SH 1 OF 4 / PROJECT NO. 94002357

AMETEK SOLIDSTATE CONTROLS HALF SIZE DRAWING

REV.	DATE	REVISION RECORD	DWN	APP.
A	05-04-21	INITIAL RELEASE	JD	SK

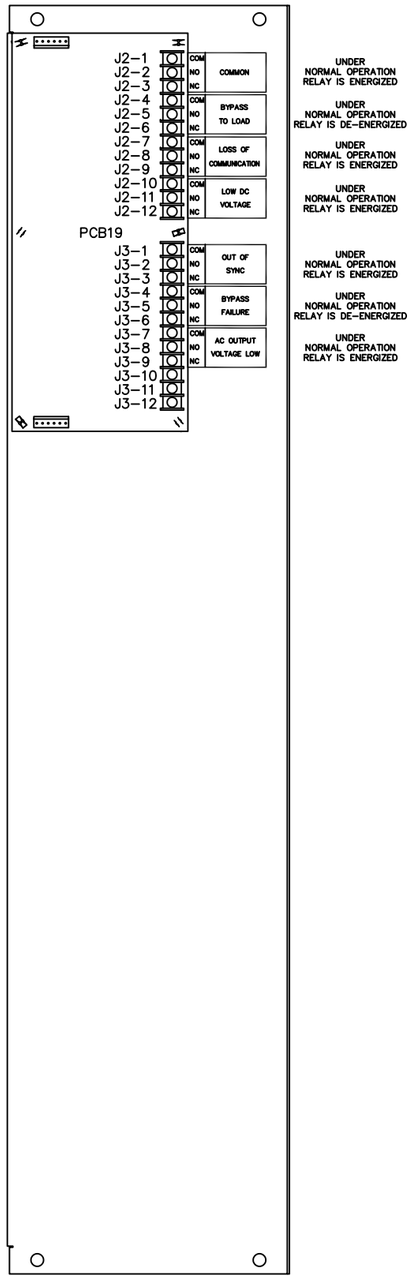

CUSTOMER ALARMS SHOWN

BLOCK DIAGRAM

30 KVA INVERTER

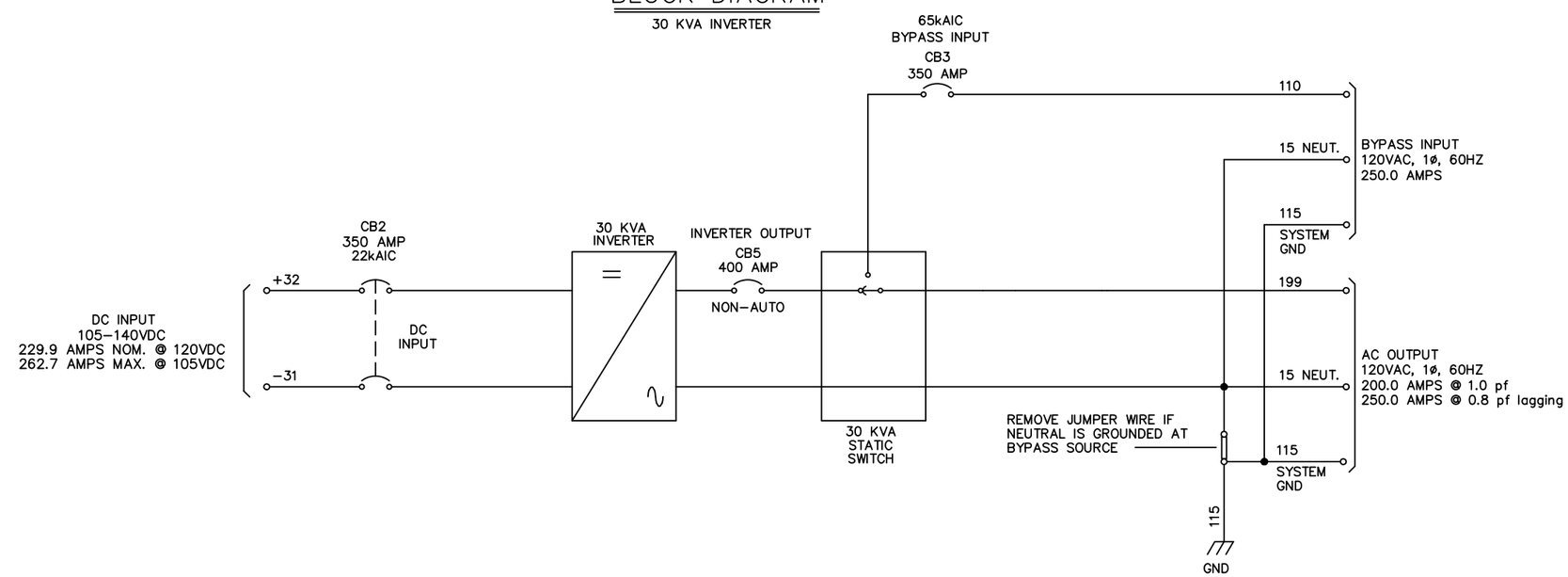

START-UP PROCEDURE

- CLOSE BYPASS INPUT BREAKER.
- CLOSE INVERTER OUTPUT BREAKER.
- PRESS THE PRECHARGE PUSHBUTTON UNTIL DC VOLTAGE ON DISPLAY SCREEN REACHES NOMINAL DC VOLTAGE.
- CLOSE DC INPUT BREAKER.
- PLACE INVERTER IN OPERATION BY TRANSFERRING THE INVERTER ENABLE SWITCH TO THE ON POSITION.
- WAIT 10 SECONDS FOR THE INVERTER TO REACH NOMINAL OUTPUT VOLTAGE.
- VERIFY STATIC SWITCH IS IN THE BYPASS TO LOAD POSITION AND TRANSFER REMOTE MANUAL BYPASS SWITCH TO THE NORMAL OPERATION POSITION.
- PRESS INVERTER TO LOAD PUSHBUTTON.

SHUT-DOWN PROCEDURE

- PRESS BYPASS TO LOAD PUSHBUTTON.
- TRANSFER REMOTE MANUAL BYPASS SWITCH TO THE BYPASS TO LOAD POSITION.
- TURN OFF INVERTER BY TRANSFERRING THE INVERTER ENABLE SWITCH TO THE OFF POSITION.
- OPEN DC INPUT BREAKER.
- OPEN INVERTER OUTPUT BREAKER.
- OPEN BYPASS INPUT BREAKER.

P.O. NO. 197086

LICENSED INFORMATION

AMETEK
SOLIDSTATE CONTROLS
875 DEARBORN DRIVE
COLUMBUS, OHIO 43085

2.10
0000

DRAWN BY	DATE	REFERENCE
JD	05-04-21	
APPVD. BY	DATE	TITLE
SK	05-04-21	OUTLINE INVERTER 30KVA/24KW 105-140VDC,120VAC,1ø,60Hz
SIZE	SCALE	
D	1:10	
WIRE NO. AVAIL	DWG. NO. 10- 001001	SH 2 OF 4
		PROJECT NO. 94002357

AMETEK SOLIDSTATE CONTROLS HALF SIZE DRAWING

REV.	DATE	REVISION RECORD	DWN	APP.
A	05-04-21	INITIAL RELEASE	JD	SK

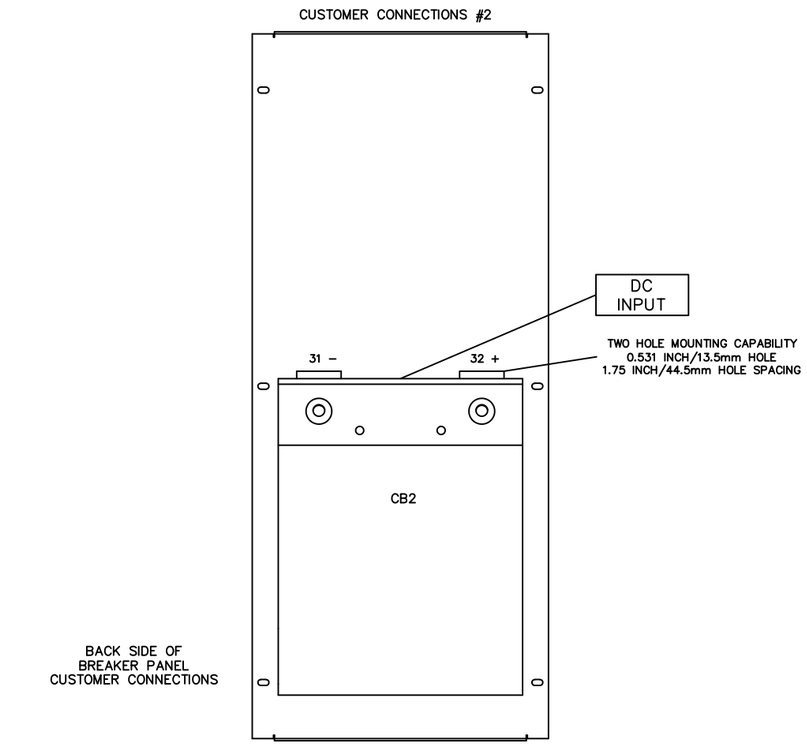

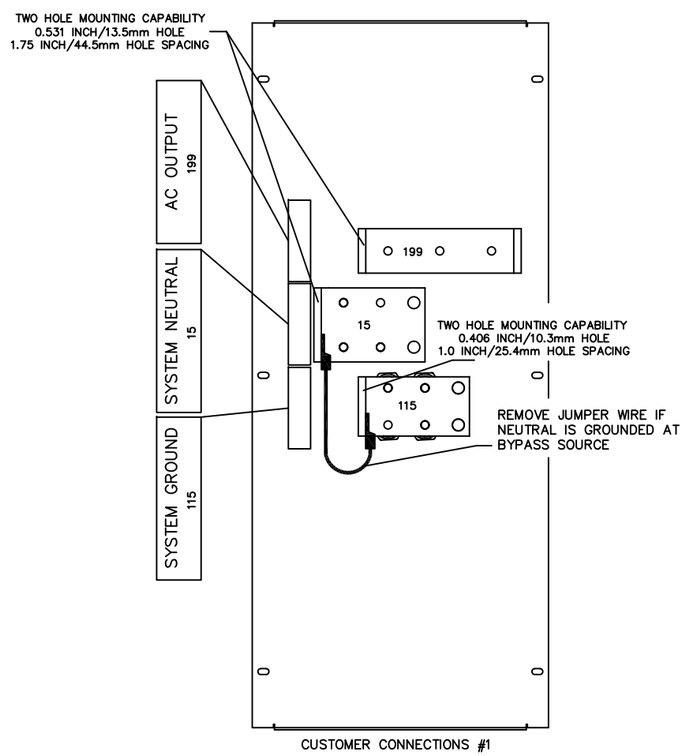

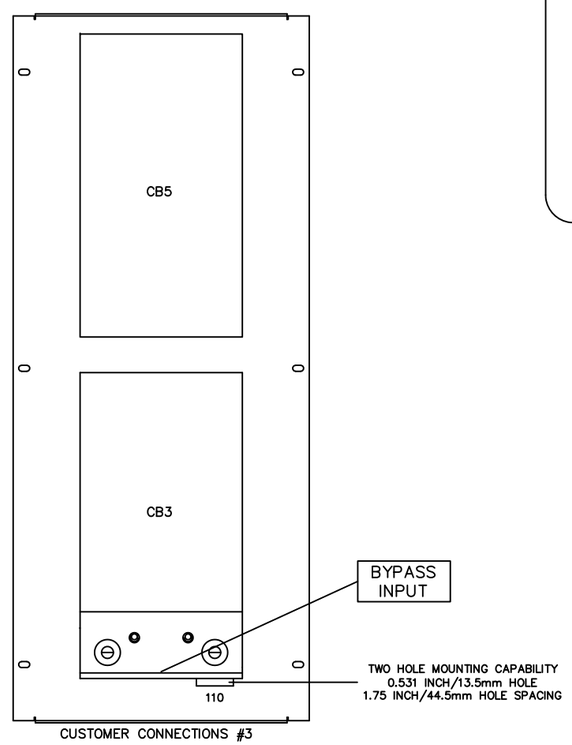

DISPLAY PANEL

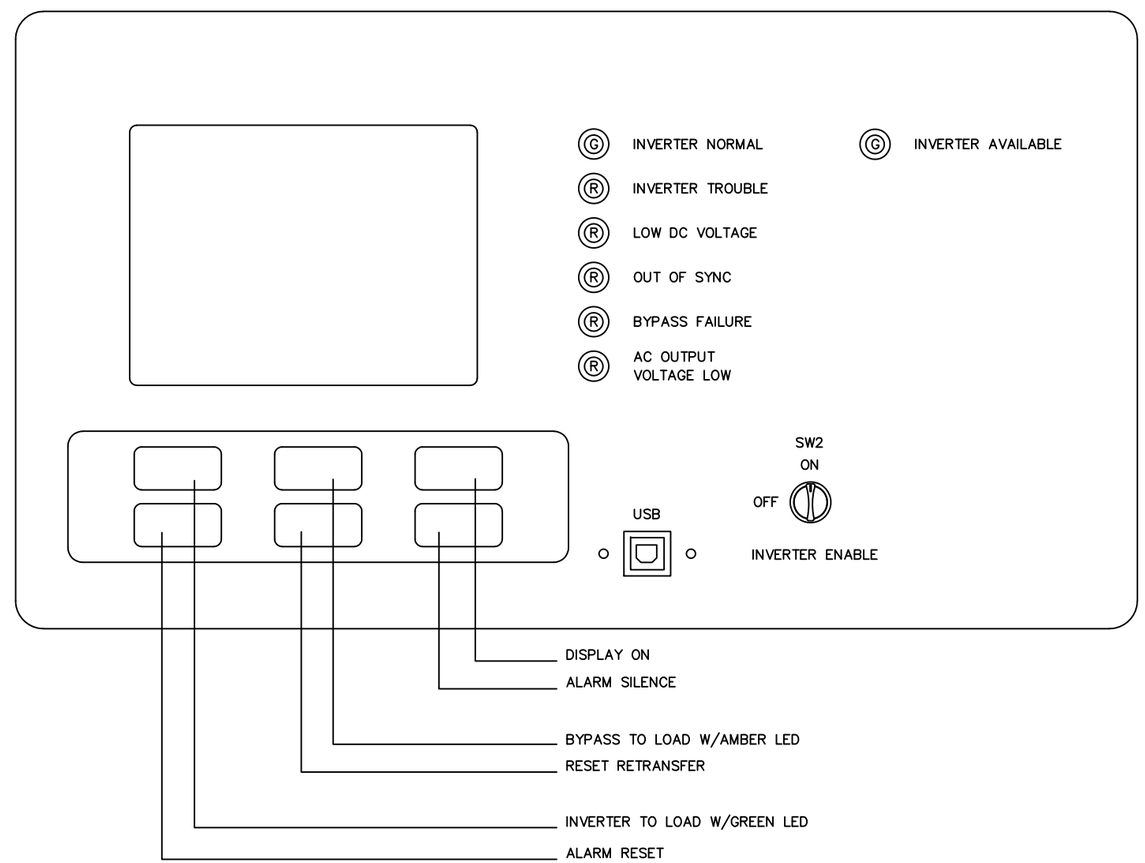

P.O. NO. 197086

LICENSED INFORMATION

AMETEK
SOLIDSTATE CONTROLS
875 DEARBORN DRIVE
COLUMBUS, OHIO 43085

2.10
0000

DRAWN BY	DATE	REFERENCE
JD	05-04-21	
APPVD. BY SK	DATE 05-04-21	TITLE OUTLINE INVERTER 30KVA/24KW 105-140VDC,120VAC,1ø,60Hz
SIZE D	SCALE 1:10	
WIRE NO. AVAIL	DWG. NO. 10- 001001	SH 3 OF 4 / PROJECT NO. 94002357

AMETEK SOLIDSTATE CONTROLS HALF SIZE DRAWING

REV.	DATE	REVISION RECORD	DWN	APP.
A	05-04-21	INITIAL RELEASE	JD	SK

SYSTEM ALARMS AND INDICATIONS VIA LCD PANEL

BATTERY DISCHARGING
LOW DC VOLTAGE
LOW DC DISCONNECT
DC INPUT BREAKER OPEN
INVERTER FAN FAILURE
INVERTER BRIDGE OVER TEMPERATURE
IGBT DE-SATURATION
OVERLOAD SHUTDOWN
INVERTER FAILURE
BYPASS TO LOAD
IN SYNC
STATIC SWITCH FAN FAILURE
STATIC SWITCH BRIDGE OVER TEMPERATURE
STATIC SWITCH SCR FAILURE
RETRANSFER BLOCKED
BYPASS FAILURE
DC POWER SOURCE FAILURE
PCB17 POWER SUPPLY FAILURE
PCB18 POWER SUPPLY FAILURE
PCB19 RELAY COMMUNICATION FAILURE
INVERTER/STATIC SWITCH LOSS OF COMMUNICATIONS
INVERTER/STATIC SWITCH POWER SUPPLY FAULT
OUT OF SYNC
AC OUTPUT VOLTAGE LOW

SYSTEM MEASUREMENTS VIA LCD PANEL

DC VOLTAGE
DC CURRENT
AC OUTPUT VOLTAGE
AC OUTPUT CURRENT
AC OUTPUT FREQUENCY
SYSTEM TOTAL OPERATION TIME
TOTAL OPERATION TIME ON INVERTER
TOTAL OPERATION TIME ON BYPASS
CABINET TEMPERATURE
BYPASS VOLTAGE METERING

P.O. NO. 197086

LICENSED INFORMATION

AMETEK
SOLIDSTATE CONTROLS
875 DEARBORN DRIVE
COLUMBUS, OHIO 43085

2.10
0000

AMETEK SOLIDSTATE CONTROLS HALF SIZE DRAWING

DRAWN BY	DATE	REFERENCE
JD	05-04-21	
APPVD. BY SK	DATE 05-04-21	TITLE OUTLINE INVERTER 30KVA/24KW 105-140VDC,120VAC,1ø,60Hz
SIZE D	SCALE 1:10	
WIRE NO. AVAIL	DWG. NO. 10- 001001	SH 4 OF 4 / PROJECT NO. 94002357

REV.	DATE	REVISION RECORD	DWN	APP.
A	05-04-21	INITIAL RELEASE	JD	SK

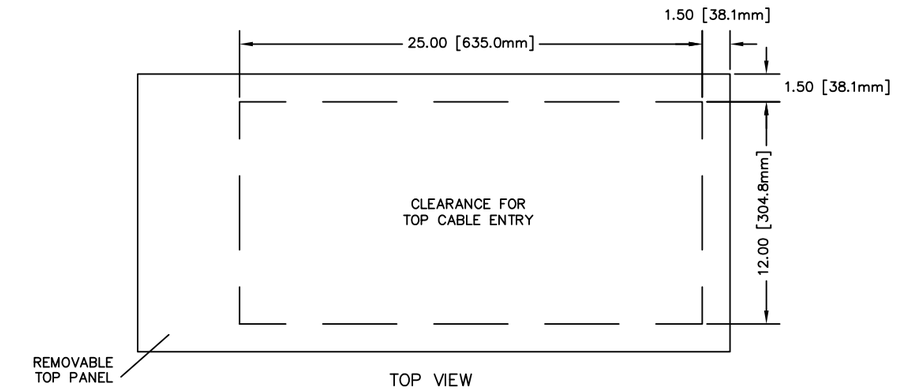

TOP VIEW

NOMINAL RATINGS
120VAC
SINGLE PHASE, 2 WIRE+GND
333 AMPS

BLOCK DIAGRAM

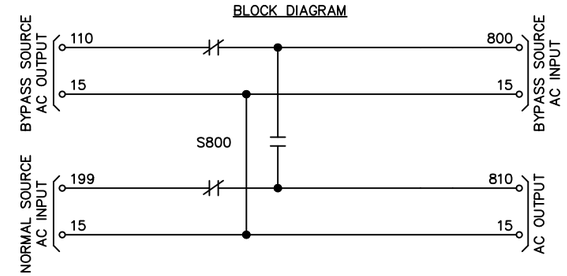

USER INTERFACE PANEL

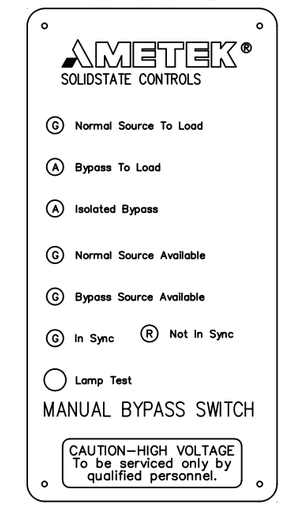

INDICATOR COLOR G – GREEN
R – RED
A – AMBER

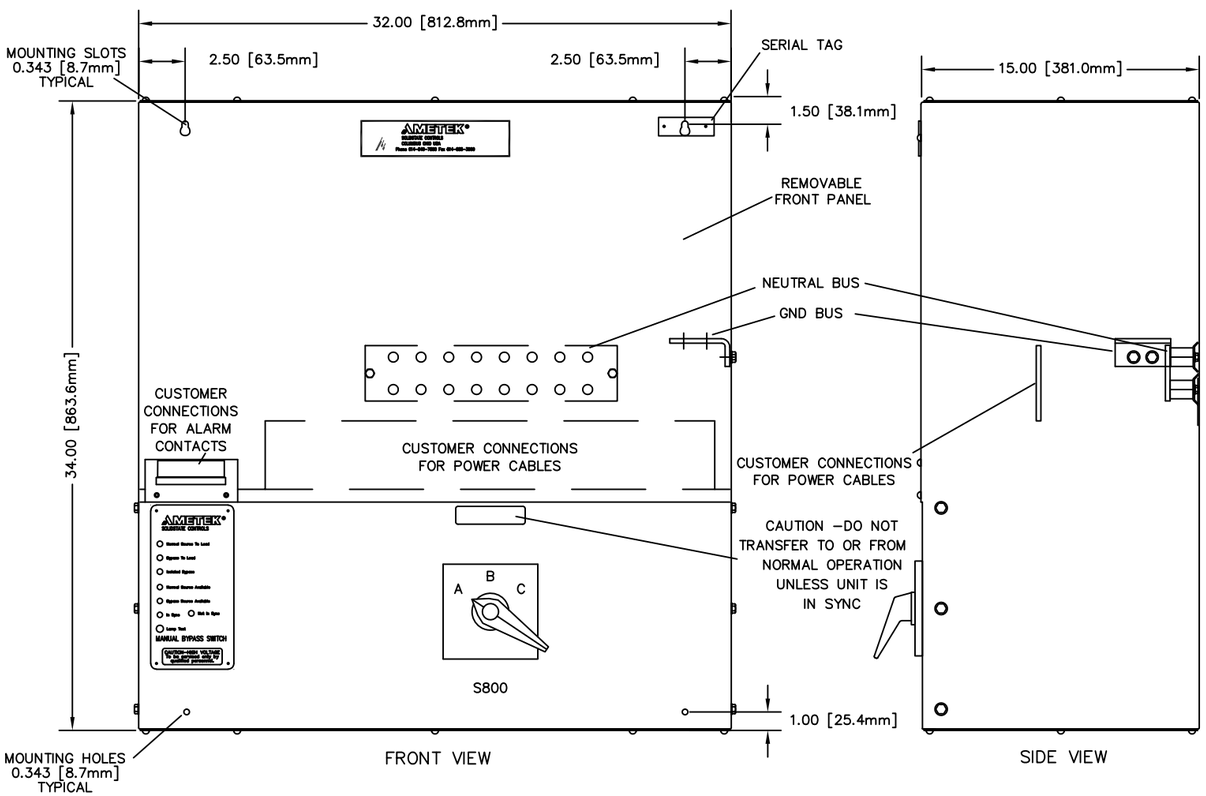

FRONT VIEW

SIDE VIEW

CUSTOMER CONNECTIONS

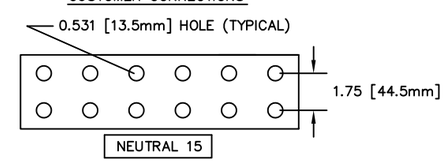

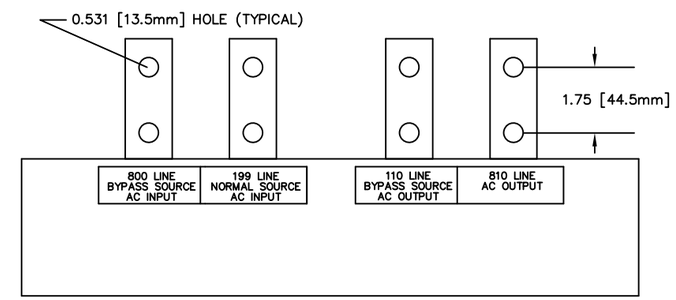

CONNECTIONS FOR POWER CABLES (NOT TO SCALE)

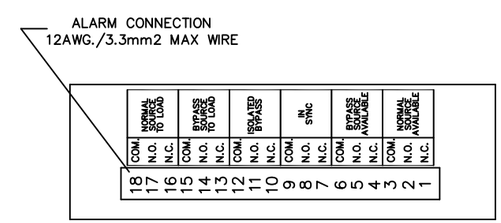

CONNECTIONS FOR ALARM CONTACTS (NOT TO SCALE)

FRONT PANEL IDENTIFICATION

S800	MANUAL BYPASS SWITCH	SWITCH
	(POSITION A) – NORMAL OPERATION	
	(POSITION B) – BYPASS TO LOAD	
	(POSITION C) – ISOLATED BYPASS	

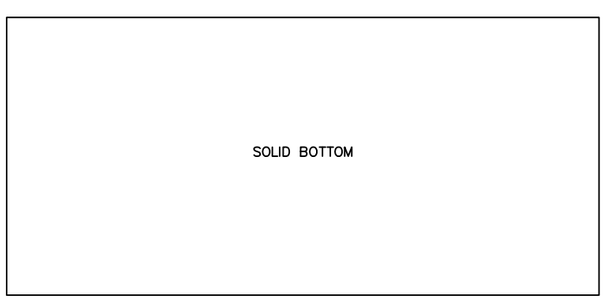

BOTTOM VIEW

40 KVA MBS

MODEL NO. RS400MBC–12
APPROX WT. 150 LBS./68kgs.

NOTES

- CLEARANCE AREA PROVIDED FOR TOP CABLE ENTRY.
- DIMENSIONS AND WEIGHTS ARE SHOWN IN ENGLISH AND METRIC.
- ALL CABINET DIMENSIONS ARE +/– 0.125 (INCH) [3.18mm] TOLERANCE.
- SWITCH PROVIDED WITH PADLOCK DEVICE.

P.O. NO. 197086

LICENSED INFORMATION

AMETEK
SOLIDSTATE CONTROLS
875 DEARBORN DRIVE
COLUMBUS, OHIO 43085

This Drawing Generated by UPS CAD from Solidstate Controls, Inc. 2.02 0000

HALF SIZE DRAWING

DRAWN BY	DATE	REFERENCE
JD	05-04-21	
APPVD. BY	DATE	TITLE
SK	05-04-21	OUTLINE REMOTE MANUAL BYPASS SWITCH 40KVA,1ø,120VAC,50/60HZ
SIZE	SCALE	
D	1:4	
WIRE NO. AVAIL	DWG. NO. 10–002001	SH 1 OF 1 / PROJECT NO. 94002357

REV.	DATE	REVISION RECORD	DWN	APP.
A	05-04-21	INITIAL RELEASE	JD	SK
B	06-08-21	CHANGES PER APPROVAL.	JD	SK

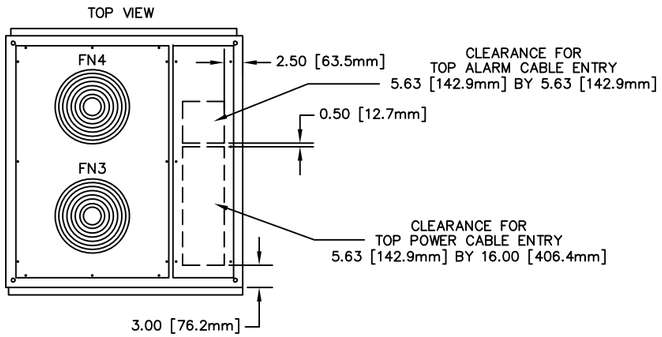

FRONT PANEL IDENTIFICATION		
CB1	AC INPUT	CIRCUIT BREAKER
CB2	CHARGER OUTPUT	CIRCUIT BREAKER

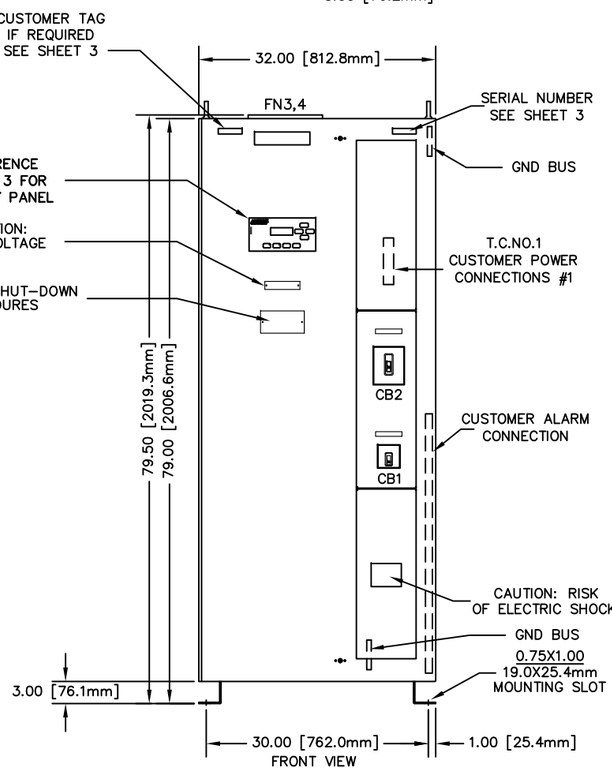

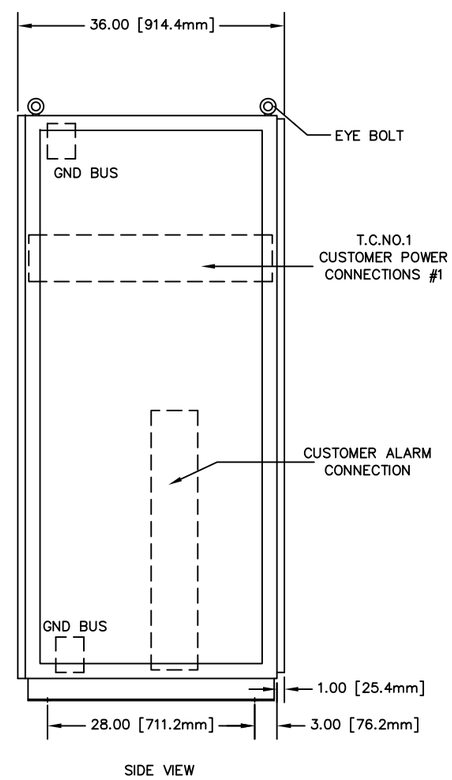

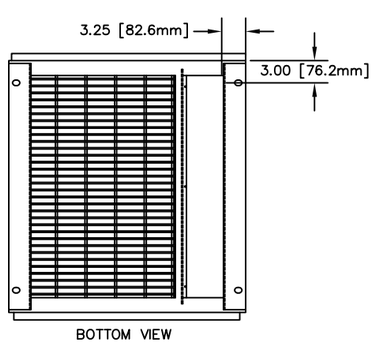

ALLOW APPROXIMATELY 0.500 INCH [12.7mm]
IN ADDITION TO CABINET DEPTH FOR PANEL CONTROLS.

NOTES

- DIMENSIONS AND WEIGHTS ARE SHOWN IN ENGLISH UNITS [METRIC].
- ALL CABINET DIMENSIONS ARE +/- 0.125 (INCH)/3.18mm TOLERANCE.
- PADLOCK DEVICE FOR ALL BREAKERS SUPPLIED.
- CABINET LIFTING EYE BOLTS SUPPLIED.

12 PULSE
320 AMP DCR BATTERY CHARGER

MODEL NO. DCR-120-0320-480-3-60-12-100-B
APPROX WT. 1320 LBS./600kgs.
HEAT LOSS 8363 BTU/HR.

P.O. NO. 197086

LICENSED INFORMATION

AMETEK
SOLIDSTATE CONTROLS
875 DEARBORN DRIVE
COLUMBUS, OHIO 43085

3.03
0000

DRAWN BY	DATE	REFERENCE
JD	05-04-21	
APPVD. BY	DATE	TITLE
SK	05-04-21	OUTLINE 320AMP DCR BATTERY CHARGER 480VAC, 60HZ. 120VDC
SIZE	SCALE	
D	1:10	
WIRE NO. AVAIL	DWG. NO. 10-003001	SH 1 OF 4 / PROJECT NO. 94002357

AMETEK SOLIDSTATE CONTROLS HALF SIZE DRAWING

REV.	DATE	REVISION RECORD	DWN	APP.
A	05-04-21	INITIAL RELEASE	JD	SK
B	06-08-21	CHANGES PER APPROVAL.	JD	SK

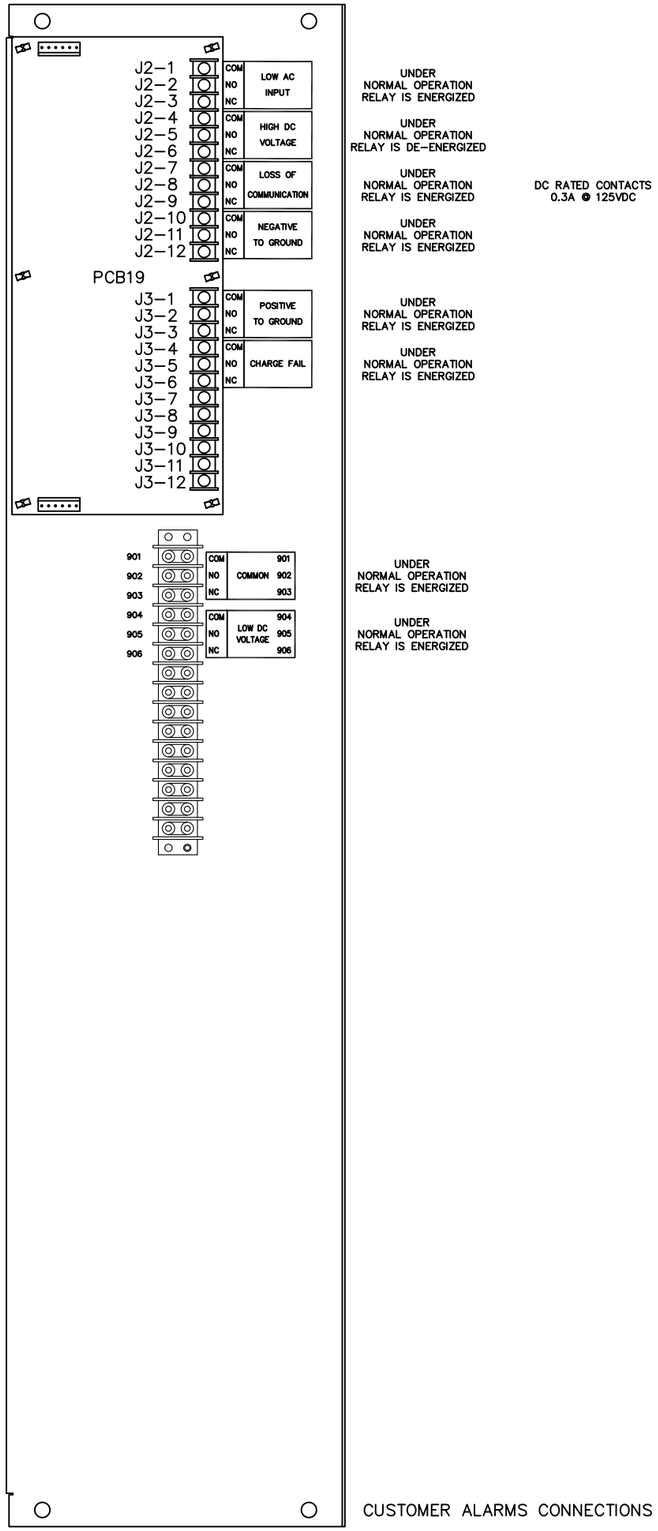

CUSTOMER ALARMS CONNECTIONS

BLOCK DIAGRAM

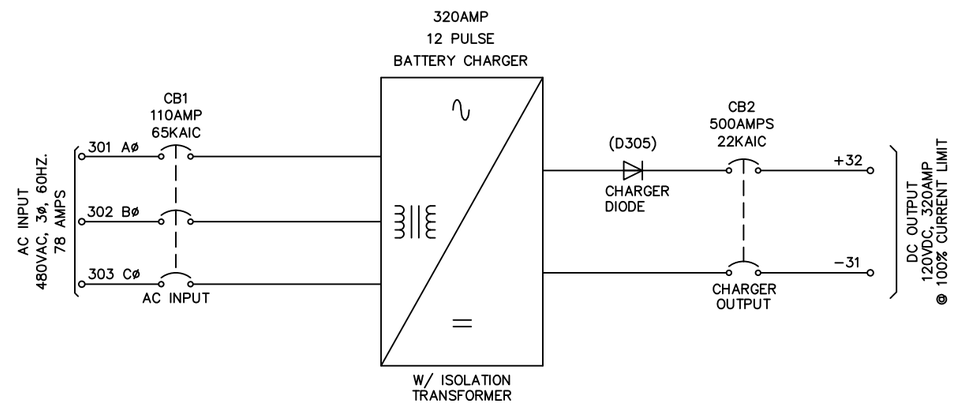

START-UP PROCEDURE

- CLOSE AC INPUT BREAKER.
- CLOSE CHARGER OUTPUT BREAKER.

SHUT-DOWN PROCEDURE

- OPEN CHARGER OUTPUT BREAKER.
- OPEN AC INPUT BREAKER.

P.O. NO. 197086

LICENSED INFORMATION

AMETEK
SOLIDSTATE CONTROLS
875 DEARBORN DRIVE
COLUMBUS, OHIO 43085

3.03
0000

AMETEK SOLIDSTATE CONTROLS HALF SIZE DRAWING

DRAWN BY	DATE	REFERENCE
JD	05-04-21	
APPVD. BY	DATE	TITLE
SK	05-04-21	OUTLINE 320AMP DCR BATTERY CHARGER 480VAC, 60HZ. 120VDC
SIZE	SCALE	
D	1:10	
WIRE NO. AVAIL	DWG. NO. 10-003001	SH 2 OF 4
		PROJECT NO. 94002357

REV.	DATE	REVISION RECORD	DWN	APP.
A	05-04-21	INITIAL RELEASE	JD	SK
B	06-08-21	CHANGES PER APPROVAL.	JD	SK

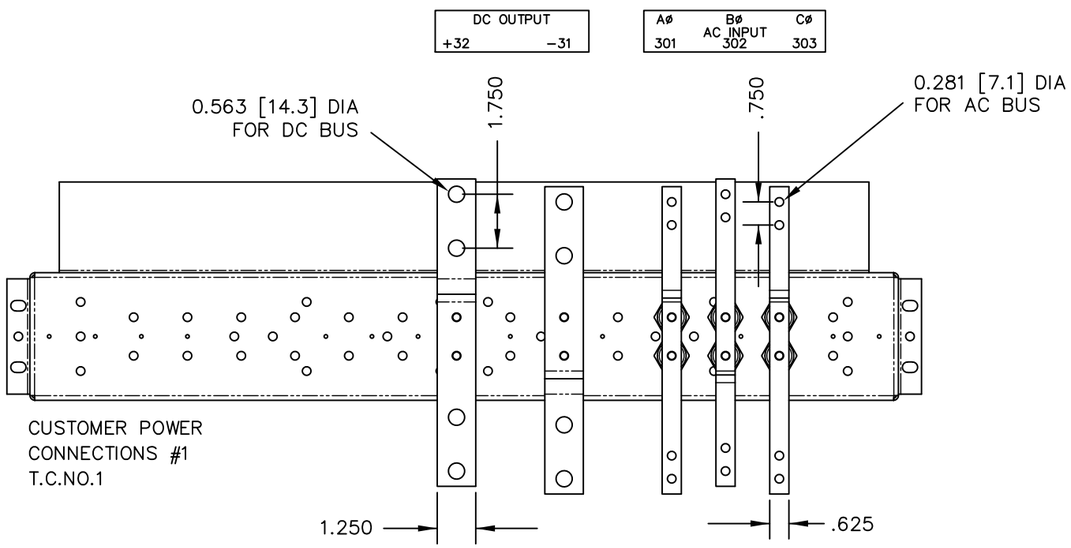

BOTTOM HOLES FOR AMETEK INTERNAL WIRES.

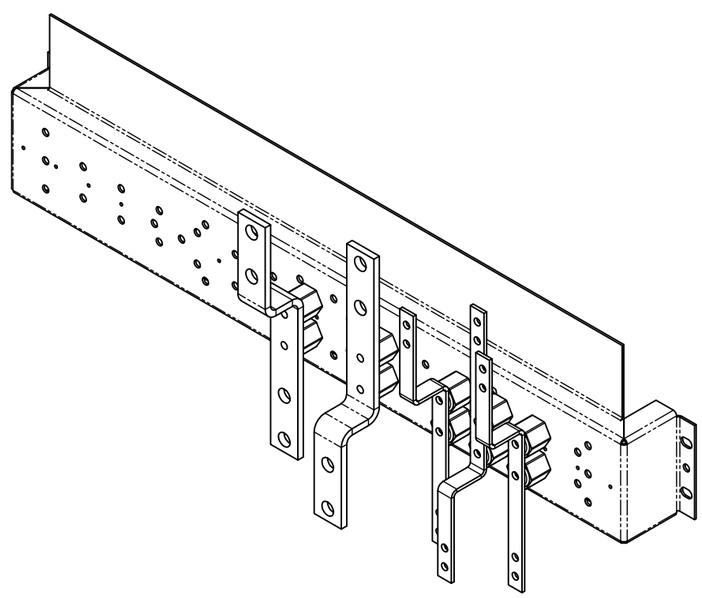

DISPLAY PANEL

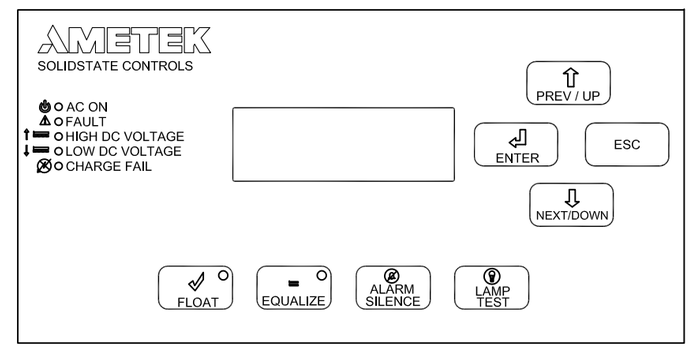

P.O. NO. 197086

LICENSED INFORMATION

AMETEK
SOLIDSTATE CONTROLS
875 DEARBORN DRIVE
COLUMBUS, OHIO 43085

3.03
0000

DRAWN BY	DATE	REFERENCE
JD	05-04-21	
APPVD. BY	DATE	TITLE
SK	05-04-21	OUTLINE
SIZE	SCALE	320AMP DCR BATTERY CHARGER
D	1:10	480VAC, 60HZ. 120VDC
WIRE NO. AVAIL	DWG. NO. 10-003001	SH 3 OF 4 / PROJECT NO. 94002357

AMETEK SOLIDSTATE CONTROLS HALF SIZE DRAWING

REV.	DATE	REVISION RECORD	DWN	APP.
A	05-04-21	INITIAL RELEASE	JD	SK
B	06-08-21	CHANGES PER APPROVAL.	JD	SK

SYSTEM ALARMS AND INDICATIONS VIA LCD PANEL

AC INPUT AVAILABLE
AC INPUT FAILURE
CHARGER BRIDGE OVER TEMPERATURE
CHARGER FAILURE
LOW DC VOLTAGE
HIGH DC VOLTAGE
EQUALIZE
CHARGER LOSS OF COMMUNICATIONS
PCB19 RELAY COMMUNICATION FAILURE (IF SUPPLIED)
PCB20 RELAY COMMUNICATION FAILURE (IF SUPPLIED)
COMMON
LOSS OF COMMUNICATION (RELAY BOARDS IF SUPPLIED)
LAMP TEST
SYSTEM RESET
CHARGER BOARD RESET
SYSTEM OVER TEMPERATURE
CABINET HUMIDITY
CHARGE FAIL
HIGH DC SHUTDOWN
CHARGER AC POWER SUPPLY FAULT
CHARGER DC POWER SUPPLY FAULT
LOW AC INPUT
NEGATIVE TO GROUND
POSITIVE TO GROUND

SYSTEM MEASUREMENTS VIA LCD PANEL

CHARGER OUTPUT VOLTAGE
CHARGER OUTPUT CURRENT

P.O. NO. 197086

LICENSED INFORMATION

AMETEK
SOLIDSTATE CONTROLS
875 DEARBORN DRIVE
COLUMBUS, OHIO 43085

3.03
0000

DRAWN BY	DATE	REFERENCE
JD	05-04-21	
APPVD. BY SK	DATE 05-04-21	TITLE OUTLINE 320AMP DCR BATTERY CHARGER 480VAC, 60HZ. 120VDC
SIZE D	SCALE 1:10	
WIRE NO. AVAIL	DWG. NO. 10-003001	SH 4 OF 4 / PROJECT NO. 94002357

AMETEK SOLIDSTATE CONTROLS HALF SIZE DRAWING

WIRE SIZE:
ALL UNMARKED CONTROL WIRES TO BE 22 AWG. / 0.32mm2
ALL POWER WIRE TO BE 600V MIN.

A–18 AWG. 300V / 0.82mm2	T–18 AWG. 600V / 0.82mm2
C–14 AWG. / 2.08mm2	K–1 AWG. / 42.41mm2
E–10 AWG. / 5.26mm2	L–1/0 AWG. / 53.51mm2
F–8 AWG. / 8.37mm2	M–2/0 AWG. / 67.44mm2
G–6 AWG. / 13.30mm2	N–3/0 AWG. / 85.03mm2
H–4 AWG. / 21.15mm2	P–4/0 AWG. / 107.22mm2
J–2 AWG. / 33.63mm2	R–FIBER OPTIC CABLE

(WIRES MAY BE PARALLELED FOR LARGER POWER REQUIREMENTS)

PCB LEVEL DIAGNOSTIC INDICATORS

TWISTED PAIR
TWISTED PAIR (SHIELDED)
ISOLATED

REV.	DATE	REVISION RECORD	DWN	APP.
A	05–04–21	INITIAL RELEASE	JD	SK

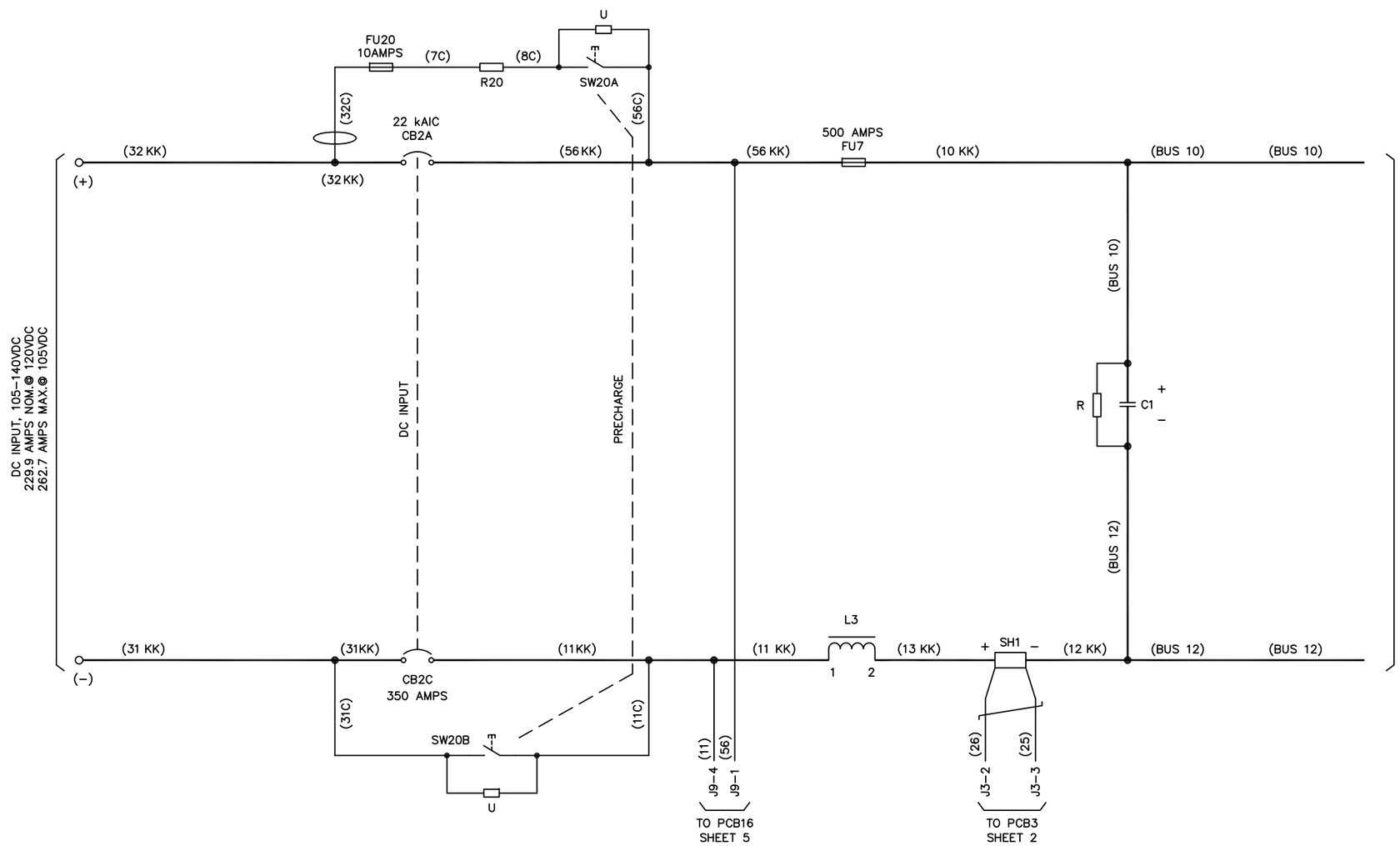

P.O. NO. 197086

LICENSED INFORMATION

AMETEK
SOLIDSTATE CONTROLS
875 DEARBORN DRIVE
COLUMBUS, OHIO 43085

2.10
0000

DRAWN BY JD	DATE 05–04–21	REFERENCE	
APPVD. BY SK	DATE 05–04–21	TITLE	SCHEMATIC 30KVA/24KW INVERTER 105–140 VDC, 120VAC, 60Hz,1ø
SIZE D	SCALE		
WIRE NO. AVAIL 200–210	DWG. NO. 20–001002	SH 1 OF 5	PROJECT NO. 94002357

AMETEK SOLIDSTATE CONTROLS HALF SIZE DRAWING

REV.	DATE	REVISION RECORD	DWN	APP.
A	05-04-21	INITIAL RELEASE	JD	SK

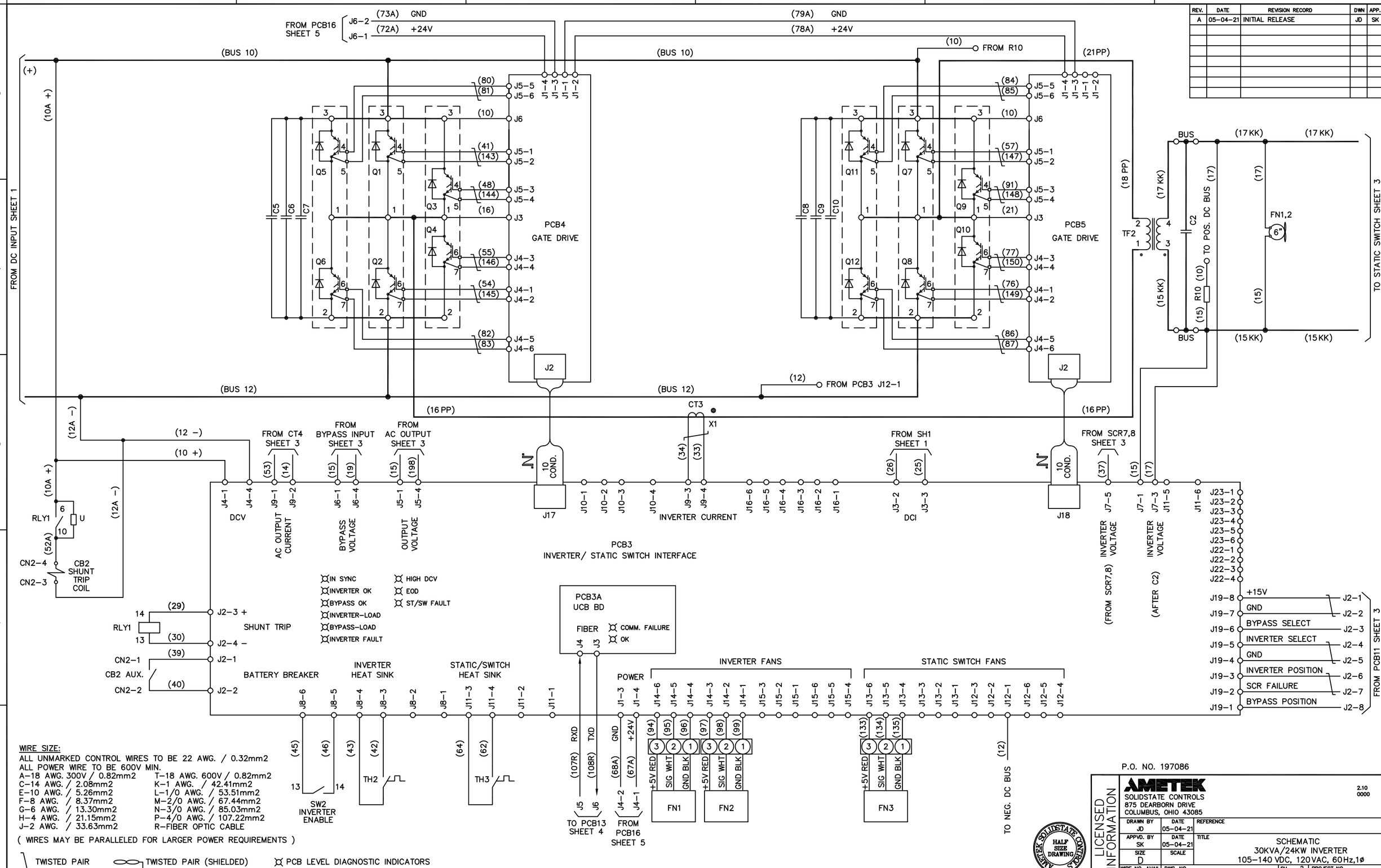

REV.	DATE	REVISION RECORD	DWN	APP.
A	05-04-21	INITIAL RELEASE	JD	SK

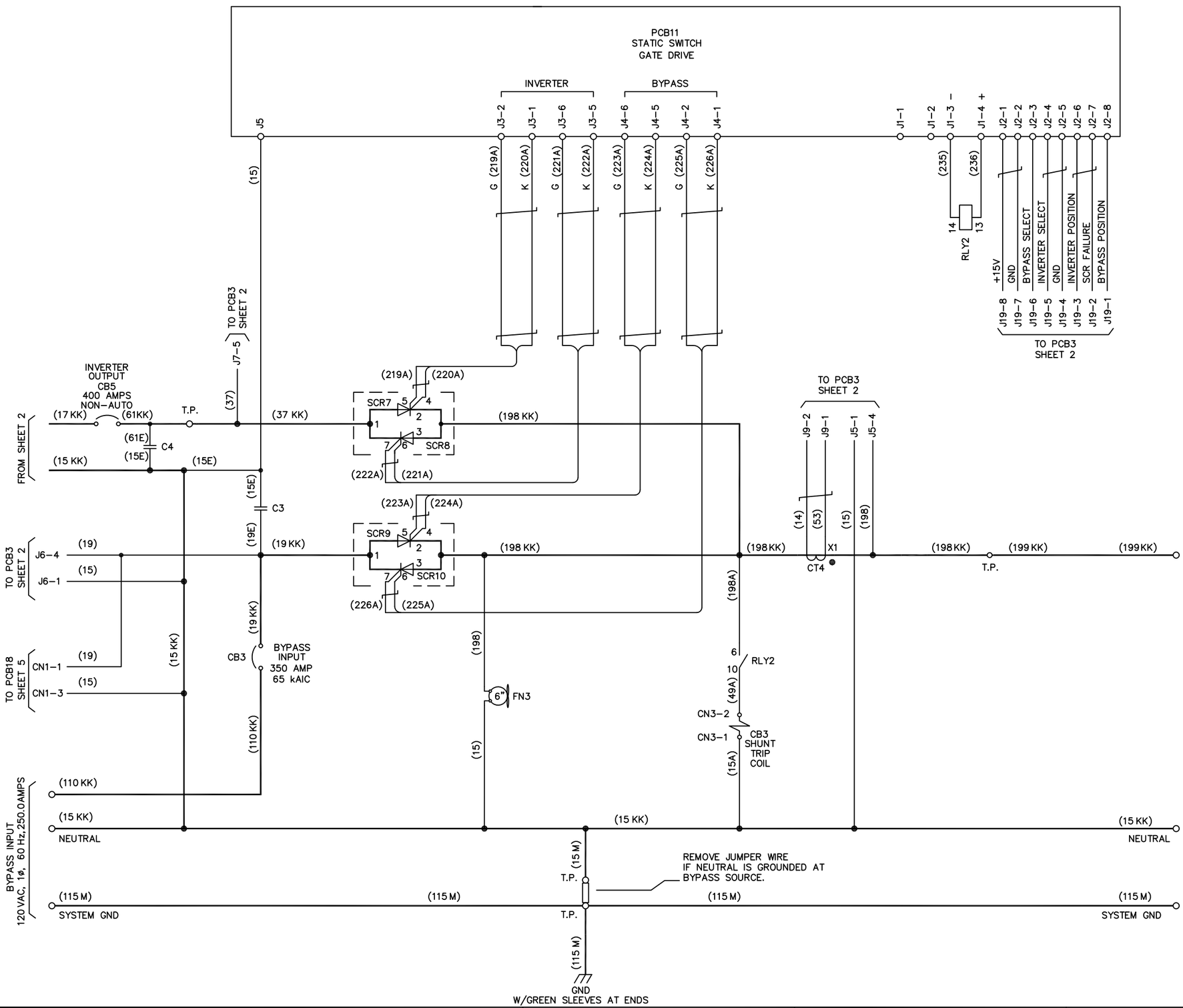

WIRE SIZE:
ALL UNMARKED CONTROL WIRES TO BE 22 AWG. / 0.32mm2
ALL POWER WIRE TO BE 600V MIN.

A-18 AWG. 300V / 0.82mm2	T-18 AWG. 600V / 0.82mm2
C-14 AWG. / 2.08mm2	K-1 AWG. / 42.41mm2
E-10 AWG. / 5.26mm2	L-1/0 AWG. / 53.51mm2
F-8 AWG. / 8.37mm2	M-2/0 AWG. / 67.44mm2
G-6 AWG. / 13.30mm2	N-3/0 AWG. / 85.03mm2
H-4 AWG. / 21.15mm2	P-4/0 AWG. / 107.22mm2
J-2 AWG. / 33.63mm2	

(WIRES MAY BE PARALLELED FOR LARGER POWER REQUIREMENTS)

TWISTED PAIR T.P. - TIE POINT

TWISTED PAIR (SHIELDED)

P.O. NO. 197086

LICENSED INFORMATION

AMETEK
SOLIDSTATE CONTROLS
875 DEARBORN DRIVE
COLUMBUS, OHIO 43085

2.10
0000

DRAWN BY JD	DATE 05-04-21	REFERENCE	
APPVD. BY SK	DATE 05-04-21	TITLE	SCHEMATIC 30KVA/24KW INVERTER 105-140 VDC, 120VAC, 60Hz,1ø
SIZE D	SCALE		
WIRE NO. AVAIL 200-210	DWG. NO. 20-001002	SH 3 OF 5	PROJECT NO. 94002357

AMETEK SOLIDSTATE CONTROLS HALF SIZE DRAWING

REV.	DATE	REVISION RECORD	DWN	APP.
A	05-04-21	INITIAL RELEASE	JD	SK

WIRE SIZE:
ALL UNMARKED CONTROL WIRES TO BE 22 AWG. / 0.32mm2

A-18 AWG. 300V / 0.82mm2
C-14 AWG. / 2.08mm2
T-18 AWG. 600V / 0.82mm2
R-FIBER OPTIC CABLE

TWISTED PAIR
TWISTED PAIR (SHIELDED)
PCB LEVEL DIAGNOSTIC INDICATORS

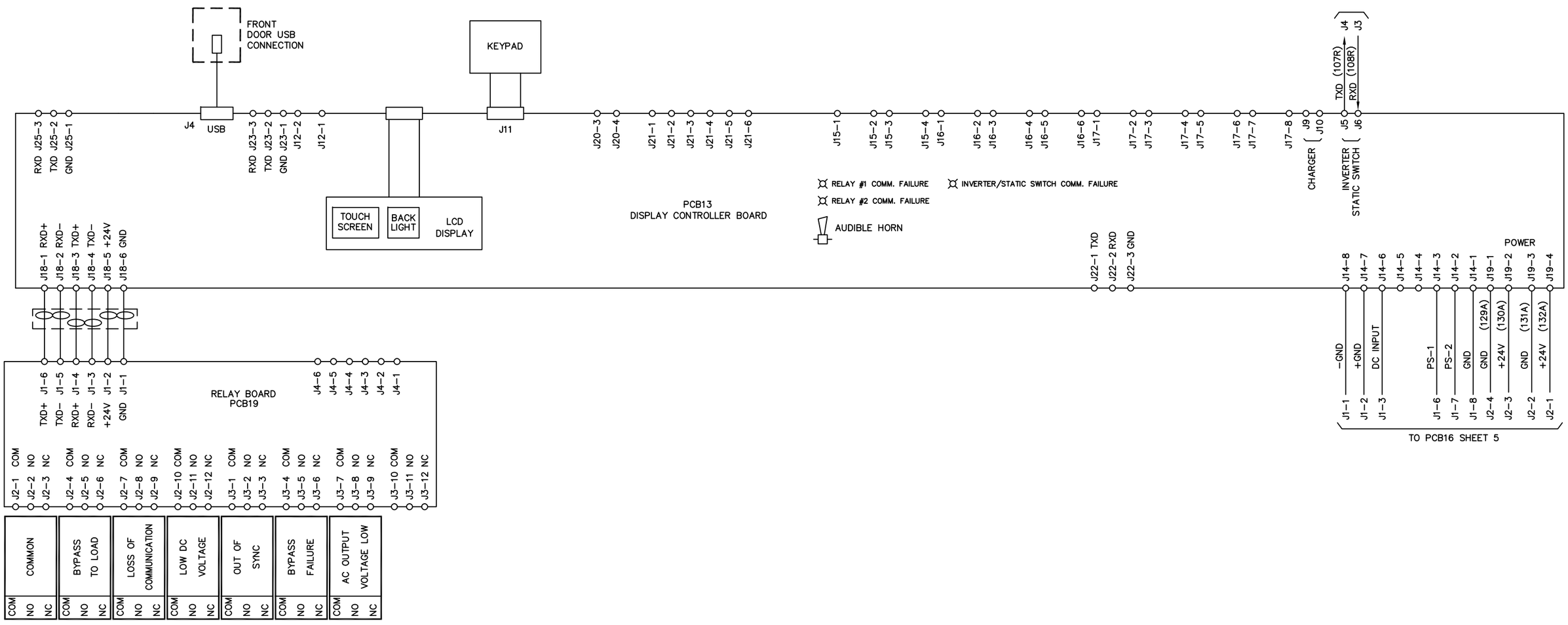

P.O. NO. 197086

LICENSED INFORMATION

AMETEK
SOLIDSTATE CONTROLS
875 DEARBORN DRIVE
COLUMBUS, OHIO 43085

2.10
0000

DRAWN BY	DATE	REFERENCE
JD	05-04-21	
APPVD. BY	DATE	TITLE
SK	05-04-21	SCHEMATIC 30KVA/24KW INVERTER 105-140 VDC, 120VAC, 60Hz,1ø
SIZE	SCALE	
D		
WIRE NO. AVAIL	DWG. NO.	SH 4 OF 5
200-210	20-001002	PROJECT NO. 94002357

AMETEK SOLIDSTATE CONTROLS HALF SIZE DRAWING

REV.	DATE	REVISION RECORD	DWN	APP.
A	05-04-21	INITIAL RELEASE	JD	SK

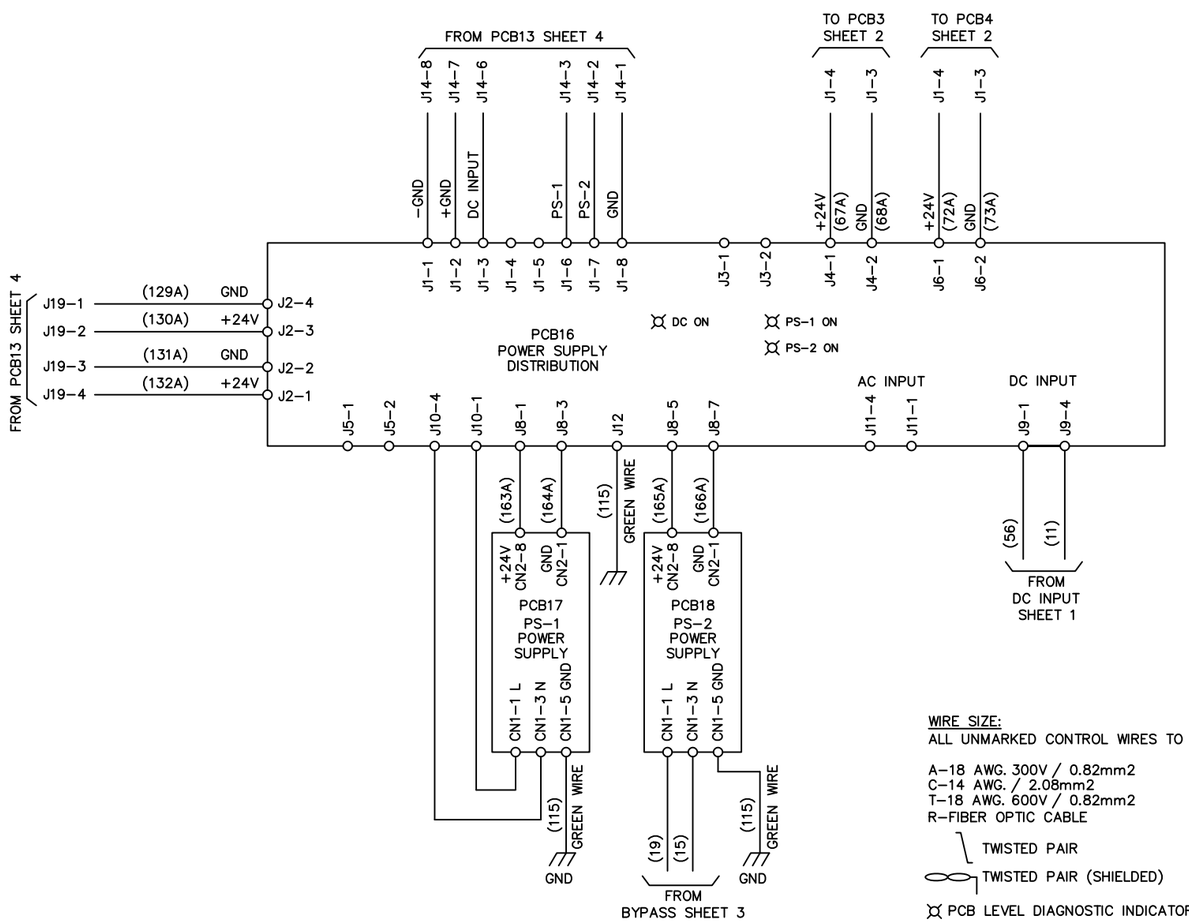

WIRE SIZE:
ALL UNMARKED CONTROL WIRES TO BE 22 AWG. / 0.32mm2

A-18 AWG. 300V / 0.82mm2
C-14 AWG. / 2.08mm2
T-18 AWG. 600V / 0.82mm2
R-FIBER OPTIC CABLE

TWISTED PAIR
TWISTED PAIR (SHIELDED)
PCB LEVEL DIAGNOSTIC INDICATORS

P.O. NO. 197086

LICENSED INFORMATION

AMETEK
SOLIDSTATE CONTROLS
875 DEARBORN DRIVE
COLUMBUS, OHIO 43085

2.10
0000

AMETEK SOLIDSTATE CONTROLS HALF SIZE DRAWING

DRAWN BY	DATE	REFERENCE
JD	05-04-21	
APPVD. BY	DATE	TITLE
SK	05-04-21	SCHEMATIC 30KVA/24KW INVERTER 105-140 VDC, 120VAC, 60Hz,1ø
SIZE	SCALE	
D		
WIRE NO. AVAIL	DWG. NO.	SH 5 OF 5	PROJECT NO.
200-210	20-001002		94002357

REV.	DATE	REVISION RECORD	DWN	APP.
A	05-04-21	INITIAL RELEASE.	JD	SK

WIRE SIZE:
ALL UNMARKED CONTROL WIRES TO BE 22 AWG. / 0.32mm2
ALL POWER WIRE TO BE 600V MIN.

A-18 AWG. 300V / 0.82mm2	T-18 AWG. 600V / 0.82mm2
C-14 AWG. / 2.08mm2	K-1 AWG. / 42.41mm2
E-10 AWG. / 5.26mm2	L-1/0 AWG. / 53.51mm2
F-8 AWG. / 8.37mm2	M-2/0 AWG. / 67.44mm2
G-6 AWG. / 13.30mm2	N-3/0 AWG. / 85.03mm2
H-4 AWG. / 21.15mm2	P-4/0 AWG. / 107.22mm2
J-2 AWG. / 33.63mm2	

(WIRES MAY BE PARALLELED FOR LARGER POWER REQUIREMENTS)

PCB LEVEL DIAGNOSTIC INDICATORS

— ISOLATED
— ISOLATED, TWISTED PAIR
— TIE POINT
— TWISTED PAIR

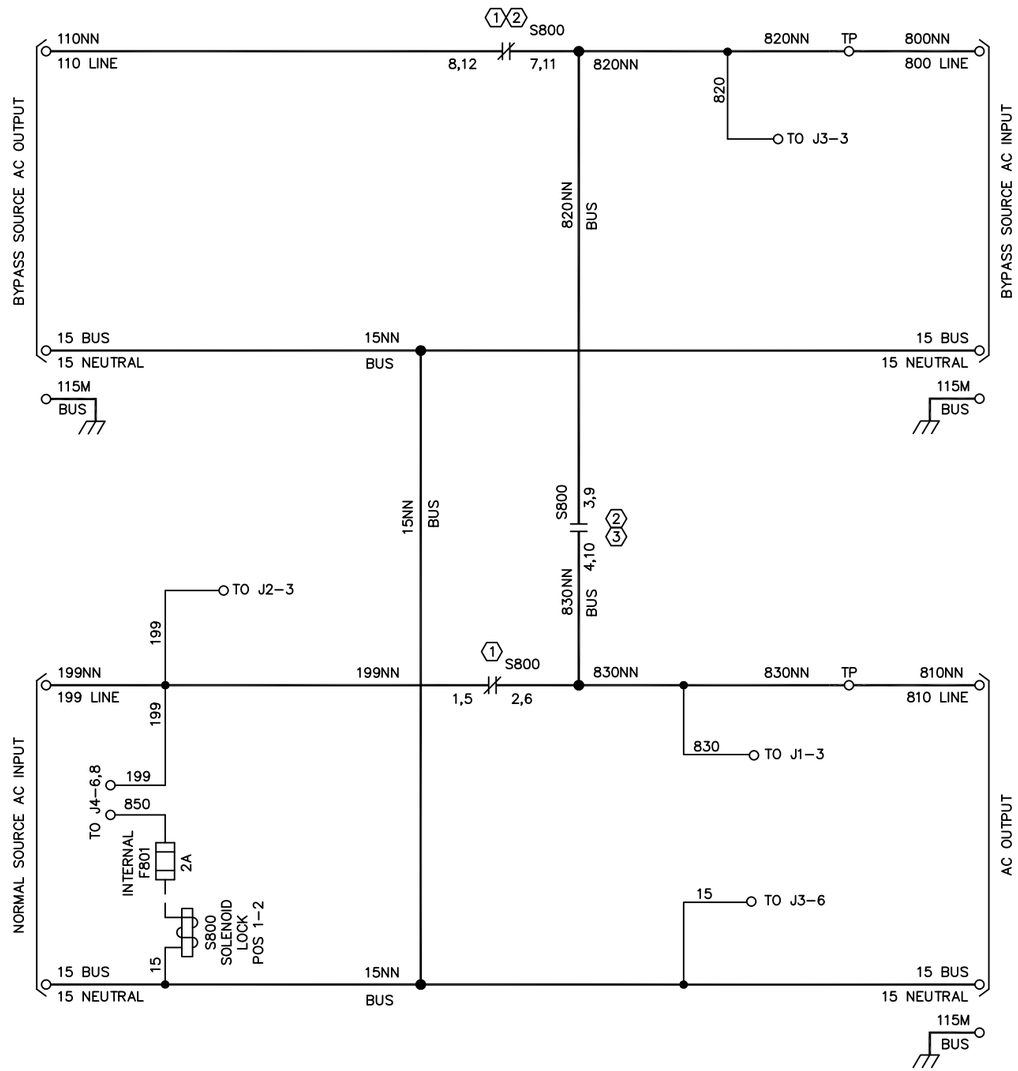

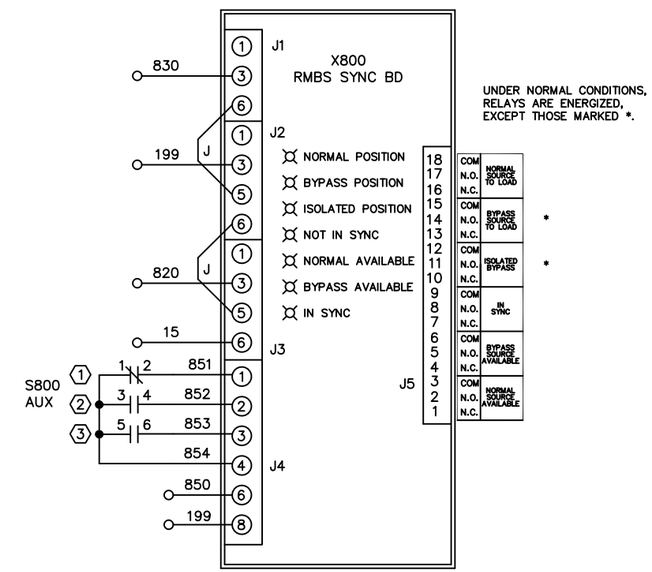

UNDER NORMAL CONDITIONS, RELAYS ARE ENERGIZED, EXCEPT THOSE MARKED *.

NOMINAL RATINGS
120VAC
SINGLE PHASE, 2 WIRE+GND
333 AMPS

S800
BYPASS TO LOAD
NORMAL OPERATION (1) (2) ISOLATED BYPASS (3)

REMOTE MANUAL BYPASS SWITCH
— DENOTES WHICH POSITION SWITCH CONTACTS ARE CLOSED

.P.O. NO. 197086

LICENSED INFORMATION

AMETEK
SOLIDSTATE CONTROLS
875 DEARBORN DRIVE
COLUMBUS, OHIO 43085

This Drawing Generated by UPS CAD™ from Solidstate Controls, Inc.
2.02
0000

HALF SIZE DRAWING

DRAWN BY JD	DATE 05-04-21	REFERENCE	
APPVD. BY SK	DATE 05-04-21	TITLE	SCHEMATIC REMOTE MANUAL BYPASS SWITCH 40 KVA,1ø,120VAC,50/60HZ
SIZE D	SCALE 1:1		
WIRE NO. AVAIL	DWG. NO. 20-002002	SH 1 OF 1	PROJECT NO. 94002357

REV.	DATE	REVISION RECORD	DWN	APP.
A	05-04-21	INITIAL RELEASE	JD	SK
B	06-08-21	CHANGES PER APPROVAL.	JD	SK

WIRE SIZE:
ALL UNMARKED CONTROL WIRES TO BE 22 AWG. / 0.32mm2
ALL POWER WIRE TO BE 600V MIN.

A-18 AWG. 300V / 0.82mm2	T-18 AWG. 600V / 0.82mm2
C-14 AWG. / 2.08mm2	K-1 AWG. / 42.41mm2
E-10 AWG. / 5.26mm2	L-1/0 AWG. / 53.51mm2
F-8 AWG. / 8.37mm2	M-2/0 AWG. / 67.44mm2
G-6 AWG. / 13.30mm2	N-3/0 AWG. / 85.03mm2
H-4 AWG. / 21.15mm2	P-4/0 AWG. / 107.22mm2
J-2 AWG. / 33.63mm2	R-FIBER OPTIC CABLE

(WIRES MAY BE PARALLELED FOR LARGER POWER REQUIREMENTS)

TWISTED PAIR

TWISTED PAIR (SHIELDED)

PCB LEVEL DIAGNOSTIC INDICATORS

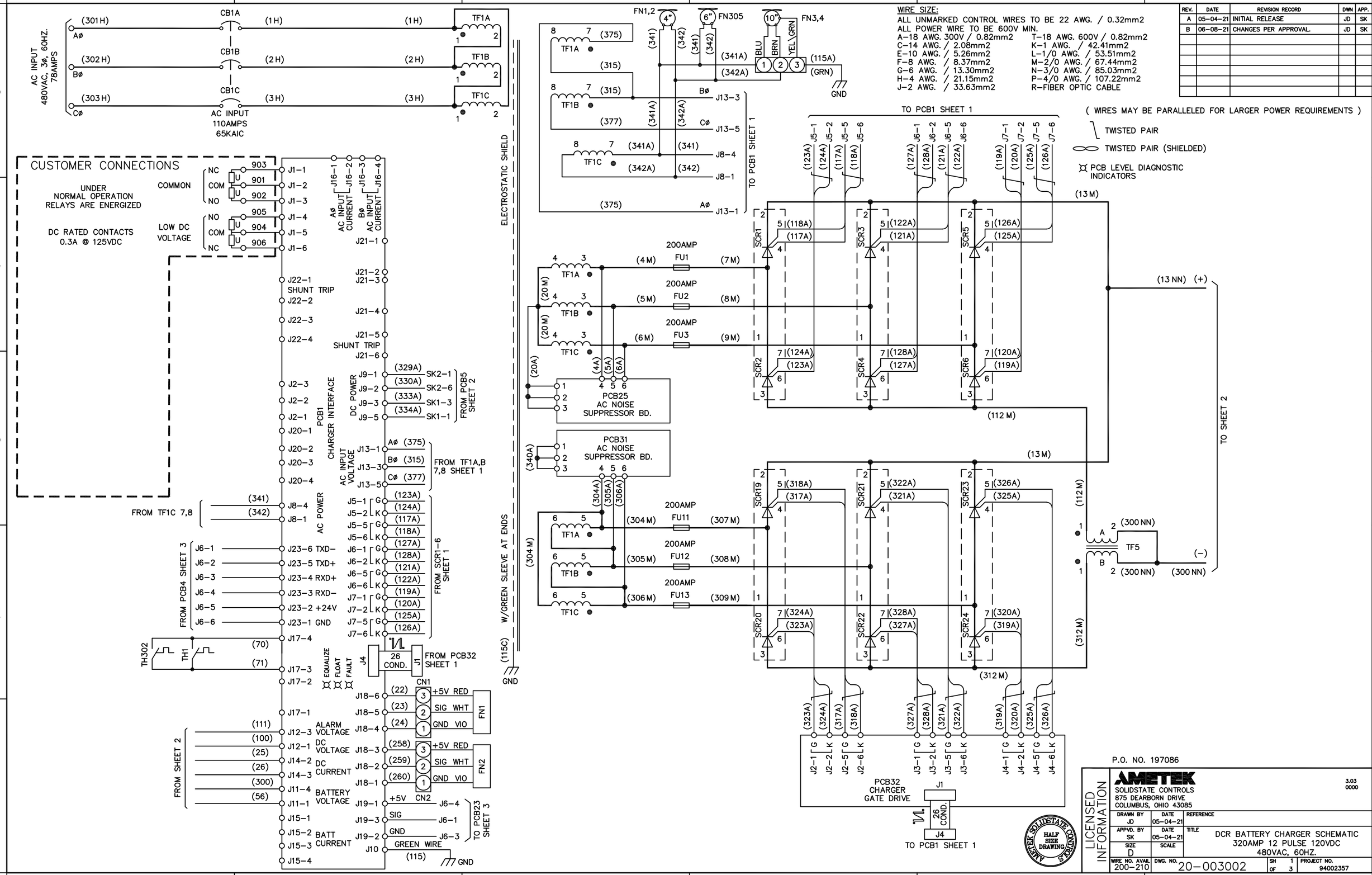

P.O. NO. 197086

LICENSED INFORMATION

AMETEK SOLIDSTATE CONTROLS
875 DEARBORN DRIVE
COLUMBUS, OHIO 43085

3.03
0000

DRAWN BY	DATE	REFERENCE
JD	05-04-21	
APPVD. BY	DATE	TITLE
SK	05-04-21	DCR BATTERY CHARGER SCHEMATIC 320AMP 12 PULSE 120VDC 480VAC, 60HZ.
SIZE	SCALE	
D		
WIRE NO. AVAIL	DWG. NO.	SH 1 OF 3 / PROJECT NO.
200-210	20-003002	94002357

AMETEK SOLIDSTATE CONTROLS HALF SIZE DRAWING

REV.	DATE	REVISION RECORD	DWN	APP.
A	05-04-21	INITIAL RELEASE	JD	SK
B	06-08-21	CHANGES PER APPROVAL.	JD	SK

NOTE: WHEN OPT29 IS
REQUIRED SUBSTITUTE (NN)- WIRE
WITH (MMM)- WELDING CABLE
ON FLOATING SIDE OF HEATSINK.

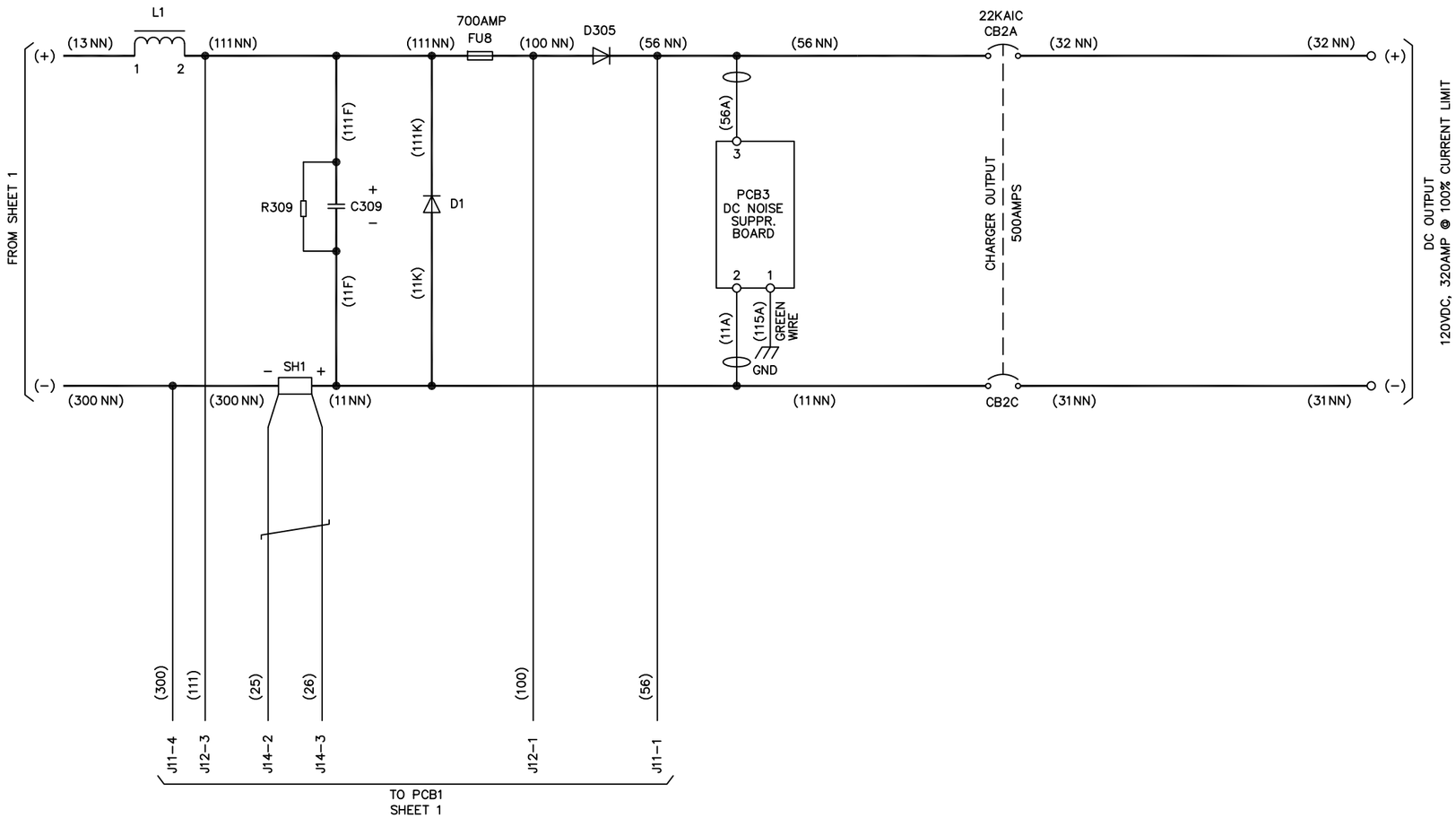

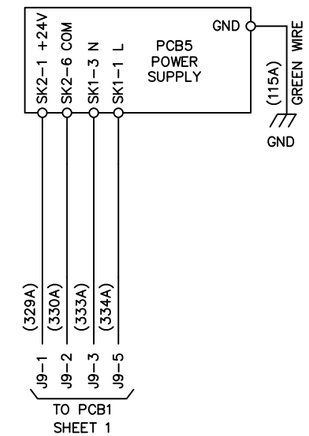

WIRE SIZE:
ALL UNMARKED CONTROL WIRES TO BE 22 AWG. / 0.32mm2
ALL POWER WIRE TO BE 600V MIN.

A-18 AWG. 300V / 0.82mm2	T-18 AWG. 600V / 0.82mm2
C-14 AWG. / 2.08mm2	K-1 AWG. / 42.41mm2
E-10 AWG. / 5.26mm2	L-1/0 AWG. / 53.51mm2
F-8 AWG. / 8.37mm2	M-2/0 AWG. / 67.44mm2
G-6 AWG. / 13.30mm2	N-3/0 AWG. / 85.03mm2
H-4 AWG. / 21.15mm2	P-4/0 AWG. / 107.22mm2
J-2 AWG. / 33.63mm2	R-FIBER OPTIC CABLE

(WIRES MAY BE PARALLELED FOR LARGER POWER REQUIREMENTS)

ISOLATED
PCB LEVEL DIAGNOSTIC INDICATORS
TWISTED PAIR
TWISTED PAIR (SHIELDED)

P.O. NO. 197086

LICENSED INFORMATION

AMETEK
SOLIDSTATE CONTROLS
875 DEARBORN DRIVE
COLUMBUS, OHIO 43085

3.03
0000

AMETEK SOLIDSTATE CONTROLS HALF SIZE DRAWING

DRAWN BY JD	DATE 05-04-21	REFERENCE	
APPVD. BY SK	DATE 05-04-21	TITLE DCR BATTERY CHARGER SCHEMATIC 320AMP 12 PULSE 120VDC 480VAC, 60HZ.	
SIZE D	SCALE		
WIRE NO. AVAIL 200-210	DWG. NO. 20-003002	SH 2 OF 3	PROJECT NO. 94002357

REV.	DATE	REVISION RECORD	DWN	APP.
A	05-04-21	INITIAL RELEASE	JD	SK
B	06-08-21	CHANGES PER APPROVAL.	JD	SK

WIRE SIZE:
ALL UNMARKED CONTROL WIRES TO BE 22 AWG. / 0.32mm2
ALL POWER WIRE TO BE 600V MIN.

A-18 AWG. 300V / 0.82mm2	T-18 AWG. 600V / 0.82mm2
C-14 AWG. / 2.08mm2	K-1 AWG. / 42.41mm2
E-10 AWG. / 5.26mm2	L-1/0 AWG. / 53.51mm2
F-8 AWG. / 8.37mm2	M-2/0 AWG. / 67.44mm2
G-6 AWG. / 13.30mm2	N-3/0 AWG. / 85.03mm2
H-4 AWG. / 21.15mm2	P-4/0 AWG. / 107.22mm2
J-2 AWG. / 33.63mm2	R-FIBER OPTIC CABLE

(WIRES MAY BE PARALLELED FOR LARGER POWER REQUIREMENTS)

PCB LEVEL DIAGNOSTIC INDICATORS

TWISTED PAIR

TWISTED PAIR (SHIELDED)

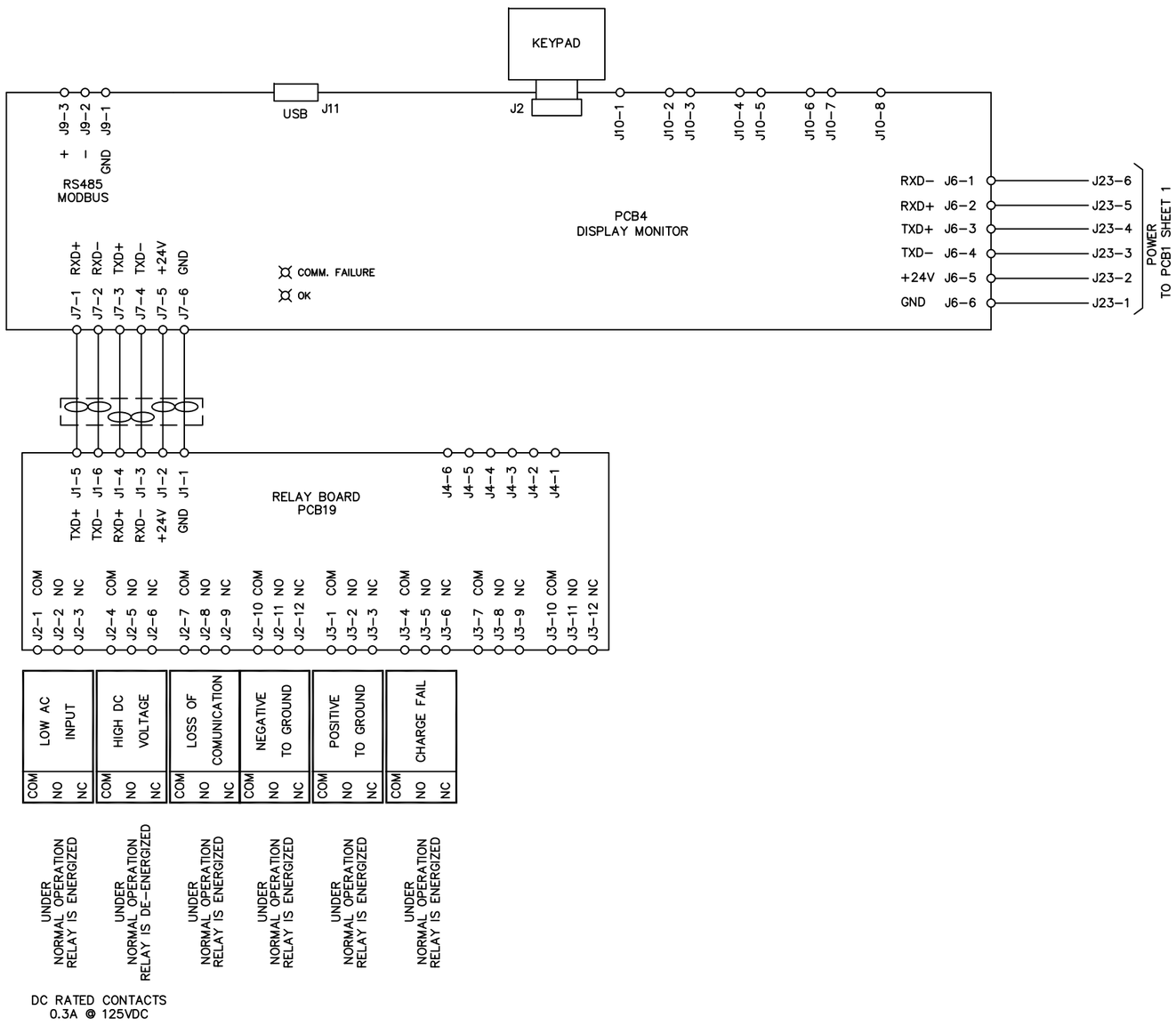

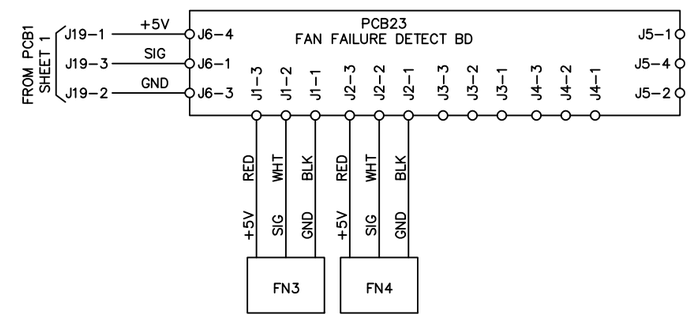

CHARGER CABINET FANS

P.O. NO. 197086

LICENSED INFORMATION

AMETEK
SOLIDSTATE CONTROLS
875 DEARBORN DRIVE
COLUMBUS, OHIO 43085

3.03
0000

DRAWN BY	DATE	REFERENCE
JD	05-04-21	
APPVD. BY SK	DATE 05-04-21	TITLE DCR BATTERY CHARGER SCHEMATIC 320AMP 12 PULSE 120VDC 480VAC, 60HZ.
SIZE D	SCALE	
WIRE NO. AVAIL 200-210	DWG. NO. 20-003002	SH 3 OF 3 / PROJECT NO. 94002357

AMETEK SOLIDSTATE CONTROLS HALF SIZE DRAWING

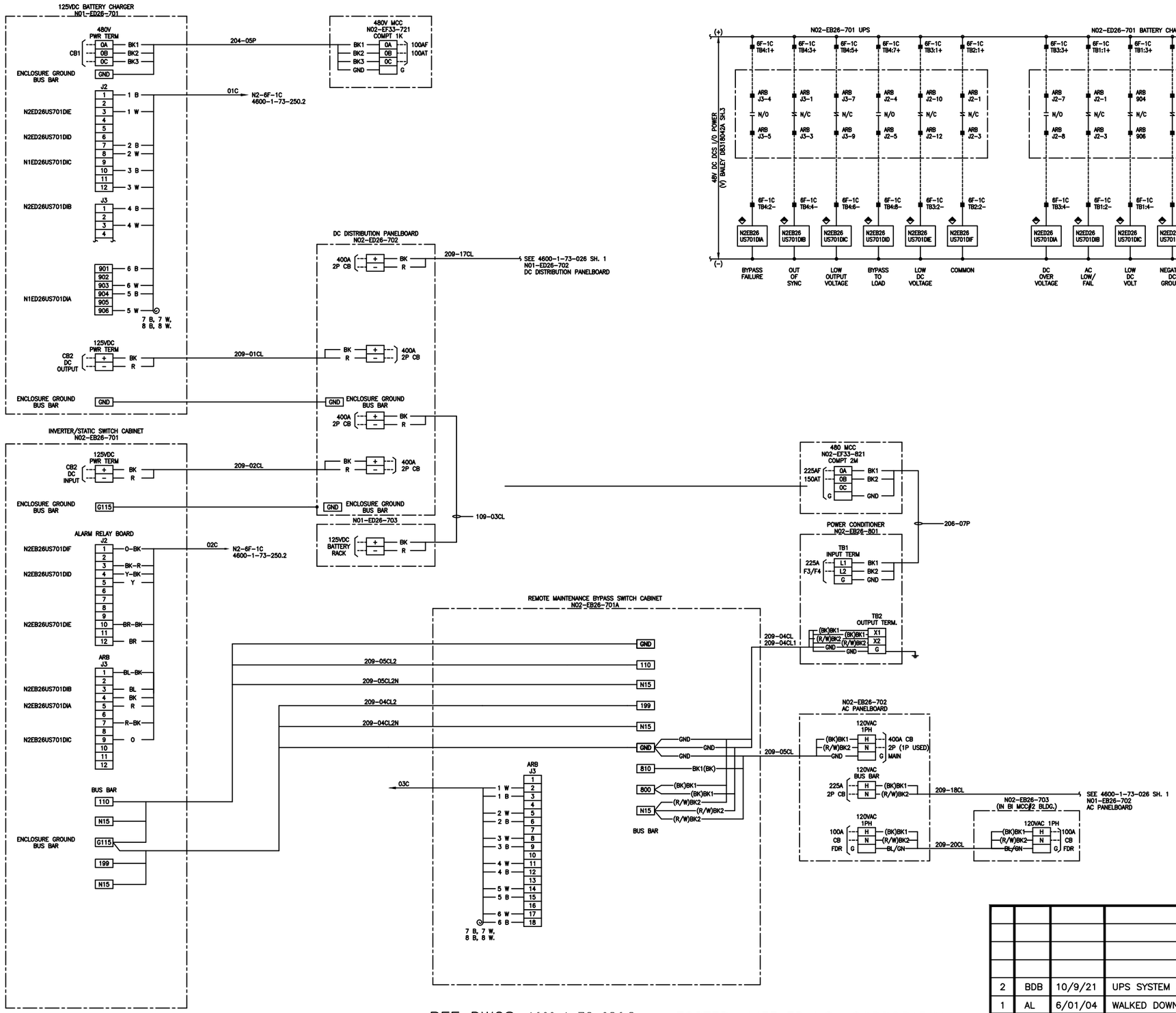

NOTES

1. FOR ONELINE, ELEMENTARY WIRING SYMBOLS, TYPICAL WIRING DIAGRAMS & ABBREVIATION LIST SEE DWG. 4600-1-73-002 SH 1 & 2.
2. FOR ELECTRICAL CABLE AND CONDUIT SCHEDULE, SEE DWG. 4600-4-73-001.

CONTROL NUMBER: 124091

REF DWGS: 4600-1-73-026.2

FOSTER WHEELER USA CORPORATION

REV No.	DRWN BY	DATE	DESCRIPTION	APPR BY
2	BDB	10/9/21	UPS SYSTEM UPGRADE	BDB
1	AL	6/01/04	WALKED DOWN	DEB

JEA PLANT SCHEMATIC

GEMS No. N02-EB

TITLE: ELEMENTARY WIRING DIAGRAM
UNIT #2 UPS & DC SYSTEM

GROUP: ELECTRICAL
SYSTEM: CONTROL ROOM INSTRUMENTATION

JEA DWG. No. E32EB3007C

SHEET 1 OF 1

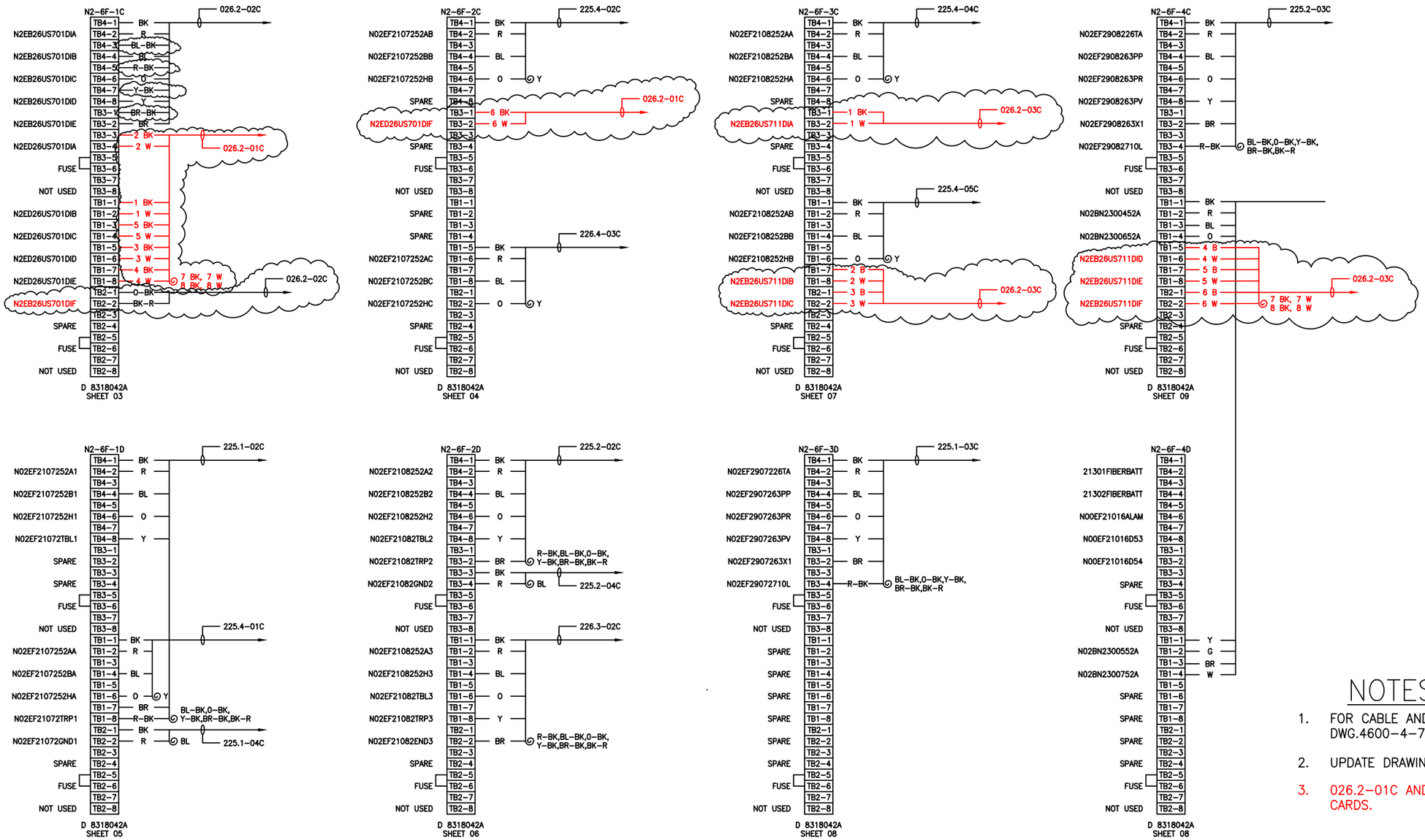

NOTES

1. FOR CABLE AND CONDUIT SCHEDULE SEE DWG.4600-4-73-001.
2. UPDATE DRAWINGS FOR PA LO PUMP WIRING
3. 026.2-01C AND 026.2-02C SPAN MULTIPLE CARDS.

CONTROL NUMBER: 121138

REV No.	DRWN BY	DATE	DESCRIPTION	APPR BY
3	BDB	7/7/21	INV CHRGR & RMBS ALARMS	BDB
2	KW	2/08/19	PA LUBE OIL GRID	
1	AL	5/26/04	WALKED DOWN	DEB

JEA PLANT SCHEMATIC

GEMS No. N02-EA27-006

TITLE: DCS DIGITAL TERMINATION DIAGRAMS BAY NO.6F

GROUP: ELECTRICAL
SYSTEM: CONTROL ROOM INSTRUMENTATION

JEA DWG. No. E32EA3014C

SHEET 1 OF 1

REF DWGS: 4600-1-73-250.2

FOSTER WHEELER USA CORPORATION

N02 Cable Tags	Origin	Destination	Cable Type	Cable Size	Quantity
209-01CL POSITIVE	BATTERY CHARGER	125V DC PANEL	RHH-RHW-2 DLO	500MCM	2
209-01CL NEGATIVE	BATTERY CHARGER	125V DC PANEL	RHH-RHW-2 DLO	500MCM	2
209-02CL POSITIVE	125V DC CABINET	INVERTER	RHH-RHW-2 DLO	500MCM	2
209-02CL NEGATIVE	125V DC CABINET	INVERTER	RHH-RHW-2 DLO	500MCM	2
209-04CL2 120VAC BYPASS SW TO INV	BYPASS SWITCH	INVERTER	RHH-RHW-2 DLO	500MCM	2
209-04CL2 NEUTRAL BYPASS SW TO INV	BYPASS SWITCH	INVERTER	RHH-RHW-2 DLO	500MCM	2
209-05CL2 120VAC INV OUTPUT	INVERTER	BYPASS SWITCH	RHH-RHW-2 DLO	500MCM	2
209-05CL2N NEUTRAL INV OUTPUT	INVERTER	BYPASS SWITCH	RHH-RHW-2 DLO	500MCM	2
209-04CL	BYPASS XFMR	BYPASS SWITCH	RHH-RHW-2 DLO	500MCM	2
209-04CLN	BYPASS XFMR	BYPASS SWITCH	RHH-RHW-2 DLO	500MCM	2
209-05CL 120VAC SW TO AC PANEL	BYPASS SWITCH	N02 UPS PANEL	RHH-RHW-2 DLO	500MCM	2
209-05CLN NEUTRAL SW TO AC PANEL	BYPASS SWITCH	N02 UPS PANEL	RHH-RHW-2 DLO	500MCM	2
204-05P	480V MCC 721	Battery Charger	XHHW-2	3/C #2 w/#6 GND	2
204-05P A PHASE	480V MCC 721	Battery Charger	XHHW-2	#2	2
204-05P B PHASE	480V MCC 721	Battery Charger	XHHW-2	#2	2
204-05P C PHASE	480V MCC 721	Battery Charger	XHHW-2	#2	2
026.2-01C BATT CHRGR ALARMS	BATTERY CHRGR	N2-6F-1C		8 PAIR # 14	2
026.2-01C LOW AC INPUT	J2 - 1 + J2 - 3	"1C" TB1:1 + TB1:2 -			4
026.2-01C HIGH DC VOLT	J2 - 4 + J2 - 6	"1C" TB3:3 + TB3:4 -			4
026.2-01C NEG GND	J2 - 10 + J2 - 12	"1C" TB1:5 + TB1:6 -			4
026.2-01C POS GND	J3 - 1 + J3 - 3	"1C" TB1:7 + TB1:8 -			4
026.2-01C LOW DC VOLT	904 + 906	"1C" TB1:3 + TB1:4 -			4
		N2-6F-2C			
026.2-01C CHRGR COMMON	901 + 903	"3C" TB3:1 + TB3:2 -			4
026.2-02C INVERTER ALARMS	INVERTER	N2-6F-1C	B,W TSP Tray.	8 PAIR # 14	2
026.2-02C ALT LINE FAILURE	J3 - 4 + J3 - 5	"1C" TB4:1 + TB4:2			4
026.2-02C OUT OF SYNC	J3 - 1 + J3 - 3	"1C" TB4:3 + TB4:4			4
026.2-02C LOW OUTPUT VOLTAGE	J3 - 7 + J3 - 9	"1C" TB4:5 + TB4:6			4
026.2-02C STATC SW ON ALT	J2 - 4 + J2 - 5	"1C" TB4:7 + TB4:8			4
026.2-02C LOW DC VOLTAGE	J2 - 10 + J2 - 12	"1C" TB3:1 + TB3:2			4
026.2-02C INV COMMON ALM	J2 - 1 + J2 - 3	"1C" TB2:1 + TB2:2 -			4
026.2-03C RMBS ALARMS	RMBS	N2-6F-3C & 4C	B,W TSP Tray.	8 PAIR # 14	2
026.2-03C NORM SOURCE TO LOAD	COM. N.O.	"3C" TB3:1 + TB3:2		1 PAIR # 14	4
026.2-03C BYPASS TO LOAD	COM. N.O.	"3C" TB1:7 + TB1:8		1 PAIR # 14	4
026.2-03C ISOLATED BYPASS	COM. N.O.	"3C" TB2:1 + TB2:2		1 PAIR # 14	4
026.2-03C IN SYNC	COM. N.O.	"4C" TB1:5 + TB1:6		1 PAIR # 14	4
026.2-03C BYPASS SOURCE AVAILABLE	COM. N.O.	"4C" TB1:7 + TB1:8		1 PAIR # 14	4
026.2-03C NORMAL SOURCE AVAILABLE	COM. N.O.	"4C" TB1:1 + TB1:2		1 PAIR # 14	4