DEPARTMENT OF THE ARMY
JACKSONVILLE DISTRICT CORPS OF ENGINEERS
P.O. BOX 4970
JACKSONVILLE, FLORIDA 32232-0019

May 25, 2018

REPLY TO ATTENTION OF

Regulatory Division
North Permits Branch
Jacksonville Permits Section
SAJ-2017-02228(NW-RPR)

Andrew Sears
Jacksonville Electric Authority
21 West Church St. T-8
Jacksonville, FL 32202

Dear Mr. Sears:

The U.S. Army Corps of Engineers (Corps) assigned your application for a Department of the Army permit the file number SAJ-2017-02228. A review of the information and drawings provided indicates that the proposed work would result in the replacement of a submerged 24-inch ductile iron raw sewage force main with a 30-inch stainless steel aerial sewage force main. The project is located at Butcher Pen Creek Bridge, in Section 42, Township 3 South, Range 26 East, Jacksonville, Duval County, Florida.

Your project, as depicted on the enclosed drawings, is authorized by Nationwide Permit (NWP) Number 12. In addition, project specific conditions have been enclosed. This verification is valid until **March 18, 2022**. Furthermore, if you commence or are under contract to commence this activity before the date that the relevant nationwide permit is modified or revoked, you will have 12 months from the date of the modification or revocation of the NWP to complete the activity under the present terms and conditions of this nationwide permit. Please access the U.S. Army Corps of Engineers' (Corps) Jacksonville District's Regulatory Internet page to access Internet links to view the Final Nationwide Permits, Federal Register Vol. 82, dated January 6, 2017, specifically pages 1983 to 2008, and the table of Regional Conditions. The Internet page address is:

http://www.saj.usace.army.mil/Missions/Regulatory.aspx

Please be aware this Internet address is case sensitive and should be entered as it appears above. Once there you will need to click on “Source Book”; and, then click on “Nationwide Permits.” These files contain the description of the Nationwide Permit authorization, the Nationwide Permit general conditions, and the regional conditions, which apply specifically to this verification for NWP 12. Enclosed is a list of the six General Conditions, which apply to all Department of the Army authorizations. You

must comply with all of the special and general conditions and any project specific condition of this authorization or you may be subject to enforcement action. In the event you have not completed construction of your project within the specified time limit, a separate application or re-verification may be required.

The following special conditions are included with this verification:

1. **Reporting Address:** The Permittee shall submit all reports, notifications, documentation and correspondence required by the general and special conditions of this permit to the following address:

a. For standard mail: U.S. Army Corps of Engineers, Regulatory Division, Special Projects and Enforcement Branch, P.O. Box 4970, Jacksonville, Florida 32232-0019.

b. For electronic mail SAJ-RD-Enforcement@usace.army.mil (not to exceed 10 MB). The Permittee shall reference this permit number, SAJ-2017-02228(NW - RPR), on all submittals.

2. **Commencement Notification:** Within 10 days from the date of initiating the work authorized by this permit, the Permittee shall provide a written notification of the date of commencement of authorized work to the Corps.

3. **Assurance of Navigation and Maintenance:** The Permittee understands and agrees that, if future operations by the United States require the removal, relocation, or other alteration, of the structures or work herein authorized, or if in the opinion of the Secretary of the Army or his authorized representative, said structure or work shall cause unreasonable obstruction to the free navigation of the navigable waters, the Permittee will be required, upon due notice from the Corps of Engineers, to remove, relocate, or alter the structural work or obstructions caused thereby, without expense to the United States. No claim shall be made against the United States on account of any such removal or alteration.

4. **Turbidity Barriers:** Prior to the initiation of any of the work authorized by this permit, the Permittee shall install floating turbidity barriers with weighted skirts that extend to the bottom around all work areas that are in, or adjacent to, surface waters. The turbidity barriers shall remain in place and be maintained until the authorized work has been completed and all suspended and erodible materials have been stabilized. Turbidity barriers shall be removed upon stabilization of the work area.

5. **Erosion Control**: Prior to the initiation of any work authorized by this permit, the Permittee shall install erosion control measures along the perimeter of all work areas to

prevent the displacement of fill material outside the work area into waters of the United States. Immediately after completion of the final grading of the land surface, all slopes, land surfaces, and filled areas shall be stabilized using sod, degradable mats, barriers, or a combination of similar stabilizing materials to prevent erosion. The erosion control measures shall remain in place and be maintained until all authorized work is completed and the work areas are stabilized.

6. **Manatee Conditions:** The Permittee shall comply with the "Standard Manatee Conditions for In-Water Work – 2011" (enclosed).

7. **Cultural Resources/Historic Properties:**

a. No structure or work shall adversely affect impact or disturb properties listed in the *National Register of Historic Places* (NRHP) or those eligible for inclusion in the NRHP.

b. If during the ground disturbing activities and construction work within the permit area, there are archaeological/cultural materials encountered which were not the subject of a previous cultural resources assessment survey (and which shall include, but not be limited to: pottery, modified shell, flora, fauna, human remains, ceramics, stone tools or metal implements, dugout canoes, evidence of structures or any other physical remains that could be associated with Native American cultures or early colonial or American settlement), the Permittee shall immediately stop all work and ground-disturbing activities within a 100-meter diameter of the discovery and notify the Corps within the same business day (8 hours). The Corps shall then notify the Florida State Historic Preservation Officer (SHPO) and the appropriate Tribal Historic Preservation Officer(s) (THPO(s)) to assess the significance of the discovery and devise appropriate actions.

c. Additional cultural resources assessments may be required of the permit area in the case of unanticipated discoveries as referenced in accordance with the above Special Condition; and if deemed necessary by the SHPO, THPO(s), or Corps, in accordance with 36 CFR 800 or 33 CFR 325, Appendix C (5). Based, on the circumstances of the discovery, equity to all parties, and considerations of the public interest, the Corps may modify, suspend or revoke the permit in accordance with 33 CFR Part 325.7. Such activity shall not resume on non-federal lands without written authorization from the SHPO for finds under his or her jurisdiction, and from the Corps.

d. In the unlikely event that unmarked human remains are identified on non-federal lands, they will be treated in accordance with Section 872.05 Florida Statutes. All work and ground disturbing activities within a 100-meter diameter of the unmarked human remains shall immediately cease and the Permittee shall immediately notify the medical examiner, Corps, and State Archaeologist within the same business day (8-hours). The

Corps shall then notify the appropriate SHPO and THPO(s). Based, on the circumstances of the discovery, equity to all parties, and considerations of the public interest, the Corps may modify, suspend or revoke the permit in accordance with 33 CFR Part 325.7. Such activity shall not resume without written authorization from the State Archaeologist and from the Corps.

8. **As-Built Certification:** Within 60 days of completion of the work authorized by this permit, the Permittee shall submit as-built drawings of the authorized work and a completed “As-Built Certification By Professional Engineer” form (enclosed) to the Corps. The as-built drawings shall be signed and sealed by a registered professional engineer and include the following:

a. A plan view drawing of the location of the authorized work footprint, as shown on the permit drawings, with transparent overlay of the work as constructed in the same scale as the permit drawings on 8½-inch by 11-inch sheets. The plan view drawing should show all "earth disturbance," including wetland impacts and water management structures.

b. A list of any deviations between the work authorized by this permit and the work as constructed. In the event that the completed work deviates, in any manner, from the authorized work, describe on the attached “As-Built Certification By Professional Engineer” form the deviations between the work authorized by this permit and the work as constructed. Clearly indicate on the as-built drawings any deviations that have been listed. Please note that the depiction and/or description of any deviations on the drawings and/or “As-Built Certification By Professional Engineer” form does not constitute approval of any deviations by the Corps.

c. Include the Department of the Army permit number on all sheets submitted.

This letter of authorization does not obviate the necessity to obtain any other Federal, State, or local permits, which may be required. Prior to the initiation of any construction, projects qualifying for this Nationwide permit must qualify for an exemption under section 403.813(1), Florida Statutes or 373.406, Florida Statutes, or otherwise be authorized by the applicable permit required under Part IV of Chapter 373, Florida Statutes, by the Department of Environmental Protection, a water management district under section 373.069, Florida Statutes, or a local government with delegated authority under section 373.441, Florida Statutes, and receive Water Quality Certification and applicable Coastal Zone Consistency Concurrence or waiver thereto, as well as any authorizations required for the use of state-owned submerged lands under Chapter 253, Florida Statutes, and, as applicable, Chapter 258, Florida Statutes. You should check

State-permitting requirements with the Florida Department of Environmental Protection or the appropriate water management district.

This letter of authorization does not include conditions that would prevent the 'take' of a state-listed fish or wildlife species. These species are protected under sec. 379.411, Florida Statutes, and listed under Rule 68A-27, Florida Administrative Code. With regard to fish and wildlife species designated as species of special concern or threatened by the State of Florida, you are responsible for coordinating directly with the Florida Fish and Wildlife Conservation Commission (FWC). You can visit the FWC license and permitting webpage (http://www.myfwc.com/license/wildlife/) for more information, including a list of those fish and wildlife species designated as species of special concern or threatened. The Florida Natural Areas Inventory (http://www.fnai.org/) also maintains updated lists, by county, of documented occurrences of those species.

This letter of authorization does not give absolute Federal authority to perform the work as specified on your application. The proposed work may be subject to local building restrictions mandated by the National Flood Insurance Program. You should contact your local office that issues building permits to determine if your site is located in a flood-prone area, and if you must comply with the local building requirements mandated by the National Flood Insurance Program.

If you are unable to access the internet or require a hardcopy of any of the conditions, limitations, or expiration date for the above referenced NWP, please contact Renee Riker by telephone at 904-232-1497, or by email at renee.p.riker@usace.army.mil.

Thank you for your cooperation with our permit program. The Corps Jacksonville District Regulatory Division is committed to improving service to our customers. We strive to perform our duty in a friendly and timely manner while working to preserve our environment. We invite you to complete our automated Customer Service Survey at http://corpsmapu.usace.army.mil/cm_apex/f?p=regulatory_survey. Please be aware this Internet address is case sensitive; and, you will need to enter it exactly as it appears above. Your input is appreciated – favorable or otherwise.

Sincerely,

Susan R Kaynor

Susan R. Kaynor
Chief, Jacksonville Permits Section

Enclosures

Copies Furnished:

Leslie S. Samel, PE, Mott MacDonald, leslie.samel@motlmac.com

CESAJ-RD-PE

GENERAL CONDITIONS
33 CFR PART 320-330

1. The time limit for completing the work authorized ends on **March 18, 2022**.

2. You must maintain the activity authorized by this permit in good condition and in conformance with the terms and conditions of this permit. You are not relieved of this requirement if you abandon the permitted activity, although you may make a good faith transfer to a third party in compliance with General Condition 4 below. Should you wish to cease to maintain the authorized activity or should you desire to abandon it without a good faith transfer, you must obtain a modification of this permit from this office, which may require restoration of the area.

3. If you discover any previously unknown historic or archeological remains while accomplishing the activity authorized by this permit, you must immediately notify this office of what you have found. We will initiate the Federal and state coordination required to determine if the remains warrant a recovery effort of if the site is eligible for listing in the National Register of Historic Places.

4. If you sell the property associated with this permit you must obtain the signature of the new owner in the space provided and forward a copy of the permit to this office to validate the transfer of this authorization.

5. If a conditioned water quality certification has been issued for your project, you must comply with the conditions specified in the certification as special conditions to this permit. For your convenience, a copy of the certification is attached if it contains such conditions.

6. You must allow a representative from this office to inspect the authorized activity at any time deemed necessary to ensure that it is being or has been accomplished in accordance with the terms and conditions of your permit.

DEPARTMENT OF THE ARMY PERMIT TRANSFER REQUEST

PERMIT NUMBER: SAJ-2017-02228(NW-RPR)

When the structures or work authorized by this permit are still in existence at the time the property is transferred, the terms and conditions of this permit will continue to be binding on the new owner(s) of the property. Although the construction period for works authorized by Department of the Army permits is finite, the permit itself, with its limitations, does not expire.

To validate the transfer of this permit and the associated responsibilities associated with compliance with its terms and conditions, have the transferee sign and date below and mail to the U.S. Army Corps of Engineers, Enforcement Section, Post Office Box 4970, Jacksonville, FL 32232-0019 or electronic mail at saj-rd-enforcement@usace.army.mil.

_____
(TRANSFEREE-SIGNATURE)

_____
(DATE)

_____
(NAME-PRINTED)

_____

_____
(MAILING ADDRESS)

_____
(CITY, STATE, ZIP CODE)

_____
(SUBDIVISION)

_____ _____
(LOT) **(BLOCK)**

_____
(STREET ADDRESS)

AS-BUILT CERTIFICATION BY PROFESSIONAL ENGINEER

Submit this form and one set of as-built engineering drawings to the U.S. Army Corps of Engineers, Enforcement Section, P.O. Box 4970, Jacksonville, FL, 32232-0019. For electronic mail saj-rd-enforcement@usace.army.mil *(not to exceed 10 MB). If you have questions regarding this requirement, please contact the Enforcement Branch at 904-232-3131.*

1. Department of the Army Permit Number: SAJ-2017-02228(NW-RPR)

2. Permittee Information:

Name: _____

Address: _____

_____

3. Project Site Identification (physical location/address):

_____

_____

_____

4. As-Built Certification: I hereby certify that the authorized work, including any mitigation required by Special Conditions to the permit, has been accomplished in accordance with the Department of the Army permit with any deviations noted below. This determination is based upon on-site observation, scheduled, and conducted by me or by a project representative under my direct supervision. I have enclosed one set of as-built engineering drawings.

_____	_____
Signature of Engineer	Name (*Please type*)
_____	_____
(FL, PR, or VI) Reg. Number	Company Name

_____	_____	_____
City	State	ZIP

(Affix Seal)

_____	_____
Date	Telephone Number

Date Work Started:_____ Date Work Completed:_____

Identify any deviations from the approved permit drawings and/or special conditions (attach additional pages if necessary):

_____

_____

_____

_____

_____

_____

_____

_____

_____

_____

_____

_____

STANDARD MANATEE CONDITIONS FOR IN-WATER WORK

2011

The permittee shall comply with the following conditions intended to protect manatees from direct project effects:

a. All personnel associated with the project shall be instructed about the presence of manatees and manatee speed zones, and the need to avoid collisions with and injury to manatees. The permittee shall advise all construction personnel that there are civil and criminal penalties for harming, harassing, or killing manatees which are protected under the Marine Mammal Protection Act, the Endangered Species Act, and the Florida Manatee Sanctuary Act.

b. All vessels associated with the construction project shall operate at "Idle Speed/No Wake" at all times while in the immediate area and while in water where the draft of the vessel provides less than a four-foot clearance from the bottom. All vessels will follow routes of deep water whenever possible.

c. Siltation or turbidity barriers shall be made of material in which manatees cannot become entangled, shall be properly secured, and shall be regularly monitored to avoid manatee entanglement or entrapment. Barriers must not impede manatee movement.

d. All on-site project personnel are responsible for observing water-related activities for the presence of manatee(s). All in-water operations, including vessels, must be shutdown if a manatee(s) comes within 50 feet of the operation. Activities will not resume until the manatee(s) has moved beyond the 50-foot radius of the project operation, or until 30 minutes elapses if the manatee(s) has not reappeared within 50 feet of the operation. Animals must not be herded away or harassed into leaving.

e. Any collision with or injury to a manatee shall be reported immediately to the Florida Fish and Wildlife Conservation Commission (FWC) Hotline at 1-888-404-3922. Collision and/or injury should also be reported to the U.S. Fish and Wildlife Service in Jacksonville (1-904-731-3336) for north Florida or Vero Beach (1-772-562-3909) for south Florida, and to FWC at ImperiledSpecies@myFWC.com

f. Temporary signs concerning manatees shall be posted prior to and during all in-water project activities. All signs are to be removed by the permittee upon completion of the project. Temporary signs that have already been approved for this use by the FWC must be used. One sign which reads *Caution: Boaters* must be posted. A second sign measuring at least 8 ½" by 11" explaining the requirements for "Idle Speed/No Wake" and the shut down of in-water operations must be posted in a location prominently visible to all personnel engaged in water-related activities. These signs can be viewed at MyFWC.com/manatee. Questions concerning these signs can be sent to the email address listed above.

CAUTION: MANATEE HABITAT

All project vessels

IDLE SPEED / NO WAKE

When a manatee is within 50 feet of work
all in-water activities must

SHUT DOWN

Report any collision with or injury to a manatee:

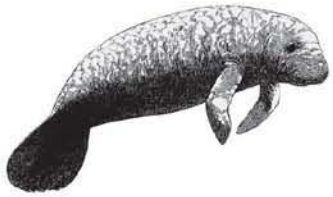

Wildlife Alert:

1-888-404-FWCC(3922)

cell *FWC or #FWC

CONSTRUCTION DRAWINGS
FOR
WEST GRID LENOX TO TIMUQUANA FORCE MAIN IMPROVEMENTS WILSON TO TIMUQUANA SEGMENT
PREPARED FOR:

JEA
Building Community®

JEA PROJECT NO.: 8003534
MM PROJECT NO.: 376869
PERMIT SUBMITTAL
APRIL 2018

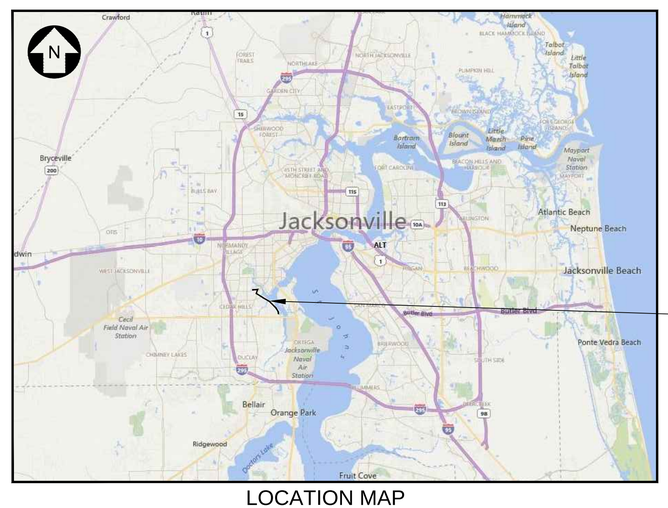

PROJECT LOCATION

LOCATION MAP
SCALE: NTS

MOTT MACDONALD
Mott MacDonald Florida, LLC

Architects Engineers Surveyors
AA - C0000035 EB - 0000155 LB - 0006783
10245 Centurion Pkwy. N., Suite 320
Jacksonville, Florida 32256
Telephone: (904) 203-1090

IFB BID NO.:
BID DUE DATE:
TIME OF RECEIPT:
TIME OF OPENING:
BID PLACE:

CITY OF JACKSONVILLE NOTES

GENERAL

All construction shall be performed in accordance with the approved plans and comply with all standard city policies and practices. City approval is contingent upon any required state or federal permit approvals such as those from the Department of Environmental Protection or the St. Johns River Water Management District (SJRWMD).

UTILITY WORK

Plan approval through Development Services does not include utilities. Proposed water, sewer or electric construction must be approved separately through the respective utility company. In most cases, this will be:

JEA
JEA Tower - 4th Floor
21 W. Church Street
Jacksonville, FL 32202
http://www.jea.com/business/services/devandbuild/developers.asp

WORK WITHIN THE RIGHT-OF-WAY

CITY: Except for new subdivision infrastructure construction, all work performed within a City of Jacksonville right-of-way or easement requires a Right-of-way Permit. The contractor performing the proposed work must have a current Right-of-way Bond on file with Development Services. Right-of-way Permit applications are processed at:

Development Services Customer Service Counter
Edward Ball Building, 2nd Floor
214 N. Hogan St.
Jacksonville, FL 32202
(904) 255-8572
http://row.jaxdev.info/

STATE: All work performed within a state right-of-way requires a permit from the Florida Department of Transportation (FDOT). It is the developer's responsibility to obtain required FDOT permits or maintenance-of-traffic approvals for work within FDOT right-of-ways. The FDOT regional office can be contacted at (904) 360-5200 Any changes to the approved plans needed for FDOT approval must be submitted to Development Services as revisions.

Adjacent State Roads: _____

RAILROAD: Railroad companies may require special approvals or permits to work within their right-of-ways. It is the developer's responsibility to obtain permission from any railroad right-of-way owner before performing any work within their right-of-way.

STORMWATER

Annual reports in compliance with the SJRWMD stormwater permits are required from the maintenance entity of all stormwater management facilities. Send copies of the reports to:

Engineering and Construction Management
Edward Ball Building, 10th Floor
214 N. Hogan St.
Jacksonville, FL 32202
http://www.coj.net/Departments/Public+Works/Engineering+and+Construction+Management/

The owner of any project one (1) acre or larger is required to provide a Notice of Intent (NOI) in accordance with criteria set forth in the city's NPDES permit within 48 hours of beginning construction. Send NOI and NOI fee to:

Florida Department of Environmental Protection
NPDES Stormwater Notices Center, Mail Station #2510
2600 Blair Stone Road
Tallahassee, Florida 32399-2400
(866) 336-6312
http://www.dep.state.fl.us/water/stormwater/npdes/

The contractor shall contact the Environmental Quality Division, Erosion and Sedimentation Control Section (ESC) to provide verification that applicable stormwater permits have been obtained and to schedule a pre-construction ESC site inspection:

Environmental Quality Division
407 North Laura Street, Third Floor
Jacksonville, FL, 32202
(904) 255-7222

FIRE MARSHALL

Plan review and approval does not relieve the contractor of complying with all applicable State Fire Codes.

Underground mains and hydrants shall be installed, completed, and in service prior to construction work.

Underground contractor shall submit to the Fire Marshall for approval complete specs for all underground pipe and fittings relating to fire protection PRIOR to installation and inspection. Contractor shall include manufacturer's name and pipe ID along with contractor's state license number.

LANDSCAPE

A Site Work Permit is required for this project.

☐ Tree Fund payment is due: _____ inches at $_____ = $_____

☐ Article 25 funds are due: _____ inches at $_____ = $_____

TRAFFIC ENGINEERING

TRAFFIC SIGNS

Metro Name (each) _____

Standard (each) _____

Stop/Yield (each) _____

Design (per plat) 1 per plat

Installation (per hour) 1 per 2 signs (rounded up)

_____ Streetlights Required

NOTE: Traffic sign costs change from time to time. Consult Attachment 8 of the Land Development Procedures Manual (http://ldpm.jaxdev.com/) for the current rates before paying for any sign installations.

No lane closures allowed from 7 a.m. till 9 a.m. and from 4 p.m. till 6 p.m.

PLAN APPROVAL

Date _____ Development Services Division (Chief) _____

Date _____ Review Group (Reviewer) _____

Plan approval is valid for five years after the initial approval date. Revisions made after the initial approval date do not extend this five-year time frame.

PLAN APPROVAL IS SUBJECT TO THE FOLLOWING NOTES AND CONDITIONS:

_____
_____
_____
_____
_____
_____
_____
_____

GENERAL PROJECT INFORMATION

GENERAL	
City Development Number	4161.234
Concurrency Application Number	N/A
Property Appraiser Number (RE #)	* (BELOW)
Zoning Designation	RLD-60, PBF-2, RMD-B, CRO, CN, CCG-1, RLD-90, RMD-D
Zoning Application(s) (if any)	N/A
PUD Ordinance Number	N/A
FIRM - Community - Panel	12031CO342H, 12031C0363H, 12031C0364H & 12031C0527H
Flood Zones (Show in Plans)	X
Base Flood Elev. (Show in Plans)	BFE: 4 & 21
Vertical Datum Used for Project	NAVD 88
JEA Availability Number	JEA PROJ. 8003534
SUBDIVISION	
PSD Number	N/A
City or Private Inspection	N/A
Public or Private Roads	N/A
Subdivision ("911") Disk Provided?	N/A
NON-SUBDIVISION	
North American Industry Classification System (NAICS)	23711
Impervious Area (Sq. Ft.)	NO CHANGE

WILSON BLVD, SUDBURY AVE, CEDAR HILLS BLVD, BLANDING BLVD, CONFEDERATE POINT RD AND ORTEGA FARMS RD RIGHT-OF-WAY.

SURVEY AND LOCATE DATA:

(NOT APPLICABLE / APPLICABLE)

☐ ☒ 1. ALL ELEVATIONS ARE BASED ON NAVD 88 DATUM AND SHOWN IN FEET.

☐ ☒ 2. LOCATION OF EXISTING UTILITIES OBTAINED BY SOFT DIG LOCATES WHERE SHOWN ON PLANS, OR INCLUDED WITH BID SPECS.

☐ ☒ 3. EXISTING WATER AND SEWER LINES ARE SHOWN AS PER FIELD LOCATES OR SUPPLEMENTED WITH AS-BUILT PLANS.

☒ ☐ 4. UNDERGROUND UTILITIES WERE LOCATED UTILIZING GROUND PENETRATING RADAR (GPR) AND A DIGITAL LOCATOR. CONTRACTOR SHALL BE AWARE THAT IN SOME CASES UTILITIES HAVE BEEN LOCATED, AND SURVEY HAS BEEN COMPLETED ONLY ON ONE SIDE OF THE ROAD.

☐ ☒ 5. ALL PIPE LENGTHS SHOWN ON PLAN AND PROFILES ARE FROM CENTER TO CENTER OF MANHOLES, CATCH BASINS, INLETS ETC. OR ALONG THE CENTER LINE OF FORCE MAINS AND WATER MAINS.

☒ ☐ 6. INVERT ELEVATIONS SHOWN ON DRAWINGS REFER TO THE NORTH RIM OF MANHOLES, UNLESS OTHERWISE INDICATED.

☐ ☒ 7. THE LOCATION OF ALL EXISTING SEWER AND WATER SERVICE LINES MAY NOT BE INDICATED ON THESE PLANS. THE LOCATION OF NEW SERVICES SHALL BE VERIFIED IN THE FIELD.

☐ ☒ 8. BENCHMARK DATA: NAVD 88 SEE SURVEYORS NOTES

PERMIT REQUIREMENTS (NOT ALL INCLUSIVE):

☐ ☒ 1. CONTRACTOR TO OBTAIN ALL REQUIRED RIGHT-OF-WAY PERMITS.

☐ ☒ 2. CONTRACTOR SHALL NOT OPEN CUT STREETS IN THE PROJECT AREA UNLESS SPECIFICALLY SHOWN ON PLANS

☐ ☒ 3. THE CONTRACTOR IS RESPONSIBLE FOR OBTAINING A CONSUMPTIVE USE PERMIT (C.U.P.) THROUGH THE ST. JOHNS RIVER WATER MANAGEMENT DISTRICT SHOULD DEWATERING ACTIVITIES BE REQUIRED.

☐ ☒ 4. THE DEPARTMENT OF TRANSPORTATION, DEPARTMENT OF ENVIRONMENTAL PROTECTION, RAILROAD COMPANIES AND C.O.J. ARE TO BE NOTIFIED IN ADVANCE OF CONSTRUCTION PER THEIR RESPECTIVE PERMIT CONDITIONS.

☐ ☒ 5. ALL WORK SHALL BE IN ACCORDANCE WITH BID DOCUMENTS, JEA WATER AND SEWER STANDARDS, DETAILS AND MATERIALS MANUAL, REV. JANUARY 2018 AND CITY OF JACKSONVILLE STANDARD SPECIFICATIONS AND DETAILS AND ALL APPLICABLE STATE AND LOCAL REGULATIONS.

☒ ☐ 6. IF SOLVENT CONTAMINATION IS FOUND IN THE PIPE TRENCH, WORK SHALL BE STOPPED AND THE PROPER AUTHORITIES NOTIFIED. WITH APPROVAL OF THE PERMITTING AGENCY, DUCTILE IRON PIPE, FITTINGS AND SOLVENT RESISTANT GASKET MATERIAL SHALL BE USED IN THE CONTAMINATED AREA. THE DUCTILE IRON PIPE SHALL EXTEND AT LEAST 100 FEET BEYOND ANY SOLVENT NOTED.

☐ ☒ 7. THE CONTRACTOR SHALL NOTIFY APPLICABLE UTILITY CONTACT PERSONNEL NOT LESS THAN ONE WEEK PRIOR TO CONSTRUCTION OF FACILITIES IN THEIR RESPECTIVE AREAS.

☐ ☒ 8. TREE PROTECTION SHALL BE IN ACCORDANCE WITH JACKSONVILLE ORDINANCE CODE 656 AND/OR AS DETAILED ON SPECIFIC PLAN SHEETS. NO TRIMMING OF OVERHANGING TREE LIMBS WILL BE ALLOWED. USE SMALLER EQUIPMENT IF NECESSARY.

☐ ☒ 9. THE CONTRACTOR SHALL LOCATE THE DRAINAGE INLET STRUCTURES IN THE PROJECT AREA AND ERECT SEDIMENTATION CONTROL DEVICES AS NECESSARY PER THE CITY OF JACKSONVILLE STORMWATER POLLUTION PREVENTION PLAN.

☐ ☒ 10. CONTRACTOR TO COORDINATE WORK WITH OTHER UTILITIES DURING CONSTRUCTION.

EXISTING UTILITY PROTECTION:

1. IN ORDER TO REDUCE THE DISRUPTION AND COST OF UTILITY DAMAGES OCCURRING IN THE CITY OF JACKSONVILLE RIGHT-OF-WAY AND EASEMENTS, THE CONTRACTOR SHALL PREVENT DAMAGES TO EXISTING UTILITIES CAUSED BY HIS WORK THROUGH FIELD VERIFICATION OF THE LOCATION OF THE EXISTING UTILITIES. IN THE CASE OF OPEN EXCAVATION, VERIFICATION MAY BE PERFORMED DURING THE CONTRACTORS WORK. IN THE CASE OF DIRECTIONAL DRILLING, VERIFICATION SHALL TAKE PLACE PRIOR TO MOBILIZATION OF THE DRILLING EQUIPMENT.

2. THE CONTRACTOR SHALL VERIFY THE LOCATION OF EXISTING UTILITIES AS NEEDED TO AVOID CONTACT. EXISTING UTILITIES SHALL BE EXPOSED USING DETECTION EQUIPMENT OR OTHER ACCEPTABLE MEANS. SUCH METHODS MAY INCLUDE BUT SHALL NOT BE LIMITED TO "SOFT DIG" EQUIPMENT AND GROUND PENETRATING RADAR (GPR). THE EXCAVATOR SHALL BE HELD LIABLE FOR DAMAGES CAUSED TO THE CITY'S/JEA'S INFRASTRUCTURE AND THE EXISTING FACILITIES OF OTHER UTILITY COMPANIES.

3. IT SHALL BE THE SOLE RESPONSIBILITY OF THE CONTRACTOR TO LOCATE AND AVOID ALL UTILITIES, OTHER STRUCTURES AND OBSTRUCTIONS BOTH ABOVE AND BELOW GROUND SURFACE. ALL DAMAGE RESULTING FROM THE CONTRACTOR'S FAILURE TO COMPLY WITH THIS REQUIREMENT SHALL BE REPAIRED AT THE CONTRACTOR'S EXPENSE.

RESTORATION NOTES:

1. THE CONTRACTOR SHALL EMPLOY A LAND SURVEYOR, REGISTERED IN THE STATE OF FLORIDA, TO REFERENCE AND RESTORE PROPERTY CORNERS AND LANDMARKS WHICH MAY BE DISTURBED BY CONSTRUCTION, KNOWN CORNER LOCATIONS ARE AVAILABLE FROM THE CITY OF JACKSONVILLE ENGINEERING DIVISION.
2. THE CONTRACTOR SHALL RESTORE/REPLACE ALL CULVERTS, HEADWALLS AND STORM DRAIN INLETS REMOVED OR DISTURBED BY THE CONSTRUCTION OPERATION.
3. TRAFFIC SIGNS AND PAVEMENT MARKINGS SHALL BE RESTORED TO THEIR PRE-CONSTRUCTION CONDITION IN ACCORDANCE WITH CITY OF JACKSONVILLE/FDOT STANDARD SPECIFICATIONS.
4. SIDEWALKS, DRIVEWAYS AND CURBING DAMAGED OR REMOVED DURING CONSTRUCTION SHALL BE REPLACED INACCORDANCE WITH CITY OF JACKSONVILLE OR FDOT STANDARD SPECIFICATIONS AS REQUIRED. SIDEWALKS REMOVED AND REPLACED IN CURB AND GUTTER AREAS AT INTERSECTIONS SHALL HAVE HANDICAP RAMPS INSTALLED. DRIVEWAYS AND SIDEWALKS SHALL BE SAWCUT ALONG THE RIGHT-OF-WAY LINE OR NEAREST JOINT AND REMOVED AND REPLACED TO THE EDGE OF STREET.
5. GRASS SOD SHALL BE FURNISHED AND PLACED IN THE AREAS DISTURBED OR DAMAGED BY THE CONSTRUCTION OPERATION.
6. ALL PAVEMENT REPAIR SHALL BE IN ACCORDANCE WITH THE CITY OF JACKSONVILLE/FDOT STANDARD DETAILS AND SPECIFICATIONS LATEST EDITION.
7. UNLESS OTHERWISE NOTED, REMOVE AND REPLACE EXISTING PAVEMENT AS PER C.O.J. CASE X (10) PAVEMENT REPLACEMENT DETAIL.
8. CONTRACTOR MUST MAINTAIN AND PRESERVE NEWLY GRADED AREAS AND REPAIR AREAS WHERE SETTLING AND EROSION HAVE OCCURRED.

UTILITY CONTACTS:

A. AT&T ~ GENERAL NUMBER — 904-519-2529
B. AT&T ~ ADAM DUGAN ~ NORTH DISTRICT — 904-781-0741
C. AT&T ~ BILL LAKE ~ SOUTH DISTRICT — 904-303-8754
D. CITY OF JACKSONVILLE ~ PUBLIC WORKS DEPT. — 904-255-8762
E. CITY OF JACKSONVILLE ~ TRAFFIC OPERATIONS — 904-387-8861
F. FLORIDA DEPT. OF TRANSPORTATION — 904-360-5200
G. JEA ~ WATER COLLECTION & DISTRIBUTION ~ RANDY ELLIS — 904-665-7133
H. JEA ~ SEWER COLLECTION & DISTRIBUTION ~ NATHANIAL ROUSE — 904-665-8183
I. JEA ~ GENERAL INFORMATION — 904-665-6000
J. JEA ~ PROJECT OUTREACH — 904-665-7500
K. JEA ~ POWER OUTAGES — 904-665-6000
L. JEA ~ SEWER PROBLEMS — 904-665-4802
M. JEA ~ WATER PROBLEMS — 904-665-4801
N. JEA ~ WATER & SEWER LOCATES — 904-665-8410
O. COMCAST ~ EMERGENCY HOTLINE — 904-380-6274
P. JACKSONVILLE TRANSIT AUTHORITY (JTA) ~ IVAN MITCHELL — 904-633-8523
Q. TECO/PEOPLES GAS ~ BEN MOBLEY — 904-545-8958
R. SUNSHINE ONE CALL — 811
S. FDOT - ITS - FOC ~ JOSH REICHERT — 904-360-5642
T. JEA ENVIRONMENTAL GROUP — 904 665-4517
U. COJ TRAFFIC MOT ~ RONNIE THIGPEN — 904-255-8704
V. COJ TRAFFIC SIGNALS ~ MASON BOYD — 904-255-7549
W. FLORIDA GAS TRANSMISSION ~ JACOB WALLACE — 325-494-0028

INSTALLATION NOTES:

(NOT APPLICABLE / APPLICABLE)

☒ ☐ 1. CONTRACTOR TO REHABILITATE ALL MANHOLES ON PIPE BURST SEWERS VIA COATING/LINING PER JEA SPECIFICATION 446-2, UNLESS OTHERWISE NOTED ON THE PLANS.

☒ ☐ 2. CONTRACTOR TO RENEW, REHABILITATE, REPLACE OR REINSTALL AS APPLICABLE ALL SERVICE LATERALS TO R.O.W. LINE.

☒ ☐ 3. CONTRACTOR TO INSTALL SEWER SERVICE PIPING A MINIMUM OF 60 INCHES BELOW GRADE. WHERE NEW SANITARY SEWER MAIN IS LESS THAN 5 FEET DEEP, THE SEWER SERVICE PIPE SHALL BE INSTALLED AS DEEP AS POSSIBLE.

☐ ☒ 4. WHEN THE DISTANCE BETWEEN A POWER POLE AND THE TRENCH IS LESS THAN THE TRENCH DEPTH, THE CONTRACTOR SHALL BE RESPONSIBLE FOR COORDINATING WITH JEA ELECTRICAL PERSONNEL TO SECURE POWER POLES. THE CONTACTS FOR JEA ARE AS FOLLOWS:
NORTHSIDE~EAST of US-1 MIKE CORBITT @ 665-7991 (mobile 662-0635)
NORTHSIDE~WEST of US-1 ANDY YEAGER @ 665-7998 (mobile 662-0622)
NORTHSIDE~BACKUP ALAN AINSLEY @ 665-7303 (mobile 662-6557)
SOUTHSIDE~SOUTH of BEACH BLVD. TOM KERNS @ 665-6847 (mobile 860-1687)
SOUTHSIDE~NORTH of BEACH BLVD. DERYL BASFORD @ 665-6855 (mobile 662-0616)
SOUTHSIDE~BACKUP EDDIE GALES @ 665-6855 (mobile 662-0616)
A MINIMUM OF TWO (2) WORKING DAYS NOTICE IS REQUIRED FOR AN OUTSIDE MEETING WITH JEA ELECTRICAL TO DISCUSS THE REQUIRED WORK. ADDITIONAL TIME WILL BE REQUIRED BY JEA ELECTRICAL FOR ANY REQUIRED WORK TO BE ACCOMPLISHED.

☐ ☒ 5. ALL NEW STORM DRAIN PIPE JOINTS SHALL BE WRAPPED WITH FILTER FABRIC.

☐ ☒ 6. THE DESIGN FOR THE PROJECT IS BASED UPON THE "OPEN-CUT" METHOD OF CONSTRUCTION. IF USING ALTERNATIVE MEANS OR METHODS, THE CONTRACTOR SHALL FOLLOW ALL APPLICABLE STANDARDS FOR THAT MEANS OR METHOD.

☐ ☒ 7. THE CONTRACTOR SHALL MINIMIZE SERVICE INTERRUPTIONS AT SERVICE CONNECTIONS. THE MEANS AND METHODS SHALL BE LEFT TO THE DISCRETION OF THE CONTRACTOR, SUBJECT TO THE REQUIREMENTS OF THE CONTRACT SPECIFICATIONS. NO EXISTING ACTIVE SERVICE SHALL BE LEFT INTERRUPTED AT THE END OF THE WORK DAY.

☐ ☒ 8. CONTRACTOR SHALL PROVIDE ADDITIONAL CORPORATION STOPS FOR FILLING AND DRAINING PURPOSES DURING CONSTRUCTION AS NEEDED. CORPORATION STOPS ARE TO BE PLUGGED AND LEFT IN PLACE. INDICATE CORPORATION STOP LOCATIONS ON RECORD DRAWINGS (AS-BUILTS).

☒ ☐ 9. WATER AND SEWER SERVICES SHALL BE TRANSFERRED TO THE NEW MAIN UPON COMPLETION AND F.D.E.P./J.E.A. CERTIFICATION, AND PRIOR TO THE EXISTING MAINS BEING ABANDONED.

☐ ☒ 10. IF EXISTING VALVES ARE IN UNPAVED AREAS AND ARE TO BE TAKEN OUT OF SERVICE, THEY SHALL BE CLOSED AND THE VALVE BOX AND COVER SHALL BE REMOVED. IF THE VALVES ARE UNDER PAVED AREAS, THEY SHALL BE CLOSED, THE VALVE BOX GROUT FILLED AND THE COVER REMOVED.

☒ ☐ 11. CONTRACTOR SHALL REPLACE EXISTING WATER METER BOXES WHEN DEEMED NECESSARY BY THE JEA INSPECTOR.

☐ ☒ 12. CONTRACTOR TO PROVIDE ADDITIONAL DEPTH OF BURY VIA PIPE JOINT DEFLECTION TO ACCOMMODATE VALVE SELECTION PER JEA STANDARDS.

☒ ☐ 13. WATER METERS MAY REQUIRE RELOCATION FOR CONSTRUCTION, CONTRACTOR SHALL CONTACT JEA METER DEPARTMENT AND RELOCATE WATER METERS AS NECESSARY.

☐ ☒ 14. PRIOR TO COMMENCING ANY EXCAVATION OR GRADING, THE CONTRACTOR SHALL OBTAIN ALL GEOTECHNICAL AND TOPOGRAPHIC SURVEY DATA AND LOCATIONS OF ABOVE GROUND AND UNDERGROUND UTILITIES. SHOULD THE CONTRACTOR DISCOVER ANY INACCURACIES, ERRORS OR OMISSIONS IN THE SURVEY DATA, HE SHALL IMMEDIATELY NOTIFY THE DESIGN ENGINEER IN ORDER THAT PROPER ADJUSTMENTS CAN BE ANTICIPATED AND ORDERED.

☒ ☐ 15. SHEET PILING WILL BE REQUIRED ON ALL EXCAVATIONS DEEPER THAN 16 FEET.

INDEX OF DRAWINGS		
SHEET NO.	DRAWING NO.	TITLE
GENERAL		
		COVER
1	G-1	INDEX
2	G-2	GENERAL NOTES AND LEGEND
3	G-3	KEY SHEET
4	G-4	KEY SHEET
CIVIL		
5	C-1	STA 0+00 to STA 4+00
6	C-2	STA 4+00 to STA 9+00
7	C-3	STA 9+00 to STA 14+00
8	C-4	STA 14+00 to STA 17+50
9	C-5	STA 17+50 to STA 22+00
10	C-6	STA 22+00 to STA 27+00
11	C-7	STA 27+00 to STA 31+00
12	C-8	STA 31+00 to STA 33+75
13	C-9	STA 33+75 to STA 37+00
14	C-10	STA 37+00 to STA 42+00
15	C-11	STA 42+00 to STA 47+00
16	C-12	STA 47+00 to STA 52+00
17	C-13	STA 52+00 to STA 57+00
18	C-14	STA 57+00 to STA 62+00
19	C-15	STA 62+00 to STA 67+00
20	C-16	STA 67+00 to STA 72+00
21	C-17	STA 72+00 to STA 77+00
22	C-18	STA 77+00 to STA 82+00
23	C-19	STA 82+00 to STA 87+00
24	C-20	STA 87+00 to STA 92+00
25	C-21	STA 92+00 to STA 97+00
26	C-22	STA 97+00 to STA 102+00
27	C-23	STA 102+00 to STA 107+00
28	C-24	STA 107+00 to STA 112+00
29	C-25	STA 112+00 to STA 117+00
30	C-26	STA 117+00 to STA 122+00
31	C-27	STA 122+00 to STA 127+00
32	C-28	STA 127+00 to STA 132+00
33	C-29	STA 132+00 to STA 136+00
34	CD-1	CIVIL DETAILS
35	CD-2	CIVIL DETAILS
36	CD-3	CIVIL DETAILS
37	CD-4	CIVIL DETAILS
38	CD-5	CIVIL DETAILS
39	CD-6	CIVIL DETAILS
40	CD-7	CIVIL DETAILS
41	CD-8	BUTCHERS PEN FM CROSSING DETAIL
TEMPORARY TRAFFIC CONTROL		
42	TTC-1	TEMPORARY TRAFFIC CONTROL PLAN
43	TTC-2	TEMPORARY TRAFFIC CONTROL PLAN
44	TTC-3	TEMPORARY TRAFFIC CONTROL PLAN
45	TTC-4	TEMPORARY TRAFFIC CONTROL PLAN
46	TTC-5	TEMPORARY TRAFFIC CONTROL PLAN
47	TTC-6	TEMPORARY TRAFFIC CONTROL PLAN
48	TTC-7	TEMPORARY TRAFFIC CONTROL PLAN
49	TTC-8	TEMPORARY TRAFFIC CONTROL PLAN
50	TTC-9	TEMPORARY TRAFFIC CONTROL PLAN
51	TTC-10	TEMPORARY TRAFFIC CONTROL PLAN
52	TTC-11	TEMPORARY TRAFFIC CONTROL PLAN
53	TTC-12	TEMPORARY TRAFFIC CONTROL PLAN
54	TTC-13	TEMPORARY TRAFFIC CONTROL PLAN
55	TTC-14	TEMPORARY TRAFFIC CONTROL PLAN
56	TTC-15	TEMPORARY TRAFFIC CONTROL PLAN
57	TTC-16	TEMPORARY TRAFFIC CONTROL PLAN
58	TTC-17	TEMPORARY TRAFFIC CONTROL PLAN
59	TTC-18	TEMPORARY TRAFFIC CONTROL PLAN
60	TTC-19	TEMPORARY TRAFFIC CONTROL PLAN
61	TTC-20	TEMPORARY TRAFFIC CONTROL PLAN
62	TTC-21	TEMPORARY TRAFFIC CONTROL PLAN
63	TTC-22	TEMPORARY TRAFFIC CONTROL PLAN
64	TTC-23	TEMPORARY TRAFFIC CONTROL PLAN
65	TTC-24	TEMPORARY TRAFFIC CONTROL PLAN
66	TTC-25	TEMPORARY TRAFFIC CONTROL NOTES
67	TTC-26	TTC - STANDARD DETAILS
68	TTC-27	TTC - STANDARD DETAILS
69	TTC-28	TTC - STANDARD DETAILS
70	TTC-29	TTC - STANDARD DETAILS
71	TTC-30	TTC - STANDARD DETAILS
72	TTC-31	TTC - STANDARD DETAILS

NOTE:

STANDARD DRAWINGS ARE APPLICABLE FOR ALL PROJECTS, INCORPORATED BY REFERENCE AND ARE AVAILABLE AT JEA.COM

THIS DOCUMENT HAS BEEN DIGITALLY SIGNED AND SEALED BY:

PRINTED COPIES OF THIS DOCUMENT ARE NOT CONSIDERED SIGNED AND SEALED. THE SIGNATURE MUST BE VERIFIED ON THE ELECTRONIC DOCUMENTS.

THE ABOVE NAMED PROFESSIONAL ENGINEER SHALL BE RESPONSIBLE FOR THE FOLLOWING SHEETS IN ACCORDANCE WITH RULE 61G15.23.004, F.A.C.

LESLIE S. SAMEL, LICENSE NO. 68763, STATE OF FLORIDA, PROFESSIONAL ENGINEER

PERMIT SUBMITTAL

Mott MacDonald Florida, LLC
10245 Centurion Parkway North
Suite 320
Jacksonville, Florida 32256
Telephone: (904) 203-1090
Architects AA - C0000035
Engineers EB - 0000155
Surveyors LB - 0006783

MOTT MACDONALD

NO.	BY	DATE	REVISIONS
6.			
5.			
4.			
3.			
2.			
1.	MM	MAR 2018	FDEP ERP & USACE Form 4345 General Permit (Butchers Pen Creek)

DESIGN ENGINEER
LESLIE S. SAMEL, P.E., BCEE
FLORIDA REGISTRATION NO.
69763

DESIGNER: B. NEU
DRAWN BY: B. LEE
DATE: MARCH 2018
CHECKED BY: P. MOURT
DATE: MARCH 2018

JEA Building Community

WEST GRID LENOX TO TIMUQUANA
FORCE MAIN IMPROVEMENTS
WILSON TO TIMUQUANA SEGMENT
INDEX

PROJ. NO. 376869
DATE: MARCH 2018
SCALE: NTS

NO. SHEETS 72
SHEET NO. 1
DRAWING NO. G-1

THE OFFICIAL RECORD OF THIS SHEET IS THE ELECTRONIC FILE DIGITALLY SIGNED AND SEALED UNDER RULE 61G15.23.004 F.A.C.

C:\pwworking\hmm\water_wastewater\lee79433\d0331267\G-1.dwg Current Layout Tab = Layout1 Wed Apr 04, 2018 - 10:53
Xrefs Attached= JEA_SHT22x34_BOR-WTS [..\d0252016\JEA_SHT22x34_BOR-WTS.dwg]

GENERAL NOTES

1. THE CONTRACTOR SHALL, CONTACT THE LOCAL PUBLIC UTILITIES (SUNSHINE STATE ONE CALL (811) LOCATING SERVICE TO LOCATE UTILITIES IN THE AREA PRIOR TO ANY EXCAVATION. ALL EXISTING UTILITIES MAY NOT BE SHOWN ON THE DRAWINGS. THE CONTRACTOR IS RESPONSIBLE FOR LOCATING AND PROTECTING EXISTING UTILITIES, WHETHER SHOWN OR NOT, AND FOR REPAIRING ALL DAMAGE TO UTILITIES.
2. DISTURBANCE SHALL BE LIMITED TO THE PERMANENT FDOT, COJ RIGHT OF WAYS, UTILITY AND TEMPORARY CONSTRUCTION EASEMENTS.
3. THE CONTRACTOR IS RESPONSIBLE FOR PROCURING ALL MOBILIZATION, STORAGE, AND STAGING AREAS AS WELL AS ACCESS TO THE CONSTRUCTION SITES WITHIN THE TEMPORARY AND PERMANENT RIGHT OF WAYS. EROSION CONTROL DEVICES AND BEST MANAGEMENT PRACTICES SHALL BE INSTALLED AND MAINTAINED AT ALL WORK SITES AND STAGING AREAS. THE CONTRACTOR SHALL FOLLOW ALL LOCAL GUIDELINES AND REGULATIONS REGARDING THE WORK, INCLUDING KEEPING MUD AND DIRT OFF PUBLIC ROADS AND PRIVATE ENTRANCES.
4. SOIL EXPLORATION WORK WAS PERFORMED BY MESKEL AND ASSOCIATES ENGINEERING, PLLC OF JACKSONVILLE, FLORIDA (MAE PROJECT NO.0103-0010). SOILS EXPLORATION WORK IS SOLELY TO ASSIST BIDDERS IN ASSESSING THE NATURE AND EXTENT OF TESTING PROCEDURES REQUIRED TO MAKE THEIR OWN DETERMINATION OF ACTUAL SUBSURFACE CONDITIONS THAT WILL BE ENCOUNTERED DURING THE COURSE OF CONSTRUCTION. NO REPRESENTATION IS MADE OR WILL BE GIVEN BY THE ENGINEER CONCERNING ACTUAL CONDITIONS THAT WILL BE ENCOUNTERED. ALL BIDDERS ARE DIRECTED PRIOR TO BIDDING TO CONDUCT ALL INVESTIGATIONS THEY DEEM NECESSARY TO ARRIVE AT THEIR OWN CONCLUSIONS REGARDING SUCH CONDITIONS.
5. ALL OPEN ENDS OF PIPE SHALL BE SECURED WATER TIGHT TO PREVENT ENTRY AT THE END OF EACH WORK DAY.
6. ALL AREAS WITH OPEN EXCAVATIONS, OPEN VAULTS OR MANHOLES, OR EQUIPMENT SHALL BE FENCED WITH SECURE TEMPORARY FENCING AT LEAST FOUR FEET HIGH OR CLOSED AT THE END OF EACH WORK DAY.
7. THE CONTRACTOR SHALL BE RESPONSIBLE FOR ANY WASTEWATER SPILLS THAT OCCUR DURING CONSTRUCTION AND FOR THE ASSOCIATED FINES BROUGHT FORTH FROM FEDERAL, STATE, OR LOCAL REGULATORY AGENCIES. THE CONTRACTOR IS REQUIRED TO HAVE PUMPS AVAILABLE AT ALL TIMES ALL TIMES IN CASE OF ACCIDENTAL SPILL OR EXISTING SEWER DAMAGE. THE CONTRACTOR SHALL NOTIFY JEA IMMEDIATELY IN THE CASE OF A SPILL.
8. ANY PUBLIC LAND CORNER, PROPERTY MONUMENTATION, OR BENCH MARK WITHIN THE LIMITS OF CONSTRUCTION SHALL BE PROTECTED. IF A MONUMENT IS IN DANGER OF BEING DESTROYED, THE CONTRACTOR SHALL NOTIFY THE ENGINEER IMMEDIATELY. ANY CORNER MONUMENT DISTURBED OR DESTROYED SHALL BE RESET BY A PROFESSIONAL LAND SURVEYOR LICENSED IN THE STATE OF FLORIDA AT NO ADDITIONAL COST TO THE OWNER.
9. THE CONTRACTOR SHALL CONTACT THE ENGINEER OR OWNER IMMEDIATELY SHOULD ANY ISSUE BETWEEN CONSTRUCTION AND THE DRAWINGS ARISE. THE CONTRACTOR SHALL ADHERE TO ALL CONDITIONS AND REQUIREMENTS OF ALL PERMITS THAT HAVE BEEN OBTAINED.
10. FOR ALL TIE-IN PIPING, CROSSINGS, OR VALVES THE CONTRACTOR SHALL VERIFY ALL EXISTING PIPELINE ELEVATIONS, LOCATIONS, DIAMETERS, AND MATERIALS PRIOR TO SHOP DRAWING SUBMITTALS, NOTIFYING THE ENGINEER OF ANY CONFLICTS.
11. ANY CONSTRUCTION IN COJ RIGHT OF WAY WILL REQUIRE A RIGHT OF WAY PERMIT. THE CONTRACTOR IS RESPONSIBLE FOR CALLING 904-255-8366 DAILY FROM 7:30 A.M. TO 8:30 A.M., WHEN WORKING IN THE COJ RIGHT OF WAY.
12. ALL DRIVEWAYS, DRAINAGE PIPES, AND HEADWALLS SHALL BE RESTORED TO EQUAL OR BETTER THAN EXISTING CONDITION. IN BOTH NEW AND EXISTING RIGHT OF WAYS AND WITHIN ANY TEMPORARY EASEMENT AREAS. ANY STRUCTURES OR DRIVEWAYS DISTURBED OUTSIDE OF THE RIGHT OF WAY SHALL BE FULLY RESTORED AT NO COST TO THE PROPERTY OWNER OR OWNERS.
13. THE CONTRACTOR SHALL LOCATE AND PROTECT ALL WATER AND SEWER LATERALS SERVICING RESIDENTS AND BUSINESSES THROUGHOUT CONSTRUCTION.
14. WHEN EXCAVATED MATERIALS ARE PLACED ON ROADWAY SURFACES THE CONTRACTOR SHALL PLACE SAND OR STONE SCREENING UNDERNEATH THE EXCAVATED MATERIALS AND SHALL REMOVE SAID MATERIALS AND WASH ALL RESIDUES FROM THE SURFACES DAILY.
15. THE CONTRACTOR SHALL PROVIDE AN ACCESS CORRIDOR FOR EMERGENCY SERVICES AT ALL TIMES.
16. THE CONTRACTOR SHALL PROVIDE 24 HOURS' NOTICE TO FLORIDA GAS TRANSMISSION PRIOR TO WORK WHICH MAY IMPACT ITS GAS MAINS.
17. THE CONTRACTOR IS RESPONSIBLE FOR MAINTAINING THE CLEAN AND EFFICIENT OPERATIONS OF ALL STORM WATER CONVEYANCE STRUCTURES IN THE AREA IMPACTED BY CONSTRUCTION. THE CONTRACTOR SHALL ENSURE THAT THE CONVEYANCE CAPACITY OF THE STORM WATER INFRASTRUCTURE IS MAINTAINED TO AVOID FLOODING. THE CONTRACTOR SHALL INSTALL STABILIZED CONSTRUCTION ENTRANCES AS DIRECTED BY THE ENGINEER AT LOCATIONS WHERE VEHICULAR TRAFFIC PASSES FROM DISTURBED AREAS TO UNDISTURBED AREAS. THE CONTRACTOR SHALL IMPLEMENT THE EROSION AND SEDIMENT CONTROL MEASURES DESIGNATED BY THE ENGINEER.
18. THE CONTRACTOR SHALL MINIMIZE TEMPORARY IMPACTS TO ANY AND ALL ENVIRONMENTALLY SENSITIVE AREAS. THE CONTRACTOR SHALL COMPLY WITH ALL DIRECTION AND PERMITTING THE FROM LOCAL, STATE, AND GOVERNMENT AGENCIES WHEN WORKING IN SUCH AREAS.
19. ANY IMPACTS TO WETLANDS AND WATERS OF THE U.S. SHALL BE PERMITTED BY APPROPRIATE LOCAL, STATE, AND FEDERAL AGENCIES.
20. ALL DRAINAGE DITCHES SHALL BE RESTORED TO THE EXISTING CROSS SECTION UPON COMPLETION OF CONSTRUCTION DISTURBANCE. EROSION CONTROL FOR DISTURBED DITCHES WILL BE REQUIRED UNTIL VEGETATION, EQUAL TO ADJACENT AREAS, HAS BEEN RESTORED. EROSION CONTROL METHODS WILL BE CONSISTENT WITH THE STATE OF FLORIDA EROSION AND SEDIMENT CONTROL MANUAL, LATEST EDITION. THE CONTRACTOR SHALL USE ROLLED EROSION CONTROLLED PRODUCTS (RECP) TO TEMPORARILY AND PERMANENTLY STABILIZE DITCH BOTTOMS AT ALL DITCH CROSSINGS. SPECIFICALLY, AN EROSION CONTROL BLANKET OR TURF REINFORCEMENT MAT WILL BE REQUIRED. RICP's SHALL BE INSTALLED PER MANUFACTURERS SPECIFICATIONS. CONTRACTOR IS REQUIRED TO MAINTAIN WET SEASON DRAINAGE CONVEYANCE WITHIN THE PROJECT AREA. CARE SHALL BE TAKEN TO MAINTAIN FLOW WITHIN THE EXISTING DITCH SYSTEMS DURING AND AFTER RAINFALL EVENTS.
21. THE CONTRACTOR SHALL BE RESPONSIBLE FOR ALL STORM WATER RUNOFF CONTROL AND FILTRATION VIA USING BEST MANAGEMENT PRACTICES AS PROVIDED BY THE ENGINEER (SEE SHEET CD-5 AND NPDES PERMIT) .THE CONTRACTOR SHALL REFERENCE THE STORM WATER POLLUTION PREVENTION PLAN (SWPPP) FOR ALL SUCH INSTANCES.
22. THE CONTRACTOR SHALL IMPLEMENT ONLY MAINTENANCE OF TRAFFIC SPECIFIED BY THE ENGINEER AND APPROVED BY THE CITY OF JACKSONVILLE AND FDOT.
23. THE CONTRACTOR SHALL PROVIDE THE OWNER WITH ITS TWO WEEK FORWARD PROJECT SCHEDULE AT LEAST ONE WEEK PRIOR TO IMPLEMENTATION. THE CONTRACTOR SHALL PROVIDE THE OWNER WITH ANY CHANGE/MODIFICATION TO THE PROJECT SCHEDULE WITHIN 24 HOURS.
24. LIMITS OF DISTURBANCE WITHIN THE UTILITY AND TEMPORARY CONSTRUCTION EASEMENTS SHALL BE LIMITED TO THE AREAS OUTLINED BY SILT FENCE ON THE DRAWINGS.
25. RESTORATION WORK WITHIN UTILITY AND TEMPORARY CONSTRUCTION EASEMENTS SHALL BE AS SHOWN ON THE DRAWINGS AS WELL AS SEEDING AS PER SHEET CD-5.
26. CONTRACTOR SHALL HAVE A LICENSED LAND SURVEYOR/MAPPER FIELD LAYOUT AND STAKE ALL PERMANENT AND TEMPORARY EASEMENTS PRIOR TO THE START OF CONSTRUCTION.
27. JEA WATER AND WASTEWATER STANDARDS SECTIONS 350 AND 429 III.3.1: THE MAXIMUM JOINT DEFLECTION SHALL BE LIMITED TO 80% OF THE PIPE MANUFACTURER'S RECOMMENDATIONS.

CITY OF JACKSONVILLE (COJ) EROSION CONTROL NOTES

1. CAUTION: ALL UTILITY LOCATIONS ARE APPROXIMATE AND MUST BE LOCATED PRIOR TO CONSTRUCTION.
2. VEGETATION CLEARING WILL BE KEPT TO THE ABSOLUTE MINIMUM NECESSARY FOR CONSTRUCTION.
3. MATERIAL RESULTING FROM EXCAVATION WILL NOT BE PLACED IN SUCH A MANNER THAT IT IS DISPERSED BY CURRENT OR OTHER FORCES. THE MATERIAL SHOULD BE COLLECTED AND CONTAINED AT ONE SITE AS APPROPRIATE.
4. HEAVY EQUIPMENT WORKING IN WETLANDS WILL BE PLACED ON MATS OR LOW GROUND PRESSURE EQUIPMENT USED DURING CONSTRUCTION TO LIMIT SOIL DISTURBANCE TO THE MINIMUM AREA REQUIRED TO INSTALL THE UTILITY.
5. NO STAGING AREAS OR TEMPORARY ACCESS ROADS WILL BE PLACED IN WETLANDS
6. APPROPRIATE SILTATION AND EROSION CONTROLS WILL BE USED AND MAINTAINED IN EFFECTIVE OPERATING CONDITION DURING CONSTRUCTION, AND ALL EXPOSED SOIL AND FILLS WILL BE PERMANENTLY STABILIZED AT THE EARLIEST PRACTICABLE DATE.
7. SEDIMENT CONTROL FENCE (SILT FENCE) SHOULD BE INSTALLED AND MAINTAINED FOR THE DURATION OF THE CONSTRUCTION. SILT FENCE WILL BE INSTALLED ALONG AND WITHIN THE RIGHT-OF-WAY LINE (AT LEAST 12 FT. AWAY FROM THE EDGE OF THE RIGHT-OF-WAY), IF A BODY OF WATER OR POTENTIAL WETLAND IS LOCATED WITHIN 60 FT. FROM THE EDGE OF THE RIGHT-OF-WAY. ANY OTHER SITUATIONS WILL BE APPROVED BY ENGINEER.
8. WHEN CONSTRUCTING IN WETLANDS, THE TOP 6 TO 12 INCHES OF THE TRENCH WILL BE BACK FILLED WITH TOP SOIL FROM THE TRENCH.
9. EXCESS MATERIAL WILL BE REMOVED FROM THE WETLAND AND PLACE ON UPLAND AREAS IMMEDIATELY UPON COMPLETION OF CONSTRUCTION.
10. EXPOSED SLOPES OF STREAM BANKS WILL BE RESTORED TO THEIR ORIGINAL CONTOURS AND STABILIZED IMMEDIATELY UPON COMPLETION OF CONSTRUCTION.
11. ANY TEMPORARY FILLS MUST BE REMOVED IN THEIR ENTIRETY AND THE AFFECTED AREAS RETURNED TO THEIR PRE-EXISTING ELEVATION.
12. ANY DISTURBED AREA WILL BE RESEEDED WITH NATIVE GRASS SEED, AND SEDIMENT CONTROL FENCE SHOULD BE REMOVED IMMEDIATELY UPON COMPLETION OF CONSTRUCTION.
13. WHEN CONSTRUCTING IN COJ LIMITS, ALL ROADWAY DRAINS, SUCH AS INLETS NEAR CURBS OR DROP INLETS ON ROADWAYS WHICH ARE LOCATED WITHIN THE RIGHT-OF-WAY, SHALL BE PROTECTED WITH TYPICAL INLET SEDIMENT FILTERS. THESE FILTERS WILL BE REMOVED IMMEDIATELY UPON COMPLETION OF CONSTRUCTION.
14. ALL CABLE MARKERS TO BE PLACED AS FAR BACK TO RIGHT-OF-WAY LINE AS POSSIBLE.
15. DRAWING DISCLAIMER: FACILITY LOCATIONS ARE GENERAL IN NATURE. ENGINEER WILL NOT BE HELD ACCOUNTABLE FOR THE ACCURACY OF THE INFORMATION PROVIDED ON THESE DRAWINGS. CONTRACTOR MUST LOCATE ALL UTILITIES PRIOR TO CONSTRUCTION.

ABBREVIATIONS:

AC	ASBESTOS CEMENT
AG	ALLEY GRATE
BL	BASE LINE
BM	BENCH MARK
BC	BOTTOM OF CURVE
CB	CATCH BASIN
CI	CAST IRON
CL	CENTER LINE
CEP	CITY ELECTRIC POLE
CONC	CONCRETE
CONST	CONSTRUCTION
CMP	CORRUGATED METAL PIPE
CMPA	CORRUGATED METAL PIPE ARCH
CPP	CONCRETE POWER POLE
CULV	CULVERT
C&G	CURB & GUTTER
C	CUT
COJ	CITY OF JACKSONVILLE
DBI	DITCH BOTTOM INVERT
DW OR DR	DRIVEWAY
DI	DUCTILE IRON
EOP	EDGE OF PAVEMENT
ELEV	ELEVATION
ERCP	ELLIPTICAL REINFORCED CONC PIPE
EXP JT	EXPANSION JOINT
F	FILL
FH	FIRE HYDRANT
FL	FLOW LINE
FM	FORCE MAIN
GALV/GLV	GALVANIZED
G	GAS LINE
GV	GAS VALVE
HDPE	HIGH DENSITY POLYETHYLENE PIPE
HW	HEAD WALL
HC	HIGH CURB
INT	INTERSECTION
INV	INVERT
IP	IRON PIPE
JWW	JACKSONVILLE WATER WORKS
LT	LEFT
MB	MAIL BOX
MH	MANHOLE
NTS	NOT TO SCALE
OE	OVERHEAD ELECTRIC
OT	OVERHEAD TELEPHONE
POL	POINT ON LINE
PRM	PERMANENT REFERENCE MONUMENT
PVC	POLYVINYL CHLORIDE
r	RADIUS
R	RATE
RCP	REINFORCED CONCRETE PIPE
RT	RIGHT
R/W	RIGHT OF WAY
RD	ROOF DRAIN
S/W	SIDE WALK
SBT	SOUTHERN BELL TELEPHONE
STA	STATION
TCP	TERRA COTTA PIPE
TOP	TOP OF PIPE
UGE	UNDERGROUND ELECTRIC
UGT	UNDERGROUND TELEPHONE
USC & GS	UNITED STATES COASTAL & GEODETIC SURVEY
VC	VITRIFIED CLAY
WM	WATER METER
WV	WATER VALVE
WLP	WOOD LIGHT POLE
WPP	WOOD POWER POLE
WTP	WOOD TELEPHONE POLE

GENERAL LEGEND

	EXISTING	PROPOSED
RIGHT OF WAY LINE		
CENTER LINE		
LIMITS OF CONSTRUCTION		L.O.C.
FENCE (HEIGHT & MAT'L. INDICATED)	X 6' CHAIN LINK X	X 6' CHAIN LINK X
DITCH OR SWALE		
DRAIN PIPE	D D	
CATCH BASIN		
STORM DRAIN GRATE		
STORM SEWER (SIZE & MAT'L. INDICATED)	24" RCP	24" RCP
STORM SEWER, REPLACEMENT (IN CASE 10 TRENCH) SIZE, MAT'L. INDICATED		
STORM SEWER (SIZE & MAT'L. INDICATED)		
CULVERT W/ENDWALLS (SIZE & MAT'L. INDICATED)	18" CMP	18" CMP
WATER MAIN SIZE, TYPE INDICATED	W 6" W PVC	
WATER MAIN (IN CASE 10 TRENCH) SIZE, TYPE INDICATED		
GRAVITY SEWER SIZE, TYPE INDICATED	S 8" S PVC	
SEWER FORCE MAIN SIZE, TYPE INDICATED	10" PVC	
LINE VALVE		
AIR RELEASE VALVE		ARV
FIRE HYDRANT		
VALVE (TYPE INDICATED)		
END CAP		
PLUG (AT END OF LINE)		
VALVE (TYPE INDICATED)		
REDUCER		
FIRE HYDRANT		
HOUSE CONNECTION (SEWER)	HC	1275 NHC
SPOT ELEVATION	× (100.00) OR × 100.00	
MANHOLE - TYPE (IF INDICATED) E - ELECTRIC S - SANITARY D - STORM T - TELEPHONE		MH1
CLEAN OUT	C.O.	
SPRINKLER HEAD	SPR	
TEMPORARY SAMPLING/TEST TAP POINT (BACTERIOLOGICAL SAMPLING POINT)		SAMPLE TAP NO. TAP NO.
SILT HAY BARRIER		
SIDEWALK		
SILT FENCE (SE/SC)		
CONSTRUCTION SAFETY FENCE		
TEMPORARY CONSTRUCTION EASEMENT		TCE
PERMANENT EASEMENT		

UTILITY SYMBOLS

ELECTRIC POLE OR S.B.T. POLE (WOOD)	PP OR PP (WITH LIGHT)
WOOD POWER POLE	WPP
ELECTRIC POLE OR S.B.T. POLE (CONC.)	PP OR PP (WITH LIGHT)
CONCRETE POWER POLE	CPP
GUY WIRE	
TRAFFIC SIGNAL POLE	TS
IRON PIPE	I.P.
OVERHEAD ELECTRIC	OHE
UNDERGROUND ELECTRIC	UGE
OVERHEAD TELEPHONE	OT
UNDERGROUND TELEPHONE	UGT
GAS MAIN (SIZE & MAT'L. INDICATED)	GAS
CABLE TELEVISION	CATV
FIBER OPTIC LINE	FO
UNDERGROUND CABLE (TYPE UNDETERMINED)	UG UG
WATER METER	WM
WATER METER WITH TOUCHREAD	WM(TR)
TELEPHONE BOX	T
CATV BOX	CATV
CONCRETE MONUMENT	CM
GAS VALVE	
SOIL BORING (NUMBER INDICATED)	B-XX
SOFT DIG (NUMBER INDICATED)	SD-XX
ASPHALT OR CONCRETE CORE SAMPLE (NUMBER INDICATED)	A-XX
GROUND MONITORING WELL	GW-XX
TREE, SIZE & TYPE INDICATED	12" O
MAIL BOX	MB
SIGN - TYPE INDICATED	OR SIGN
BUSH, SHRUB OR HEDGE	SHRUB
FULL DEPTH ASPHALT PAVEMENT REPLACEMENT	
ASPHALT OR CONCRETE PAVEMENT REMOVAL AND OVERLAY (COJ)	
ASPHALT OR CONCRETE PAVEMENT REMOVAL AND OVERLAY (FDOT)	
CONFIRMED GOPHER TORTOISE BURROW	
CONFIRMED GOPHER TORTOISE HABITAT AREA	
DELINEATED WELANDS	
TURBIDITY CURTAIN	
SILT FENCE	
LIMITS OF WETLAND DISTURBANCE	

DETAIL LETTER — A
SHEET NUMBER — CD-1

PERMIT SUBMITTAL

Mott MacDonald Florida, LLC
10245 Centurion Parkway North
Suite 320
Jacksonville, Florida 32256
Telephone: (904) 203-1090
Architects AA - C0000035
Engineers EB - 0000155
Surveyors LB - 0006783
MOTT MACDONALD

NO.	BY	DATE	REVISIONS
6.			
5.			
4.			
3.			
2.			
1.	MM	MAR 2018	FDEP ERP & USACE Form 4345 General Permit (Butchers Pen Creek)

DESIGN ENGINEER
LESLIE S. SAMEL, P.E., BCEE
FLORIDA REGISTRATION NO. 68763

DESIGNER: B. NEU
DRAWN BY: B. LEE
DATE: MARCH 2018
CHECKED BY: P. MOURT
DATE: MARCH 2018

JEA Building Community

WEST GRID LENOX TO TIMUQUANA
FORCE MAIN IMPROVEMENTS
WILSON TO TIMUQUANA SEGMENT
GENERAL NOTES AND LEGEND

PROJ. NO. 376869
DATE: MARCH 2018
SCALE: NTS

NO. SHEETS 72
SHEET NO. 2
DRAWING NO. G-2

THE OFFICIAL RECORD OF THIS SHEET IS THE ELECTRONIC FILE DIGITALLY SIGNED AND SEALED UNDER RULE 61G15.23.004 F.A.C.

Xrefs Attached= JEA_SHT22x34_BOR-WTS [..\d0252016\JEA_SHT22x34_BOR-WTS.dwg]
C:\pwworking\hmm\water_wastewater\lee79433\d0331267\G-2.dwg Current Layout Tab = Layout1 Wed Apr 04, 2018 - 11:56

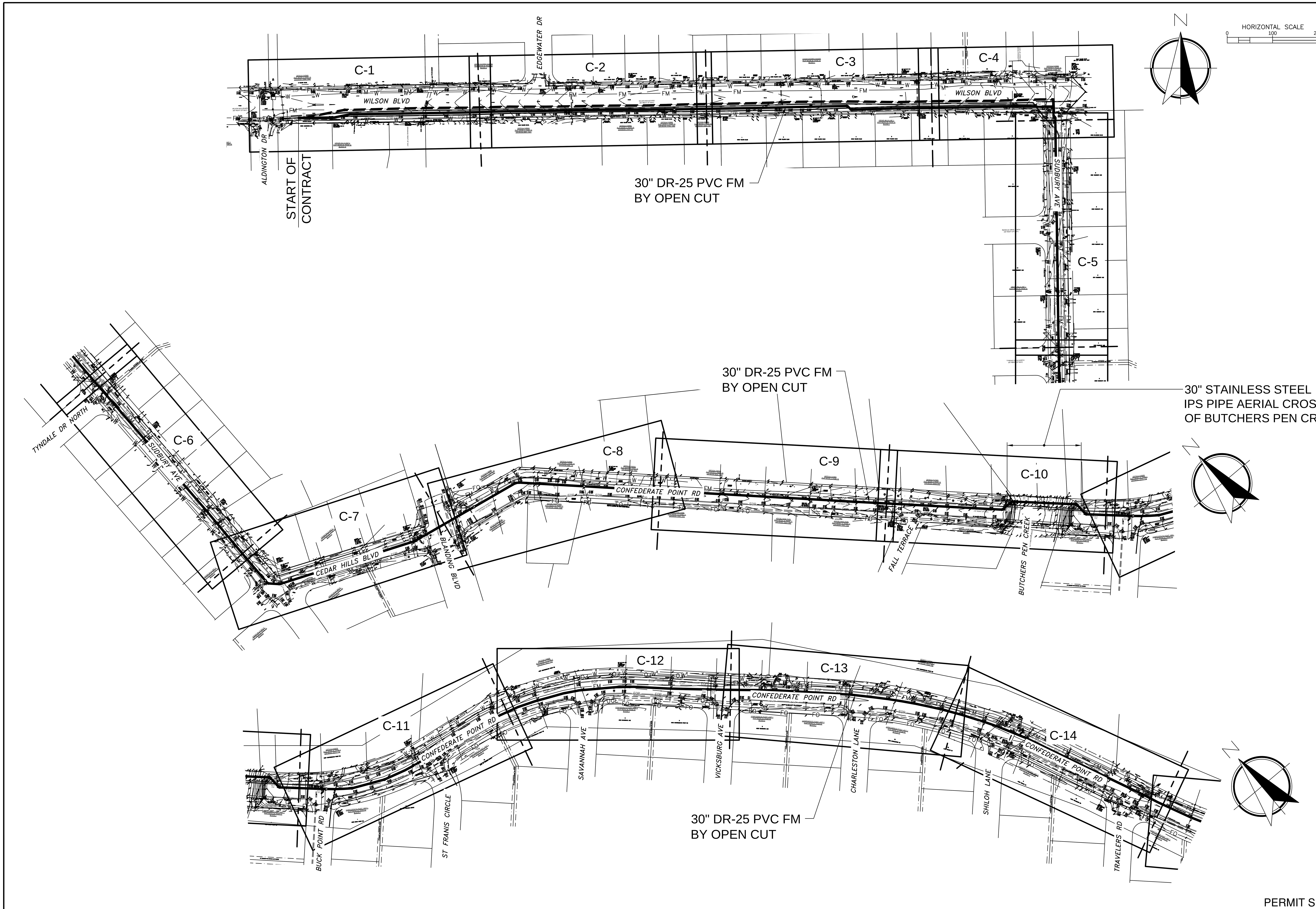

PERMIT SUBMITTAL

Mott MacDonald Florida, LLC
10245 Centurion Parkway North
Suite 320
Jacksonville, Florida 32256
Telephone: (904) 203-1090
Architects AA - C0000035
Engineers EB - 0000155
Surveyors LB - 0006783

MOTT MACDONALD

REVISIONS

NO.	BY	DATE	
6.			
5.			
4.			
3.			
2.			
1.	MM	MAR 2018	FDEP ERP & USACE Form 4345 General Permit (Butchers Pen Creek)

DESIGN ENGINEER
LESLIE S. SAMEL, P.E., BCEE
FLORIDA REGISTRATION NO.
68763

DESIGNER:	B. NEU
DRAWN BY:	B. LEE
DATE:	MARCH 2018
CHECKED BY:	P. MOURT
DATE:	MARCH 2018

JEA Building Community

WEST GRID LENOX TO TIMUQUANA FORCE MAIN IMPROVEMENTS WILSON TO TIMUQUANA SEGMENT
KEY SHEET

PROJ. NO. 376869
DATE: MARCH 2018
SCALE: NTS

NO. SHEETS 72
SHEET NO. 3
DRAWING NO. G-3

THE OFFICIAL RECORD OF THIS SHEET IS THE ELECTRONIC FILE DIGITALLY SIGNED AND SEALED UNDER RULE 61G15.23.004 F.A.C.

Xrefs Attached= XCNSTPLN [..\d0252014\XCNSTPLN.dwg]
XCSTEPLN [..\d0252014\XCSTEPLN.dwg]
JEA_SHT22x34_BOR-WTS [..\d0252016\JEA_SHT22x34_BOR-WTS.dwg]
C:\pwworking\hmm\water_wastewater\lee79433\d0331267\G-3.dwg Current Layout Tab = Layout1 Wed Apr 04, 2018 - 11:56

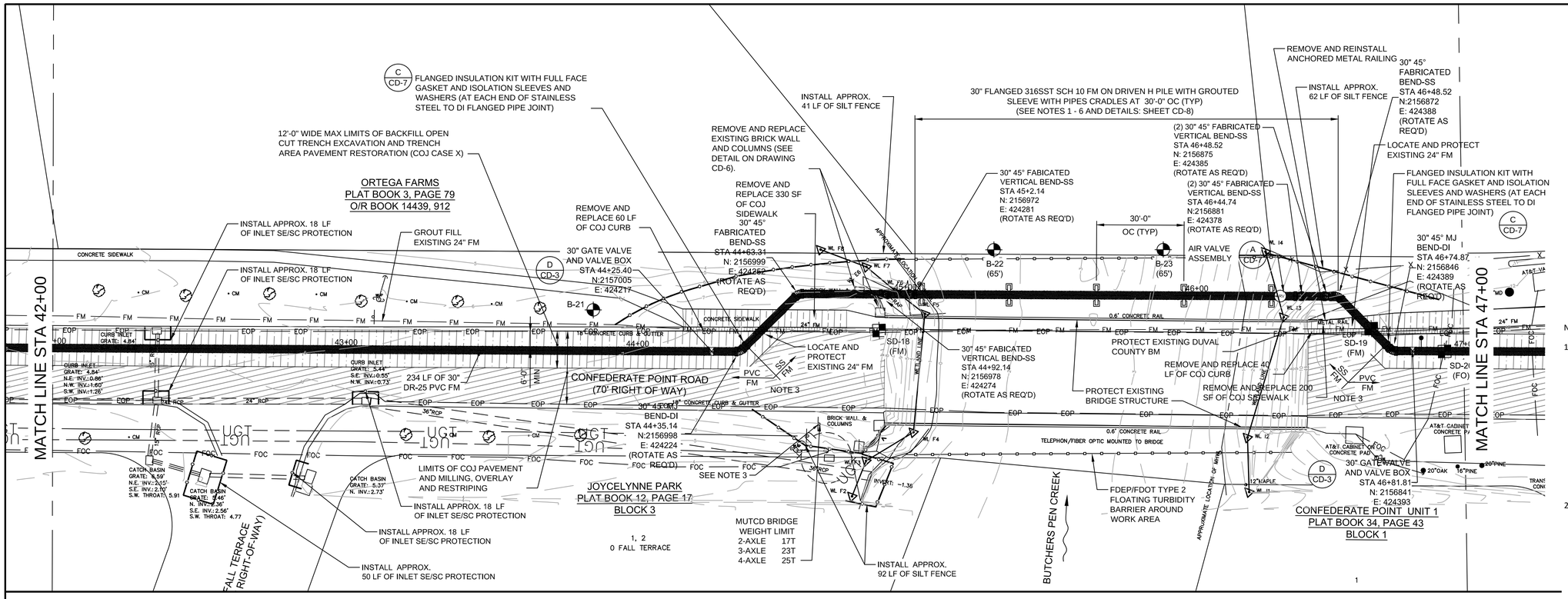

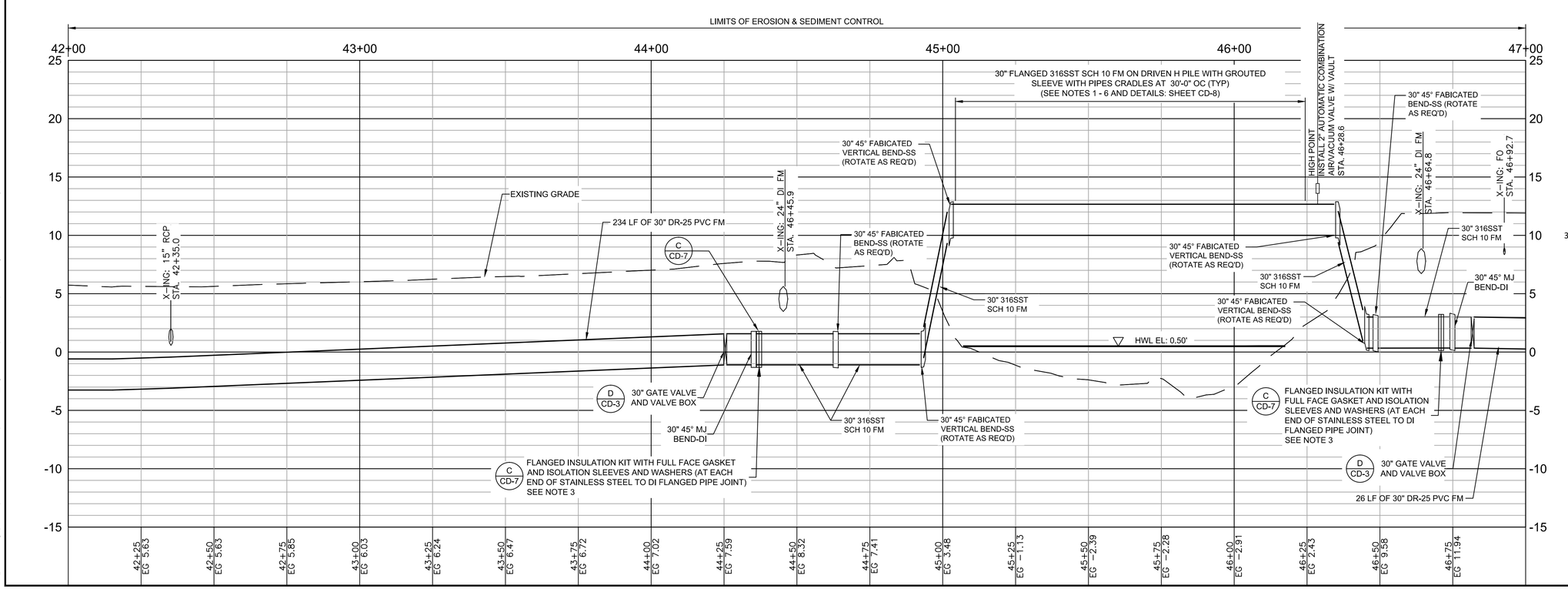

HORZ SCALE: 1" = 20 FT. (22x34)
1" = 10 FT. (11x17)

VERT SCALE: 1" = 5 FT. (22x34)
1" = 10 FT. (11x17)

NOTES:

1. THE CONTRACTOR SHALL NOTIFY THE USCG SECTOR JACKSONVILLE-WATERWAYS MANAGEMENT OFFICE AT LEAST 30 DAYS PRIOR TO ANY CONSTRUCTION IN OR OVER BUTCHERS PEN AND FISHING CREEKS

   Lt. Allan Storm
   USCG Sector Jacksonville
   Waterways Management Office
   10426 Alta Drive
   Jacksonville, FL 32226

   Rory C. Boyle, MST3
   Rory.C.Boyle@uscg.mil
   904.717.7648

2. THE CONTRACTOR SHALL NOTIFY JTA AT LEAST 14 BUSINESS DAYS PRIOR TO WORK NEAR A JTA BUS STOP FOR THE BUS STOP SIGN TO BE TEMPORARILY REMOVED BY JTA OR A JTA APPROVED CONTRACTOR. THE REMOVAL AND REINSTALLATION OF ANY JTA SIGNS SHALL BE COMPLETED BY JTA AT THE CONTRACTOR'S EXPENSE. THE CONTRACTOR WILL NOTIFY JTA WHEN THE BUS STOP IS RESTORED AND AVAILABLE FOR BUS STOP SIGN REINSTALLATION. CONTRACTOR SHALL COORDINATE WITH THE JTA FOR THE LOCATION AND CONSTRUCTION OF A TEMPORARY BUS STOP TO SERVE EACH LOCATION. THE TEMPORARY BUS STOP SHALL BE CONSTRUCTED ON A SOLID SURFACE, GRADED TO PREVENT FLOODING. THE CONTRACTOR SHALL ALSO PROVIDE APPROPRIATE SIGNAGE AS DETERMINED BY JTA TO NOTIFY CUSTOMERS OF THE TEMPORARY BUS TERMINAL'S LOCATION

   JACKSONVILLE TRANSPORTATION AUTHORITY
   121 WEST FORSYTH STREET
   JACKSONVILLE, FLORIDA 32202

   IVAN MITCHELL
   (904) 633-8523 (DIRECT)
   imitchell@jtafla.com

   ANGIE WILLIAMS
   (904) 632-5230
   ADWilliams@jtafla.com

3. LIMIT OF LUMP SUM BUTCHERS PEN CREEK CROSSING ITEM OF WORK

PERMIT SUBMITTAL

Mott MacDonald Florida, LLC
10245 Centurion Parkway North
Suite 320
Jacksonville, Florida 32256
Telephone: (904) 363-1200
Architects AA - C000035
Engineers EB - 0000035
Surveyors LB - 0006783
MOTT MACDONALD

NO.	BY	DATE	REVISIONS
6.			
5.			
4.			
3.			
2.			
1.	MM	MAR 2018	FDOP EPP & USACE Form 4345 General Permit (Butchers Pen Creek)

DESIGN ENGINEER: LESLIE S. SAMEL, P.E., BCEE
FLORIDA REGISTRATION NO. 68763

DESIGNER:	B. NEU	
DRAWN BY:	-	
DATE:	MARCH 2018	
CHECKED BY:	L. SAMEL	
DATE:	MARCH 2018	

JEA Building Community

WEST GRID LENOX TO TIMUQUANA
FORCE MAIN IMPROVEMENTS
WILSON TO TIMUQUANA SEGMENT
STA 42+00 TO STA 47+00

PROJ. NO. 378869		
DATE:	MARCH 2018	
SCALE:	1" = 20' 1" = 5'	

NO. SHEETS 72	SHEET NO. 15	DRAWING NO. C-11

THE OFFICIAL RECORD OF THIS SHEET IS THE ELECTRONIC FILE DIGITALLY SIGNED AND SEALED UNDER RULE 61G15.23.004 F.A.C.

C:\pwworking\hmm\water_wastewater\mottmac_nju85083\d0331269\C-11.dwg Current Layout Tab = C-11 Wed Apr 04, 2018 - 11:32
Xrefs Attached= JEA_SHT22x34_BOR-WTS [..\d0252016\JEA_SHT22x34_BOR-WTS.dwg]
378869_WTS-FM-DRef [..\d0339050\378869_WTS-FM-DRef.dwg]
XCNSTPLN_WTS [..\d0339050\XCNSTPLN_WTS.dwg]
XCSTEPLN_WTS [..\d0339050\XCSTEPLN_WTS.dwg]

GENERAL NOTES FOR SOIL EROSION, SEDIMENT CONTROL, AND TREE PROTECTION:

1. ALL EROSION AND SEDIMENT CONTROL PRACTICES TO BE INSTALLED PRIOR TO ANY MAJOR SOIL DISTURBANCE, OR IN THEIR PROPER SEQUENCE, AND MAINTAINED UNTIL PERMANENT PROTECTION IS ESTABLISHED.
2. ANY DISTURBED AREAS THAT WILL BE LEFT EXPOSED MORE THAN 30 DAYS, AND NOT SUBJECT TO CONSTRUCTION TRAFFIC, WILL IMMEDIATELY RECEIVE A TEMPORARY SEEDING. IF THE SEASON PREVENTS THE ESTABLISHMENT OF A TEMPORARY COVER, THE DISTURBED AREAS WILL BE MULCHED WITH STRAW, OR EQUIVALENT MATERIAL, AT A RATE OF TWO (2) TONS PER ACRE, ACCORDING TO STATE STANDARDS.
3. PERMANENT VEGETATION TO BE SEEDED OR SODDED ON ALL EXPOSED AREAS WITHIN TEN (10) DAYS AFTER GRADING. MULCH TO BE USED AS NECESSARY FOR PROTECTION UNTIL SEEDING IS ESTABLISHED.
4. ALL WORK AND MATERIALS TO BE IN ACCORDANCE WITH THE FDOT "STANDARD SPECIFICATIONS FOR ROAD AND BRIDGE CONSTRUCTION", LATEST EDITION, SECTIONS 104, 570, 575 AND 980 TO 986.
5. UNFILTERED DEWATERING IS NOT PERMITTED. THE CONTRACTOR SHALL TAKE ALL NECESSARY PRECAUTIONS DURING ALL DEWATERING OPERATIONS TO MINIMIZE SEDIMENT TRANSFER.
6. SHOULD THE CONTROL OF DUST AT THE SITE BE NECESSARY, THE SITE WILL BE SPRINKLED UNTIL THE SURFACE IS WET, TEMPORARY VEGETATION COVER SHALL BE ESTABLISHED OR MULCH SHALL BE APPLIED IN ACCORDANCE WITH STATE STANDARDS FOR EROSION CONTROL.
7. ALL SOIL WASHED, DROPPED, SPILLED OR TRACKED OUTSIDE THE LIMIT OF DISTURBANCE OR ONTO PUBLIC RIGHTS-OF-WAY WILL BE REMOVED IMMEDIATELY.
8. ANY AREAS USED FOR THE CONTRACTOR'S STAGING, INCLUDING BUT NOT LIMITED TO, TEMPORARY STORAGE OF STOCKPILED MATERIALS (E.G. CRUSHED STONE, QUARRY PROCESS STONE, SELECT FILL, EXCAVATED MATERIALS, ETC.), SHALL BE ENTIRELY PROTECTED BY A SILT FENCE ALONG THE LOW ELEVATION SIDE TO CONTROL SEDIMENT RUNOFF.
9. ADDITIONAL SEDIMENT AND EROSION CONTROL MEASURES MAY BE REQUIRED, DURING ANY PHASE OF DEVELOPMENT, AT THE DISCRETION OF THE JEA APPOINTED CONSTRUCTION INSPECTOR.
10. THE CONTRACTOR SHALL ENSURE THAT A FOREMAN OR SUPERVISOR WHO HAS BEEN CERTIFIED UNDER THE FLORIDA STORMWATER, EROSION, AND SEDIMENT CONTROL INSPECTOR TRAINING PROGRAM IS AVAILABLE IN PERSON OR BY PHONE AT ALL TIMES DURING THE CONSTRUCTION ACTIVITIES. THIS INDIVIDUAL MUST BE DESIGNATED AT THE PRE-CONSTRUCTION MEETING AND MUST BE PRESENT AT THE MEETING.
11. THE EROSION AND SEDIMENTATION CONTROLS SHOWN ON THE PLANS ARE THE MINIMUM REQUIRED. ADDITIONAL SEDIMENT AND EROSION CONTROL MEASURES MAY BE REQUIRED, DURING ANY PHASE OF DEVELOPMENT, AT THE DISCRETION OF THE JEA APPOINTED CONSTRUCTION INSPECTOR.
12. EROSION CONTROL MEASURES DEPICTED IN THE PLANS ARE LIMITED TO INLET PROTECTION AND SILT FENCES. THE INLET PROTECTION SHALL BE LIMITED TO INLETS WITHIN THE ACTIVE CONSTRUCTION LIMITS AND A MINIMUM OF TWO INLETS DOWNSTREAM OF THE ACTIVE CONSTRUCTION LIMITS. THE CONTRACTOR SHALL MONITOR THE EFFECTIVENESS OF SUCH INLET PROTECTION AND PROVIDE ADDITIONAL PROTECTION IF WARRANTED. NO SEDIMENTS ARE INTENDED TO ENTER THE CURB INLETS. THE CONTRACTOR SHALL CONDUCT AND MAINTAIN THE WORK IN SUCH CONDITION TO PROVIDE ADEQUATE DRAINAGE AT ALL TIMES AND SHALL MONITOR THE PERFORMANCE OF THE STORM WATER INLETS WHILE IMPEDED BY THE INLET PROTECTION. STREET FLOODING IS NOT TO BE INTRODUCED AS A RESULT OF THE INLET PROTECTION. SAFETY OF THE TRAVELING PUBLIC, AS RELATED TO THE ADEQUACY OF THE DRIVING SURFACE AS A RESULT OF STANDING STORMWATER RUNOFF CREATED BY THE INTRODUCTION OF INLET PROTECTION, IS THE RESPONSIBILITY OF THE CONTRACTOR.
13. IT IS THE CONTRACTOR'S RESPONSIBILITY TO MAINTAIN A CLEAN WORK ZONE TO LIMIT THE RELEASE OF SEDIMENTS INTO STORMWATER COLLECTION SYSTEMS AND TO LIMIT THE TRACKING OF MATERIALS BEYOND THE ACTIVE WORK LIMITS. THE CONTRACTOR IS REQUIRED TO MECHANICALLY SWEEP THE ACTIVE CONSTRUCTION LIMITS A MINIMUM OF ONCE WEEKLY. SUCH SWEEPING SHALL BE COMPLETED TO REMOVE SEDIMENTS AND LIKE MATERIALS FROM THE CORRIDOR. MANUAL SWEEPING IS REQUIRED AT THE END OF EACH WORKDAY. ADDITIONAL OR MORE FREQUENT SWEEPING MAY BE REQUIRED BY THE JEA APPOINTED CONSTRUCTION INSPECTOR.
14. THE CONTRACTOR IS RESPONSIBLE FOR THE PROTECTION OF ALL TREES AND LANDSCAPING ON ADJACENT PROPERTIES, AND WILL BE SOLELY LIABLE FOR DAMAGE TO VEGETATION ON PROPERTIES ADJACENT TO CONSTRUCTION WORK ZONES. ALL TREES WITHIN THE LIMITS OF CONSTRUCTION ARE TO BE PROTECTED UNLESS SPECIFICALLY IDENTIFIED ON THE PLANS TO BE REMOVED. ALL TRESS OUTSIDE THE CONSTRUCTION WORK ZONE ARE TO BE PROTECTED TO THE MAXIMUM EXTENT PRACTICABLE. TREE BARRICADES WILL BE INSTALLED AND MAINTAINED AROUND ALL TREES TO BE PROTECTED OR AS DIRECTED BY THE ENGINEER/JEA APPOINTED CONSTRUCTION INSPECTOR. THE CONTRACTOR SHALL EMPLOY A CERTIFIED ARBORIST TO MITIGATE IMPACTS TO TREES AS A RESULT OF CONSTRUCTION ACTIVITIES AND SHALL COORDINATE THESE TREE-RELATED ISSUES WITH THE JEA APPOINTED CONSTRUCTION INSPECTOR. NO TRENCHING OR EXCAVATION SHALL BE ALLOWED WITHIN THE CRITICAL PROTECTION ZONE OF ANY PROTECTED TREE, EXCEPT WHERE DEBITS HAVE BEEN NOTED ON THE PLANS OR MITIGATION HAS BEEN PERFORMED. ANY TREE-RELATED DAMAGE DUE TO CONSTRUCTION SHALL BE PAID BY THE CONTRACTOR.
15. ALL DISTURBED AREAS, EXCEPT FOR AREAS THAT ARE LANDSCAPED, PAVED, OR OTHERWISE DESIGNATED, ARE TO BE SODDED. EXISTING GRASSED AREAS THAT ARE DISTURBED WILL BE SODDED WITH THE SAME GRASS TYPE AS EXISTING, UNLESS OTHERWISE DIRECTED BY THE ENGINEER. CENTIPEDE SOD WILL BE USED FOR ALL DISTURBED AREAS NOT CURRENTLY GRASSED. WHERE SOD IS PLACED ON SLOPES OF 2:1 OR STEEPER, AN EROSION MAT WILL BE INSTALLED BENEATH THE SOD, AND THE SOD WILL BE STAKED. AREAS THAT ARE SODDED SHALL BE FERTILIZED AT AN APPLICATION RATE OF 450 LBS. /AC AND WILL BE WATERED AT A RATE OF 5,000 GAL/AC. NO SEPARATE PAYMENT WILL BE MADE AND ALL COSTS FOR FERTILIZING, WATERING, STAKING, AND FURNISHING AND INSTALLING EROSION MAT SHALL BE CONSIDERED INCIDENTAL TO OTHER PAY ITEMS IN THE CONTRACT.
16. A DEWATERING PLAN IS REQUIRED AND SHALL DETAIL THE MEASURES TO BE EMPLOYED TO LOWER THE GROUNDWATER TABLE AND/OR TO DIVERT SURFACE WATER DURING EXCAVATION AND CONSTRUCTION INCLUDING THE INSTALLATION AND MAINTENANCE OF ALL DEVICES TO BE USED DURING EACH PHASE OF CONSTRUCTION TO CONTROL EROSION AND THE TRANSPORTATION OF ERODED MATERIALS OFF SITE. TRENCH SHEETING AND BRACING SHALL BE ADEQUATE TO PREVENT CAVE-IN OF TRENCH WALLS, SUBSIDENCE OF AREAS ADJACENT TO THE TRENCH, DAMAGE TO WASTEWATER COLLECTION PIPELINES AND OTHER UTILITIES, AND SLOUGHING OF THE BASE OF THE EXCAVATION DUE TO WATER SEEPAGE. IT IS THE CONTRACTORS RESPONSIBILITY TO ENSURE THAT ALL DEWATERING ACTIVITIES ADHERE TO ALL LOCAL, STATE AND FEDERAL REGULATIONS AS WELL AS IT IS THE CONTRACTORS RESPONSIBILITY FOR THE ADEQUACY OF ANY SHEETING AND BRACING. THE COST OF DEWATERING, SHEETING AND BRACING IS CONSIDERED INCIDENTAL TO THE PAY ITEMS IN THE CONTRACT. NO SEPARATE PAYMENT WILL BE MADE FOR THIS WORK.
17. PAYMENT FOR PREPARING AND SUBMITTING THE DEWATERING PLAN IS CONSIDERED INCIDENTAL TO THE PAY ITEMS IN THE CONTRACT. NO SEPARATE PAYMENT WILL BE MADE FOR THIS WORK.
18. ALL DISTURBED AREAS TO BE LEFT IDLE LONGER THAN 14 DAYS MUST BE STABILIZED WITH QUICK GROW GRASS SEED AND MULCH.

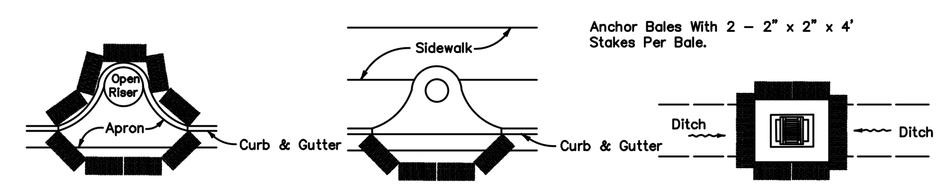

PROTECTION AROUND INLETS OR SIMILAR STRUCTURES

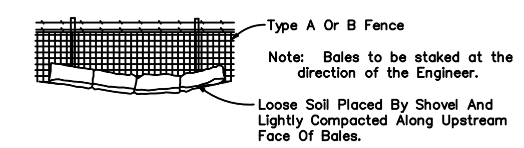

BALES BACKED BY FENCE

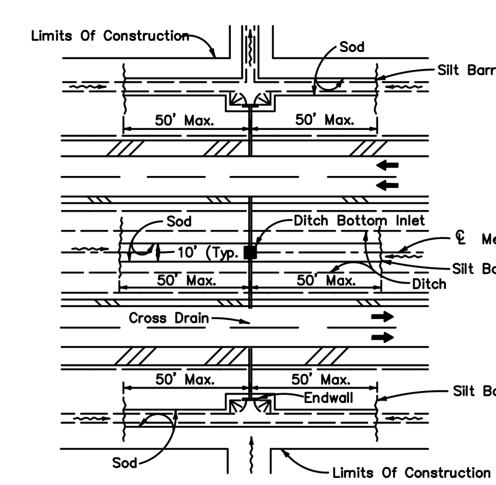

DITCH INSTALLATIONS AT DRAINAGE STRUCTURES

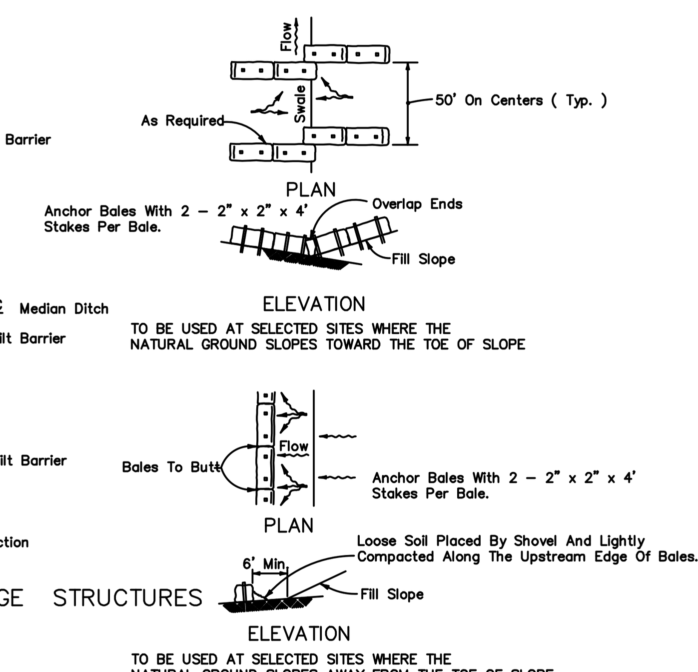

BARRIERS FOR FILL SLOPES

HAY BALE
LOCATION

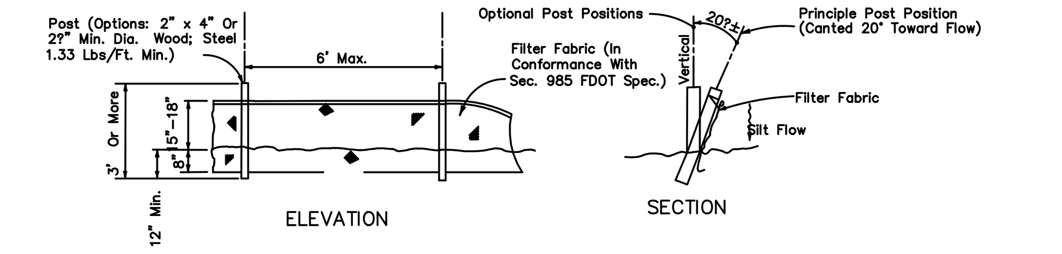

TYPE III SILT FENCE

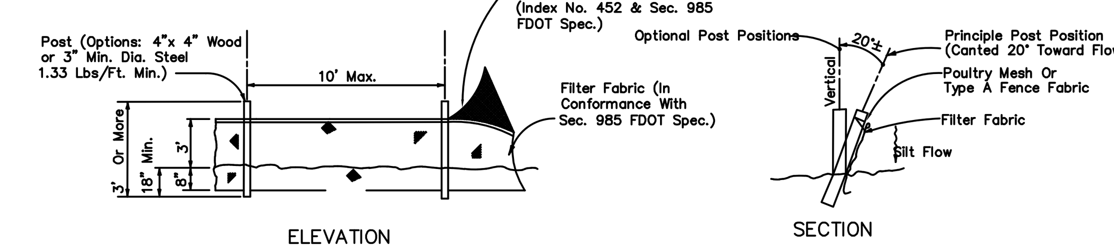

Note: Silt Fence to be paid for under the contract unit price for Staked Silt Fence (LF).

TYPE IV SILT FENCE

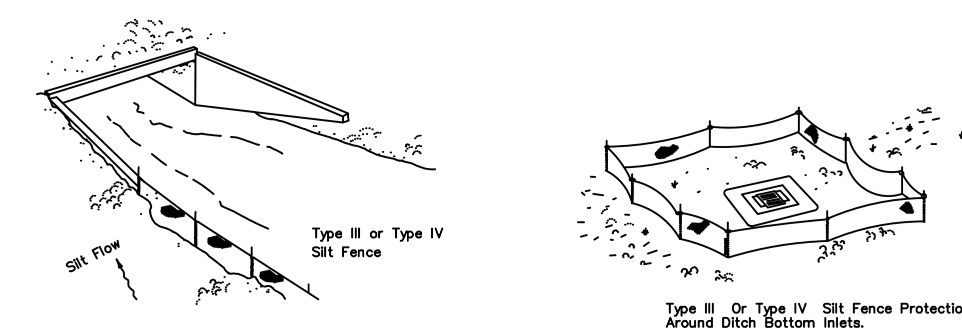

Do not deploy in a manner that silt fences will act as a dam across permanent flowing watercourses. Silt fences are to be used at upland locations and turbidity barriers used at permanent bodies of water.

SILT FENCE APPLICATIONS

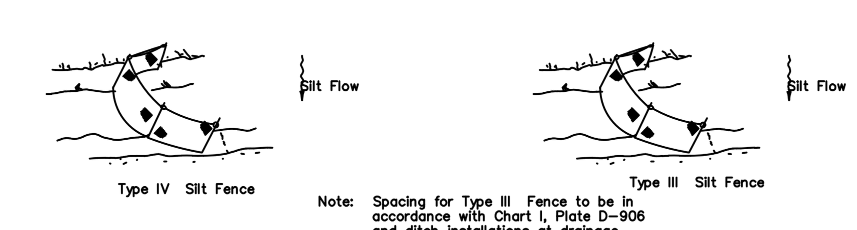

Note: Spacing for Type III Fence to be in accordance with Chart I, Plate D-906 and ditch installations at drainage structures above.

SILT FENCE
TYPE III & IV

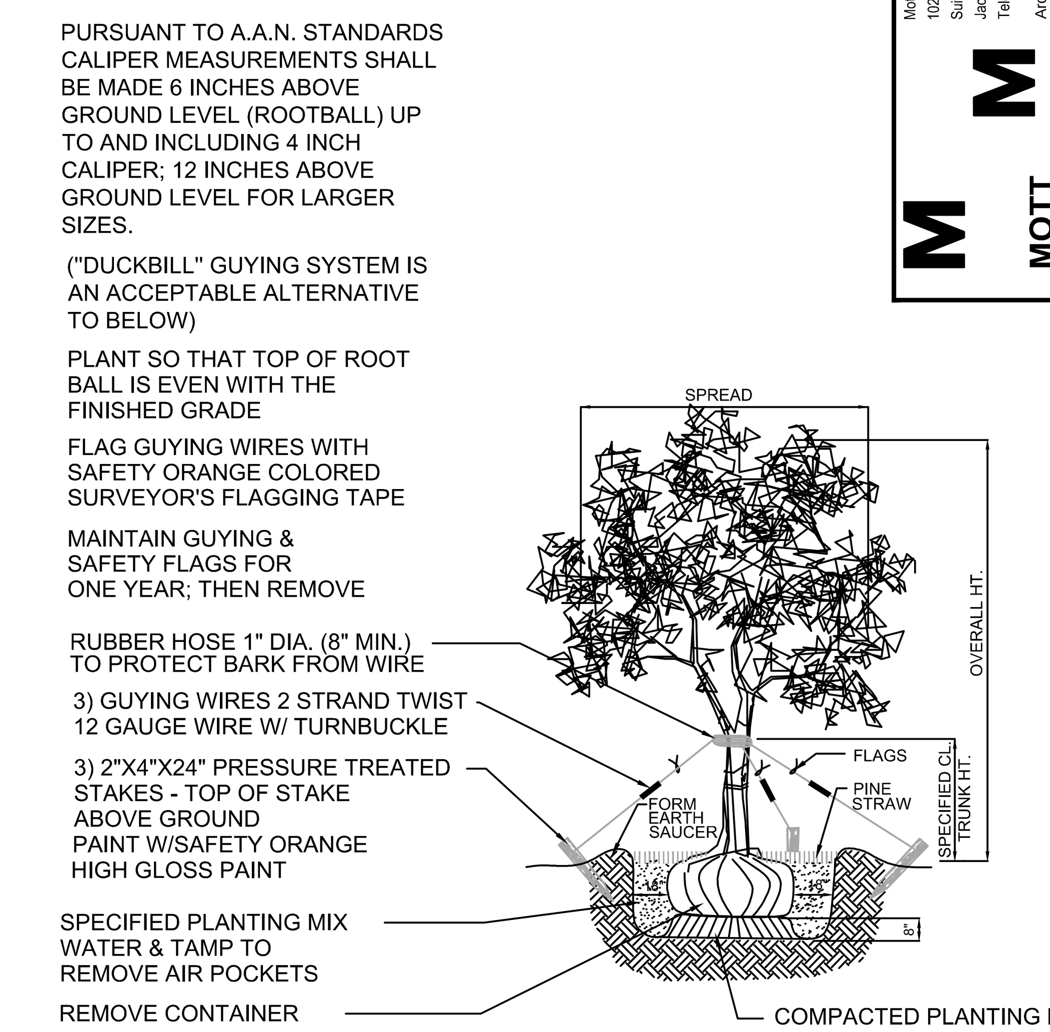

TREE TRUNK DIAMETER	SETUP (SINGLE/DOUBLE)	WATER CAPACITY (PER BAG)	FILLS REQ'D PER WEEK
2 TO 3 INCH	SINGLE BAG	14.5 GALLONS	2 FILLS PER WEEK
4 TO 5 INCH	DOUBLE BAG	23.5 GALLONS	1 FILL PER WEEK

TREE PLANTING DETAIL

N.T.S.

SEEDING MIXTURES, RATES AND DATES

Site Conditions	Seeding Mixtures	Seeding Rate Per Acre	Seeding Rate Per 1000 Ft²	Seeding Dates N. Fla.	Comments
High Maintenance Lawns					
General Use	1. Bahiagrass	40–60 lbs	1 lb	2/15–8/31	Use 50% scarified seed.
	2. Bahiagrass	40–60 lbs	1 lb	2/15–8/15	Use 50% scarified Bahia seed.
	Bermudagrass (hulled)	8–12 lbs	4 oz		
	3. Bahiagrass with one of the following:	20–30 lbs	.5 lb		Use 50% scarified Bahia seed.
	Southern White Clover	3 lbs	1.2 oz	9/1–1/1	Innoculate legumes.
	Annual White Sweetclover	8 lbs	3 oz	9/1–1/1	
	Crimson Clover	12 lbs	4.5 oz	9/1–1/1	
	Arrowleaf Clover	8 lbs	3 oz	9/1–1/1	
	Alyce Clover	8 lbs	3 oz	2/15–7/15	
	Hairy Indigo	4 lbs	1.5 oz	2/15–7/15	
	Aschynamene	12 lbs	4.5 oz	2/15–7/15	
Slopes	1. Sericea lespedeza	a.40–50 lbs	1.2 lbs	1/1–7/15	For scarified seed.
		b. 75 lbs	1.7 lbs	7/15–1/1	For unhulled seed.
	2. Serica lespedeza with one of the following:				Use seeding rate specified above.
	Bahiagrass	15 lbs	7 oz	2/15–8/15	
	Tall Fescue	20 lbs	8 oz	10/1–11/15	Best adapted to N. Florida
	Weeping Lovegrass	3 lbs	1.2 oz	2/15–8/15	
Droughty Areas	1. Weeping Lovegrass	5 lbs	2 oz	2/15–8/15	Gives quick summer cover.
	2. Weeping Lovegrass with one of the following:				
	a. Bahiagrass (50% scarified seed)	5 lbs	2 oz	2/15–8/15	
	b. Bermudagrass (Hulled)	30–40 lbs	12 oz	2/15–8/15	
	c. Hairy panicum	8–12 lbs	4 oz	2/15–8/15	
	d. Serica lespedeza	8–12 lbs	4 oz	2/15–8/15	Use seeding rate and dates specified above.

RATES AND DATES
SEEDING MIXTURES,

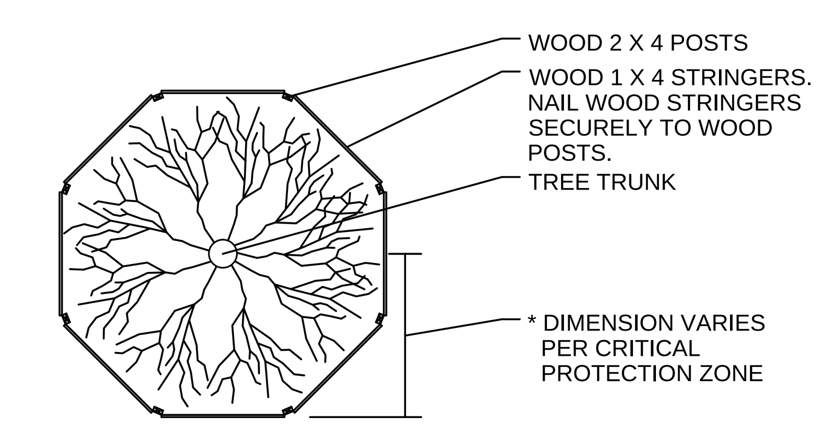

NOTE: FOR GROUPS OF TREES, PLACE BARRICADES BETWEEN TREES AND CONSTRUCTION ACTIVITY.

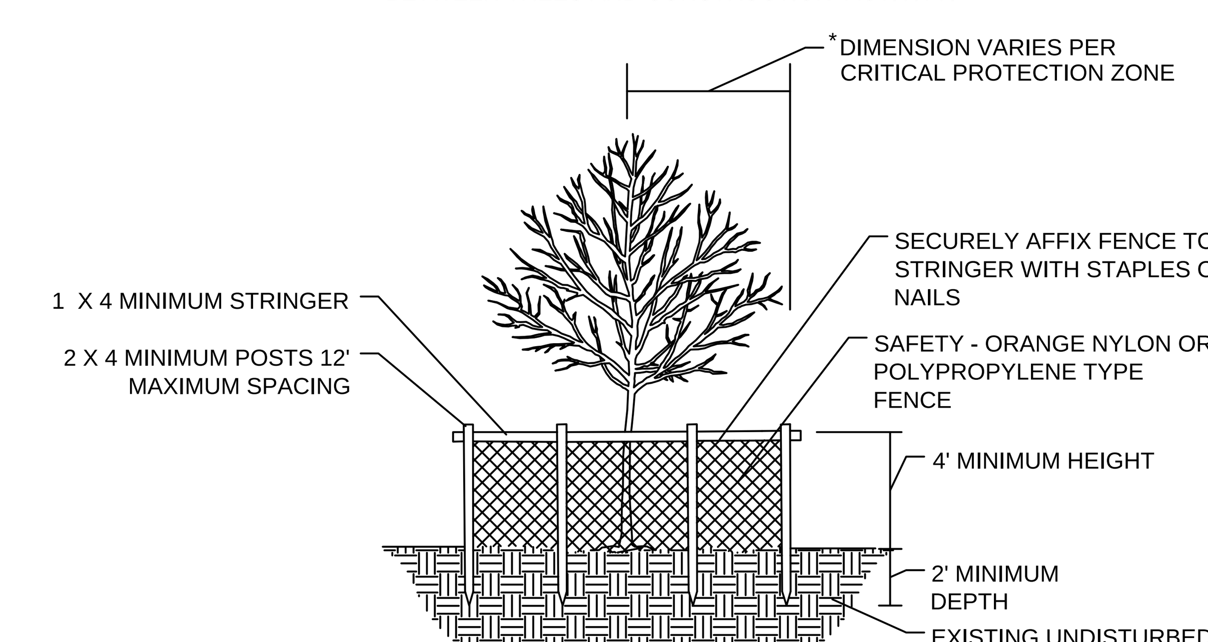

NOTES:
1. CRITICAL PROTECTION ZONE: THE AREA SURROUNDING A TREE WITHIN A CIRCLE DESCRIBED BY A RADIUS OF ONE FOOT FOR EACH INCH OF THE TREE TRUNK DIAMETER AT 54" ABOVE FINISHED GRADE. FOR GROUPS OF TREES, PLACE BARRICADES BETWEEN TREES AND CONSTRUCTION ACTIVITY.
2. TREE PROTECTION BARRICADES SHALL BE LOCATED TO PROTECT A MINIMUM OF 75% OF THE CRITICAL PROTECTION ZONE.

A - TREE PROTECTION
NTS

90% SUBMITTAL

Mott MacDonald Florida, LLC
10245 Centurion Parkway North
Suite 320
Jacksonville, Florida 32256
Telephone: (904) 203-1090
Architects AA - C0000035
Engineers EB - 0000155
Surveyors LB - 0006783
M M MOTT MACDONALD

REVISIONS

NO.	BY	DATE	
6.			
5.			
4.			
3.			
2.			
1.	MM	MAR 2018	FDEP ERP & USACE Form 4345 General Permit (Butchers Pen Creek)

DESIGN ENGINEER
LESLIE S. SAMEL, P.E., BCEE
FLORIDA REGISTRATION NO. 68763

DESIGNER: B. NEU
DRAWN BY: -
DATE: MARCH 2018
CHECKED BY: L. SAMEL
DATE: MARCH 2018

JEA Building Community℠

WEST GRID LENOX TO TIMUQUANA
FORCE MAIN IMPROVEMENTS
WILSON TO TIMUQUANA SEGMENT
CIVIL DETAILS

PROJ. NO. 376869
DATE: MARCH 2018
SCALE: AS NOTED

NO. SHEETS 72
SHEET NO. 38
DRAWING NO. CD-5

C:\pwworking\hmm\water_wastewater\lee79433\d0331269\CD-5.dwg Current Layout Tab = CD-5 Thu Apr 05, 2018 - 09:08

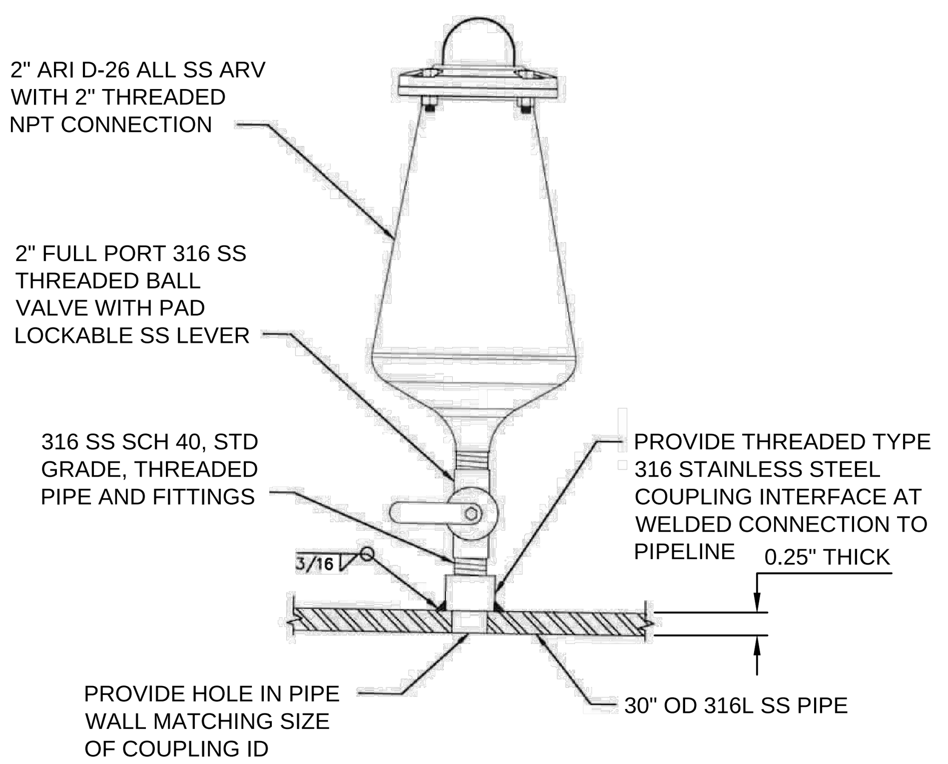

A AERIAL FORCE MAIN ARV
- NTS

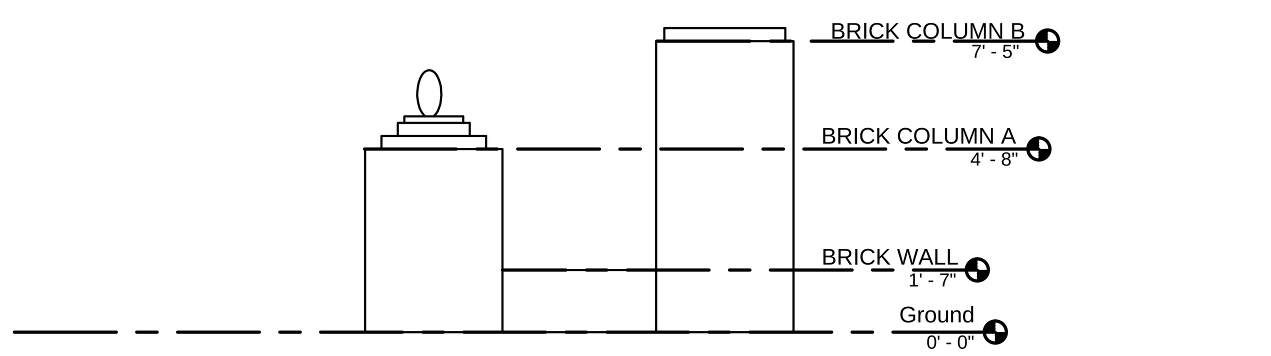

BACK VIEW

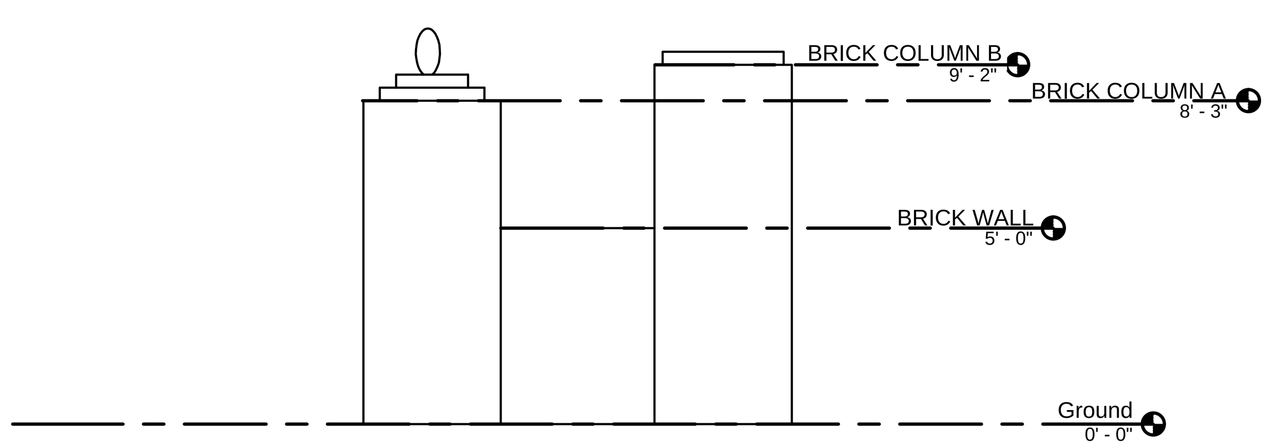

FRONT VIEW

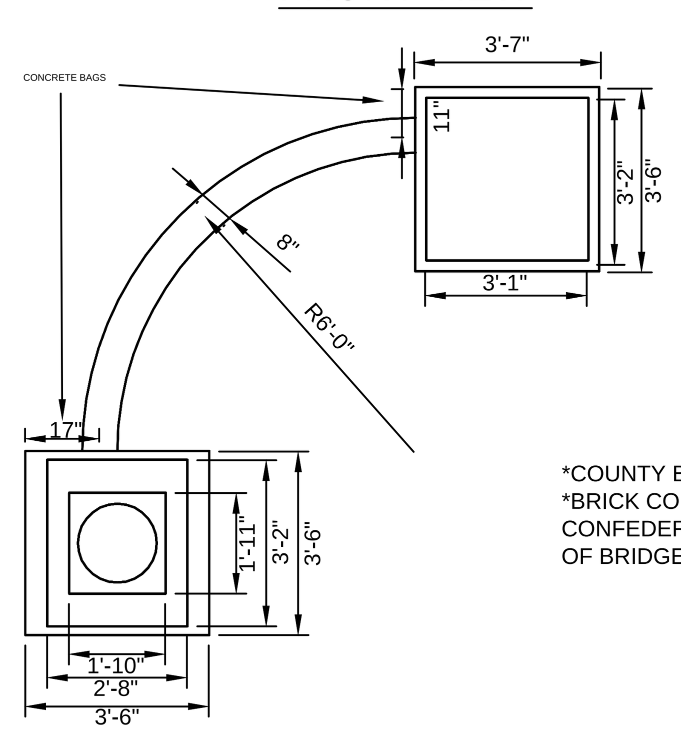

*COUNTY BM ON NE BRIDGE CORNER
*BRICK COLUMNS & WALL ON CONFEDERATE POINT ROAD NE CORNER OF BRIDGE OVER BUTCHERS CREEK

PLAN VIEW

E BRICK COLUMN AND WALL DETAILS
- NTS

FDOT

Table 285-1: Optional Base Groups 1 through 7							
	Base Group (Base Group Pay Item)						
Base Materials	1 (701)	2 (702)	3 (703)	4 (704)	5 (705)	6 (706)	7 (707)
B-12.5 and 4" Granular Subbase, LBR 100 (2)	-	-	-	-	-	-	-
RAP Base (4)	5" (4)	-	-	-	-	-	-

(1) Do not use on interstate roadways.
(2) The construction of both the subbase and Type B-12.5 will be bid and used as Optional Base. Granular subbases include limerock, cemented coquina, shell rock, bank run shell, recycled concrete aggregate and graded aggregate base. All subbase thicknesses are 4" minimum.
(3) Based on minimum practical thickness.
(4) Only for use on non-limited access paved shoulders, shared use paths, or other non-traffic bearing applications.
(5) To be used for widening, three feet or less.

Table 285-1(continued): Optional Base Groups 8 through 15								
	Base Group (Base Group Pay Item)							
Base Materials	8 (708)	9 (709)	10 (710)	11 (711)	12 (712)	13 (713)	14 (714)	15 (715)
Limerock, LBR 100	9-1/2"	10"	11"	12"	12-1/2"	13-1/2" (5)	14" (5)	-
Cemented Coquina, LBR 100	9-1/2"	10"	11"	12"	12-1/2"	13-1/2" (5)	14" (5)	-
Shell Rock, LBR 100	9-1/2"	10"	11"	12"	12-1/2"	13-1/2" (5)	14" (5)	-
Bank Run Shell, LBR 100	9-1/2"	10"	11"	12"	12-1/2"	13-1/2" (5)	14 (5)	-
Recycled Concrete Aggregate, LBR 150 (1)	9-1/2"	10"	11"	12"	12-1/2"	13-1/2" (5)	14" (5)	-
Graded Aggregate Base, LBR 100	11"	12"	13"	14"	-	-	-	-
Type B-12.5	5-1/2"	6"	6-1/2"	7"	7-1/2"	8"	8-1/2"	9"
B-12.5 and 4" Granular Subbase, LBR 100 (2)	-	4"	4-1/2"	5"	5-1/2"	6"	6-1/2"	7"
RAP Base (4)	-	-	-	-	-	-	-	-

(1) Do not use on interstate roadways.
(2) The construction of both the subbase and Type B-12.5 will be bid and used as Optional Base. Granular subbases include limerock, cemented coquina, shell rock, bank run shell, recycled concrete aggregate and graded aggregate base. All subbase thicknesses are 4" minimum.
(3) Based on minimum practical thickness.
(4) Only for use on non-limited access paved shoulders, shared use paths, or other non-traffic bearing applications.
(5) To be used for widening, three feet or less.

Table 285-2: Limited Use Optional Base Groups(1)								
	Base Group (Base Group Pay Item)							
Base Materials	101 (701)	102 (702)	103 (703)	104 (704)	105 (705)	106 (706)	107 (707)	108 (708)
Limerock Stabilized, LBR 70	5"	6-1/2""	8"	9"	10"	11"	12-1/2"	-
Shell, LBR 70	5"	6-1/2"	8"	9"	10"	11"	12-1/2"	-
Shell Stabilized, LBR 70	7"	8-1/2"	9-1/2"	10-1/2"	12"	-	-	-

* SEE DETAIL E/CD-6

B FDOT BASE MATERIAL TABLE
- NTS

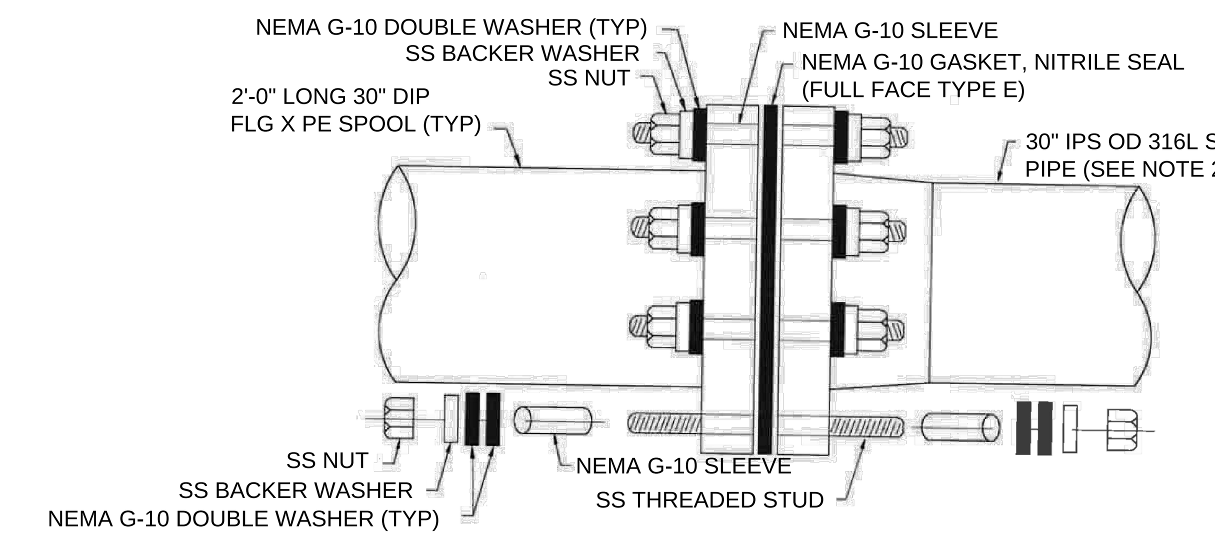

NOTES:

1. WELD NECK FLANGE SHOWN. ASSEMBLY ON OTHER FLANGES IS SIMILAR.
2. TAPER 30" SS PIPE TO MATCH 30" DIP INTERNAL DIAMETER AT FLANGE CONNECTION.
3. ALL COMPONENTS TO BE 316L STAINLESS STEEL.
4. FLANGE ISOLATION KIT SHALL BE BY LONE STAR GROUP, ADVANCE PRODUCTS AND SYSTEMS, STEP-KO PRODUCTS, OR OWNER APPROVED EQUIVALENT.

C FLANGE DIELECTRIC ISOLATION KIT
- NTS

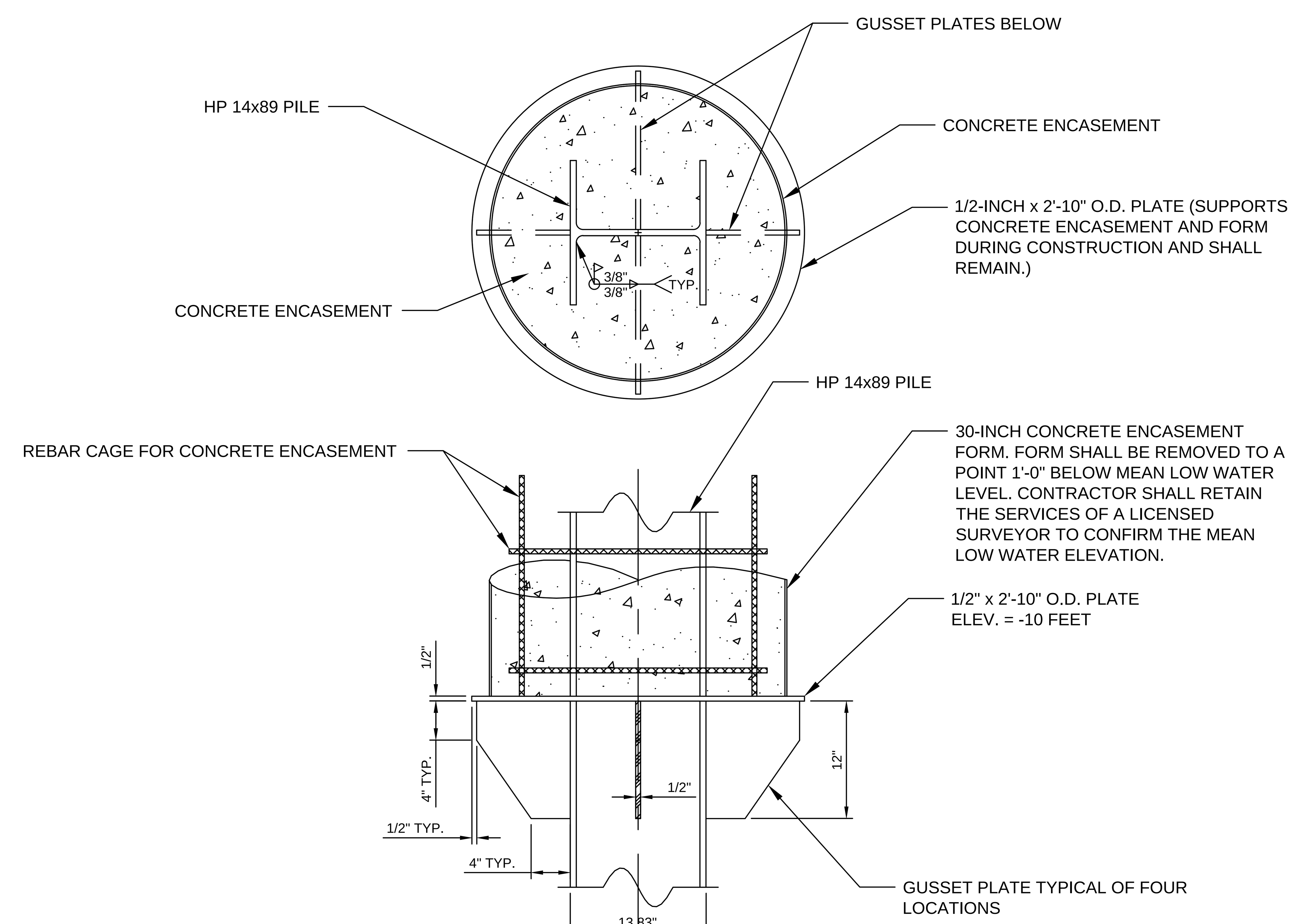

D PILE ENCASEMENT SUPPORT DETAIL
- NTS

PERMIT SUBMITTAL

Mott MacDonald Florida, LLC
10245 Centurion Parkway North
Suite 320
Jacksonville, Florida 32256
Telephone: (904) 203-1090
Architects AA - C0000035
Engineers EB - 0000155
Surveyors LB - 0006783
MOTT MACDONALD

NO.	BY	DATE	REVISIONS
6.			
5.			
4.			
3.			
2.			
1.	MM	MAR 2018	FDEP ERP & USACE Form 4345 General Permit (Butchers Pen Creek)

DESIGN ENGINEER
LESLIE S. SAMEL, P.E., BCEE
FLORIDA REGISTRATION NO.
68763

DESIGNER: B. NEU
DRAWN BY: -
DATE: MARCH 2018
CHECKED BY: L. SAMEL
DATE: MARCH 2018

JEA Building Community

WEST GRID LENOX TO TIMUQUANA
FORCE MAIN IMPROVEMENTS
WILSON TO TIMUQUANA SEGMENT
CIVIL DETAILS

PROJ. NO. 376869
DATE: MARCH 2018
SCALE: AS NOTED

NO. SHEETS 72
SHEET NO. 40
DRAWING NO. CD-7

THE OFFICIAL RECORD OF THIS SHEET IS THE ELECTRONIC FILE DIGITALLY SIGNED AND SEALED UNDER RULE 61G15.23.004 F.A.C.

C:\pwworking\hmm\water_wastewater\mottmac_ngu85083\d0331269\CD-7.dwg Current Layout Tab = CD-7 Wed Apr 04, 2018 - 09:47

GENERAL NOTES:

1. CONTRACTOR SHALL FIELD CONFIRM THE LOCATION OF THE EXISTING 24" DI FM UNDER BUTCHERS PEN CREEK PRIOR TO CONSTRUCTION IN THIS AREA.
2. THE BOTTOM OF THE 30" PIPE FLANGES SHALL BE ABOVE THE BOTTOM OF THE BRIDGE SLAB. FLANGED PIPE CONNECTIONS SHALL ALSO BE DETAILED TO AVOID CONFLICT WITH CONCRETE PILE BENTS AND MINIMUM PIPE LENGTHS OF 30 FEET.
3. THE FDOT LOAD RATING OF THE BRIDGE IS 17 TONS FOR 2-AXLE, 23 TONS FOR 3-AXLE AND 25 TONS FOR 4-AXLE, AS SHOWN ON THE MUTCD SIGN ON THIS SHEET.
4. THE CONTRACTOR SHALL HIRE A SPECIALTY ENGINEER TO EVALUATE AND SUBMIT SIGNED AND SEALED CALCULATIONS DEMONSTRATING THE BRIDGE CAN SUPPPORT THE ANTICIPATED CONSTRUCTION LOADS IF IT IS THE CONTRACTOR'S INTENT TO WORK FROM THE EXISTING BRIDGE. LIKEWISE, IF FOR ANY REASON THE CONTRACTOR INTENDS TO WORK FROM THE WATER BY BARGE OR OTHERWISE, THE CONTRACTOR SHALL AVOID ANY ENVIRONMENTAL IMPACTS AND OBTAIN ANY NECESSARY PERMITS AS MAY BE REQUIRED. SIGNED AND SEALED PLANS SHALL BE PROVIDED BY A FLORIDA PE.
5. THE CONTRACTOR SHALL BE RESPONSIBLE FOR OBTAINING CITY OF JACKSONVILLE PERMISSION FOR ANY NECESSARY BRIDGE CLOSURES.
6. THE CONTRACTOR SHALL BE RESPONSIBLE FOR IMPLEMENTING THE MONITORING OF EXISTING STRUCTURES PRIOR TO AND DURING THE PILE INSTALLATION PROCESS IN ACCORDANCE WITH THE REQUIREMENTS OF FDOT STANDARD SPECIFICATION SECTION 108, LATEST EDITION.
7. CONTRACTOR SHALL ALIGN THE NEW PIPE SUPPORT PILE BENTS SUCH THAT THE CENTER BENT IS CENTERED ON THE BRIDGE AND THE CORRESPONDING PILE SUPPORTED BRIDGE BENT.
8. SEE SHEET C-11 FOR DETAILS REGARDING FORCE MAIN CONSTRUCTION.
9. CONTRACTOR SHALL NOT INSTALL PVC FM WITHIN 100' OF EACH SIDE OF THE SS FM.
10. THE CONTRACTOR SHALL NOTIFY THE USCG SECTOR JACKSONVILLE-WATERWAYS MANAGEMENT OFFICE AT LEAST 30 DAYS PRIOR TO ANY CONSTRUCTION IN OR OVER BUTCHERS PEN AND FISHING CREEKS

Lt. Allan Storm
USCG Sector Jacksonville
Waterways Management Office
10426 Alta Drive
Jacksonville, FL 32226

Rory C. Boyle, MST3
Rory.C.Boyle@uscg.mil
904.717.7648

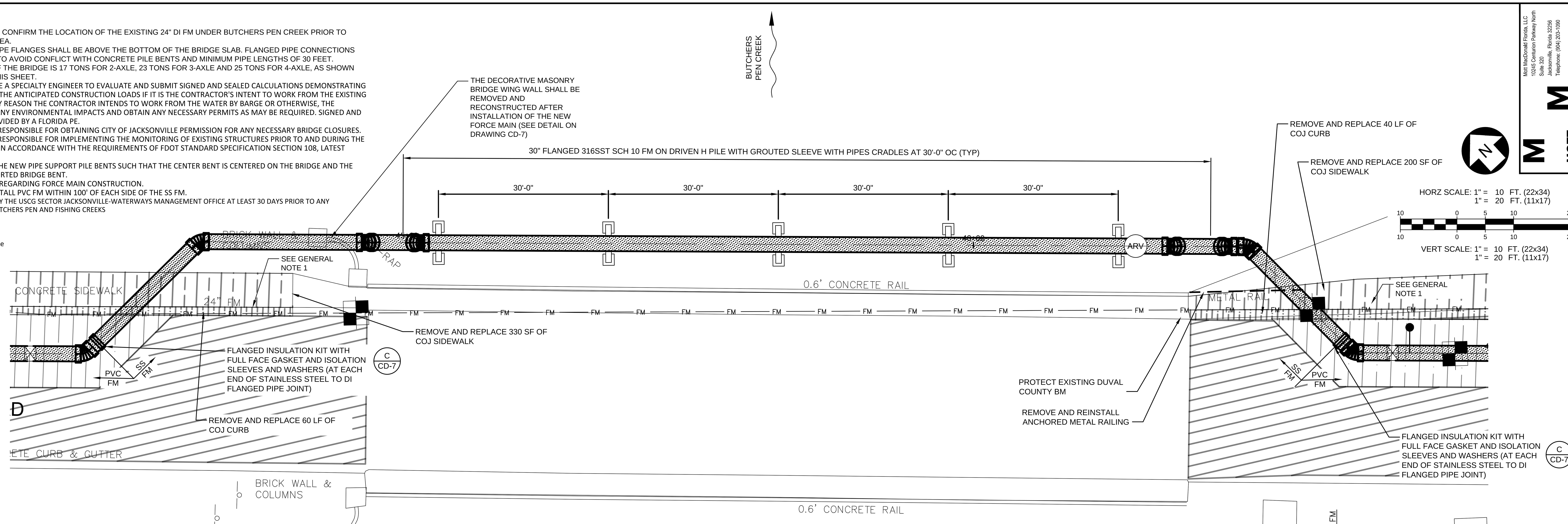

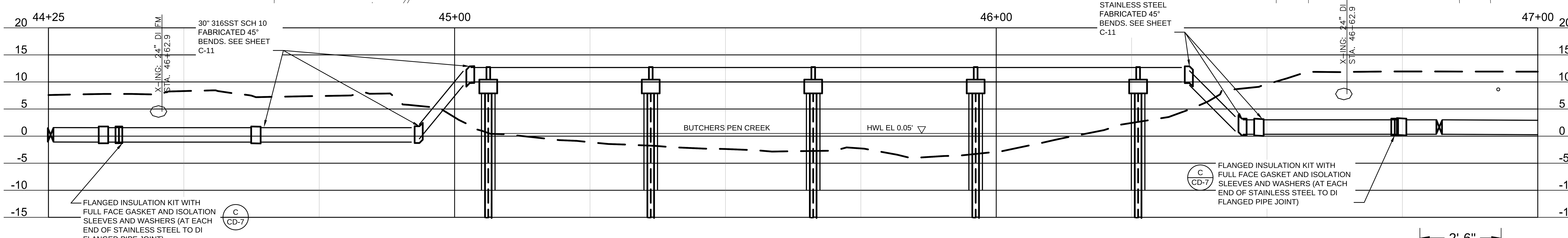

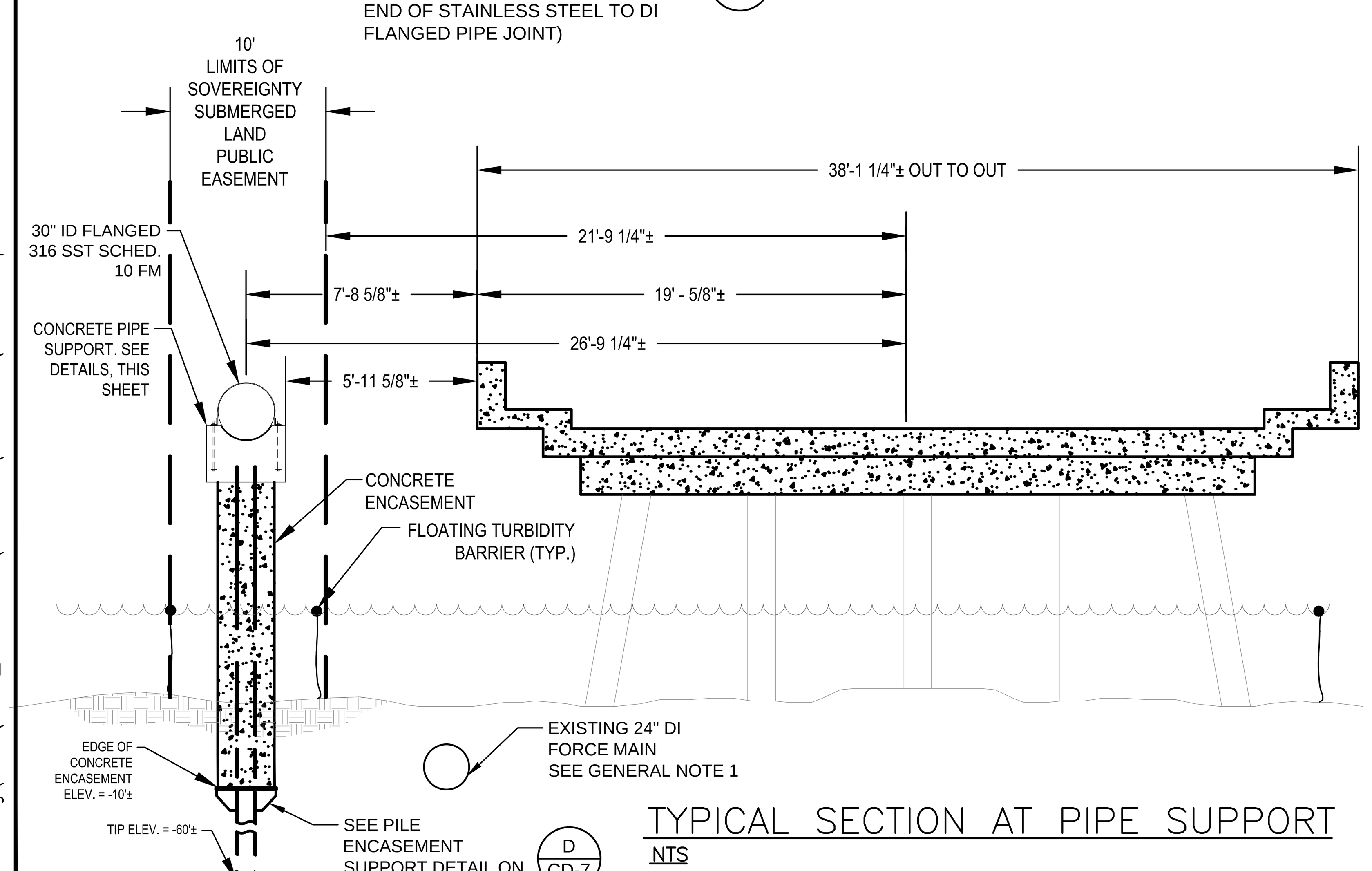

TYPICAL SECTION AT PIPE SUPPORT
NTS

AERIAL CROSSING NOTES:

1. PAINT PILE PER SECTION 560 OF THE F.D.O.T. STANDARD SPECIFICATION FOR ROAD AND BRIDGE CONSTRUCTION.
2. ALL PILES SHALL BE ENCASED WITH REINFORCED CONCRETE (5000 PSI). PROVIDE PERMANENT STEEL CASING FOR THE STEEL H-PILE FROM ±6' OF THE MUDLINE TO A POINT APPROXIMATELY 25 FEET BELOW THE MUDLINE AND INTO FIRM SANDS (A-2-4 SAND). AFTER PILE INSTALLATION IS COMPLETE, THE CASING IS CONSIDERED SACRIFICIAL LONG-TERM, THEREFORE CASING COATINGS ARE NOT REQUIRED AND CORROSION RESISTANT CASING MATERIAL IS NOT REQUIRED. THE CONTRACTOR IS RESPONSIBLE TO SELECT A CASING THICKNESS THAT ENSURED THAT THE CASING HAS AMPLE STRENGTH TO WITHSTAND HANDLING AND INSTALLATION STRESSES AND THE PRESSURE OF WET CONCRETE AND OF THE SURROUNDING EARTH MATERIALS.
3. REINFORCING STEEL SHALL COMPLY ASTM-615 GRADE 60. PLACEMENT SHALL CONFORM TO ACI-301, ACI-315, ACI-318 AND CRSI "MANUAL OF STANDARD PRACTICE". ALL REINFORCING SHALL BE ACCURATELY PLACED, RIGIDLY SUPPORTED AND FIRMLY TIED IN PLACE.
4. ALL STRUCTURAL STEEL WORK SHALL CONFORM TO THE AISC "MANUAL OF STEEL CONSTRUCTION".
5. HP 14x89 PILES SHALL BE A572 GRADE 50.
6. STRUCTURAL STEEL WELDING SHALL CONFORM TO AMERICAN WELDING SOCIETY STANDARD (AWS) D.1.1, LATEST EDITION.
7. THE FORCE MAIN HOLD DOWN STRAP AT THE BENT CAPS SHALL BE FABRICATED AS A BENT PLATE WITH AN INSIDE RADIUS MATCHING THE PIPELINE OD (WITH A TOLERANCE OF PLUS 1/8", MINUS 0"). ALL HOLD DOWN STEEL SHALL CONFORM TO ASTM A240 TYPE 316L OR ASTM A276 TYPE 316L STAINLESS STEEL.
8. THE ANCHORS, NUTS AND WASHERS FOR THE FORCE MAIN HOLD DOWN STRAP SHALL BE STAINLESS STEEL TYPE 316. A 3/4" DIAMETER ROD AND 3"x3"X1/4" PLATE WASHER AND NUT SHALL BE EMBEDDED 2'-0' WITHIN CONCRETE.
9. PROVIDE NEOPRENE BEARING PADS AT THE BENT CAP PIPELINE SADDLE SUPPORTS. FULLY BOND PADS TO PIPELINE PRIOR TO FINAL PLACEMENT ON CAPS. THIS BONDING IS INTENDED TO PREVENT WATER INTRUSION BETWEEN THE PAD AND PIPELINE TO MINIMIZE CREVICE TYPE CORROSION CONDITION.
10. STEEL H PILES SHALL BE INSTALLED IN ACCORDANCE WITH SECTION 455 OF THE FLORIDA DEPARTMENT OF TRANSPORTATION STANDARD SPECIFICATION FOR ROAD AND BRIDGE CONSTRUCTION, LATEST EDITION.
11. THE MINIMUM PILE TIP ELEVATION IS -60 FEET. THE DESIGN PILE CAPACITY IS 20 TONS. PILES SHALL BE MONITORED FOR DRIVING RESISTANCE IN ACCORDANCE WITH AN APPLICABLE DYNAMIC PILE DRIVING FORMULA APPROVED BY THE ENGINEER AND AS OUTLINED IN THE GEOTECHNICAL REPORT.
12. CONTRACTOR SHALL COMPLY WITH SECTION 7, PARAGRAPHS 7-7 AND 7-8 OF THE FLORIDA DEPARTMENT OF TRANSPORTATION STANDARD SPECIFICATIONS FOR ROAD AND BRIDGE CONSTRUCTION, 2017 EDITION IN REGARDS TO PLACING PIPE SUPPORTS AT BUTCHERS PEN CREEK BRIDGE AND OPERATING EQUIPMENT FROM THE BRIDGE.

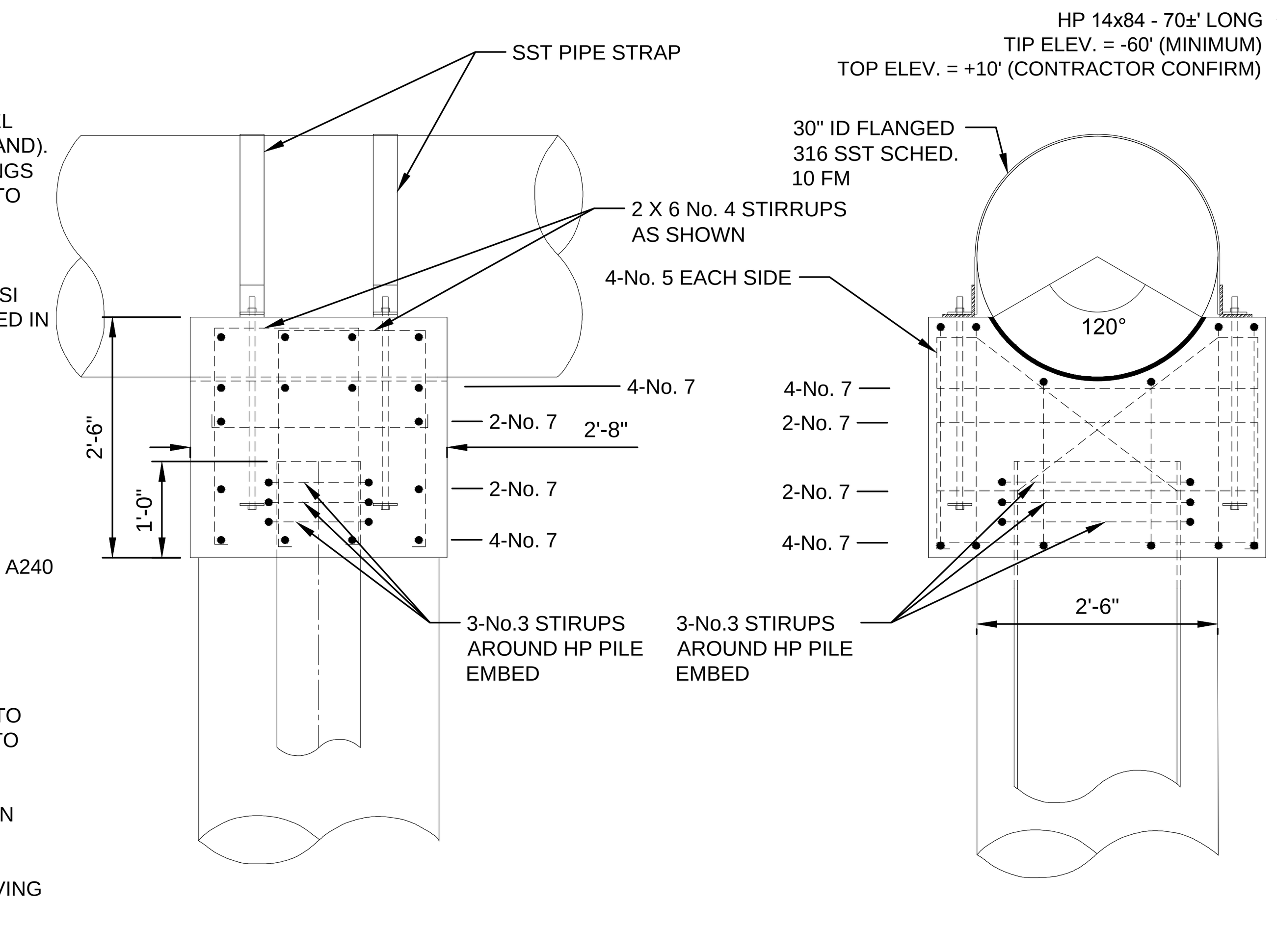

PIPE SUPPORT DETAIL
NTS

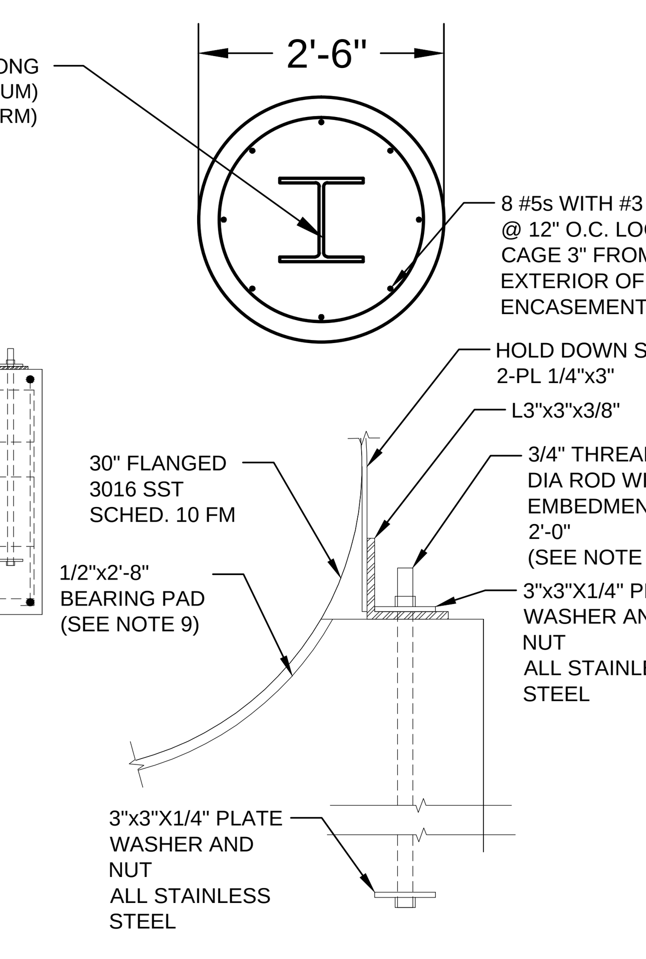

HOLD DOWN AND PAD DETAIL

PERMIT SUBMITTAL

WEST GRID LENOX TO TIMUQUANA FORCE MAIN IMPROVEMENTS
WILSON TO TIMUQUANA SEGMENT
BUTCHERS PEN FM CROSSING DETAIL

MOTT MACDONALD

Mott MacDonald Florida, LLC
10245 Centurion Parkway North Suite 320
Jacksonville, Florida 32256
Telephone (904) 203-1090
Architects AA - C000035
Engineers EB - 0000155
Surveyors LB - 0006783

JEA Building Community

NO.	BY	DATE	REVISIONS
1.	MM	MAR 2018	FDEP ERP & USACE Form 4345 General Permit (Butchers Pen Creek)

DESIGN ENGINEER: LESLIE S. SAMEL, P.E., BCEE
FLORIDA REGISTRATION NO. 68763

DESIGNER: B. NEU
DRAWN BY: H. ROBERTS
DATE: MARCH 2018
CHECKED BY: B. PERRY
DATE: MARCH 2018

PROJ. NO. 376869
DATE: MARCH 2018
SCALE: 1" = 10' 1" = 5'

NO. SHEETS 72
SHEET NO. 41
DRAWING NO. CD-8

THE OFFICIAL RECORD OF THIS SHEET IS THE ELECTRONIC FILE DIGITALLY SIGNED AND SEALED UNDER RULE 61G15.23.004 F.A.C.

C:\pwworking\hmm\water_wastewater\lee79433\d0331269\CD-8 Simplified Butchers Pen Crossing 2014.dwg   Current Layout Tab = SIMPLIFIED PLAN AND PROFILE   Wed Apr 04, 2018 – 11:27

Xrefs Attached= 376869_WTS-FM-DRef [..\d0339050\376869_WTS-FM-DRef.dwg]
XCNSTPLN_WTS [..\d0339050\XCNSTPLN_WTS.dwg]
XCSTEPLN_WTS [..\d0339050\XCSTEPLN_WTS.dwg]
JEA_SH22x34_BOR-WTS [..\d0252016\JEA_SH22x34_BOR-WTS.dwg]