Geotechnical Exploration and Evaluation Report

Riverview Water Main Extension Phase 1
Duval County, Florida

CSI Geo Project No.: 71-16-339-02
Constantine Project No.: 100433.02

Prepared by

CSI Geo, Inc.
2394 St. Johns Bluff Road S., Suite 200
Jacksonville, FL 32246
Tel: (904) 641-1993
Fax: (904) 641-0057

Prepared for

Constantine Engineering, Inc.

January 10, 2017

CSI Geo
Geotechnical · CMT · CEI

January 10, 2017

Mr. Ted Hortenstine, P.E.
Constantine Engineering, Inc.
311 State Road 16
St. Augustine, FL 32084

RE: Riverview Water Main Extension Phase 1
Duval County, Florida

Subject: Geotechnical Exploration and Evaluation Report
CSI Geo Project No.: 71-16-339-02
Constantine Project No.: 100433.02

Dear Mr. Hortenstine:

CSI Geo, Inc. has performed the authorized geotechnical exploration and laboratory testing program for the proposed Riverview water main extension (Phase 1) in Duval County, Florida. This geotechnical exploration and evaluation report presents our understanding of the subsurface conditions along with our engineering evaluation and recommendations.

We have enjoyed working with you on this project and look forward to working with you on future projects. If you have any questions concerning this report, please contact our office.

Sincerely,

CSI Geo, Inc.

Bruce Khosrozadeh
2017.01.10
13:05:15-05'00'

Nader Amer, Ph.D
Geotechnical Engineer

Bruce Khosrozadeh, P.E.
Senior Geotechnical and
Materials Engineer
Registered, Florida No. 45273

TABLE OF CONTENTS

SECTION	PAGE NUMBER
1.0 Project Information	**1**
1.1 General Project Information	
1.2 Existing Conditions and Project Description	
2.0 Geotechnical Exploration	**2**
2.1 Field Exploration	
2.2 Laboratory Testing	
3.0 General Subsurface Conditions	**3**
3.1 General	
3.2 Soil Conditions	
3.3 Groundwater Conditions	
3.4 Existing Pavement System Thickness	
4.0 Design Recommendations	**5**
4.1 General	
4.2 Open-Cut Excavations	
5.0 Site Preparation & Earthwork Recommendations	**6**
5.1 Existing Utilities	
5.2 Temporary Groundwater Control	
5.3 Excavation Protection	
5.4 Pipe Backfill and Compaction of Pipe Backfill	
6.0 Report Limitations	**8**

APPENDIX

- Site Location Map
- Field Exploration Plan
- General Subsurface Profiles
- Summary of Laboratory Testing Results
- Existing Pavement System Thickness
- JEA Conceptual Watermain Layout & Potential Phasing
- Key to Soil Classification
- Field and Laboratory Test Procedures

1.0 PROJECT INFORMATION

1.1 General Project Information

The purpose of this geotechnical exploration program was to develop information concerning the subsurface conditions in order to evaluate the site with respect to the proposed water main extension in the Riverview area in Duval County, Florida. Based on the information provided to us, we understand that the overall project consists of two phases. The two project phases are presented on the Riverview Target Area Conceptual Watermain Layout and Potential Phasing plan included in the Appendix. This geotechnical exploration was performed for Phase 1 of the project.

This report describes the field and laboratory testing activities performed for Phase 1 of the project and presents the findings. The subsurface soil and groundwater conditions are presented in this report along with general site preparation recommendations and soil parameters for the proposed construction.

Information regarding this project was provided to CSI Geo, Inc. (CSI Geo) by Mr. Ted Hortenstine, P.E. of Constantine Engineering, Inc.

1.2 Existing Conditions and Project Description

Based on the information provided to us, the proposed water main extension will be installed by connecting to an existing 12-inch water main located along Bassett Road about 500 feet east of Lem Turner Road. The water main extension pipe sizes range from 2 to 10 inches in diameter. The water main pipes are proposed to be installed along Basset Road (10-inch dia.), Carbondale Drive, Jefferson Avenue, Madison Avenue, and Sappington Avenue (6 and 8-inch dia.). The 2-inch water main pipe is proposed at the end of Lauder Avenue and Mann Lane. The water main extension pipes are proposed to be installed using open-cut method of installation.

2.0 GEOTECHNICAL EXPLORATION

2.1 Field Exploration

The water main extension pipe alignment were explored by means of a total of 24 auger borings (A-1 through A-24) drilled to a depth of 6 feet below the existing ground surface. The field exploration also included ten pavement cores (C-1 thorough C-10) taken at roadway intersections to evaluate the existing pavement system thicknesses.

The boring locations were placed at approximately 400 feet spacing, and located in the field by personnel from CSI Geo. Soil samples collected were visually classified in the field and then transported to our laboratory for re-classification and testing. The approximate locations of the soil borings and pavement cores are shown on the Field Exploration Plan sheet included in the **Appendix**.

2.2 Laboratory Testing

Representative soil samples obtained during our field exploration program were visually classified using the American Association of State Highway and Transportation Officials (AASHTO) Soil Classification System. Quantitative laboratory testing was performed on representative soil samples to better define their composition. Laboratory tests performed were percent fines, natural moisture content, organic content, and Atterberg limits. A Summary of Laboratory Test Results, and Field and Laboratory Test Procedures are included in the **Appendix**.

3.0 GENERAL SUBSURFACE CONDITIONS

3.1 General

An illustrated representation of the subsurface conditions encountered in the proposed construction areas are shown on the General Subsurface Profiles sheets presented in the **Appendix**. The General Subsurface Profiles and the soil conditions outlined below highlight the major subsurface stratifications. The General Subsurface Profiles in the **Appendix** should be consulted for a detailed description of the subsurface conditions encountered at each boring location. When reviewing the General Subsurface Profiles, it should be understood that soil conditions may vary outside of the explored area.

3.2 Soil Conditions

Review of test borings A-1 through A-24 indicates that the explored areas are generally underlain by inter-bedded deposits of sands and slightly silty fine sands (A-3) with occasional deposits of silty fine sands (A-2-4) until the boring termination depth of 6 feet below the existing grades. An isolated layer of sandy clay (A-6) was encountered in boring A-5 between the depth of 4 and 6 feet below the existing grades.

Organic silty sands and sands with some roots (A-8) were encountered in auger borings A-3, A-16, A-18, A-19, and A-20. All A-8 soils were encountered in the upper 0.5 to 1-foot of depth except at boring A-20 where an organic silty sand layer (A-8) was encountered between the depths of 2 and 3 feet below the existing grades.

3.3 Groundwater Conditions

The groundwater level was measured and recorded as encountered at the time of drilling. The depths of the groundwater level and estimated seasonal high water level at the test location are marked on the General Subsurface Profiles sheets presented in the **Appendix**. The depth of groundwater level measured at the time of drilling ranged from 2.5 to 4.0 feet below the existing ground surface. The estimated depth of seasonal high water level ranged from 2.0 to 3.0 feet below the existing ground surface. It should be anticipated that the groundwater level will fluctuate due to seasonal climate variations, surface water runoff patterns, construction operations, tidal effects, and other related factors.

3.4 Existing Pavement System Thickness

Ten pavement cores (C-1 through C-10) were conducted to determine the existing pavement system thickness at the roadway intersections. The existing asphalt pavement at each location was measured and found to consist of 3 to 8 inches of asphalt underlain by 1 to 3 inches of limerock. Limerock base was not encountered at core locations C-1, C-2, C-4, C-6, C-8 and C-10. The complete results of the existing pavement system thickness are included in the **Appendix**.

4.0 DESIGN RECOMMENDATIONS

4.1 General

Our geotechnical evaluation of the site and the subsurface conditions are based on our understanding of the proposed project, our observations, and results of field and laboratory testing. The recommendations provided in this report present construction methods and techniques that are appropriate for the proposed construction. If the project location is changed or if field conditions encountered during construction are different from those presented in this report, the information should be provided to CSI Geo for evaluation. We also recommend that CSI Geo be given the opportunity to review the design plans and specifications to ensure that our recommendations have been properly included and implemented.

In general, we consider the subsurface soil conditions at the site to be favorable for support of the proposed pipes over a properly prepared and compacted subgrade, provided that the site preparation and earthwork construction recommendations in this report are performed.

4.2 Open-Cut Excavations

The A-3 type soils are considered Select material. Silty sands (A-2-4) can be treated as Select material; however, they may contain excess moisture and may be difficult to dry and to compact.

Sandy clays (A-6) when encountered during construction should be considered plastic materials and excavated to a minimum depth of one foot below the design invert elevations and replaced with suitable A-3 fill material. Organic soils (A-8) should be considered as muck and not suitable for use as backfill. If A-8 materials are encountered beneath the water main or other proposed structures they should be removed in their entirety.

We anticipate that the buried pipe lines will exert little downward pressure on the subgrade soils. In areas where the surrounding groundwater level is above the pipe invert elevation, the line should be designed to resist lateral earth pressures and hydrostatic uplift pressures appropriate to its depth below the existing grade and the seasonal high water level.

5.0 SITE PREPARATION & EARTHWORK RECOMMENDATIONS

5.1 Existing Utilities

The locations of existing utilities should be established prior to construction. Provisions should be made to relocate utilities interfering with the proposed alignments and construction, as needed. Underground pipes that are not operational should be either removed or plugged otherwise they may become conduits for subsurface erosion and cause settlements.

5.2 Temporary Groundwater Control

Groundwater level was encountered at the time of drilling at a depth ranging from 2.5 to 4.0 feet below the existing ground surface. Therefore, groundwater control should be anticipated. The groundwater level should be maintained at a minimum of two feet below the subgrade of the proposed inverts. Dewatering may be achieved by conventional open pumping using ditches graded to a sump or by using a well point system. Dewatering should continue until sufficient weight is placed over the proposed pipes to resist uplift.

5.3 Excavation Protection

All excavations should meet OSHA Excavation Standard Subpart P regulations for Type C soils. A trench box or braced sheet pile structure may be required to support the open excavations depending on their depths. The soil support system should be designed by a Florida registered Professional Engineer.

5.4 Pipe Backfill and Compaction of Pipe Backfill

The backfill material within the excavation should be placed in thin loose lifts not exceeding 6 or 12 inches in thickness. The backfill material should be compacted by the use of hand-operated equipment. The backfill material should be granular (A-3) fill with less than 10 percent material passing the no. 200 mesh sieve and containing less than 3 percent organic matter. The backfill material should be compacted to a minimum density of 98% or 95% of maximum dry density obtained from the Modified Proctor compaction test (ASTM D1557). The moisture content during compaction should be maintained within $\pm$ 3 percent of the optimum moisture content as obtained from the Modified Proctor compaction test.

Hand held compaction equipment should be used for the backfill placed around the pipe and to a height of 2 feet above the pipe. Heavier equipment may be used on the remaining backfill lifts placed above the 2 feet above the pipe. However, care should be taken not to damage the pipe below. The pipe should be designed to withstand the anticipated dead (overburden) and live loads.

6.0 REPORT LIMITATIONS

The subsurface exploration program including our evaluation and recommendations was performed in general accordance of accepted geotechnical engineering principles and standard practices. CSI Geo is not responsible for any independent conclusions, opinions, or interpretations made by others based on the data presented in this report.

This report does not reflect any variations that may occur adjacent or between soil borings. The discovery of any site or subsurface condition during construction that deviates from the findings and data as presented in this report should be reported to CSI Geo for evaluation. If the locations of the proposed project features are changed, our office should be contacted so our recommendations can be re-evaluated. We recommend that CSI Geo be given the opportunity to review the final design drawings and specifications to ensure that our recommendations are properly included and implemented.

APPENDIX

Site Location Map

Field Exploration Plan

General Subsurface Profiles

Summary of Laboratory Testing Results

Existing Pavement System Thickness

Conceptual Watermain Layout & Potential Phasing

Key to Soil Classification

Field and Laboratory Test Procedures

Site Location Map

CSI GEO, INC.
2394 ST. JOHNS BLUFF ROAD S., SUITE 200
JACKSONVILLE, FLORIDA 32246

SITE LOCATION MAP
RIVERVIEW WATER MAIN EXTENSION PHASE 1
DUVAL COUNTY, FLORIDA

Field Exploration Plan

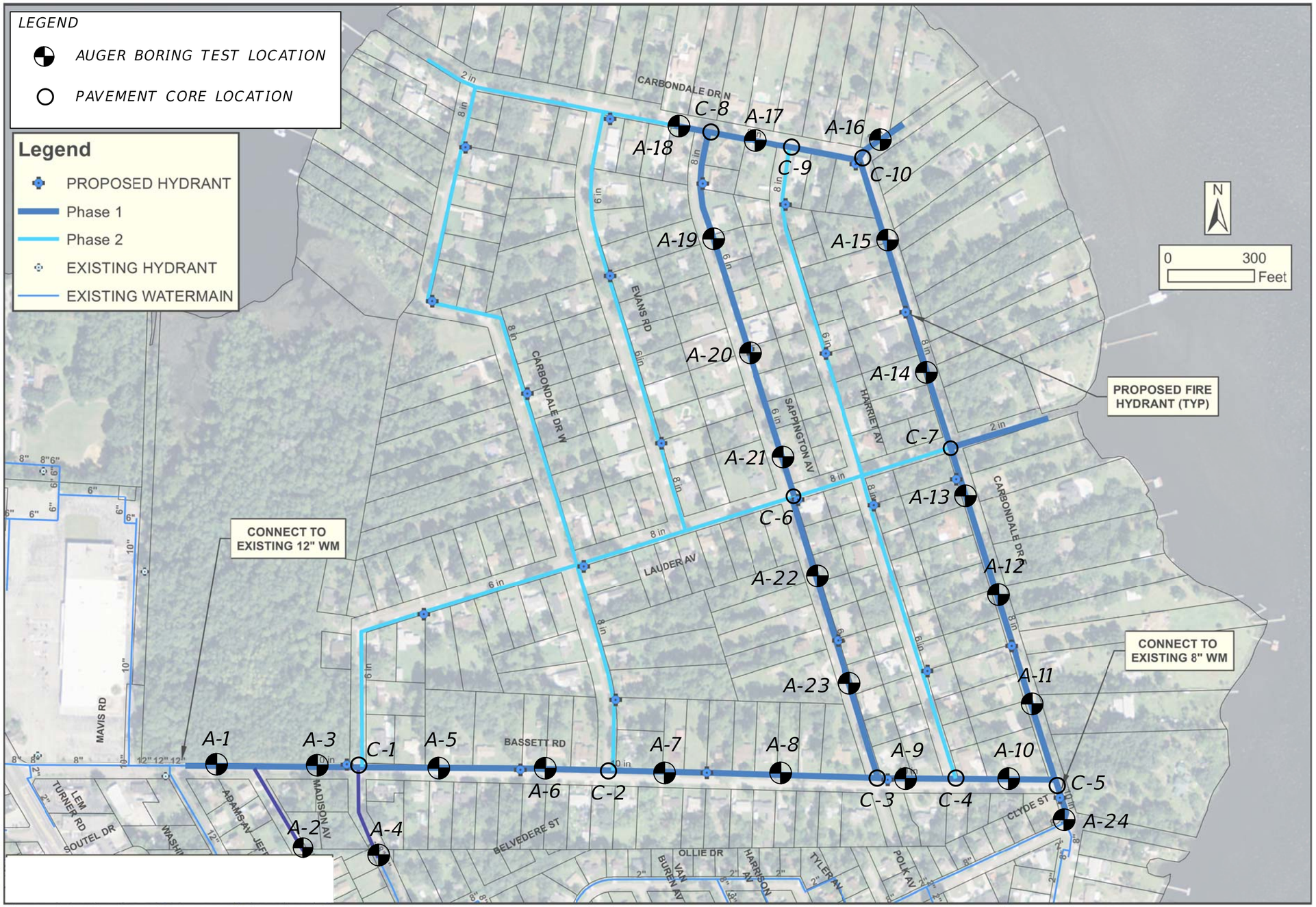

CSIGeo
GEOTECHNICAL·CMT·CEI
2394 ST. JOHNS BLUFF ROAD, S. SUITE 200
JACKSONVILLE, FLORIDA 32246

GEOTECHNICAL ENGINEERING
CONSTRUCTION MATERIAL TESTING
CONSTRUCTION ENGINEERING INSPECTION

FIELD EXPLORATION PLAN
RIVERVIEW WATER MAIN EXTENSION PHASE 1
DUVAL COUNTY, FLORIDA

General Subsurface Profiles

LEGEND

FINE SAND;
SLIGHTLY SILTY FINE SAND (A–3)

SANDY CLAY (A–6)

SILTY FINE SAND (A–2–4)

FINE SAND WITH SOME ROOTS;
ORGANIC SILTY FINE SAND (A–8)

(A–3) AASHTO SOIL CLASSIFICATION SYSTEM

A.T. AUGER BORING TERMINATION

GROUND WATER LEVEL AT TIME OF DRILLING

ESTIMATED SEASONAL HIGH GROUND WATER LEVEL

W	NATURAL MOISTURE CONTENT (%)
–200	FINES PASSING NO. 200 SIEVE (%)
OC%	ORGANIC CONTENT (%)
LL	LIQUID LIMIT
PI	PLASTICITY INDEX

NOTE:

LAYER BOUNDARIES ARE APPROXIMATE AND MAY VARY BETWEEN OR AWAY FROM BORING LOCATIONS.

A–1
LAT.: 30° 24' 38.33"N
LONG.: 81° 41' 12.89"W
DATE: 11–23–16

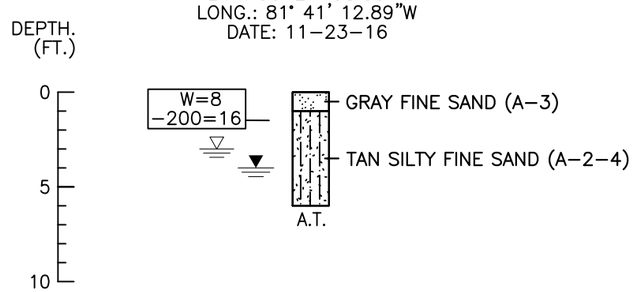

A–2
LAT.: 30° 24' 36.31"N
LONG.: 81° 41' 9.18"W
DATE: 11–23–16

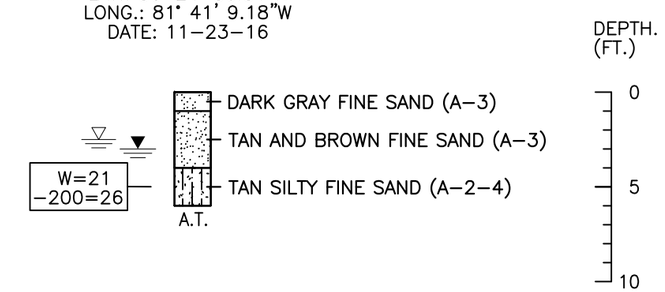

A–3
LAT.: 30° 24' 38.37"N
LONG.: 81° 41' 8.35"W
DATE: 11–23–16

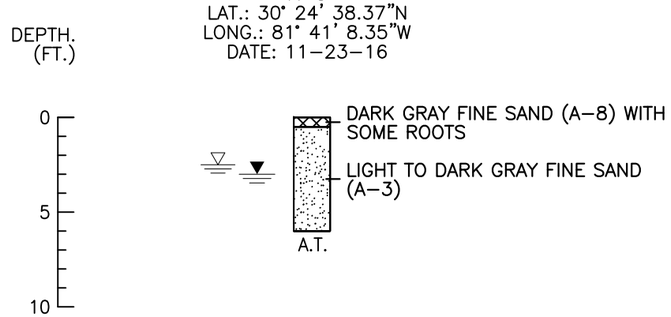

A–4
LAT.: 30° 24' 36.40"N
LONG.: 81° 41' 6.43"W
DATE: 11–23–16

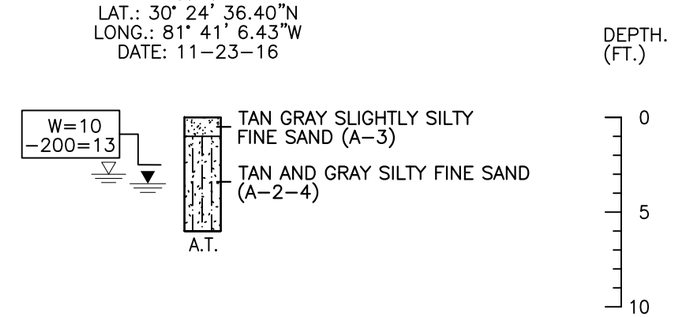

A–5
LAT.: 30° 24' 38.32"N
LONG.: 81° 41' 3.77"W
DATE: 11–22–16

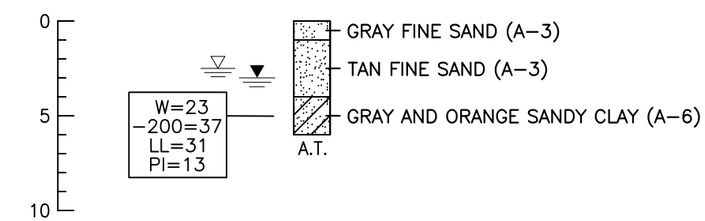

A–6
LAT.: 30° 24' 38.23"N
LONG.: 81° 40' 59.26"W
DATE: 11–22–16

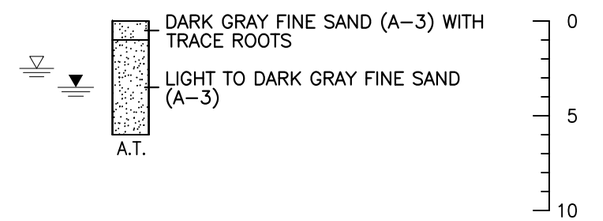

CSIGeo
GEOTECHNICAL · CMT · CEI
2394 ST. JOHNS BLUFF ROAD, S. SUITE 200
JACKSONVILLE, FLORIDA 32246

GEOTECHNICAL ENGINEERING
CONSTRUCTION MATERIAL TESTING
CONSTRUCTION ENGINEERING INSPECTION

GENERAL SUBSURFACE PROFILES

RIVERVIEW WATER MAIN EXTENSION PHASE 1
DUVAL COUNTY, FLORIDA

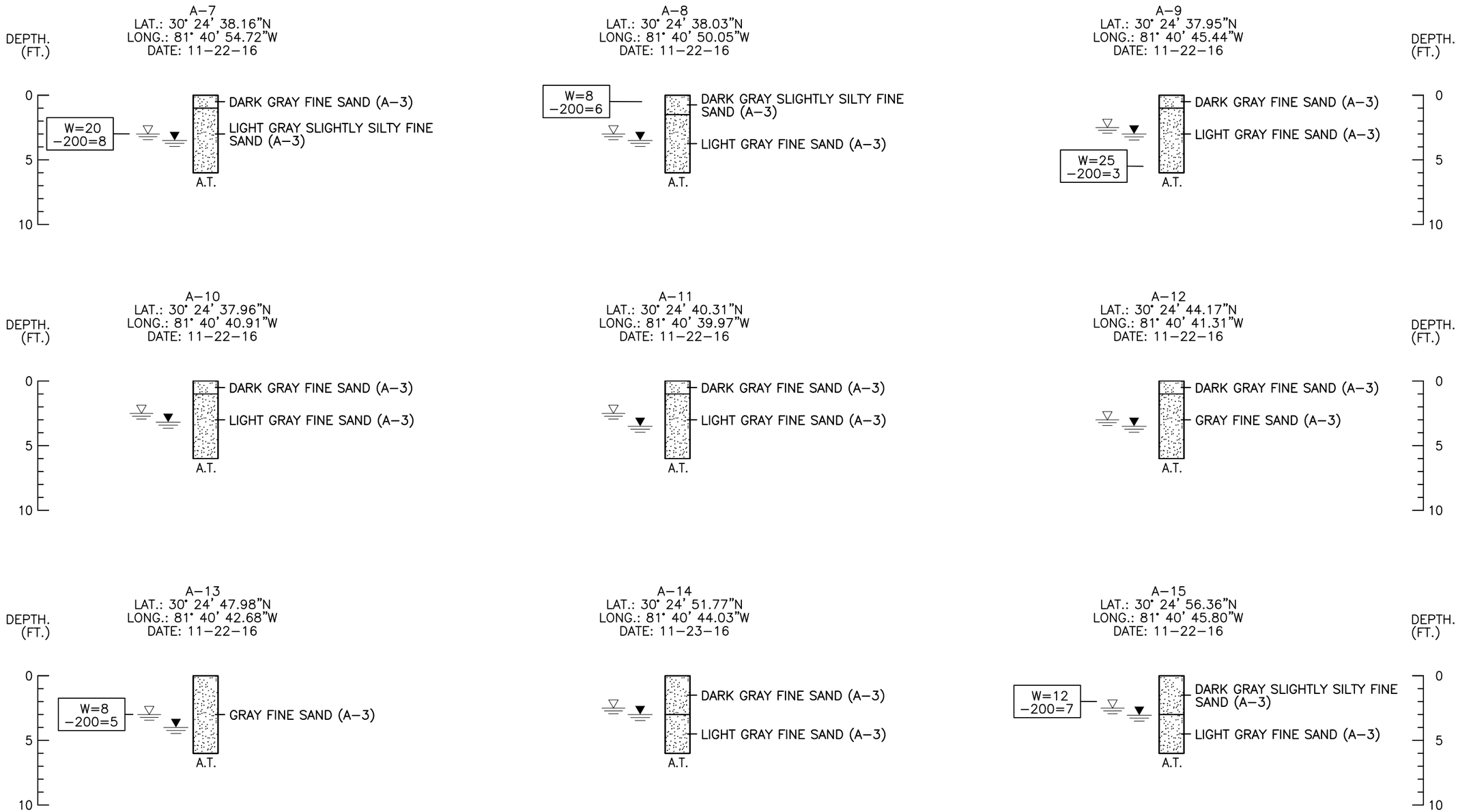

CSIGeo
GEOTECHNICAL · CMT · CEI
2394 ST. JOHNS BLUFF ROAD, S. SUITE 200
JACKSONVILLE, FLORIDA 32246

GEOTECHNICAL ENGINEERING
CONSTRUCTION MATERIAL TESTING
CONSTRUCTION ENGINEERING INSPECTION

GENERAL SUBSURFACE PROFILES

RIVERVIEW WATER MAIN EXTENSION PHASE 1
DUVAL COUNTY, FLORIDA

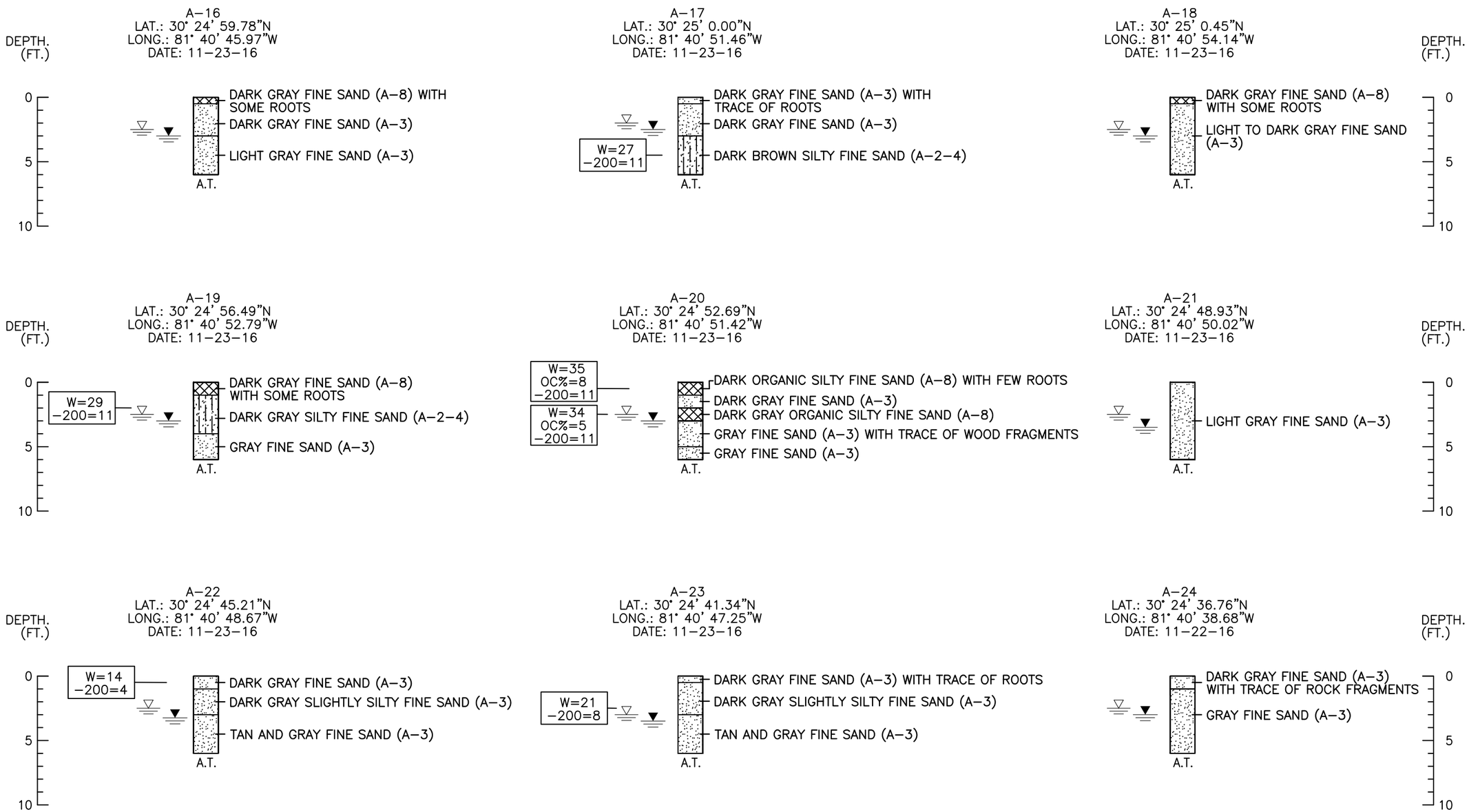

CSIGeo
GEOTECHNICAL · CMT · CEI
2394 ST. JOHNS BLUFF ROAD, S. SUITE 200
JACKSONVILLE, FLORIDA 32246

GEOTECHNICAL ENGINEERING
CONSTRUCTION MATERIAL TESTING
CONSTRUCTION ENGINEERING INSPECTION

GENERAL SUBSURFACE PROFILES

RIVERVIEW WATER MAIN EXTENSION PHASE 1
DUVAL COUNTY, FLORIDA

Summary of Laboratory Testing Results

SUMMARY OF LABORATORY TEST RESULTS

Riverview Water Main Extension Phase 1
Duval County, Florida

Boring No.	Sample No.	Approximate Depth (ft)	Natural Moisture Content (%)	Organic Content (%)	Percent Passing Sieve Size (%)						Atterberg Limits		Soil Classification Symbol
					#4	#10	#40	#60	#100	#200	LL	PI	
A-7	3	2.0 - 4.0	20							8			A-3
A-8	1	0.0 - 1.0	8							6			A-3
A-9	4	5.0 - 6.0	25							3			A-3
A-13	3	2.0 - 4.0	8							5			A-3
A-15	2	1.0 - 3.0	12							7			A-3
A-22	1	0.0 - 1.0	14							4			A-3
A-23	3	2.0 - 3.0	21							8			A-3
A-1	2	1.0 - 2.0	8							16			A-2-4
A-2	4	4.0 - 6.0	21							26			A-2-4
A-4	3	2.0 - 3.0	10							13			A-2-4
A-17	4	3.0 - 6.0	27							11			A-2-4
A-19	3	1.0 - 3.0	29							11			A-2-4
A-5	4	4.0 - 6.0	23							37	31	13	A-6
A-20	1	0.0 - 1.0	35	8						11			A-8
A-20	3	2.0 - 3.0	34	5						11			A-8

Existing Pavement System Thickness

EXISTING PAVEMENT SYSTEM THICKNESS

Riverview Water Main Extension Phase 1
Duval County, Florida

Road Name	Core No.	Approximate Location		Material Layer Thickness		Description & AASHTO Classification of Soil Beneath Pavement / Base
		Lat.	Long.	Asphalt (in)	Limerock (in)	
Intersection of Basset Rd. and Madison Ave.	C-1	30°24'38.30"N	81°41'6.75"W	4	-	Dark Gray Fine SAND (A-3)
Intersection of Basset Rd. and Carbondale Dr. W	C-2	30°24'38.19"N	81°40'56.88"W	8	-	Dark Gray Fine SAND (A-3)
Intersection of Basset Rd. and Sappington Ave.	C-3	30°24'37.96"N	81°40'46.30"W	3	3	Dark Gray Fine SAND (A-3)
Intersection of Basset Rd. and Harriet Ave.	C-4	30°24'37.96"N	81°40'42.98"W	5 1/2	-	Dark Gray Fine SAND (A-3)
Intersection of Basset Rd. and E Carbondale Dr.	C-5	30°24'37.77"N	81°40'39.01"W	7	1	Dark Gray Fine SAND (A-3)
Intersection of Lauder Ave. and Sappington Ave.	C-6	30°24'47.86"N	81°40'49.60"W	4 1/4	-	Light Gray Fine SAND (A-3)
Intersection of Lauder Ave. and E Carbondale Dr.	C-7	30°24'49.54"N	81°40'43.22"W	4	2	Gray Fine SAND (A-3)
Intersection of Carbondale Dr. N and Sappington Ave.	C-8	30°25'0.26"N	81°40'53.10"W	3	-	Dark Gray Fine SAND (A-3)
Intersection of Carbondale Dr. N and Harriet Ave.	C-9	30°24'59.77"N	81°40'49.84"W	4 1/4	3	Dark Gray Fine SAND (A-3)
Intersection of Carbondale Dr. N and E Carbondale Dr.	C-10	30°24'59.27"N	81°40'46.66"W	5	-	Dark Gray Fine SAND (A-3)

Riverview Target Area
Conceptual Watermain Layout & Potential Phasing

PROPOSED WATER MAINS ARE SHOWN ON THIS PLAN FOR DISCUSSION PURPOSES ONLY AND ARE CONCEPTUAL IN NATURE. ALL WATER MAIN SIZES AND LOCATIONS ARE PRELIMINARY AND DO NOT DEPICT FINAL DESIGN CONFIGURATIONS. ULTIMATE PROJECT LIMITS AND PROJECT SCHEDULE TO BE DETERMINED BY THE CITY OF JACKSONVILLE.

Legend

- PROPOSED HYDRANT
- Phase 1
- Phase 2
- EXISTING HYDRANT
- EXISTING WATERMAIN

N

0 300 Feet

PROPOSED FIRE HYDRANT (TYP)

CONNECT TO EXISTING 12" WM

CONNECT TO EXISTING 8" WM

CARBONDALE DR N
CARBONDALE DR W
CARBONDALE DR E
EVANS RD
SAPPINGTON AV
HARRIET AV
LAUDER AV
BASSETT RD
MAVIS RD
TURNER RD
LEM
SOUTEL DR
ADAMS AV
MADISON AV
BELVEDERE ST
OLLIE DR
VAN BUREN AV
HARRISON AV
TYLER AV
POLK AV
CLYDE ST

Disclaimer of Liability: Accuracy of the data contained on this map is contingent upon the source information as compiled by various agencies both internal and external to JEA. Maps are provided "as is" without warranty or any representation of accuracy, timeliness, completeness, or financial commitment. JEA assumes no legal responsibility for the information contained on this map.

JEA
W/WW System Planning
21 W Church St, Tower - 4
Jacksonville, Florida 32202
November 3, 2015

RIVERVIEW TARGET AREA
Conceptual Watermain Layout and Potential Phasing

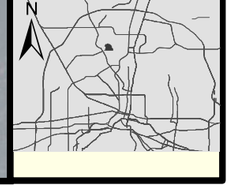

Key to Soil Classification

KEY TO SOIL CLASSIFICATION

Particle Size Identification (Unified Soil Classification System)

Boulders:	Diameter exceeds 8 inches
Cobbles:	3 to 8 inches diameter
Gravel:	Coarse - 3/4 to 3 inches in diameter
	Fine - 4.76 mm to 3/4 inch in diameter
Sand:	Coarse - 2.0 mm to 4.76 mm in diameter
	Medium - 0.42 mm to 2.0 mm in diameter
	Fine - 0.074 mm to 0.42 mm in diameter

Modifiers

These modifiers provide our estimate of the amount of fines (silt or clay size particles) in soil samples.

Approximate Fines Content	Modifiers
5% Fines 12%	Slightly silty or slightly clayey
12% Fines 30%	Silty or clayey
30% Fines 50%	Very silty or very clayey

These modifiers provide our estimate of shell, rock fragments, or roots in the soil sample.

Approximate Content, By Weight	Modifiers
< 5%	Trace
5% to 10%	Few
15% to 25%	Little
30% to 45%	Some
50% to 100%	Mostly

These modifiers provide our estimate of organic content in the soil sample.

Organic Content	Modifiers
1% to 3%	Trace
3% to 5%	Slightly Organic
5% to 20%	Organic
20% to 75%	Highly Organic (Muck)
> 75%	Peat

Field and Laboratory Test Procedures

FIELD AND LABORATORY TEST PROCEDURES

FIELD TEST PROCEDURES

Auger Borings – The auger borings were advanced by the use of a truck mounted auger drill rig. The soils encountered were identified in the field from the cuttings brought to the surface by the augering process. Representative soil samples were placed in glass jars and transported to our laboratory where they were examined by a geotechnical engineer to confirm field classifications.

LABORATORY TEST PROCEDURES

Natural Moisture Content – The water content is the ratio, expressed as a percentage, of the weight of water in a given mass of soil to the weight of the solid particles. This test was conducted in the general accordance with FM 1-T 265.

Percent Organic Content – This test is based on the percent of organics by weight of the total sample. This test was conducted in accordance with FM I - T 267.

Percent Fines Content – To determine the percentage of soils finer than No. 200 sieve, the dried samples were washed over a 200 mesh sieve. The material retained on the sieve was oven dried and then weighed and compared with the unwashed dry weight in order to determine the weight of the fines. The percentage of fines in the soil sample was then determined as the percentage of weight of fines in the sample to the weight of the unwashed sample. This test was conducted in accordance with ASTM D 1140.

Plasticity (Atterberg Limits) - The soil's Plastic Index (PI) is bracketed by the Liquid Limit (LL) and Plastic Limit (PL). The LL is the moisture content at which the soil flows as a heavy viscous fluid and is determined in general accordance with FM 1-T 089. The PL is the moisture content at which the soil begins to crumble when rolled into a small thread and is also determined in general accordance with FM 1-T 090. The water-plasticity ratio is computed from the above test data. This ratio is an expression comparing the relative natural state of soil with its liquid and plastic consolidation characteristics.

CSI Geo

Geotechnical · CMT · CEI

SERVICES OFFERED

Geotechnical & Foundations Engineering

Construction Materials Testing (CMT)

Construction Engineering & Inspection (CEI)

2394 St. Johns Bluff Road, Suite 200. • Jacksonville, FL 32246
(904) 641-1993 Phone • (904) 645-0057 Fax
www.csi-geo.com