TECHNICAL SPECIFICATIONS ISSUED FOR BID

Bradley Road Wastewater Booster Pump Station

10477 Bradley Road
Jacksonville, FL 32246

JEA

July 2019

CDM Smith

© 2019 CDM Smith
All Rights Reserved

TABLE OF CONTENTS

DIVISION 01 GENERAL REQUIREMENTS

01010 Summary of Work
01014 Construction Sequence
01045 Cutting, Coring and Patching
01046 Control of Work
01050 Project Controls (Surveying)
01110 Environmental Protection Procedures
01170 Special Provisions
01180 Pipe Penetrations
01200 Project Meetings
01300 Submittals
01310 Construction Scheduling
01322 Photographic Documentation
01410 Testing and Testing Laboratory Services
01445 Pipeline Testing and Cleaning
01465 Equipment Testing and Startup
01500 Temporary Facilities
01562 Dust Control
01580 Project Identification and Signs
01600 Delivery, Storage and Handling
01700 Contract Closeout
01710 Cleaning
01720 Project Record Documents
01730 Operation and Maintenance Data and Asset Management
01731 Asset Management Data
01740 Warranties and Bonds

DIVISION 02 SITEWORK

02050 Demolition and Modifications
02100 Site Preparation
02140 Dewatering and Drainage
02200 Excavation and Earthwork
02202 Subgrade Preparation
02210 Site Grading
02221 Trenching, Backfilling and Compaction
02230 Granular Materials
02251 Termite Control
02276 Temporary Erosion and Sedimentation Control
02500 Surface Restoration
02513 Concrete Paving Restoration
02515 Concrete Walkways
02605 Precast Manholes and Structures
02616 Sewage Force Mains and Yard Piping
02630 Storm Sewers and Structures
02640 Valves, Hydrants and Appurtenances

02667 Utility Relocation, Connections to and Work on the Existing System
02730 Aggregate Base Courses
02750 Concrete Pavement
02830 Chain Link Fences and Gates
02932 Sodding and Seeding

DIVISION 03 CONCRETE

03100 Concrete Formwork
03200 Concrete Reinforcement
03250 Concrete Joints and Joint Accessories
03300 Cast-In-Place Concrete
03350 Concrete Finishes
03390 Under-Slab Vapor Retarders
03480 Precast Concrete Building
03600 Grout
03740 Modifications to Existing Concrete

DIVISION 04 MASONRY (NOT USED)

DIVISION 05 METALS

05500 Miscellaneous Metal

DIVISION 06 WOOD AND PLASTICS

06100 Rough Carpentry

DIVISION 07 THERMAL AND MOISTURE PROTECTION

07920 Joint Sealants

DIVISION 08 DOORS AND WINDOWS

08220 Fiberglass Reinforced Plastic Doors and Aluminum Frames
08710 Door Hardware

DIVISION 09 FINISHES

09901 Surface Preparation and Shop Prime Painting
09902 Painting

DIVISION 10 SPECIALTIES

10400 Signage

DIVISION 11 EQUIPMENT

11306 Submersible Solids Handling Pumps
11313 Vacuum Priming System

DIVISION 12 FURNISHINGS

12484 Floor Mats

DIVISION 13 SPECIAL CONSTRUCTION (NOT USED)

DIVISION 14 CONVEYING SYSTEMS (NOT USED)

DIVISION 15 MECHANICAL

15050 Piping - General Requirements
15066 Stainless Steel Piping and Fittings
15072 Ductile Iron Pipe and Fittings (Above Grade)
15100 Valves
15120 Piping Specialties
15140 Pipe Hangers and Supports
15400 Plumbing - General Provisions
15500 HVAC
15600 Fuel System
15990 Testing, Adjusting and Balancing

DIVISION 16 ELECTRICAL

16000 Electrical Work - General
16100 Underground Electrical Work
16150 Electric Motors
16200 Engine Generator - Diesel
16400 Electrical Apparatus
16600 Grounding and Lightning Protection
16900 Instrumentation and Control
16950 PLC Programming

END OF TABLE OF CONTENTS

THIS PAGE INTENTIONALLY LEFT BLANK

© 2019 CDM Smith
All Rights Reserved

SECTION 01010
SUMMARY OF WORK

PART 1 GENERAL

1.01 LOCATION OF WORK

A. The work of this Contract is located at the Bradley Road Pump Station at 10477 Bradley Road, Jacksonville, Duval County, Florida.

1.02 SCOPE OF WORK

A. Furnish all labor, materials, equipment and incidentals required and complete all work required by these Specifications, JEA's Water and Sewer Standards Manual, and as shown on the Drawings to construct a wastewater booster pump station at the Bradley Road Pump Station and demolish the existing pump station.

B. The Work includes, but is not necessarily limited to, the following:

1. Mobilization/Demobilization, General Requirements, Bonds and Insurance.

2. Site Work:
   a. Erosion and sedimentation control
   b. Tree removal
   c. Demolition of abandoned facilities
   d. Site restoration including grassing, and other restoration
   e. Grading and drainage
   f. Pavement repair and mill and overlay as indicated on the Drawings
   g. Concrete pavement installation between pump station slab and existing road
   h. Removal of approximately 1,520 SF of existing asphalt road and installation of sod
   i. Fence replacement and extension.

3. Pump Station Construction at the Bradley Road Pump Station:
   a. Construction of the pump station concrete slab and pump pedestals.
   b. Furnishing and installation of six (6) primary dry-pit submersible pumps driven by variable frequency drives.
   c. Furnishing and installation of two (2) jockey dry-pit submersible pumps driven by variable frequency drives.
   d. Furnishing and installation of two (2) flow meters in underground vaults.
   e. Furnishing and installation of two (2) influent pressure sensing vaults.
   f. Furnishing and installation of above and below grade mechanical piping.
   g. Furnishing and installation of electrical building and associated equipment.
   h. Furnishing and installation of generator and fuel tank.
   i. Furnishing and installation of two new fuel tanks for diesel driven pumps.
   j. Relocation and installation of two diesel engine driven emergency pumps and all associated components.
   k. Furnishing and installation of vacuum priming system for diesel driven pumps.
   l. Installation of transformer.
   m. Installation of pump station valves, appurtenances, and instrumentation.
   n. Refurbishment of two existing diesel driven pumps and engines by factory certified technician using the allowance listed in Item 4 of the Bid Form.

4. Demolition of existing pump station.
5. Connection to existing influent and discharge force mains including all necessary coordination with Owner, MOT, permits, and roadway restoration.
6. Coordination with Owner for new electrical service and transformer.
7. Force Mains and Yard Piping
   a. Installation of yard piping and valves as shown on the Drawings and as specified in the Specifications.
   b. Dewatering system and fittings as required.
8. Pump station startup, testing, backup systems testing.
9. Permits including Notice of Intent, Notice of Demolition, building permit for pre-fabricated building, fuel tank permits, dewatering activities permit, building department permits, and other permits which are necessary. Secured permit includes FDEP wastewater facilities permit.

C. Substantial Completion: To satisfy the definition of Substantial Completion, all on-site Work including punch list items required by the Contract have been completed to where the Contractor can vacate the site and only those elements of submittal and closeout nature remain for the attainment of Final Completion and as described below. Three substantial completions are anticipated: Milestone 1 Substantial Completion - pumps tested, accepted, and booster station in service (beneficial use of new booster station), Milestone 2 Substantial Completion – second electrical fee energized and existing station de-energized, Milestone 3 Project Substantial Completion – demolition of existing station, final site work, and site restoration.

D. Final Completion: The last stage of construction shall be final construction and shall include the final remaining items subject to Engineer's approval as well as items listed in Section 01700 – Contract Closeout.

1.03 WORK SEQUENCE

A. Perform Work in sequence listed below to accommodate Owner's occupancy during the construction period and to ensure completion of the Work in the Contract Time. Completion dates of the various stages shall be in accordance with the approved construction schedule submitted by the Contractor.

1. Perform Work in sequence to prevent any shutdowns to the wastewater pump station during construction activities.

2. Perform work in general accordance with construction sequence provided in Section 01014.

3. The Contractor shall prepare and submit a connection plan that addresses the required connections and system outages.

1.04 CONTRACTOR'S USE OF PREMISES

A. Contractor shall limit the use of the premises for his/her Work and for storage to allow for:

1. Work by other contractors.

2. Owner occupancy

B. Coordinate use of premises with other Owner.

C. Contractor shall assume full responsibility for security of all his/her and his/her subcontractors' materials and equipment stored on the site.

D. If directed by the Owner, move any stored items which interfere with operations of Owner or other contractors.

E. Obtain and pay for use of additional storage or work areas if needed to perform the Work.

1.05 OWNER OCCUPANCY

A. Owner will occupy premises during performance of the work for the conduct of its normal operations. Coordinate all construction operations with Owner to minimize conflict and to facilitate Owner usage.

END OF SECTION

© 2019 CDM Smith
All Rights Reserved

THIS PAGE INTENTIONALLY LEFT BLANK

© 2019 CDM Smith
All Rights Reserved

SECTION 01014
CONSTRUCTION SEQUENCE

PART 1 GENERAL

1.01 SITE CONDITIONS

A. Several areas of construction under this Contract need to be coordinated with the Operations Personnel and accomplished in a logical order to maintain continuous operation of the existing pump station through completion and acceptance of the new pump station by the Engineer and Owner, and to allow construction to be completed within the time allowed by the Contract Documents.

B. When access through operations areas must be disrupted, Contractor shall provide alternate acceptable access for Operations Personnel and their vehicles and equipment.

C. Various interconnections will depend on the closure of various valves and gates. Many of these valves and gates are old and may not seal properly. Contractor shall coordinate with Operations Personnel sufficiently in advance of any such closure to allow the Owner to implement corrective measures as necessary to attain the shut-off needed to perform the work with no additional cost to the Owner, and no extension to the Contract Time, and without interrupting pump station operations.

D. Various interconnections within the plant may require temporary partial power shutdown. Contractor shall make every effort necessary to minimize the shutdown time and coordinate with the Operations Personnel and/or utility authorities prior to attempting any such power shutdown. Furthermore, Contractor shall provide any corrective measure or temporary facilities necessary to perform the work at no additional cost to the Owner, and no extension to the Contract Time, and without interrupting pump station operations.

E. When the work requires an existing facility to be taken out of operation, temporarily or permanently, Contractor shall notify the Engineer and Operations Personnel at least two weeks in advance, unless more advanced notice is specified elsewhere.

F. Where water is required for preoperational testing or other use, Contractor shall purchase it from the Owner. A temporary construction water meter shall be obtained by the Contractor installed on a branch of the pump station water service with proper backflow prevention measures. Contractor shall coordinate the location of the water meter with Owner. Contractor shall pay all fees and water usage charges.

G. During testing and start-up, Contractor shall make available the manpower, equipment and manufacturer's representatives required to make all necessary adjustments and to provide all necessary training for Owner Personnel prior to acceptance by the Engineer and Owner for placing the systems into service. Refer to Section 01465 for detailed testing and start-up requirements.

PART 2 PRODUCTS (NOT USED)

PART 3 EXECUTION

3.01 CONSTRUCTION CONSTRAINTS

A. Following is a list of constraints that the Contractor shall include in the cost of the Work and shall implement into their overall construction schedule. This list does not release the Contractor from the responsibility to coordinate the Work in a manner that will ensure project completion within the Contract Times.

1. Contractor shall coordinate and carry out the Work in a manner that maintains full functionality and operations of the existing pump station, except as allowed by the following constraints for service interruptions, until the new pump station is complete and tested and accepted by the Engineer and Owner as ready to place into service: including all electric-driven and diesel-driven pumps and appurtenances; all primary and standby power, building and controls systems; primary utility power from the new (east) utility transformer; all suction piping and valves and appurtenances; and all discharge piping valve and appurtenances necessary to allow discharge through the east discharge piping system.

2. Prior to submitting shop drawings for the tie-in to the existing 36” influent force main, Contractor shall coordinate with Operations Personnel and perform exploratory excavations in the area to verify:
   a. Location, restraining systems and functionality of the existing 36” gate valve. Engineer will direct Contractor to implement the 36-Inch Line Stop Contingency below, if these investigations demonstrate that the existing 36” gate valve cannot provide isolation for the ultimate demolition of the existing pump station.
   b. Suitable location for the tapping saddle connection, and existing pipe material and outside diameter at this location.
   c. Contractor shall allow five working days in their schedule for completing these investigations to account for varying flow rates that could affect Owner Personnel’s efforts to assess functionality of the existing 36” gate valve.

3. Prior to submitting shop drawings for the tie-in to the existing 30” discharge force main, and for cutting-in the new 30” plug valve in the existing electric-driven pump station discharge force main, Contractor shall coordinate with Operations Personnel and perform exploratory excavations in the areas to verify:
   a. Location, restraining systems at the tie-in point, and functionality of the existing 30” gate valve adjacent to the tie-in.
   b. Existing pipe material and outside diameter at locations of sleeves or transition couplings needed to complete the tie-in work and cut-in work.

4. The work to tie-in to the existing 30” discharge force main, and to cut-in the new 30” plug valve in the existing electric-driven pump station discharge force main shall be done during a single outage of the existing electric-driven pumps, and with all existing diesel-driven pumps in service. The existing electric-driven pumps may be shut down for a maximum of eight hours and only during periods of low flow to be verified by Owner’s Operations Personnel. Contractor shall provide the Engineer and Owner 30 days advance notice of this work to allow the Owner to prepare all existing diesel-driven pumps for operation during the outage, and to complete repairs, if necessary, and to exercise the adjacent 30” gate valve that must be closed by Operations Personnel to isolate this portion of the Work.

5. The Contractor shall coordinate their work and provide adequate workforce, equipment and tools to complete the work without interruption of service of the existing pump station All costs and time for the continuous operation of the pump station at the existing capacity shall be included in the Contractor's base price and baseline schedule for the Work.

6. During relocations of existing diesel-driven pumps and installation of new fuel systems, Contractor shall provide temporary diesel-driven pumps and fuel systems of equivalent capacity and performance to be installed and tested and accepted by the Engineer and Owner within 24 hours after disconnecting the existing equipment, and to remain in service until the relocated equipment is installed, tested and accepted by the Engineer and Owner for placing into service. Contractor shall provide all maintenance and repair for the temporary diesel-driven systems, as necessary to limit downtime to not more than 24 hours. Temporary diesel-driven pumping systems that cannot be installed, tested and accepted by the Engineer and Owner for placing into service within 24 hours of disconnecting the existing equipment shall be disconnected and removed and the existing equipment reinstalled at no change to the Contract Price or Contract Times. Fuel for temporary diesel-driven pumps shall be paid for and provided by the Owner. Contractor shall be responsible to configure the temporary systems to allow safe access for Operations Personnel and for fueling, maintenance and repairs.

7. The relocated pumps will require removal of the venturi priming system and installation of a new vacuum priming system as described in Section 11313. Coordinate with the diesel-driven pump manufacturer for proper removal of the existing venturi priming system and salvage to Owner. See standard pump manufacturer details for removal of the venturi priming system at the end of this section.

3.02 CONSTRUCTION SEQUENCE

A. Following is a proposed sequence of construction complying with all the above construction constraints. The Contractor is responsible for their own construction sequencing in compliance with the construction constraints, and for the coordination of resources, trades, and work spaces necessary to complete the Work within the Contract Times.

1. Phase I – Mobilization, site preparation and yard piping
   a. Mobilize, relocate or remove existing fencing and set up temporary fencing as needed, and set up erosion control and environmental protection measures and temporary construction facilities.
   b. Coordinate with Operations Personnel and perform exploratory excavations at the influent force main tie-in, the discharge force main tie-in, and the plug valve cut-in location on the existing electric-driven pump discharge force main. Engineer will direct Contractor to implement the 36-Inch Line Stop Contingency below, if the influent force main investigations demonstrate that the existing 36" gate valve cannot provide isolation for the ultimate demolition of the existing pump station.
   c. Demolish the abandoned wet well and manhole and associated piping.
   d. Abandon and close existing test well per regulatory requirements.
   e. Remove existing trees as indicated on the drawings.
   f. Modify existing slab and relocate existing fence and gates at the existing odor control system as needed for new yard piping installation.
   g. Coordinate with Operations Personnel and remove the small existing diesel-driven pony pump and fuel tank and piping as needed for new yard piping and pump station

construction. Turn over existing pony pump to Owner. Demolish and properly dispose of existing pony pump fuel tank and piping..

h. Install and pressure test new yard suction and discharge force main piping, valves and appurtenances, including the influent force main tapping sleeve and valve.
i. Install underground ductbank for new (east) electric power feed.

2. Phase II – Construct new electric-driven booster pump station
   a. Install under-slab facilities for the new booster pump station and the new diesel-driven pump station slab
   b. Construct new booster pump station, install new electrical gear, pumps, piping, valves, controls and HVAC, and energize via new (east) power service.
   c. Construct new slab for diesel-driven pump station, and install and connect new emergency generator and fuel tank.
   d. Complete the tie-in connection for the 30" east discharge force main, and cut-in new 30" plug valve in the existing electric-driven pump station force main.
   e. Coordinate manufacturer's representatives, and coordinate with Operations Personnel to open and close the existing influent 36" gate valve as necessary (or coordinate as indicated in the 36-Inch Line Stop Contingency below if that measure is implemented) for all testing and Owner-personnel training that needs to be completed prior to starting the 30-day Operational Test for the new (electric-driven) booster pump station.
   f. Perform 30-day Operational Test for the New (electric-driven) Booster Pump Station.

3. Phase III – Construct new diesel-driven booster pump station
   a. After successful completion of the 30-day Operational Test for the new electric-driven booster pump station, coordinate with Operations Personnel to relocate the two existing diesel-driven primary pumps and the installation of the associated new fuel tanks to the new diesel-driven booster pump station pad, and connect stainless steel piping and pump controls. Install and test new fuel piping and controls, and provide fuel for testing.
   b. Coordinate with Operations Personnel to adjust the electric-driven booster pumps, and conduct performance testing for the relocated diesel-driven primary pumps over the full range of flows.
   c. After successful completion of performance testing for the relocated diesel-driven primary pumps, conduct 14-day Operational Test for the new combined electric-driven and diesel-driven booster pump station.

4. Phase IV – Redundant power and discharge force main connections, demolition and restoration
   a. After successful completion of the 14-day Operational Test for the new combined electric-driven and diesel-driven booster pump station, coordinate with the power utility to disconnect power to the existing electric-driven pump station, and complete power feed from the existing transformer to the new electric-driven booster pump station. Coordinate with Operations Personnel to complete terminations and start up and test the new, redundant power feed.
   b. After successful completion of the 14-day Operational Test for the new combined electric-driven and diesel-driven booster pump station, demolish the underground discharge piping for the existing electric-driven pump station, and complete installation of the west discharge force main for the new combined electric-driven and diesel-driven booster pump station, pressure test and coordinate with Operations Personnel to place into service.

c. After successful completion of the 14-day Operational Test for the new combined electric-driven and diesel-driven booster pump station, remove piping downstream of existing 36” gate valve on the 36” influent force main and install MJ cap, or blind flange if valve is flanged (or cut and cap as indicated in the 36-Inch Line Stop Contingency below if that measure is implemented).
d. After successful completion of the 14-day Operational Test for the new combined electric-driven and diesel-driven booster pump station, demolish: the existing old electric-driven pump station and building, including the influent collection box and splitter box, and the remaining fuel tanks and fuel piping; the existing odor control system and fence and gates and concrete slab, the existing concrete slabs for the diesel-driven pumps and fuel tanks, the existing influent piping for the diesel-driven pony pump, the existing discharge piping; and all existing concrete pavement.
e. Complete new storm drainage, and final grading and compaction.
f. Complete new concrete pavement, landscaping, sod, and fence and gates.
g. Complete final cleaning and punch list and demobilize.

3.03 36-INCH LINE STOP CONTINGENCY

A. Following is the scope of Work to be included in the Contractor’s bid for the 36-Inch Line Stop Contingency item, and to be implemented if so directed by the Engineer following exploratory excavations as described in Paragraph 3.01A.2 above. The Contractor is responsible for the coordination of resources, trades and work spaces necessary to complete this contingency work within the Contract Times.

1. Submit shop drawings for approval in accordance with Section 01300 for: stainless steel tapping sleeve meeting the requirements of Section 02640; and installation plan including complete installation drawings, and detail drawings of pipe tapping equipment, line stopping equipment, supporting equipment, completion plug and blind flange in accordance with Section 13500.

2. Furnish labor, materials, equipment and accessories for excavating, shoring, dewatering and tapping the 36” influent force main and inserting the line stop in support of testing and start-up activities for the new electric-driven booster pump station, as described above in Phase II of the Construction Sequence, and leaving the line stop in place and securing the excavation through completion of the 14-day Operational Test for the new combined electric-driven and diesel-driven booster pump station as described above in Phase III of the Construction Sequence. As an alternative to leaving the line stop throughout this interval, the Contractor may propose to furnish and install a new, restrained 36” gate valve or plug valve and ductile iron solid sleeve and valve box, in accordance with the specifications and JEA standards, downstream of the line stop, and then remove the line stop and temporary tapping valve, and install the completion plug and blind flange after the alternate valve and sleeve are installed.

3. Furnish qualified labor, materials and equipment to insert and remove the line stop, or to open and close the alternative valve in support of the testing and start-up activities and 30-day Operational Test for the new electric-driven booster pump station, as described above in Phase II of the Construction Sequence, and in support of the testing and start-up activities new diesel-driven booster pump station and the 14-day Operational Test for the new combined electric-driven and diesel-driven booster pump station as described above in Phase III of the Construction Sequence. The qualified labor, materials and equipment for

this work shall be available throughout this interval to remove or insert the line stop, or to open or close the alternative valve within four hours' notice.

4. After successful completion of the 14-day Operational Test for the new combined electric-driven and diesel-driven booster pump station, furnish labor, materials and equipment to cut the existing 36" influent force main downstream of the line stop and furnish and install a restrained 36" MJ cap in accordance with the specifications and JEA standards, and then remove the line stop and temporary tapping valve and install the completion plug and blind flange; or to cut the existing 36" influent force main downstream of the alternative valve and furnish and install a 36" MJ plug in accordance with the specifications and JEA standards.

5. Furnish labor, material, and equipment to remove shoring and dewatering, and backfill and compact excavations associated with this contingency work.

Removing Venturi Priming System for Flooded Suction Applications

When using a Dri-Prime® pump in a flooded suction condition, the venturi priming system must be removed to prevent possible damage to the air compressor or engine.

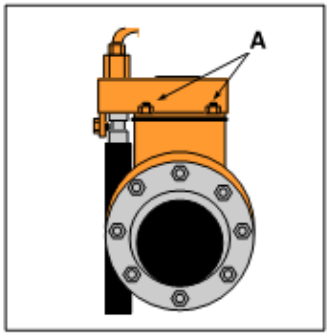

Removing venturi priming system:

1. Remove four nuts (A) on venturi hat assembly.
2. Remove venturi priming system and secure against lifting bale or engine leg (use wire tie).
3. Place blanking plate on priming chamber on top of pump inlet.
4. Replace four nuts (A) on studs securing blanking plate to pump inlet.

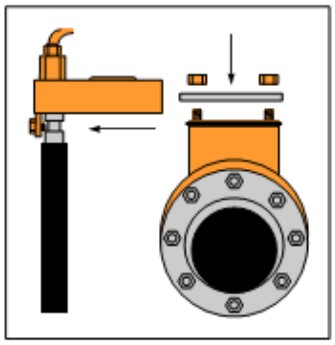

Follow directions on reverse side of page for start up and shut down of Dri-Prime® pump in a flooded suction application.

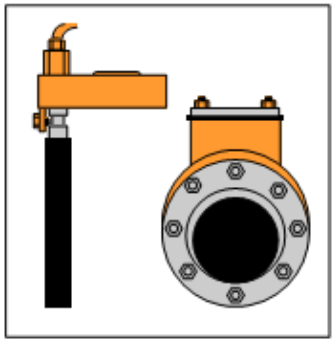

Note: Pump will be incapable of self-priming while venturi priming system is removed.

END OF SECTION

© 2019 CDM Smith
All Rights Reserved

SECTION 01045
CUTTING, CORING AND PATCHING

PART 1 GENERAL

1.01 SCOPE OF WORK

A. This Section covers the cutting, coring, rough and finished patching of holes and openings Holes and opening maybe in existing construction, or in parts of new construction. Procedures for cutting and patching will be the same for either condition.

B. All cutting, coring, and rough patching shall be performed by the Contractor. Finish patching shall be the responsibility of the Contractor and shall be performed by the trade associated with the application of the particular finish.

C. Provide all cutting, fitting and patching, including attendant excavation and backfill, required to complete the work or to:

1. Make its several parts fit together properly.

2. Uncover portions of the work to provide for installation of ill-timed or improperly scheduled work.

3. Remove and replace defective work.

4. Remove and replace work not conforming to requirements of Contract Documents.

5. Remove samples of installed work as specified for testing.

6. Provide penetrations of structural surfaces and materials for installation of piping, ductwork, equipment and electrical conduit.

7. Provide penetrations of non-structural surfaces and materials for installation of piping, ductwork, equipment and electrical conduit. The determination of what is a nonstructural surface or material shall be made by the Engineer.

8. Remove, install, or relocate materials or equipment.

1.02 RELATED WORK

A. Summary of Work is included in Section 01010.

B. Site work is included in Division 2.

C. Concrete is included in Division 3.

D. Pipe penetrations and assemblies are included in Section 01180.

1.03 SUBMITTALS

A. Submit, in accordance with Section 01300, a written request prior to executing any cutting or alteration which is not shown or detailed on the contract documents which affects or requires:

1. Cutting structural members.

2. Holes drilled in beams or other structural members.

3. Work of the Owner or any separate contractor.

4. Structural value or integrity of any element of the project.

5. Integrity or effectiveness of weather-exposed or m-oisture-resistant elements or systems.

6. Efficiency, operational life, maintenance or safety of operational elements.

7. Visual qualities of sight-exposed elements.

B. Request shall include:

1. Identification of the project.

2. Description of affected work.

3. The reason for cutting, alteration or excavation.

4. Effect on work of Owner or any separate contractor, or on structural or weatherproof integrity of project.

5. Description of proposed work:
   a. Method and extent of cutting, patching, alteration, or excavation.
   b. Trades who will execute the work.
   c. Products proposed to be used.
   d. Extent of refinishing to be done.

6. Alternatives to cutting and patching.

7. If the work is considered out of scope, provide a cost proposal.

8. Confirmation of coordination with any separate contractor whose work will be affected.

9. Related shutdown requests if required to do the work.

10. Request for hot work permit if required to do the work.

C. Submit written notice to the Engineer designating the date and the time the work will be uncovered.

D. When a written request is required, do not proceed with the work until a written notice to proceed is received from the Engineer.

PART 2 PRODUCTS

2.01 MATERIALS

A. Comply with specifications and standards for each specific product involved. Where there is no equivalent specification, the Contractor shall notify the Engineer who will provide a specification for the materials to be used.

B. Concrete and grout for rough patching shall be as specified in Divisions 3.

C. Materials for finish patching shall be equal to those of adjacent construction. Where existing materials are no longer available, use materials with equivalent properties and that will provide the same appearance. The materials are to be approved by the Engineer prior to their use.

PART 3 EXECUTION

3.01 INSPECTION

A. Inspect existing conditions of project, including elements subject to damage or to movement during cutting and patching.

B. After uncovering work, inspect conditions affecting installation of products, or performance of work.

C. Report unsatisfactory or questionable conditions to the Engineer in writing; do not proceed with work until the Engineer has provided further instructions.

3.02 PREPARATION

A. Provide adequate temporary support as necessary to assure structural value or integrity of affected portion of work.

B. Protect surrounding materials and equipment prior to starting work.

C. Contain and control cooling liquids and slurry produced by the cutting and coring operations.

D. When the cutting or coring will result in the structure or equipment being exposed to provide adequate weather protection.

E. Provide dewatering for excavation work in accordance with Section 02140.

3.03 PERFORMANCE

A. Execute cutting and demolition by methods which will prevent damage to other work and will provide proper surfaces to receive installation of repairs.

B. Execute excavating and backfilling by methods which will prevent settlement or damage to other work. When excavating in close proximity to piping, duct banks or other items subject to damage, use hand excavation.

C. All equipment and workplace safety shall conform to OSHA standards and specifications pertaining to plugs, noise and fume pollution, wiring and maintenance.

D. Where possible, employ original installer or fabricator to perform cutting and patching for:

1. Weather-exposed or moisture-resistant elements.

2. Sight-exposed finished surfaces.

E. Execute fitting and adjustment of products to provide a finished installation to comply with specified products, functions, tolerances and finishes.

F. Restore work which has been cut or removed; install new products to provide completed work in accordance with requirements of Contract Documents.

G. Refinish entire surfaces as necessary to provide an even finish to match adjacent finishes:

1. For continuous surfaces, refinish to nearest intersection.

2. For an assembly, refinish entire unit.

H. Remove rubble and excess patching materials from the premises.

3.04 CORING

A. All coring shall be performed in such a manner as to limit the extent of patching. Locate the rebar before coring to minimize cut throughs.

B. Coring shall be performed with an approved non-impact rotary tool with diamond core drills.

C. Size of holes shall be suitable for pipe, conduit, sleeves, equipment or mechanical seals to be installed.

D. Fit work to minimize space to pipes, sleeves, ducts, conduit and other penetrations through surfaces.

E. Fit to pipes and other penetrations in tanks to be water tight using seals or other methods defined in the specifications.

F. All holes cut through concrete and masonry walls, slabs or arches shall be core drilled unless otherwise approved. All work shall be performed by mechanics skilled in this type of work.

G. If holes are cored through floor slabs they shall be drilled from below where possible. If holes are drilled from above, provide protection and containment below the area being drilled to catch the plug and contain liquid and slurry.

3.05 CUTTING

A. All cutting shall be performed in such a manner as to limit the extent of patching.

B. Fit work to minimize space to pipes, sleeves, ducts, conduit and other penetrations through surfaces.

C. Cutting shall be performed with a concrete saw and diamond saw blades of proper size.

D. Provide for control of slurry generated by sawing operation on both sides of wall and from below if cutting a floor.

E. When cutting a reinforced concrete wall or floor, the cutting shall be done so as not to damage the bond between the concrete and reinforcing steel left in structure. Cut shall be made so that steel neither protrudes nor is recessed from face of the cut.

F. Adequate bracing of area to be cut shall be installed prior to start of cutting. Check area during sawing operations for partial cracking and provide additional bracing as required to prevent a partial release of cut area during sawing operations.

G. Provide equipment of adequate size to remove cut panel.

H. Saw cut concrete and masonry prior to breaking out sections.

I. Install work at such time as to require the minimum amount of cutting and patching.

J. All cutting of structural members shall be done in a manner directed by the Engineer.

K. Cut opening only large enough to allow easy installation of the equipment, ducting, piping or conduit.

L. When existing conduits or pipe sleeves are cut off at the floor line or wall line, they shall be filled with grout or suitable patching material.

3.06 PROTECTION

A. Provide devices and methods to protect other portions of project from damage.

B. Provide protection from elements for that portion of the project which may be exposed by cutting and patching work.

C. Maintain excavations free from water.

3.07 PATCHING

A. Rough patching shall be such as to bring the cut or cored area flush with existing construction unless otherwise shown.

B. Finish patching shall match existing surfaces as approved.

C. Patching shall be of the same kind and quality of material as was removed.

D. The completed patching work shall restore the surface to its original appearance or better.

E. Patching of waterproofed surfaces shall render the area of the patching completely waterproofed to include the joint between the existing material and the patch.

F. Equipment damaged during cutting and patching shall be replaced or repaired by the equipment manufacturer, at the Engineer's sole discretion and at the expense of the Contractor doing the work.

G. Repaint any damage to factory applied paint finishes using touch-up paint furnished by the equipment manufacturer. The entire damaged panel or section shall be repainted in accordance with the field painting requirements specified in Section 09902 at the expense of the Contractor doing the work.

H. Slurry or tailings resulting from coring or cutting operations shall be contained and vacuumed or otherwise removed from the area following drilling or cut.

I. Equipment shall be protected against mechanical and water damage during cutting and patching. Provide protective covers or use other means such as temporary relocation to protect equipment that is at risk of damage from the cutting and patching

J. Provide protection for existing equipment, utilities and critical areas against water or other damage caused by drilling operation.

END OF SECTION

© 2019 CDM Smith
All Rights Reserved

SECTION 01046
CONTROL OF WORK

PART 1 GENERAL

1.01 SCOPE OF WORK

A. The Contractor shall meet all general requirements of JEA Water and Sewer Standards and the following general construction requirements outlined in this Section hereinafter.

1.02 PLANT (PUMP STATION)

A. The Contractor shall furnish equipment which will be efficient, appropriate and large enough to secure a satisfactory quality of work and a rate of progress which will ensure the completion of the work within the Contract Time. If at any time such equipment appears to be inefficient, inappropriate or insufficient for securing the quality of work required or for producing the rate of progress aforesaid, Engineer may order the Contractor to increase the efficiency, change the character or increase the equipment and the Contractor shall conform to such order. Failure of the Engineer to give such order shall in no way relieve the Contractor of his obligations to secure the quality of the work and rate of progress required.

1.03 PRIVATE LAND

A. The Contractor shall not enter or occupy private land outside of easements, except by permission of the land Owner.

1.04 PIPE LOCATIONS

A. Contractor shall locate all pipelines substantially as indicated on the Drawings for its work and investigate ahead of all pipeline routes to tie-in points prior to installation of pipelines to ensure the identification of unknown or unmarked conflicts, and to avoid unnecessary pipeline elevation changes. The Engineer reserves the right to make such modifications in locations as may be found desirable to avoid interference with existing structures or for other reasons. Where fittings are noted on the Drawings, such notation is for the Contractor's convenience and does not relieve it from laying and jointing different or additional items where required.

1.05 OPEN EXCAVATIONS

A. Adequately safeguard all open excavations by providing temporary barricades, caution signs, lights and other means to prevent accidents to persons and damage to property. Provide suitable and safe bridges and other crossings for accommodating travel by pedestrians and workmen. Remove bridges provided for access during construction when no longer required. The length or size of excavation will be controlled by the particular surrounding conditions, but shall always be confined to the limits prescribed by the Engineer. If the excavation becomes a hazard, or if it excessively restricts traffic at any point, the Engineer may require special construction procedures such as limiting the length of the open trench, prohibiting stacking excavated material in the street and requiring that the trench shall not remain open overnight.

B. Take precautions to prevent injury to the public due to open trenches. Provide adequate light at all trenches, excavated material, equipment, or other obstacles which could be dangerous to the public at night.

1.06 TEST PITS

A. Excavate test pits, at the direction of the Engineer, to locate underground pipelines or structures in advance of the construction. Backfill test pits immediately after their purpose has been satisfied and restore and maintain the surface in a manner satisfactory to the Engineer.

1.07 MAINTENANCE OF TRAFFIC

A. Unless permission to close a street is received in writing from the proper authority, place all excavated material so that vehicular and pedestrian traffic may be maintained at all times. If the construction operations cause traffic hazards, repair the road surface, provide temporary ways, erect wheel guards or fences, or take other measures for safety satisfactory to the Engineer.

B. Detours around construction will be subject to the approval of the Owner and the Engineer. Where detours are permitted, provide all necessary barricades and signs as required to divert the flow of traffic. Expedite construction operations while traffic is detoured. Periods when traffic is being detoured will be strictly controlled by the Owner.

C. Take precautions to prevent injury to the public due to open trenches. Night watchmen may be required where special hazards exist, or police protection provided for traffic while work is in progress. Be fully responsible for damage or injuries whether or not police protection has been provided.

1.08 CARE AND PROTECTION OF PROPERTY

A. Be responsible for the preservation of all public and private property and use every precaution necessary to prevent damage thereto. If any direct or indirect damage is done to public or private property by or on account of any act, omission, neglect, or misconduct in the execution of the work on the part of the Contractor, restore such property to a condition similar or equal to that existing before the damage was done, or make good the damage in other manner acceptable to the Engineer.

1.09 PROTECTION AND RELOCATION OF EXISTING STRUCTURES AND UTILITIES

A. Assume full responsibility for the protection of all buildings, structures, and utilities, public or private, including poles, signs, services to buildings, utilities in the street, gas pipes, water pipes, hydrants, sewers, drains and electric and telephone cables, whether or not they are shown on the Drawings. Carefully support and protect all such structures and utilities from damage or injury of any kind. Immediately repair any damage resulting from the construction operations.

B. Assistance will be given the Contractor in determining the location of existing services. The Contractor, however, shall bear full responsibility for obtaining all locations of underground structures and utilities (including existing water services, drain lines and sewers). Maintain services to buildings and pay costs or charges resulting from damage thereto.

C. Notify all utility companies in writing at least 72 hours (excluding Saturdays, Sundays and Legal holidays) before excavating in any public way. Also notify Florida Sunshine811, telephone 1-800-432-4770 at least 72 hours prior to start of work.

D. If, in the opinion of the Owner or Engineer, permanent relocation of a utility is required, the Engineer or Owner may direct the Contractor, in writing, to perform the work. Work so ordered

will be paid for at the Contract unit prices, if applicable, or as extra work under Article 11 of the Supplementary Conditions. If relocation of a privately owned utility is required, the Owner will notify the Utility to perform the work as expeditiously as possible.

E. Coordinate the removal and replacement of traffic loops and signals, if required for the performance of the work, at no additional cost to the Owner.

1.10 WATER FOR CONSTRUCTION PURPOSES

A. Contractor shall obtain a temporary construction water meter from Owner and pay for all water used.

B. The express approval of the Owner shall be obtained before water is used. Waste of water shall be sufficient cause for withdrawing the privilege of unrestricted use. Hydrants shall only be operated under the supervision of the Owner's personnel.

1.11 MAINTENANCE OF FLOW

A. Contractor shall provide for the continuous maintenance of flow of all existing sewers and forcemains, drains, and water courses for interrupted service during the progress of the work, and immediately cart away and remove all offensive matter. Contractor shall discuss the entire procedure of maintaining existing flow with the Engineer well in advance of the interruption of any flow.

1.12 PROTECTION OF CONSTRUCTION AND EQUIPMENT

A. All newly constructed work shall be carefully protected from damage or injury in any way. No wheeling or walking or placing of heavy loads on it shall be allowed and all portions damaged shall be reconstructed by the Contractor at its own expense.

B. All structures shall be protected in a suitable manner. Proposed methods of protection shall be submitted to the Engineer. Should any of the floors or other parts of any structures become heaved, cracked or otherwise damaged, all such damaged portions of the work shall be completely repaired and made good by the Contractor at his own expense and to the satisfaction of the Owner. If, in the final inspection of the work, any defects, faults or omissions are found, the Contractor shall cause the same to be repaired or removed and replaced by proper materials and workmanship without extra compensation for the materials and labor required. Further, the Contractor shall be fully responsible for the satisfactory maintenance and repair of the construction and other work undertaken herein, for at least the guarantee period described in the Contract.

1.13 COOPERATION WITHIN THIS CONTRACT

A. All firms or persons authorized to perform any work under this Contract shall cooperate with Contractor and Subcontractors or trades and assist in incorporating the work of other trades where necessary or required.

B. Cutting and patching, drilling and fitting shall be carried out where required by the trade or Subcontractor having jurisdiction, unless otherwise indicated herein or directed by the Engineer.

1.14 CLEANUP AND DISPOSAL OF EXCESS MATERIAL

A. During the course of the work, keep the site of operations as clean and neat as possible. Dispose of all residue resulting from the construction work and, at the conclusion of the work, remove and haul away any surplus excavation, broken pavement, lumber, equipment, temporary structures and any other refuse remaining from the construction operations and leave the entire site of the work in a neat and orderly condition.

B. In order to prevent environmental pollution arising from the construction activities related to the performance of this Contract, comply with all applicable Federal, State and local laws and regulations concerning waste material disposal, as well as the specific requirements stated in this Section and in other related sections.

C. Disposal of excess excavated material in wetlands, stream corridors and plains is strictly prohibited even if the permission of the property Owner is obtained. Any violation of this restriction by the Contractor or any person employed by him will be brought to the immediate attention of the responsible regulatory agencies, with a request that appropriate action be taken against the offending parties. The Contractor will be required to remove the fill and restore the area impacted at no increase in the Contract Price.

1.15 GRADES, SURVEY LINES, AND PROTECTION OF MONUMENTS

A. All work shall be constructed in accordance with the lines and grades shown on the drawings. The full responsibility for keeping alignment and grade shall rest upon the Contractor.

B. Bench marks and base line controlling points shall be established prior to beginning work. Reference marks for lines and grades as the work progresses will be located to cause as little inconvenience to the prosecution of the work as possible. The Contractor shall so place excavation and other materials as to cause no inconvenience in the use of the reference marks provided. Contractor shall remove any obstructions placed contrary to this provision.

C. The Contractor shall furnish and maintain, at his own expense, stakes and other such materials and give such assistance, including qualified helpers, for setting reference marks to the satisfaction of the Engineer. The Contractor shall check reference marks by such means, as he may deem necessary. The Contractor shall, at his own expense, establish all working or construction lines and grades as required from the reference marks and shall be solely responsible for the accuracy thereof.

D. Property corners and survey monuments shall be preserved using care not to disturb or destroy them. If a property corner or survey monument is disturbed or destroyed during construction, whether by accident, careless work, or required to be disturbed or destroyed by construction work, said property corner or survey monument shall be restored by a land surveyor registered in the state of Florida. All costs for this work shall be paid for by the Contractor.

PART 2 PRODUCTS (NOT USED)

PART 3 EXECUTION (NOT USED)

END OF SECTION

© 2019 CDM Smith
All Rights Reserved

SECTION 01050
PROJECT CONTROLS (SURVEYING)

PART 1 GENERAL

1.01 SCOPE OF WORK

A. Provide and pay for field engineering services required for project; including but not limited to:

1. Survey work required for project controls and layout.

2. Certified as-built surveys specified herein.

B. Retain the services of a registered land surveyor licensed in the state of the project location to:

1. Identify existing control points and property line corners indicated on the Drawings.

2. Verify and record all existing structure locations in the vicinity of, or adjacent to, the proposed Work; and, the locations of all pro-posed structures and facilities.

3. Maintain an accurate record of locations of all new buried piping and existing buried piping and other buried existing facilities (piping, conduits, and structures) encountered and/or relocated during construction of the new Work.

1.02 RELATED WORK

A. Contract Closeout Section 01700.

B. Record Drawings Section 01720.

1.03 SUBMITTALS

A. Submit, to the Engineer, the name, address and state registration and license number of proposed registered land surveyor.

B. On request of the Engineer, submit documentation to verify accuracy of field engineering work.

C. At the end of the project, and prior to final payment, submit certified drawing(s) (with the Surveyor's title block) of the items listed below. All surveys shall be tied to the applicable Grid System and shall indicate all pre-existing and new project benchmarks. Vertical Control shall conform to the project elevation datum designated on the plans.

1. Certified site survey at 1-in = 50-ft scale or larger, but not greater than 1-in = 20-ft scale, on 24-in by 36-in sheet(s), indicating the building corners, sidewalks, paved areas and location of all above ground structures within the project site or limits of construction.

2. Certified survey, drawn to the same scale as the Engineer's yard piping drawings, showing the locations, lines and grades in plan and profile views of all below-grade lines (piping and concrete-encased electrical ducts) exterior to buildings and other buried facilities (e.g., valves, tanks, etc). This requirement includes all utilities installed as a part of the scope of this project, as well as existing lines encountered during the installation of the new Work.

3. Topographical surveys shall be scaled 1-in = 50-ft scale or larger, but not greater than 1-in = 20-ft scale, on 24-in by 36-in sheet(s), with 2-foot contour intervals for 1 inch:50 feet scale drawings and 1-foot contour intervals for 1 inch:20 feet scale drawings.

1.04 QUALIFICATIONS OF SURVEYOR

A. Registered land surveyor, licensed in the state of Florida.

1.05 SURVEY REFERENCE POINTS

A. Existing basic horizontal and vertical control points for the project are those designated on Drawings.

B. Locate and protect control points prior to starting site work and preserve all permanent reference points during construction.

1. Make no changes or relocations without prior written notice to and approval by the Engineer.

2. Report to the Engineer when any reference point is lost or destroyed, or requires relocation because of necessary changes in grades or locations.

3. Require the surveyor to correctly replace project control points which may be lost or destroyed. Establish replacements based on original survey control.

1.06 PROJECT SURVEY REQUIREMENTS

A. Establish a minimum of two permanent bench marks on site, referenced to data established by survey control points.

1. Record locations, with horizontal and vertical data, on the as-built Survey.

2. Permanent benchmarks shall be installed and spaced for convenient reference and use at locations along the pipeline route and/or on the plant site.

3. Benchmarks shall be installed to National Geodetic Survey standards and shall include horizontal and vertical data, as well as the installation date.

B. Establish lines and levels; locate and lay out:

1. Site improvements.
   a. Stakes for grading, fill and topsoil placement.
   b. Utility slopes and invert elevations.
   c. Sidewalks, pavement, fencing, storm drainage facilities, and other finish surface work.

2. Batter boards for structures.

3. Building foundation, column locations and floor levels.

4. Controlling lines and levels required for mechanical and electrical trades.

C. If lines, levels or layouts are lost or destroyed, or if required by the Owner or Engineer, verify layouts by same methods.

D. Establish all lines and grades prior to construction of line work for all force mains, transmission mains, storm drainage piping, gravity sewers and other new utility lines at 100-ft increments, at defined breaks in grade, and at manholes.

PART 2 PRODUCTS (NOT USED)

PART 3 EXECUTION

3.01 RECORDS

A. Maintain a complete, accurate log of all control and survey work as it progresses.

B. Update the project as-built survey on a monthly basis, based on the work performed during the month. Submit one copy of up to date as-built documentation with Contractor's monthly applications for payment.

C. Maintain an accurate record of new and existing piping, conduit and structure changes, revisions, relocations, and modifications.

D. At the end of the project, submit the following:

1. Four signed and sealed prints of all required as-built survey information

2. Copy of all AutoCAD files of documents specified in Article 1.03.C, above on a CD or DVD.

END OF SECTION

THIS PAGE INTENTIONALLY LEFT BLANK

© 2019 CDM Smith
All Rights Reserved

SECTION 01110
ENVIRONMENTAL PROTECTION PROCEDURES

PART 1 GENERAL

1.01 SCOPE OF WORK

A. Furnish all labor, materials and equipment and perform all work required for the prevention of environmental pollution in conformance with applicable laws and regulations, during and as the result of construction operations under this Contract. For the purpose of this Section, environmental pollution is defined as the presence of chemical, physical, or biological elements or agents which adversely affect human health or welfare; unfavorably alter ecological balances of importance to human life; affect other species of importance to man; or degrade the utility of the environment for aesthetic and/or recreational purposes.

B. The control of environmental pollution requires consideration of air, water and land, and involves management of noise and solid waste, as well as other pollutants.

C. Schedule and conduct all work in a manner that will minimize the erosion of soils in the area of the work. Provide erosion control measures such as diversion channels, sedimentation or filtration systems, berms, staked hay bales, seeding, mulching or other special surface treatments as are required to prevent silting and muddying of streams, rivers, impoundments, lakes, etc. All erosion control measures shall be in place in an area prior to construction activity in that area. Specific requirements for erosion and sedimentation controls are specified in Section 02276.

D. This Section is intended to provide that construction is achieved with a minimum of disturbance to the existing ecological balance between a water resource and its surroundings. These are general guidelines. It is the Contractor's responsibility to determine the specific construction techniques to meet these guidelines.

E. All phases of sedimentation and erosion control shall comply with and be subject to the approval of the Florida Department of Environmental Protection. Prepare sedimentation and erosion control drawings meeting the requirements for approval by that agency. Upon approval, furnish two copies of the approved Drawing to the Engineer.

1.02 APPLICABLE REGULATIONS

A. Comply with all applicable Federal, State and local laws and regulations concerning environmental pollution control and abatement.

1.03 NOTIFICATIONS

A. The Engineer will notify the Contractor in writing of any non-compliance with the foregoing provisions or of any environmentally objectionable acts and corrective action to be taken. State or local agencies responsible for verification of certain aspects of the environmental protection requirements shall notify the Contractor in writing, through the Engineer, of any non-compliance with State or local requirements. After receipt of such notice from the Engineer or from the regulatory agency through the Engineer, immediately take corrective action. Such notice, when delivered to the Contractor or his authorized representative at the site of the work, shall be deemed sufficient for the purpose. If the Contractor fails or refuses to comply promptly,

the Owner may issue an order stopping all or part of the work until satisfactory corrective action has been taken. No part of the time lost due to any such stop orders shall be made the subject of a claim for extension of time or for excess costs or damages by the Contractor unless it is later determined that the Contractor was in compliance.

1.04 IMPLEMENTATION

A. Prior to commencement of the work, meet with the Engineer to develop mutual understandings relative to compliance with these provisions and administration of the environmental pollution control program.

B. Remove temporary environmental control features, when approved by the Engineer and incorporate permanent control features into the project at the earliest practicable time.

PART 2 PRODUCTS (NOT USED)

PART 3 EXECUTION

3.01 EROSION CONTROL

A. Provide positive means of erosion control such as shallow ditches around construction to carry off surface water. Erosion control measures, such as siltation basins, check dams, mulching, jute netting and other equivalent techniques, shall be used as appropriate. Flow of surface water into excavated areas shall be prevented. Ditches around construction area shall also be used to carry away water resulting from dewatering of excavated areas. At the completion of the work, ditches shall be backfilled and the ground surface restored to original condition.

3.02 PROTECTION OF STREAMS AND SURFACE WATERS

A. Take all precautions to prevent, or reduce to a minimum, any damage to any stream or surface water from pollution by debris, sediment or other material, or from the manipulation of equipment and/or materials in or near such streams. Water that has been used for washing or processing, that contains oils or sediments that will reduce the quality of the water in the stream, shall not be directly returned to the stream. Divert such waters through a settling basin or filter before being directed into streams or surface waters.

B. Do not discharge water from dewatering operations directly into any live or intermittent stream, channel, wetlands, surface water or any storm sewer. Water from dewatering operations shall be treated by filtration, settling basins, or other approved method to reduce the amount of sediment contained in the water to allowable levels.

C. Take all preventative measures to avoid spillage of petroleum products and other pollutants. In the event of any spillage, prompt remedial action shall be taken in accordance with a contingency action plan approved by the Florida Department of Environmental Protection. Submit two copies of approved contingency plans to the Engineer.

D. Water being flushed from structures or pipelines after disinfection, with a Cl^2 residue of 2 mg/l or greater shall be treated with a dechlorination solution, in a method approved by the Engineer, prior to discharge.

3.03 PROTECTION OF LAND RESOURCES

A. Restore land resources within the project boundaries and outside the limits of permanent work to a condition, after completion of construction that will appear to be natural and not detract from the appearance of the project. Confine all construction activities to areas shown on the Drawings.

B. Outside of areas requiring earthwork for the construction of the new facilities, do not deface, injure, or destroy trees or shrubs, nor remove or cut them without prior approval. No ropes, cables, or guys shall be fastened to or attached to any existing nearby trees for anchorage unless specifically authorized by the Engineer. Where such special emergency use is permitted, first wrap the trunk with a sufficient thickness of burlap or rags over which softwood cleats shall be tied before any rope, cable, or wire is placed. The Contractor shall in any event be responsible for any damage resulting from such use.

C. Before beginning operations near them, protect trees that may possibly be defaced, bruised, injured, or otherwise damaged by the construction equipment, dumping or other operations, by placing boards, planks, or poles around them. Monuments and markers shall be protected similarly.

D. Any trees or other landscape features scarred or damaged by the Contractor's equipment or operations shall be restored as nearly as possible to their original condition. The Engineer will decide the method of restoration to be used and whether damaged trees shall be treated and healed or removed and disposed of.

1. All scars made on trees by equipment, construction operations, or by the removal of limbs larger than 1-in in diameter shall be coated as soon as possible with an approved tree wound dressing. All trimming or pruning shall be performed in an approved manner by experienced workmen with saws or pruning shears. Tree trimming with axes will not be permitted.

2. Climbing ropes shall be used where necessary for safety. Trees that are to remain, either within or outside established clearing limits, that are subsequently damaged by the Contractor and are beyond saving in the opinion of the Engineer, shall be immediately removed and replaced.

E. The locations of the Contractor's storage and other construction buildings required temporarily in the performance of the work, shall be cleared portions of the job site or areas to be cleared as shown on the Drawings and approved by the Engineer and shall not be within wetlands or floodplains. The preservation of the landscape shall be an imperative consideration in the selection of all sites and in the construction of buildings. Drawings showing storage facilities shall be submitted for approval of the Engineer.

F. If the Contractor proposes to construct temporary roads or embankments and excavations for plant and/or work areas, he shall submit the following for approval at least ten days prior to scheduled start of such temporary work.

1. A layout of all temporary roads, excavations, embankments and drainage to be constructed within the work area.

2. Details of temporary road construction.

3. Drawings and cross sections of proposed embankments and their foundations, including a description of proposed materials.

4. A landscaping drawing showing the proposed restoration of the area. Indicate the proposed removal of any trees and shrubs outside the limits of existing clearing area. Indicate locations of guard posts or barriers required to control vehicular traffic and protect trees and shrubs to be maintained undamaged. The Drawing shall provide for the obliteration of construction scars as such and shall provide for a natural appearing final condition of the area. Modification of the Contractor's approved drawings shall be made only with the written approval of the Engineer. No unauthorized road construction, excavation or embankment construction including disposal areas will be permitted.

G. Remove all signs of temporary construction facilities such as haul roads, work areas, structures, foundations of temporary structures, stockpiles of excess of waste materials, or any other vestiges of construction as directed by the Engineer. It is anticipated that excavation, filling and plowing of roadways will be required to restore the area to near natural conditions which will permit the growth of vegetation thereon. The disturbed areas shall be prepared and seeded as described in Section 02932, or as approved by the Engineer.

H. All debris and excess material will be disposed of outside wetland or floodplain areas in an environmentally sound manner.

3.04 PROTECTION OF AIR QUALITY

A. Burning - The use of burning at the project site for the disposal of refuse and debris will not be permitted.

B. Dust Control - Maintain all excavations, embankment, stockpiles, access roads, plant sites, waste areas, borrow areas and all other work areas within or without the project boundaries free from dust which could cause the standards for air pollution to be exceeded and which would cause a hazard or nuisance to others.

C. An approved method of stabilization consisting of sprinkling or other similar methods will be permitted to control dust. The use of petroleum products is prohibited. The use of chlorides may be permitted with approval from the Engineer.

D. Sprinkling, to be approved, must be repeated at such intervals as to keep all parts of the disturbed area at least damp at all times, and the Contractor shall have sufficient competent equipment on the job to accomplish this. Dust control shall be performed as the work proceeds and whenever a dust nuisance or hazard occurs, as determined by the Engineer.

3.05 NOISE CONTROL

A. Make every effort to minimize noises caused by the construction operations. Equipment shall be equipped with silencers or mufflers designed to operate with the least possible noise in compliance with Federal and State regulations.

3.06 MAINTENANCE OF POLLUTION CONTROL FACILITIES DURING CONSTRUCTION

A. Maintain all facilities constructed for pollution control as long as the operations creating the particular pollutant are being carried out or until the material concerned has become stabilized

to the extent that pollution is no longer being created and approval for removal is provided by the Engineer.

END OF SECTION

THIS PAGE INTENTIONALLY LEFT BLANK

© 2019 CDM Smith
All Rights Reserved

SECTION 01170
SPECIAL PROVISIONS

PART 1 GENERAL

1.01 INSTALLATION OF EQUIPMENT

A. Special care shall be taken to ensure proper alignment of all equipment with particular reference to the pumps and electric drives. The units shall be carefully aligned on their foundations by qualified millwrights after their sole plates have been shimmed to true alignment at the anchor bolts. The anchor bolts shall be set in place and the nuts tightened against the shims. After the foundation alignments have been approved by the Engineer, the bedplates or wing feet of the equipment shall be securely bolted in place. The alignment of equipment shall be further checked after securing to the foundations, and after conformation of all alignments, the sole plates shall be finally grouted in place. The Contractor shall be responsible for the exact alignment of equipment with associated piping and under no circumstances, will "pipe springing" be allowed.

B. All wedges, shims, filling pieces, keys, packing, grout, or other materials necessary to properly align, level and secure apparatus in place shall be furnished by the Contractor. All parts intended to be plumb or level must be proven exactly so. Perform all grinding necessary to bring parts to proper bearing after erection.

1.02 SLEEVES AND OPENINGS

A. Provide all openings, channels, chases, etc, in new construction and furnish and install anchor bolts and other items to be embedded in concrete, as required to complete the work under this Contract. Perform all cutting, coring and rough and finish patching required in existing construction for the work of all trades as provided in Section 01045.

B. Provide all openings, channels, chases, etc. and install anchor bolts and other items to be embedded in concrete, as required to complete the work under this Contract, together with those required by subcontractors and perform all cutting and patching, excepting cutting and patching of materials of a specified trade and as stated otherwise in the following paragraph.

C. Subcontractors shall furnish all sleeves, inserts, hangers, anchor bolts, etc, required for the execution of their work. It shall be their responsibility before the work of the Contractor is begun to furnish him with the above items and with templates, drawings or written information covering chases, openings, etc, which they require and to follow up the work of the Contractor as it progresses, making sure that their drawings and written instructions are carried out. Failing to do this, they shall be responsible for the cost of any corrective measures which may be required to provide necessary openings, etc. If the Contractor fails to carry out the directions given him, covering details and locations of openings, etc., he shall be responsible for any cutting and refinishing required to make the necessary corrections. In no case shall beams, lintels, or other structural members be cut without the approval of the Engineer.

1.03 SUBMITTALS

A. Submit to the Engineer in accordance with Section 01300, a valve schedule as specified in Paragraph 1.10.

1.04 GREASE, OIL AND FUEL

A. All grease, oil and fuel required for testing of equipment shall be furnished with the respective equipment. The Owner shall be furnished with a year's supply of required lubricants including grease and oil of the type recommended by the manufacturer with each item of equipment supplied under Divisions 15.

1.05 TOOLS

A. Any special tools (including grease guns or other lubricating devices) which may be necessary for the adjustment, operation and maintenance of any equipment shall be furnished with the respective equipment.

B. Tools shall be furnished in heavy steel tool boxes complete with lock and duplicate keys.

1.06 POWER SUPPLY

A. Unless otherwise specified, all motors 1/2 Hp and larger shall be designed for a power supply of 460 Volts, 3 Phase, 60 Hz, and all motors 1/3 Hp and smaller shall be designed for a power supply of 120 Volts, single phase, 60 Hz.

1.07 POWER FACTOR CORRECTION CAPACITORS

A. All single and multi-speed three phase induction motors 5 Hp and larger shall be furnished with factory provided power factor correction capacitors.

B. Capacitors shall be sized by the manufacturers such that over voltage due to self-excitation will be prevented and transient torques limited to normal values. Full load power factor shall be corrected to not less than 0.95 where such correction will not violate the provisions of NEC Article 460.

C. Capacitor enclosures shall be compatible with those specified for their respective motors, i.e., dust-tight for indoor installation in non-hazardous areas and weatherproof for outdoor installations.

D. Capacitors shall be dry or oil insulated with integral fuse protection and discharge resistor. The insulating medium shall be non-flammable and meet U.S. Environmental Protection Agency Standards.

E. Capacitors shall be installed under Division 16.

1.08 ARCHITECTURAL COATINGS

A. Maintain coordination among all Sections windows, window walls, louvers, doors and frames, etc requiring coatings. All coatings shall match to the satisfaction of the Engineer with regard to color and texture. Items rejected by the Engineer shall promptly be removed from the job site.

1.09 PIPE MARKING

A. Pipe marking is included in Division 9 under Painting, but it shall be the Contractor's responsibility to assist, as required by the Engineer, in identifying pipe contents, direction of

flow and all else required for proper marking of pipe. Subcontractors responsible for piping in Division 15 shall be required by the Contractor to assist when necessary.

1.10 VALVE IDENTIFICATION

A. The Contractor shall prepare a valve schedule for all valves required for the work showing a number, the location, type, function, and normal operating position, for each valve. The schedule shall be submitted, in accordance with Section 01300, to the Engineer for approval not less than 120 days prior to start-up.

B. The Contractor shall furnish tags for all valves required for the work. Valve tags shall be 2-in diameter, 19 gauge, brass or plastic, with brass hooks suitable for attaching the tag to the valve operator. Tags shall be stamped or etched with the valve number and the information on the valve schedule coded in a system provided by the Owner. Submit two samples of the type of tag proposed and the manufacturer's standard color chart and letter styles to the Engineer for approval.

C. The Contractor shall install valve tags on all valves required for the Work.

1.11 NOISE LIMITATIONS

A. All equipment to be furnished under this Contract, unless specified otherwise in the technical specifications, shall be designed to ensure that the sound pressure level does not exceed 85 decibels over a frequency range of 37.8 to 9600 cycles per second at a distance of 3-ft from any portion of the equipment, under any load condition, when tested using standard equipment and methods. Noise levels shall include the noise from the motor. Mufflers or external baffles shall not be acceptable for the purpose of reducing noise. Data on noise levels shall be included with the shop drawing submittal.

1.12 SPARE PARTS

A. Where spare parts are specified in the technical sections, furnish all spare parts recommended by the manufacturer or system supplier for one year of service. In addition, furnish all spare parts itemized in each Section.

B. Collect and store all spare parts in an area to be designated by the Engineer. Furnish the Engineer with an inventory listing all spare parts, the equipment they are associated with, the name and address of the supplier and the delivered cost of each item. Copies of actual invoices for each item shall be furnished with the inventory to substantiate the delivery cost.

C. Spare parts shall be packed in cartons, properly labeled with indelible markings with complete descriptive information including manufacturer, part number, part name and equipment for which the part is to be used and shall be properly treated for one year of storage.

1.13 RIGHT TO KNOW LAW

A. The Contractor shall submit to the Florida Department of Environmental Protection the Material Safety Data Sheets for all substances or mixture of substances used on the Project by him or his subcontractors prior to commencing any work in accordance with the requirements of MGL Chapter 111F, Section 16.

1.14 HURRICANE PREPAREDNESS PLAN

A. Within 30 days of the date of Notice to Proceed, submit a Hurricane Preparedness Plan to the Engineer and the Owner for approval. The Plan shall describe in detail the necessary measures which the Contractor will perform, at no additional costs to the Owner, in case of a hurricane warning. Revise Plan as required by the Engineer and Owner.

1.15 WEATHER PROTECTION

A. In the event of inclement weather, the Contractor and subcontractors shall protect the Work and materials from damage or injury from the weather. If, in the opinion of the Engineer, any portion of the Work or materials has been damaged by reason of failure on the part of the Contractor or subcontractors to so protect the Work, such Work and materials shall be removed and replaced with new materials and Work to the satisfaction of the Engineer.

END OF SECTION

© 2019 CDM Smith
All Rights Reserved

SECTION 01180
PIPE PENETRATIONS

PART 1 GENERAL

1.01 SCOPE OF WORK

A. Furnish all labor, materials, equipment and incidentals required and install pipe penetration assemblies at all floor and wall penetrations as shown on the Drawings. This Section covers materials for the various pipe penetration configurations. Generally, penetration details are called out on the Drawings and referenced on the detail sheets. Where penetrations are required and not called out, it shall be assumed the most conservative penetration detail shown on the detail sheets shall be utilized as appropriate for the piping type, the wall or floor construction and the rating of the wall or floor penetrated.

1.02 SUBMITTALS

A. Submit manufacturers' literature, installation instructions, and where applicable, fire rating and certified test results of the various components on all items to be furnished in accordance with Section 01300.

PART 2 PRODUCTS

2.01 PIPE SLEEVES

A. Unless otherwise shown all pipe sleeves shall be Schedule 40 galvanized steel pipe conforming to ASTM A53. Where indicated, provide a 2-in minimum circumferential water stop welded to exterior of sleeve at its midpoint. Ends of sleeves shall be cut and ground smooth and shall be flush with the wall or ceiling and extend 2-in above finished floors. Sleeves to be sealed with mechanical seals shall be sized in accordance with the seal manufacturer's recommendations. Sleeves to be sealed by caulking and sleeves for insulated piping shall be sized as required.

B. Where shown on Drawings for new concrete walls only and for up to 20-inch pipe diameter, install molded non-metallic high density polyethylene sleeves (HDPE) with integral hollow, molded water-stop ring four inches larger than the outside diameter of the sleeve itself. Sleeve shall have end caps for forming and reinforcing ribs, and shall be domestically manufactured. Sleeves shall be Century-Line as manufactured by Pipeline Seal & Insulator, Inc., Houston, TX, or equal.

C. Where shown on Drawings for new concrete walls only and for pipe diameters 20 to 60 inches, install molded HDPE modular interlocking discs to make the width of the wall. Discs shall be corrugated to prevent water migration between sleeve and concrete. Discs shall be domestically manufactured, Cell-Cast as manufactured by Pipeline Seal & Insulator, Inc., Houston, TX, or equal.

D. External wall penetrations 36-in diameter and less may be made by means of a ductile iron sleeve capable of being bolted directly to the formwork. Seal of the annular space between the carrier pipe and the sleeve shall be made by means of a confined rubber gasket and be capable of withstanding 350 psi. Sleeve shall have an integrally cast waterstop of 1/2-in minimum thickness, 2-1/2-in minimum height. Sleeves shall be by Omni-Sleeve, Malden, MA or equal.

2.02 WALL CASTINGS

A. Unless otherwise shown, wall castings shall be ductile iron conforming to ANSI/AWWA A21.51/C151, thickness Class 53, diameter as required. Flanges and/or mechanical joint bells shall be drilled and tapped for studs where flush with the wall. Castings shall be provided with a 2-in minimum circumferential flange/waterstop integrally cast with or welded to the casting, located as follows: for castings set flush with walls located at the center of the overall length of the casting; for castings which extend through wall located within the middle third of the wall.

2.03 SEALING MATERIALS

A. Mechanical seals shall consist of rubber links shaped to continuously fill the annular space between the pipe and the wall opening or sleeve. Link pressure plates shall be molded of glass reinforced nylon. Hardware shall be mild steel with a 60,000 psi minimum tensile strength and 2-part Zinc Dichromate coating per ASTM B-633 and Organic Coating, tested in accordance with ASTM B-117 to pass a 1,500-hour salt spray test. Type 316 Stainless Steel hardware shall be used in chemical areas, for submerged service and for penetrations in tanks containing sludge or wastewater. Links shall be colored throughout elastomer for positive material identification. Each link shall have permanent identification of the size and manufacturer's name molded into the pressure plate and sealing element. Completed sealing system shall be duty pressure rated for 20 psig differential pressure. Link material shall be EPDM for all services except fire rated assemblies, fire rated seals shall use silicone link material. Mechanical seals shall be PSI-Thunderline/ Link-Seal as manufactured by Pipeline Seal & Insulator, Inc., Houston, TX, or pre-approved equal.

B. Sealant shall be a two part foamed silicone elastomer by Dow Corning Co., Product No. 3-6548 silicone R.T.V.; 3M brand fire barrier products caulk C.P. 25 and 3M brand moldable putty MP+; or Flame-Safe fire stop systems FS-900 by Rectorseal. Sealant bead configuration, depth and width shall be in accordance with manufacturer's recommendations.

2.04 MISCELLANEOUS MATERIALS

A. Bonding compound shall be Sikadur Hi-Mod epoxy by Sika Corp.; Euco 452 by Euclid Chemical Corp.; Master Builders Company or equal.

B. Non-shrink grout shall be Masterflow 713 by Master Builders Co.; Euco NS by Euclid Chemical Co.; Five Star Grout by U.S. Grout Corp. or equal.

PART 3 EXECUTION

3.01 INSTALLATION

A. Assemble and install components of pipe penetration assemblies as detailed on the Drawings.

END OF SECTION

© 2019 CDM Smith
All Rights Reserved

SECTION 01200
PROJECT MEETINGS

PART 1 GENERAL

1.01 REQUIREMENTS INCLUDED

A. The Engineer shall schedule and administer pre-construction meeting, periodic progress meetings and specially called meetings throughout progress of the work.

1. Prepare agenda for meetings.

2. Make physical arrangements for meetings.

3. Preside at meetings.

4. Record the minutes; include significant proceedings and decisions.

5. Reproduce and distribute copies of minutes within 15 working days after each meeting.
   a. To participants in the meeting.
   b. To parties affected by decisions made at the meeting.

B. Representatives of Contractors, subcontractors and suppliers attending meetings shall be qualified and authorized to act on behalf of the entity each represents.

C. Attend meetings to ascertain that work is expedited consistent with Contract Documents and construction schedules.

1.02 RELATED REQUIREMENTS

A. Instructions to Bidders are included in Section 00100.

B. Construction Schedules are included in Section 01310.

C. Shop Drawings, Working Drawings and Samples are included in Section 01300.

D. Project Record Documents are included in Section 01720.

E. Operating and Maintenance Data is included in Section 01730.

1.03 PRE-CONSTRUCTION MEETING

A. Schedule a preconstruction meeting no later than 15 days after date of Notice to Proceed.

B. Location: A central site, convenient for all parties, designated by the Owner.

C. Attendance

1. Owner's Representative.

2. Engineer and his/her professional consultants.

3. Resident Project Representative.

4. Contractor's Superintendent.

5. Major Subcontractors.

6. Major suppliers.

7. Utilities

8. Others as appropriate.

D. Suggested Agenda

1. Distribution and discussion of:
   a. List of major subcontractors and suppliers.
   b. Projected Construction Schedules.

2. Critical work sequencing.

3. Major equipment deliveries and priorities.

4. Project Coordination.
   a. Designation of responsible personnel.

5. Procedures and processing of:
   a. Field decisions.
   b. Proposal requests.
   c. Submittals.
   d. Change Orders.
   e. Applications for Payment.

6. Adequacy of distribution of Contract Documents.

7. Procedures for maintaining Record Documents.

8. Use of premises:
   a. Office, work and storage areas.
   b. Owner's requirements.

9. Construction facilities, controls and construction aids.

10. Temporary utilities.

11. Housekeeping procedures.

1.04 PROGRESS MEETINGS

A. Schedule regular periodic meetings. The progress meetings will be held every 30 days with the first meeting 30 days after the pre-construction meeting or 30 days after the date of Notice to Proceed.

B. Hold called meetings as required by progress of the work.

C. Location of the meetings: Project field office of Contractor or Engineer.

D. Attendance

1. Engineer and his/her professional consultants as needed.

2. Subcontractors as appropriate to the agenda.

3. Suppliers as appropriate to the agenda.

4. Others as appropriate.

E. Suggested Agenda

1. Review, approval of minutes of previous meeting.

2. Review of work progress since previous meeting.

3. Field observations, problems and conflicts.

4. Problems which impede Construction Schedule.

5. Review of off-site fabrication, delivery schedules.

6. Corrective measures and procedures to regain projected schedule.

7. Revisions to Construction Schedule.

8. Progress, schedule, during succeeding work period.

9. Coordination of schedules.

10. Review submittal schedules; expedite as required.

11. Maintenance of quality standards.

12. Pending changes and substitutions.

13. Review proposed changes for:
    a. Effect on Construction Schedule and on completion date.
    b. Effect on other contracts of the project.

14. Other business.

15. Construction schedule.

16. Critical/long lead items.

F. Attend progress meetings and is to study previous meeting minutes and current agenda items, in order to be prepared to discuss pertinent topics such as deliveries of materials and equipment, progress of the work, etc.

G. Provide a current submittal log at each progress meeting in accordance with Section 01300.

PART 2 PRODUCTS (NOT USED)

PART 3 EXECUTION (NOT USED)

END OF SECTION

© 2019 CDM Smith
All Rights Reserved

SECTION 01300
SUBMITTALS

PART 1 GENERAL

1.01 SCOPE OF WORK

A. This Section includes the requirements for compiling, processing and transmitting submittals required for execution of the project.

B. Submittals are categorized into two types: Action Submittals and Informational Submittals, as follows:

1. Action Submittal: Written and graphic information submitted by the Contractor that requires the Engineer's approval. The following are examples of action submittals:
   a. Shop drawings (including working drawings, valve schedule in accordance with Section 01170, and product data)
   b. Samples
   c. Operation & maintenance manuals
   d. Site Usage Plan (Contractor's staging - including trailer siting and material laydown area)
   e. Schedule of values
   f. Payment application format

2. Informational Submittal: Information submitted by the Contractor that does not require the Engineer's approval. The following are examples of informational submittals:
   a. Shop Drawing Schedule
   b. Construction Schedule
   c. Statements of Qualifications
   d. Health and Safety Plans
   e. Construction Photography and Videography
   f. Work Plans
   g. Maintenance of Traffic Plans
   h. Outage Requests
   i. Proposed Testing Procedures
   j. Test Records and Reports
   k. Vendor Training Outlines/Plans
   l. Test and Start-Up Reports
   m. Certifications
   n. Record Drawings
   o. Record Shop Drawings
   p. Submittals required by laws, regulations and governing agencies
   q. Submittals required by funding agencies
   r. Other requirements found within the technical specifications
   s. Warranties and Bonds
   t. As-Built Surveys
   u. Contract Close-out Documents

1.02 RELATED WORK

A. Additional requirements may be specified in the General Conditions for the Contract.

B. Additional submittal requirements may be specified in the respective technical Specification Sections.

C. Operation and Maintenance manuals are included in Section 01730.

D. Contract closeout submittals are included in Section 01700.

E. Warranties and Bonds are included in Section 01740.

F. Construction Schedules are included in Section 01310.

G. Project Controls (Surveying) Section 01050.

H. Project Record Documents are included in Section 01720.

1.03 CONTRACTOR'S RESPONSIBILITIES

A. All submittals shall be clearly identified as follows:

1. Date of Submission.

2. Project Number.

3. Project Name.

4. Contractor Identification.
   a. Contractor.
   b. Supplier.
   c. Manufacturer.
   d. Manufacturer or supplier representative.

5. Identification of the Product.

6. Reference to Contract Drawing.

7. Reference to specification section number, page and paragraph(s).

8. Reference to applicable standards, such as ASTM or Federal Standards numbers.

9. Indication of Contractor's approval.

10. Contractor's Certification statement.

11. Identification of deviations from the Contract Documents, if any.

12. Reference to previous submittal (for resubmittals).

13. Made in America (when required by the Contract).

B. Submittals shall be clear and legible, and of sufficient size for legibility and clarity of the presented data.

C. Submittal Log. Maintain a log of all submittals. The submittal log shall be kept accurate and up to date. This log should include the following items (as applicable):

1. Description.

2. Submittal Number.

3. Date transmitted to the Engineer.

4. Date returned to Contractor (from Engineer).

5. Status of Submittal (Approved/Not Approved/etc.).

6. Date of Resubmittal to Engineer and Return from Engineer (if applicable and repeat as necessary).

7. Date material released for fabrication.

8. Projected (or actual) delivery date.

D. Numbering System. Utilize the following submittal identification numbering system:

1. The first character shall be a D, S, M or I which represents Shop Drawing (including working drawings and product data), Sample, Manual (Operating & Maintenance) or Informational, respectively.

2. The next five digits shall be the applicable Section Number.

3. The next three digits shall be the sequential number of each separate item or drawing submitted under each Specification Section, in the chronological order submitted, starting at 001.

4. The last character shall be a letter, A to Z, indicating the submission (or resubmission) of the same submittal, i.e., "A" = 1st submission, "B" = 2nd submission, "C" = 3rd submission, etc. A typical submittal number would be as follows:
   a. D-03300-008-B.
   b. D = Shop Drawing03300 = Section for Concrete.
   c. 008 = the eighth different submittal under this Section.
   d. B = the second submission (first resubmission) of that particular shop drawing.

E. Variances

1. Notify the Engineer in writing, at the time of submittal, of any deviations in the submittals from the requirements of the Contract Documents.

2. Notify the Engineer in writing, at the time of re-submittal (resubmission), of all deviations from previous submissions of that particular shop drawing, except those deviations which are the specific result of prior comments from the Engineer.

F. Action Submittals

1. Shop Drawings, Working Drawings, Product Data and Samples.

a. Shop Drawings.
   1) Shop drawings as defined in the General Conditions, and as specified in individual Sections may include, but are not necessarily limited to, custom prepared data such as fabrication and erection/installation (working) drawings, scheduled information, setting diagrams, actual shop work manufacturing instructions, custom templates, valve schedules, wiring diagrams, coordination drawings, equipment inspection and test reports, and performance curves and certifications, as applicable to the work.
   2) Contractor shall verify all field measurements, field construction criteria, materials, dimensions, catalog numbers and similar data, and coordinate each item with other related shop drawings and the Contract requirements.
   3) All details on shop drawings shall clearly show the relation of the various parts to the main members and lines of the structure and where correct fabrication of the work depends upon field measurements, such measurements shall be made and noted on the drawings before being submitted.
   4) All shop drawings submitted by subcontractors and vendors shall be reviewed by the Contractor. Contractor shall confirm, materials, dimensions, catalog numbers, technical data and performance criteria; and shall coordinate with other related shop drawings and the Contract requirements. In addition, Contractor shall confirm existing field conditions and dimensions and assure that the submittal is coordinated and compatible with existing conditions. Submittals directly from subcontractors or vendors will not be accepted by the Engineer.
   5) The Contractor shall be responsible for the accuracy of the subcontractor's or vendor's submittal; and, for their submission in a timely manner to support the requirements of the Contractor's construction schedule. Shop drawings found to be inaccurate or otherwise in error shall be returned to the subcontractor or vendor to correct, before submission to the Engineer. All shop Drawings shall be approved by the Contractor.
   6) Delays to construction due to the untimely submission of submittals will constitute inexcusable delays, for which Contactor shall not be eligible for additional cost nor additional contract time. Inexcusable delays consist of any delay within the Contactor's control.
   7) Submittals for equipment specified under Divisions 11, 14, 15 and 16 shall include a listing of installations where identical or similar equipment manufactured by that manufacturer has been installed and in operation for a period of at least five years.

b. Working Drawings
   1) Detailed installation drawings (sewers, equipment, piping, electrical conduits and controls, HVAC work, and plumbing, etc.) shall be prepared and submitted for review and approval by the Engineer prior to installing such work. Installation drawings shall be to-scale and shall be fully dimensioned.
   2) Piping working drawings shall show the laying dimensions of all pipes, fittings, valves, as well as the equipment to which it is being connected. In addition, all pipe supports shall be shown.
   3) Equipment working drawings shall show all equipment dimensions, anchor bolts, support pads, piping connections and electrical connections. In addition, show clearances required around such equipment for maintenance of the equipment.
   4) Electrical working drawings shall show conduits, junction boxes, disconnects, control devices, lighting fixtures, support details, control panels, lighting and power panels, and Motor Control Centers. Coordinate all locations with the Contract Documents and the Contractor's other working drawings.

c. Product Data
   1) Product data, as specified in individual Specification Sections, include, but are not limited to, the manufacturer's standard prepared data for manufactured products (catalog data), such as the product specifications, installation instructions, availability of colors and patterns, rough-in diagrams and templates, product photographs (or diagrams), wiring diagrams, performance curves, quality control inspection and reports, certifications of compliance (as specified or otherwise required), mill reports, product operating and maintenance instructions, recommended spare parts and product warranties, as applicable.

d. Samples
   1) Furnish, samples required by the Contract Documents for the Engineer's approval. Samples shall be delivered to the Engineer as specified or directed. Unless specified otherwise, provide at least two samples of each required item. Materials or equipment for which samples are required shall not be used in the work unless and until approved by the Engineer.
   2) Samples specified in individual Specification Sections, include, but are not limited to: physical examples of the work (such as sections of manufactured or fabricated work), small cuts or containers of materials, complete units of repetitively-used products, color/texture/pattern swatches and range sets, specimens for coordination of visual effect, graphic symbols, and other specified units of work.
   3) Approval of a sample shall be only for the characteristics or use named in such approval and shall not be construed to change or modify and Contract Requirements.
   4) Approved samples not destroyed in testing shall be sent to the Engineer or stored at the site of the work. Approved samples of the hardware in good condition will be marked for identification and may be used in the work. Materials and equipment incorporated in work shall match the approved samples. Samples which fail testing or are not approved will be returned to the Contractor at his expense, if so requested at time of submission.

e. Professional Engineer (P.E.) Certification Form
   1) If specifically required in any of the technical Specification Sections, submit a Professional Engineer (P.E.) Certification for each item required, using the form appended to this Section.

2. Contractor's Certification
   a. Each shop drawing, working drawings, product data, and sample shall have affixed to it the following Certification Statement:
      1) "Certification Statement: by this submittal, I hereby represent that I have determined and verified all field measurements, field construction criteria, materials, dimensions, catalog numbers and similar data and I have checked and coordinated each item with other applicable approved shop drawings and all Contract requirements."
   b. Shop drawings, working drawings, and product data sheets 11-in x 17-in and smaller shall be bound together in an orderly fashion and bear the above Certification Statement on the cover sheet. The transmittal cover sheet for each identified shop drawing shall fully describe the packaged data and include a listing of all items within the package.

3. The review and approval of shop drawings, working drawings, product data, or samples by the Engineer shall not relieve the Contractor from the responsibility for the fulfillment of

the terms of the Contract. All risks of error and omission are assumed by the Contractor and the Engineer will have no responsibility therefor.

4. Project work, materials, fabrication, and installation shall conform to approved shop drawings (including working drawings and product data) and applicable samples.

5. No portion of the work requiring a shop drawing (including working drawings and product data) or sample shall be started, nor shall any materials be fabricated or installed before approval of such item. Procurement, fabrication, delivery or installation or products or materials that do not conform to approved shop drawings shall be at the Contractor's risk. Furthermore, such products or materials delivered or installed without approved shop drawings, or in non-conformance with the approved shop drawings will not be eligible for progress payment until such time as the product or material is approved or brought into compliance with approved shop drawings. Neither the Owner nor Engineer will be liable for any expense or delay due to corrections or remedies required to accomplish conformity.

6. Operation and Maintenance Data
   a. Operation and maintenance data shall be submitted in assembled manuals as specified. Such manuals shall include detailed instructions for Owner personnel on safe operation procedures, controls, start-up, shut-down, emergency procedures, storage, protection, lubrication, testing, trouble-shooting, adjustments, repair procedures, and other maintenance requirements.

7. Schedule of Values
   1) On projects consisting of lump sums (in whole or in part) submit a proposed schedule of values providing a breakdown of lump sum items in to reasonably small components – generally disaggregated by building, area, and/or discipline. The purpose of the schedule of values is for processing partial payment applications. If requested by the Engineer, provide sufficient substantiation for all or some items as necessary to determine the proposed schedule of values is a reasonable representation of the true cost breakdown of the Work. The schedule of values shall not be unbalanced to achieve early payment or over-payment in excess of the value of work or any other mis-distribution of the costs. If, in the opinion of the Engineer, the schedule of values is unbalanced, Contractor shall reallocate components to achieve a balanced schedule acceptable to Engineer.

8. Payment Application Format
   1) If an application form is included in the Contract Documents, use that form unless otherwise approved by the Engineer and Owner. If an application form is not included in the Contract Documents, Contractor may propose a form for approval.

9. Site Usage
   a. Submit a proposed site staging plan, including but not limited to the location of office trailers, storage trailers and material laydown. Such plan shall be a graphic presentation (drawing) of the proposed locations; and, shall include on-site traffic modifications, and temporary utilities, as may be applicable.

G. Informational Submittals

1. Shop Drawing Schedule
   a. Prepare and submit a schedule indicating when shop drawings are required to be submitted to support the as-planned construction schedule. The submittal schedule shall allow sufficient time for preparation and submittal, review and approval, and fabrication and delivery to support the construction schedule.

2. Construction Schedule
   a. Prepare and submit construction schedules and monthly status reports as specified.

3. Statements of Qualifications
   a. Provide evidence of qualification, certification, or registration, as required in the Contract Documents, to verify qualifications of licensed land surveyor, professional engineer, materials testing laboratory, specialty subcontractor, technical specialist, consultant, specialty installer, and other professionals.
   b. Health and Safety Plans
      1) When specified, prepare and submit a general company Health and Safety Plan (HSP), modified or supplemented to include job-specific considerations.

4. Construction Photography and Videography
   a. Provide periodic construction photographs and videography as specified – including but not limited to preconstruction photographs and/or video, monthly progress photos and/or video and post-construction photographs and/or video.

5. Work Plans
   a. Prepare and submit copies of all work plans needed to demonstrate to the Owner that Contractor has adequately thought-out the means and methods of construction and their interface with existing facilities.

6. Maintenance of Traffic Plans
   a. Prepare maintenance of traffic plans where and when required by the Contract Documents and by local ordinances or regulations. If Contractor is not already knowledgeable about local ordinances and regulations regarding maintenance of traffic requirements, become familiar with such requirements and include all costs for preparation and submittal of traffic management plans and all associated costs for permits and fees to implement the traffic management plan, in the bid amount. In addition, unless a supplemental payment provision is provided in the bid form, include the cost of police attendance, when required.

7. Outage Requests
   a. Provide sufficient notification of any outages required (electrical, flow processes, etc.) as may be required to tie-in new work into existing facilities. Unless specified otherwise elsewhere, a minimum of seven calendar days' notice shall be provided.

8. Proposed Testing Procedures
   a. Prepare and submit testing procedures it proposes to use to perform testing required by the various technical specifications.

9. Test Records and Reports
   a. Provide copies of all test records and reports as specified in the various technical specifications.

10. Vendor Training Outlines/Plans
    a. At least two weeks before scheduled training of Owner's personnel, provide lesson plans for vendor training in accordance with the specification for O&M manuals.

11. Test and Start-up Reports
    a. Manufacture shall perform all pre-start-up installation inspection, calibrations, alignments, and performance testing as specified in the respective Specification Section. Provide copies of all such test and start-up reports.

12. Certifications
    a. Provide various certifications as required by the technical specifications. Such certifications shall be signed by an officer (of the firm) or other individual authorized to sign documents on behalf of that entity.
    b. Certifications may include, but are not limited to:
       1) Welding certifications and welders qualifications
       2) Certifications of Installation, Testing and Training for all equipment
       3) Material Testing reports furnished by an independent testing firm
       4) Certifications from manufacturer(s) for specified factory testing
       5) Certifications required to indicate compliance with any sustainability or LEEDS accreditation requirements indicated in the Contract Documents

13. Record Drawings
    a. No later than Substantial Completion, submit a record of all changes during construction not already incorporated into drawings – in accordance with specification on Project Record Documents.

14. Record Shop Drawings
    a. Before final payment is made, furnish one set of record shop drawings to the Engineer. These record shop drawings shall be in conformance with the approved documents and should show any field conditions which may affect their accuracy.
    b. Submittals required by laws, regulations and governing agencies
       1) Prepare and submit all documentation required by state or local law, regulation or government agency directly to the applicable agency. This includes, but is not limited to, notifications, reports, certifications, certified payroll (for projects subject to wage requirements) and other documentation required to satisfy all requirements. Provide to Engineer one copy of each submittal made in accordance with this paragraph.
    c. Submittals required by funding agencies
       1) Prepare and submit all documentation required by funding agencies. This includes, but is not limited to segregated pay applications and change orders when required to properly allocate funds to different funding sources; and certified payrolls for projects subject to wage requirements. Provide one copy of each submittal made in accordance with this paragraph to the Engineer.

15. Other requirements of the technical Specification Sections
    a. Comply with all other requirements of the technical specifications.

16. Warranties and Bonds
    a. Assemble a booklet or binder of all warranties and bonds as specified in the various technical specifications and in accordance with the specification on Warranties and Bonds; and provide two originals to the Engineer.

17. As-Built Surveys
    a. Engage the services of a licensed land surveyor in accordance with the Project Controls (Surveying) specification. Prior to Final Completion, provide an as-built survey of the constructed facility, as specified.

18. Contract Close-Out Documents
    a. Submit Contract documentation as indicated in the specification for Contract Close-out.

PART 2 PRODUCTS (NOT USED)

PART 3 EXECUTION

3.01 SUBMITTAL SCHEDULE

A. Provide an initial submittal schedule at the pre-construction meeting for review by Owner and Engineer. Incorporate comments from Owner or Engineer into a revised submittal schedule.

B. Maintain the submittal schedule and provide sufficient copies for review by Owner and Engineer. An up-to-date submittal schedule shall be provided at each project progress meeting.

3.02 TRANSMITTALS

A. Prepare separate transmittal sheets for each submittal. Each transmittal sheet shall include at least the following: the Contractor's name and address, Owner's name, project name, project number, submittal number, description of submittal and number of copies submitted.

B. Submittals shall be transmitted or delivered directly to the office of the Engineer, as indicated in the Contact Documents or as otherwise directed by the Engineer.

C. Provide copies of transmittals forms or cover letters (without attachments) directly to the Resident Project Representative.

3.03 PROCEDURES

A. Action Submittals

1. Contractor's Responsibilities
    a. Coordination of Submittal Times: Prepare and transmit each submittal sufficiently in advance of performing the related work or other applicable activities, or within the time specified in the individual work of other related Sections, so that the installation will not be delayed by processing times including disapproval and resubmittal (if required). Coordinate with other submittals, testing, purchasing, fabrication, delivery and similar sequenced activities. Extensions to the Contract Time will not be approved for the Contractor's failure to transmit submittals sufficiently in advance of the Work.

b. The submittals of all shop drawings (including working drawings and product data) shall be sufficiently in advance of construction requirements to allow for possible need of re-submittals, including the specified review time for the Engineer.
c. No less than 30 calendar days will be required for Engineer's review time for shop drawings and O&M manuals involving only one engineering discipline. No less than 45 calendar days will be required for Engineer's review time for shop drawings and O&M manuals that require review by more than one engineering discipline. Resubmittals will be subject to the same review time.
d. Submittals of operation and maintenance data shall be provided within 30 days of approval of the related shop drawing(s).
e. Before submission to the Engineer, review shop drawings as follows:
    1) make corrections and add field measurements, as required
    2) use any color for its notations except red (reserved for the Engineer's notations) and black (to be able to distinguish notations on black and white documents)
    3) identify and describe each and every deviation or variation from Contract documents or from previous submissions, except those specifically resulting from a comment from the Engineer on a previous submission
    4) include the required Contractor's Certification statement
    5) provide field measurements (as needed)
    6) coordinate with other submittals
    7) indicate relationships to other features of the Work
    8) highlight information applicable to the Work and/or delete information not applicable to the Work
f. Submit the following number of copies:
    1) Shop drawings (including working drawings and product data) – Submit no fewer than six, and no more than nine; five of which will be retained by the Engineer.
    2) Samples – three
    3) Site Usage Plan – three copies
    4) Schedule of values – four copies
    5) Payment application format – four copies
g. If Contractor considers any correction indicated on the shop drawings to constitute a change to the Contract Documents, provide written notice thereof to the Engineer immediately; and do not release for manufacture before such notice has been received by the Engineer.
h. When the shop drawings have been completed to the satisfaction of the Engineer, carry out the construction in accordance therewith; and make no further changes therein except upon written instructions from the Engineer.

2. Engineer's Responsibilities
    a. Engineer will not review shop drawings (including working drawings and product data) that do not include the Contractor's approval stamp and required certification statement. Such submittals will be returned to the Contractor, without action, for correction.
    b. Partial shop drawings (including working drawings and product data) will not be reviewed. If, in the opinion of the Engineer, a submittal is incomplete, that submittal will be returned to the Contractor for completion. Such submittals may be returned with comments from Engineer indicating the deficiencies requiring correction.
    c. If shop drawings (including working drawings and product data) meet the submittal requirements, Engineer will forward copies to appropriate reviewer(s). Otherwise,

noncompliant submittals will be returned to the Contractor without action - with the Engineer retaining one copy.

d. Submittals which are transmitted in accordance with the specified requirements will be reviewed by the Engineer within the time specified herein. The time for review will commence upon receipt of submittal by Engineer.

3. Review of Shop Drawings (Including Working Drawings and Product Data) and Samples
   a. The review of shop drawings, working drawings, data and samples will be for general conformance with the design concept and Contract Documents. They shall not be construed:
      1) as permitting any departure from the Contract requirements
      2) as relieving the Contractor of responsibility for any errors, including details, dimensions, and materials
      3) as approving departures from details furnished by the Engineer, except as otherwise provided herein
   b. The Contractor remains responsible for details and accuracy, for coordinating the work with all other associated work and trades, for selecting fabrication processes, for techniques of assembly, and for performing work in a safe manner.
   c. If the shop drawings (including working drawings and product data) or samples as submitted describe variations and indicate a deviation from the Contract requirements that, in the opinion of the Engineer are in the interest of the Owner and are so minor as not to involve a change in Contract Price or Contract Time, the Engineer may return the reviewed drawings without noting an exception.
   d. Only the Engineer will utilize the color "RED" in marking submittals.
   e. Shop drawings will be returned to the Contractor with one of the following codes.
      1) "APPROVED" – This code is assigned when there are no notations or comments on the submittal. When returned under this code the Contractor may release the equipment and/or material for manufacture.
      2) "APPROVED AS NOTED" - This code is assigned when a confirmation of the notations and comments IS NOT required by the Contractor. The Contractor may release the equipment or material for manufacture; however, all notations and comments must be incorporated into the final product.
      3) "APPROVED AS NOTED/CONFIRM" - This combination of codes is assigned when a confirmation of the notations and comments is required by the Contractor. The Contractor may release the equipment or material for manufacture; however, all notations and comments must be incorporated into the final product. This confirmation shall specifically address each omission and nonconforming item that was noted. Confirmation is to be received by the Engineer within 15 calendar days of the date of the Engineer's transmittal requiring the confirmation.
      4) "APPROVED AS NOTED/RESUBMIT" - This combination of codes is assigned when notations and comments are extensive enough to require a resubmittal of the entire package. This resubmittal is to address all comments, omissions and non-conforming items that were noted. Resubmittal is to be received by the Engineer within 30 calendar days of the date of the Engineer's transmittal requiring the resubmittal.
      5) "NOT APPROVED" – This code is assigned when the submittal does not meet the intent of the contract documents. The Contractor must resubmit the entire package revised to bring the submittal into conformance. It may be necessary to resubmit using a different manufacturer/vendor to meet the requirements of the contract documents.

6) "COMMENTS ATTACHED" – This code is assigned where there are comments attached to the returned submittal, which provide additional data to aid the Contractor.
7) "RECEIPT ACKNOWLEDGED (Not subject to Engineer's Review or Approval)" – This code is assigned to acknowledge receipt of a submittal that is not subject to the Engineer's approval, and is being filed for informational purposes only. This code is generally used in acknowledging receipt of means and methods of construction work plans, field conformance test reports, and health and safety plans.

f. Repetitive Reviews: Shop drawings, O&M manuals and other submittals will be reviewed no more than twice at the Owner's expense. All subsequent reviews will be performed at the Contractor's expense. Reimburse the Owner for all costs invoiced by Engineer for the third and subsequent reviews.

4. Electronic Transmission
   a. Action Submittals may be transmitted by electronic means provided the following conditions are met:
      1) The above-specified transmittal form is included.
      2) All other requirements specified above have been met including, but not limited to, coordination by the Contractor, review and approval by the Contactor, and the Contractor's Certification.
      3) The submittal contains no pages or sheets large than 11 x 17 inches.
      4) With the exception of the transmittal sheet, the entire submittal is included in a single file.
      5) The electronic files are PDF format (with printing enabled).
      6) For Submittals that require certification, corporate seal, or professional embossment (i.e., P.E.s, Surveyors, etc.) transmit at least two hard-copy originals to the Engineer. In addition, provide additional photocopied or scanned copies, showing the required certification, corporate seal, or professional seal. The Engineer's review time will commence upon receipt of the hard copies of the submittal.

B. Informational Submittals

1. Contractor's Responsibilities
   a. Number of copies: Submit three copies, unless otherwise indicated in individual Specification sections
   b. Refer to individual technical Specification Sections for specific submittal requirements.

2. Engineer’s Responsibilities
   a. The Engineer will review each informational submittal within 15 days. If the informational submittal complies with the Contract requirements, Engineer will file for the project record and transmit a copy to the Owner. Engineer may elect not to respond to Contractor regarding informational submittals meeting the Contract requirements.
   b. If an informational submittal does not comply with the Contract requirements, Engineer will respond accordingly to the Contractor within 15 days. Thereafter, the Contractor shall perform the required corrective action, including retesting, if needed, until the submittal, in the opinion of the Engineer, is in conformance with the Contract Documents.

3. Electronic Transmission
   a. Informational submittals may be transmitted by electronic means providing all of the following conditions are met:
      1) The above-specified transmittal form is included.
      2) The submittal contains no pages or sheets large than 11 x 17 inches.
      3) With the exception of the transmittal sheet, the entire submittal is included in a single file.
      4) The electronic files are PDF format (with printing enabled).
      5) For Submittals that require certification, corporate seal, or professional embossment (i.e., P.E.s, Surveyors, etc.)) transmit two hard-copy originals to the Engineer.

END OF SECTION

© 2019 CDM Smith
All Rights Reserved

P.E. CERTIFICATION FORM

The undersigned hereby certifies that he/she is a professional engineer registered in the [State] [Commonwealth] of _____ and that he/she has been employed by

_____ to design
(Company Name)

_____
(Insert P.E. Responsibilities)

In accordance with Specification Section _____ for the

_____.
(Name of Project)

The undersigned further certifies that he/she has performed the said design in conformance with all applicable local, state and federal codes, rules and regulations; and, that his/her signature and P.E. stamp have been affixed to all calculations and drawings used in, and resulting from, the design.

The undersigned hereby agrees to make all original design drawings and calculations available to the

_____
(Insert Name of Owner)

or Owner's representative within seven days following written request therefor by the Owner.

_____	_____
P.E. Name	Company Name
_____	_____
Signature	Signature
_____	_____
P.E. Registration Number	Title
_____	
Address	
_____	
Address	

© 2019 CDM Smith
All Rights Reserved

SECTION 01310
CONSTRUCTION SCHEDULING

PART 1 GENERAL

A. Construction scheduling shall use the JEA Standard Critical Path Method (CPM) (latest) to schedule and manage the work and identify the two substantial completion milestones and project substantial completion.

B. Contractor to prepare and submit project schedules meeting the CPM Scheduling, Resource and Cost Loading, Narrative and Submittal requirements of the JEA Standards.

PART 2 PRODUCTS (NOT USED)

PART 3 EXECUTION (NOT USED)

END OF SECTION

© 2019 CDM Smith
All Rights Reserved

THIS PAGE INTENTIONALLY LEFT BLANK

© 2019 CDM Smith
All Rights Reserved

SECTION 01322
PHOTOGRAPHIC DOCUMENTATION

PART 1 GENERAL

1.01 REQUIREMENTS INCLUDED

A. The Contractor shall provide competent photographer to take construction record photographs periodically during course of the Work.

1.02 PHOTOGRAPHY REQUIRED

A. A preconstruction video is required to be taken prior to the start of construction. The preconstruction video is required to document the existing structures, equipment, existing site conditions and the existing conditions of the landscape buffer zone to establish a baseline for restoration work as required. The preconstruction video will be on DVD format and will provide the date and time of the video on the tape during playback. Copies of the preconstruction video shall be provided to Owner, and Engineer.

B. The CONSTRUCTOR shall provide land-based electronic photographs taken on cutoff date for each scheduled application for payment and immediately prior to initial construction.

C. For the land-based electronic photography of construction in the project site area, provide 10 electronic photographs with at least 5 different views each month taken at each stage of construction for each scheduled application for payment.

D. View and quantities required for land-based photography shall include:

1. At a minimum, views for the monthly progress photos shall document the status of:
   a. Mechanical equipment
   b. Existing facilities
   c. Electrical building, fuel tank, generator, and slabs including pump station, by-pass and flow meter vault
   d. Paving, grading, and drainage
   e. Site work
   f. Structural and electrical work
   g. Areas of construction that will be covered or buried during construction and nor visible after the completion

2. Provide three (3) CDs with each application for payment.

E. Photographic Records

1. All photography shall be digitally produced and electronically maintained.

2. The photographer shall maintain easily accessible electronic records for the duration of the entire project and then shall convey the electronic records to the Engineer and Owner upon final acceptance of project.

3. Photographer shall agree to furnish prints to Engineer and Owner at commercial rates applicable at time of purchase. Photographer shall also agree to participate as required in any litigation requiring the photographer as an expert witness.

4. The photographer shall provide the electronic records of the digital photographs to Engineer and Owner with copyrights assigned to the Owner.

1.03 COSTS OF PHOTOGRAPHY

A. The Contractor shall pay costs for specified photography. Additional prints beyond those specified here shall be charged to interested party.

PART 2 PRODUCTS

2.01 ELECTRONIC DELIVERY

A. Provide properly labeled CDs with electronic records of all photographs with identification for exposure number, orientation of view, and date of exposure.

B. A digital camera with resolution of at least 4.0 mega pixels shall be used to take the construction photographs.

PART 3 EXECUTION

3.01 TECHNIQUE

A. Factual presentation

B. Correct exposure and focus

1. High resolution and sharpness

2. Maximum depth-of-field

3. Minimum distortion

3.02 VIEWS REQUIRED

A. Photograph from location to adequately illustrate condition of construction and state of progress.

1. At successive periods of photography, take at least one photograph from the same overall view as previously.

2. Consult with the Engineer at each period of photography to review proposed views required.

3.03 DELIVERY OF PRINTS

A. Deliver electronic records to the Engineer and Owner to accompany each application for payment.

B. Distribution of prints and electronic records as soon as processed is anticipated to be as follows:

1. Owner (one set of electronic records)

2. Project Record File (one set of electronic records to be stored by Contractor)

3. Engineer (one set of electronic records)

C. No construction shall start until preconstruction photographs and video are completed and submitted to the Engineer and Owner.

3.04 AUDIOVISUAL RECORDING

A. The recordings shall contain coverage of all surface features within the construction zone of influence. These features shall include, but not be limited to, all pavement, parking spaces, curbs, driveways, sidewalks, culverts, headwalls, retaining walls, landscaping, trees, and fences. Of particular concern shall be the existence or non-existence of any faults, fractures or defects.

B. Video coverage shall be limited to one side of the street at one time and shall include all surface conditions located within the zone of influence supported by appropriate audio description. Panning, zoom-in and zoom-out rates shall be sufficiently controlled to maintain a clear view of the object.

C. Accompanying the video recording of each video tape shall be a corresponding and simultaneously recorded audio recording. This audio recording, exclusively containing the commentary of the camera operator, shall assist in viewer orientation and in any needed identification, differentiation, clarification, or objective description of the features being shown in the video portion of the recording. The audio recording shall also be free from any conversation between the camera operator and any other production technicians.

D. Visibility: All recording shall be performed during times of good visibility; no recording shall be done during periods of significant precipitation, mist or fog. The recording shall only be done when sufficient sunlight is present to properly illuminate the subject and to produce sharp, bright video recordings of those subjects.

E. In order to ensure the continuity of coverage, the coverage shall consist of a single continuous unedited recording which begins at one end of the construction area.

F. The average rate of travel during a particular segment of coverage shall be directly proportional to the number, size, and value of the surface features within that construction area's zone of influence.

G. Camera Operation

1 Camera Height and Stability: When conventional wheeled vehicles are used as conveyances for the recording system, the vertical distance between the camera lens and the ground shall not exceed 10 feet. The camera shall be firmly mounted such that transport of the camera during the recording process will not cause an unsteady picture.

2 Camera Control: Camera pan, tilt, zoom-in and zoom-out rates shall be sufficiently controlled such that recorded objects shall be clearly viewed during video tape playback. In

addition, all other camera and recording system controls, such as lens focus and aperture, video level, pedestal, white balance and electrical focus shall be properly controlled or adjusted to maximize picture quality.

3 Viewer Orientation Techniques: The audio and video portions of the recording shall maintain viewer orientation. To this end, overall establishing views of all visible house and business addresses shall be utilized. In areas where the proposed construction location will not be readily apparent to the video tape viewer, highly visible yellow flags shall be placed, by the Contractor, in such a fashion as to clearly indicate the proposed center line of construction.

END OF SECTION

© 2019 CDM Smith
All Rights Reserved

SECTION 01410
TESTING AND TESTING LABORATORY SERVICES

PART 1 GENERAL

1.01 REQUIREMENTS INCLUDED

A. Contractor shall engage the services of an Independent Testing Laboratory to perform testing specifically indicated on the Contract Documents. Contractor shall include cost of all testing and testing laboratory services in the bid price.

1.02 RELATED REQUIREMENTS

A. Conditions of the Contract: Inspections and testing required by laws, ordinances, rules, regulations, orders or approvals of public authorities.

B. Respective Sections: Certification of products.

C. Each Section listed: Laboratory tests required and standards for testing.

D. Testing Laboratory inspection, sampling and testing is required for but not limited to the following:

1. Site preparation is included in Section 02100, and in the Section 406 in JEA's Water and Sewer Standards Manual.

2. Earthwork is included in Section 02200, and in the JEA's Water and Sewer Standards Manual, Section 408.

3. Trenching, Backfilling and Compaction is included in Section 02221, and in the JEA's Water and Sewer Standards Manual, Section 408.

4. Granular Material is included in Section 02230.

5. Asphaltic Concrete Paving is included in Section 02513.

6. Concrete walkways and driveways are included in Section 02515.

7. Concrete Reinforcement is included in Section 03200.

8. Concrete is included in Section 03300.

9. Grout is included in Section 03600.

1.03 LIMITATIONS OF AUTHORITY OF TESTING LABORATORY

A. Laboratory is not authorized to:

1. Release, revoke, alter or enlarge on requirements of Contract Documents.

2. Approve or accept any portion of the work.

3. Perform any duties of the Contractor.

1.04 CONTRACTOR'S RESPONSIBILITIES

A. Cooperate with laboratory personnel, provide access to work, to manufacturer's operations.

B. Secure and deliver to the laboratory adequate quantities of representational samples of materials proposed to be used and which require testing.

C. Provide to the laboratory the preliminary design mix proposed to be used for concrete and other materials mixes which require control by the testing laboratory.

D. Materials and equipment used in the performance of work under this Contract are subject to inspection and testing at the point of manufacture or fabrication. Standard requirements for quality and workmanship are indicated in the Contract Documents. The Engineer may require the Contractor to provide statements or certificates from the manufacturers and fabricators that the materials and equipment provided by them are manufactured or fabricated in full accordance with the standard specifications for quality and workmanship indicated in the Contract Documents. All costs of this testing and providing statements and certificates shall be a subsidiary obligation of the Contractor, and no extra charge to the Owner shall be allowed on account of such testing and certification.

E. Furnish incidental labor and facilities:

1. To provide access to work to be tested.

2. To obtain and handle samples at the project site or at the source of the product to be tested.

3. To facilitate inspections and tests.

4. For storage and curing of test samples.

F. Notify laboratory sufficiently in advance of operations to allow for laboratory assignment of personnel and scheduling of tests.

1. When tests or inspections cannot be performed after such notice, reimburse Owner for laboratory personnel and travel expenses incurred due to Contractor's negligence.

G. Employ and pay for the services of the same or a separate, equally qualified independent testing laboratory to perform additional inspections, sampling and testing required for the Contractor's convenience.

PART 2 PRODUCTS (NOT USED)

PART 3 EXECUTION (NOT USED)

END OF SECTION

© 2019 CDM Smith
All Rights Reserved

SECTION 01445
PIPELINE TESTING AND CLEANING

PART 1 GENERAL

1.01 SCOPE OF WORK

A. Furnish all labor, materials, equipment and incidentals required and test and clean all new pipelines installed under this Contract as specified herein, including chlorination of all potable water lines.

1.02 RELATED WORK

A. Buried pipelines are included in Division 2 and JEA's Water and Wastewater Standards Manual (January 2019).

B. Above grade and exposed pipelines are included in Division 15.

PART 2 PRODUCTS (NOT USED)

PART 3 EXECUTION

3.01 GENERAL

A. The Contractor shall furnish all necessary equipment and labor for cleaning, testing and chlorinating the pipelines. The procedures and methods shall be approved by the Engineer.

B. The Contractor shall make any taps and furnish all necessary caps, plugs, etc, as required in conjunction with testing pipelines. The Contractor shall furnish a test pump, gauges and any other equipment required in conjunction with carrying out the hydrostatic tests.

3.02 CLEANING PIPELINES

A. All pipelines shall be cleaned and swabbed in accordance with the JEA Water and Wastewater Standards Section 350 – III.6.1

3.03 TESTING PRESSURE PIPELINES

A. All pressure pipelines shall be pressure and leakage tested following the requirements in JEA Water and Wastewater Standards Manual, latest edition, Section 350 – III-6.3.

3.04 CHLORINATION OF PIPELINES

A. All disinfection of pipelines shall be completed in accordance following the requirements in JEA Water and Wastewater Standards Manual, latest edition, Section 350 – III-6.2.

END OF SECTION

THIS PAGE INTENTIONALLY LEFT BLANK

© 2019 CDM Smith
All Rights Reserved

SECTION 01465
EQUIPMENT TESTING AND STARTUP

PART 1 GENERAL

1.01 SCOPE OF WORK

A. Provide a competent field services technician of the manufacturers of all equipment furnished under Divisions 11, 15 and 16 to supervise installation, adjustment, initial operation and testing, performance testing, final acceptance testing and startup of the equipment.

B. Perform specified equipment field performance tests, final acceptance tests and startup services.

1.02 RELATED WORK

A. Operation and Maintenance Data is included in Section 01730.

B. Performance and acceptance testing and startup requirements are included in the respective sections of Divisions 11, 15 and 16.

1.03 SUBMITTALS

A. Submit name, address and resume of proposed field services technicians at least 30 days in advance of the need for such services.

B. Submit, in accordance with Section 01300, detailed testing procedures for shop tests, field performance tests and final acceptance tests as specified in the various equipment sections. Submittals shall include the following:

1. Test procedures shall be submitted at least 30 days in advance of the proposed test dates and shall include at least the following information:
   a. Name, classification, model and serial number of equipment to be tested, including reference to specifications section number and title.
   b. Testing schedule of proposed dates and times for testing.
   c. Summary of power, lighting, water, etc, needs and identification of who will provide them.
   d. Outline specific assignment of the responsibilities of the Contractor and manufacturers' factory representatives or field service personnel.
   e. Detailed description of step-by-step testing requirements, with reference to appropriate standardized testing procedures (e.g., ASTM, WPCF Standard Methods, etc).
   f. Samples of forms to be used to collect and record test data and to present tabulated test results.

2. Copies of test reports upon completion of specified shop, performance and acceptance tests. Test reports shall incorporate the information provided in the test procedures submittals and modified to reflect actual conduct of the tests and the following additional information:
   a. Copy of all test data sheets and results of lab analyses.
   b. Summary comparison of specified test and performance requirements vs actual test results.

c. Should actual test results fail to meet specified test and performance requirements, describe action to be taken prior to re-testing the equipment.

3. Copies of the manufacturer's field service technician's report summarizing the results of his/her initial inspection, operation, adjustment and pre-tests. The report shall include detailed descriptions and tabulations of the points inspected, tests and adjustments made, quantitative results obtained, suggestions for precautions to be taken to ensure proper maintenance, and the equipment supplier's Certificate of Installation in the format specified herein.

1.04 REFERENCE STANDARDS

A. American Water Works Association (AWWA)

B. ASTM International

C. Water Environment Federation (WEF)

D. Standard Methods for the Examination of Water and Wastewater (Latest Revision)

E. Where reference is made to one of the above standards, the revision in effect at the time of bid opening shall apply.

1.05 QUALITY ASSURANCE

A. Field service technicians shall be competent and experienced in the proper installation, adjustment, operation, testing and startup of the equipment and systems being installed.

B. Manufacturers' sales and marketing personnel will not be accepted as field service technicians unless they can prove their qualifications.

PART 2 PRODUCTS (NOT USED)

PART 3 EXECUTION

3.01 PRELIMINARY REQUIREMENTS

A. After installation of the equipment has been completed and the equipment is presumably ready for operation, before it is operated by others, the manufacturer's field service technician shall inspect, operate, test and adjust the equipment. The inspection shall include at least the following points where applicable:

1. Soundness (without crack or otherwise damaged parts).

2. Completeness in all details, as specified and required.

3. Correctness of setting, alignment and relative arrangement of various parts.

4. Adequacy and correctness of packing, sealing and lubricants.

B. The operation, testing and adjustment shall be as required to prove that the equipment has been left in proper condition for satisfactory operation under the conditions specified.

C. Upon completion of this work, the manufacturer's field service technician shall submit a signed report of the results of his/her inspection, operation, adjustments and tests.

3.02 WITNESS REQUIREMENTS

A. Shop tests or factory tests may be witnessed by the Owner and/or Owner's representatives, as required by the various equipment specifications.

B. Field performance and acceptance tests shall be performed in the presence of the Owner, the Owner's designed personnel and/or Owner's representatives.

3.03 STARTUP AND ACCEPTANCE OF THE PUMP STATION

A. General Requirements

1. Successfully execute the step-by-step procedure of startup, normal operation, shutdown, and performance demonstration specified herein.

2. The startup and performance demonstration shall be successfully executed prior to Substantial Completion and acceptance by the Owner of the facility and its related systems.

3. All performance tests and inspections shall be scheduled at least 10 working days in advance or as otherwise specified with the Owner and the Engineer. All performance tests and inspections shall be conducted during the work week of Monday through Friday, unless otherwise specified.

B. Preparation for Startup

1. All mechanical and electrical equipment shall be checked to ensure that it is in good working order and properly connected. Preliminary run-ins of the pumps and other remaining equipment shall be made in accordance with manufacturer’s recommendations. All systems shall be cleaned and purged as required. All pipelines which are hydraulically checked shall be drained and returned to their original condition once the water testing is complete.

2. All instruments and controls shall be calibrated through their full range. All other adjustments required for proper operation of all instrumentation and control equipment shall be made.

3. Perform all other tasks needed for preparing and conditioning the facility for proper operation.

4. No testing or equipment operation shall take place until it has been verified by the Engineer that all specified safety equipment has been installed and is in good working order.

5. No testing or equipment operation shall take place until it has been verified by the Engineer that all lubricants, tools, maintenance equipment, spare parts and approved equipment operation and maintenance manuals have been furnished as specified.

C. Facilities Startup

1. Startup period shall not begin until all new facilities and equipment have been tested as specified and are ready for operation. The Owner shall receive spare parts, safety equipment, tools and maintenance equipment, lubricants, approved operation and maintenance data and the specified operation and maintenance instruction prior to the startup with raw water. All valve tagging shall also be complete prior to this startup.

2. Demonstrate a 30 consecutive 24 hour day period of successful operation of the facility as a prerequisite of Substantial Completion and Acceptance.

3. In the event of failure to demonstrate satisfactory performance of the facility on the first or any subsequent attempt, all necessary alterations, adjustments, repairs and replacements shall be made. When the facility is again ready for operation, it shall be brought on line and a new test shall be started. This procedure shall be repeated as often as necessary until the facility has operated continuously to the satisfaction of the Owner and Engineer, for the specified duration.

4. The Owner will furnish all operating personnel (other than vendor's or subcontractor's service personnel) needed to operate equipment during the final test period; however, said personnel will perform their duties under Contractor's direct supervision. Until performance tests are completed and units and systems are accepted by the Owner as substantially complete, the Contractor shall be fully responsible for the operation and maintenance of all new facilities.

5. The Owner will provide all necessary electricity. However, the Contractor shall provide all necessary personnel of the various construction trades, i.e., electricians, plumbers, etc, and field service personnel of the major equipment suppliers on an 8 hour per day basis at the facility. Major equipment suppliers shall include, but not be limited to, the following:
   a. Instrumentation and Control Equipment
   b. All Pumping Equipment
   c. Generator Equipment
   d. HVAC
   e. Conveyance Systems

6. Do not, at any time, allow the facility to be operated in a manner which subjects equipment to conditions that are more severe than the maximum allowable operating conditions for which the equipment was designed.

REMAINDER OF PAGE INTENTIONALLY LEFT BLANK
(*Form follows*)

© 2019 CDM Smith
All Rights Reserved

EQUIPMENT SUPPLIER'S CERTIFICATE OF INSTALLATION

Owner _____

Project _____

Contract No. _____

EQUIPMENT SPECIFICATION SECTION _____

EQUIPMENT DESCRIPTION _____

I _____, Authorized representative of
(Print Name)

_____
(Print Manufacturer's Name)

hereby CERTIFY that _____
(Print equipment name and model with serial no.)

_____

installed for the subject project has (have) been installed in a satisfactory manner, has (have) been tested and adjusted, and is (are) ready for final acceptance testing and operation on :

Date_____

Time_____

CERTIFIED BY: _____
(Signature of Manufacturer's Representative)

Date:_____

END OF SECTION

THIS PAGE INTENTIONALLY LEFT BLANK

© 2019 CDM Smith
All Rights Reserved

SECTION 01500
TEMPORARY FACILITIES

PART 1 GENERAL

1.01 SCOPE OF WORK

A. The Contractor shall furnish all labor, equipment, materials, and incidentals necessary and provide separate temporary facilities for the Contractor's use and the Engineer's use, as specified herein.

B. The Contractor shall operate and maintain temporary facilities for the duration of the project and as directed by the Engineer. All cost and use charges for temporary facilities shall be included in the Contract Price.

1.02 RELATED WORK

A. Control of Work is included in Section 01046.

B. Special Provisions is included in Section 01170.

1.03 SUBMITTALS

A. The Contractor shall submit shop drawings and product data, in accordance with Section 01300, showing materials of construction and details of installation for:

1. Site Plan: Show the proposed locations for temporary facilities including offices, temporary utilities, storage containers/buildings, vehicle access and parking areas, material laydown and staging areas, temporary fencing, and other security measures.

2. Temporary Fence: Layout drawings which indicate dimensions, access to fire hydrants, gate locations and opening sizes, and other site specific requirements.

3. Project Sign: Layout, graphics, and wording.

B. Submittals shall be received by the Engineer no later than the date of the Preconstruction Meeting.

1.04 QUALITY ASSURANCE

A. Temporary facilities shall comply with all applicable state and local ordinances, codes and regulations.

B. The Contractor shall coordinate with authorities having jurisdiction to inspect (and test if required) temporary facilities.

C. The Contractor shall obtain all required permits for temporary facilities.

1.05 DEFINITIONS

A. Duration of the project: The period of time from the date of the Notice to Proceed to the date of Final Completion, inclusive.

PART 2 PRODUCTS

2.01 MATERIALS

A. Temporary Fence: Fabric shall be No. 9 gauge galvanized wire woven in 2-in diamond mesh with top and bottom twisted selvage. Intermediate and terminal posts shall be galvanized steel H or pipe, minimum 2-3/8-in OD line posts, 2-7/8-in OD corner and pull posts, and 1-5/8-in OD top rails.

B. Project Sign: Plywood shall be A-A EXT-APA grade, 1-in thick. Posts and braces shall be pressure treated lumber.

2.02 EQUIPMENT

A. Fire Extinguishers: Provide portable, UL-rated with class and extinguishing agent required by locations and classes of fire exposure. Provide at least one for each trailer/office.

B. Temporary Heat: Provide vented, self-contained, liquid propane gas or fuel oil heaters with individual space thermostatic control. Equipment shall be listed and labeled for type of fuel consumed and marked for intended use.

PART 3 EXECUTION

3.01 CONTRACTOR'S FIELD OFFICE

A. The Contractor shall provide a temporary field office(s) for the Contractor's use for the duration of the project. An authorized representative of the Contractor shall be present at all times while the Work is in progress. Instructions received at the Contractor field office from the Engineer shall be considered delivered to the Contractor.

B. The Contractor shall locate field office(s) in accordance with approved shop drawings and as directed by the Owner.

C. The Contractor shall establish and occupy field office within 30 days of the Notice to Proceed, unless otherwise approved by the Engineer or Owner.

3.02 TEMPORARY POWER AND LIGHT

A. The Contractor shall furnish temporary light and power, including 220 Volt service for welding, complete with wiring, lamps and similar equipment as required to adequately light all work areas and with sufficient power capacity to meet the project needs. Make all necessary arrangements with the local electric company for temporary electric service and pay all expenses in connection therewith.

B. The Contractor shall provide connections to existing facilities sized to provide service required for power and lighting. The Contractor shall pay the costs of power used.

C. The Contractor shall provide properly configured NEMA polarized outlets to prevent insertion of 110-120 Volt plugs into higher voltage outlets. For connection of power tools and equipment, provide outlets equipped with ground-fault circuit interrupters, reset button and pilot light.

D. The Contractor shall provide grounded extension cords. Use heavy duty cords where exposed to abrasion and traffic. The Contractor shall provide waterproof connectors to connect separate lengths of electric cords if more than one length is required.

E. The Contractor shall provide general service incandescent lamps as required for adequate illumination. The Contractor shall provide guard cages or tempered glass enclosures where exposed to breakage. The Contractor shall provide exterior fixtures where exposed to moisture.

3.03 TEMPORARY HEAT

A. The Contractor shall provide heat as may be necessary for materials and for proper execution, protection and drying-out of the Work.

3.04 WEATHER PROTECTION

A. The Contractor shall furnish, install and maintain temporary heat and enclosures to provide adequate working areas for personnel during the cold weather months.

B. The Contractor shall furnish temporary heating units (UL or FM listed) to maintain reasonable temperatures within temporary enclosures.

3.05 TEMPORARY AIR, STEAM AND WATER

A. The Contractor shall provide all air, steam and water, including temporary piping and appurtenances required for cleaning and testing pipelines and equipment. The Contractor shall remove temporary piping and appurtenances upon approval of equipment being tested.

3.06 SANITARY FACILITIES

A. The Contractor shall provide self-contained, single occupant toilet units of the chemical, aerated recirculation, or combustion type, properly vented and fully enclosed in a fiberglass or other approved non-absorbent shell.

3.07 CONSTRUCTION AIDS

A. The Contractor shall provide temporary elevators, hoists, cranes, scaffolding and platforms as necessary to perform the Work. The Contractor shall provide temporary stairs where ladders are not adequate. The Contractor shall protect permanent stairs from damage from construction operations.

3.08 VEHICLE ACCESS AND PARKING

A. The Contractor shall provide temporary access roads, parking areas, traffic control devices and staging areas as approved by the Engineer and Owner.

3.09 WASTE MANAGEMENT

A. The Contractor shall provide covered dumpster, minimum 4-cubic yards, dedicated for field office waste. The Contractor shall provide separate covered dumpster of adequate size for construction debris. The Contractor shall empty dumpsters on a regular basis and as directed by the Owner’s Representative. Dumpsters shall not exceed their capacities at any time.

3.10 PROJECT SIGNS

A. The Contractor shall furnish and install the project signs indicated in the Contract Documents, Section 01580. Signs shall be placed as directed by the Owner's Representative; and, shall remain maintained in good condition for the life of the construction period.

B. The Contractor shall remove signs at final acceptance, unless otherwise directed.

3.11 REMOVAL AND RESTORATION

A. The Contractor shall remove each temporary facility complete when need for its service has ended and as approved by the Engineer. The Contractor shall coordinate removal of temporary facilities with authorities having jurisdiction.

B. The Contractor shall restore all improvements damaged by the installation, operation, and removal of the temporary facilities. The Contractor shall obtain prior approval from Owner and Engineer for restoration work.

3.12 FIRE EXTINGUISHERS

A. The Contractor shall provide portable UL-rated, Class A fire extinguishers for temporary offices and similar spaces. In other locations, provide portable UL-rated Class ABC dru chemical extinguishers or a combination of NFPA recommended Classes for the exposure. The Contractor shall comply with NFPA 10 and 241 for classification, extinguishing agent and size required by location and class of fire exposure.

END OF SECTION

© 2019 CDM Smith
All Rights Reserved

SECTION 01562
DUST CONTROL

PART 1 GENERAL

1.01 SCOPE OF WORK

A. Perform dust control operations, in an approved manner, whenever necessary or when directed by the Engineer, even though other work on the project may be suspended. Dust control shall be generally accomplished by the use of water; however, the use of calcium chloride may be used when necessary to control dust nuisance.

B. Calcium chloride shall conform to AASHTO M144, Type I except the requirements for "total alkali chlorides" and other impurities shall not apply.

C. Methods of controlling dust shall meet all air pollutant standards as set forth by Federal and State regulatory agencies.

END OF SECTION

© 2019 CDM Smith
All Rights Reserved

THIS PAGE INTENTIONALLY LEFT BLANK

© 2019 CDM Smith
All Rights Reserved

SECTION 01580
PROJECT IDENTIFICATION AND SIGNS

PART 1 GENERAL

1.01 REQUIREMENTS

A. Furnish, install and maintain project identification sign.

B. Remove sign on completion of construction.

C. Allow no other signs to be displayed.

1.02 RELATED WORK

1.03 SUBMITTALS

A. Submit in accordance with the requirements of Section 01300.

1.04 PROJECT IDENTIFICATION SIGN

A. One painted sign, of not less than 32 square feet (3 square meters) area, with painted graphic content to include:

1. Title of Project.

2. Name of Owner.

3. Names and titles of authorities:

4. Names and title of:
   a. Engineer.
   b. Professional Consultants.

5. Prime Contractor.

6. Major subcontractors.

B. Graphic design, style of lettering and colors: As approved by the Engineer and subject to the approval of the local Community Appearance Board (CAB) or its equivalent and applicable local regulations for signs.

C. Erect on the site at a lighted location of high public visibility, adjacent to main entrance to site, as approved by the Engineer and the Owner.

1.05 INFORMATIONAL SIGNS

A. Painted signs with painted lettering, or standard products.

1. Size of signs and lettering: as required by regulatory agencies, or as appropriate to usage.

2. Colors: as required by regulatory agencies, otherwise of uniform colors throughout Project.

B. Erect at appropriate location to provide required information.

1.06 QUALITY ASSURANCE

A. Sign Painter: Professional Experience in type of work required.

B. Finishes, Painting: Adequate to resist weathering and fading for scheduled construction period.

PART 2 PRODUCTS

2.01 SIGN MATERIALS

A. Structure and Framing: May be new or used, wood or metal, in sound condition structurally adequate to work and suitable for specified finish.

B. Sign Surfaces: Exterior softwood plywood with medium density overlay, standard large sizes to minimize joints.

1. Thickness: As required by standards to span framing members, to provide even, smooth surface without waves or buckles.

C. Rough Hardware: Galvanized

D. Paint: Exterior quality, as specified in Division 9.

1. Use Bulletin colors for graphics.

2. Colors for structure, framing, sign surfaces and graphics: As selected by the Engineer.

PART 3 EXECUTION

3.01 PROJECT IDENTIFICATION SIGN

A. Paint exposed surfaces of supports, framing and surface material; one coat of primer and one coat of exterior paint.

B. Paint graphics in styles, sizes and colors selected.

3.02 MAINTENANCE

A. Maintain signs and supports in a neat, clean condition; repair damages to structure, framing or sign.

3.03 REMOVAL

A. Remove signs, framing, supports and foundations at completion of project.

END OF SECTION

© 2019 CDM Smith
All Rights Reserved

SECTION 01600
DELIVERY, STORAGE AND HANDLING

PART 1 GENERAL

1.01 SCOPE OF WORK

A. This Section specifies the general requirements for the delivery handling, storage and protection for all items required in the construction of the work. Specific requirements, if any, are specified with the related item.

1.02 TRANSPORTATION AND DELIVERY

A. Transport and handle items in accordance with manufacturer's instructions.

B. Schedule delivery to reduce long term on-site storage prior to installation and/or operation. Under no circumstances shall equipment be delivered to the site more than one month prior to installation without written authorization from the Engineer.

C. Coordinate delivery with installation to ensure minimum holding time for items that are hazardous, flammable, easily damaged or sensitive to deterioration.

D. Deliver products to the site in manufacturer's original sealed containers or other packing systems, complete with instructions for handling, storing, unpacking, protecting and installing.

E. All items delivered to the site shall be unloaded and placed in a manner which will not hamper the Contractor's normal construction operation or those of subcontractors and other contractors and will not interfere with the flow of necessary traffic.

F. Provide necessary equipment and personnel to unload all items delivered to the site.

G. Promptly inspect shipment to assure that products comply with requirements, quantities are correct and items are undamaged. For items furnished by others (i.e., Owner, other Contractors), perform inspection in the presence of the Engineer. Notify Engineer verbally, and in writing, of any problems.

H. If any item has been damaged, such damage shall be repaired at no additional cost to the Owner.

1.03 STORAGE AND PROTECTION

A. Store and protect products in accordance with the manufacturer's instructions, with seals and labels intact and legible. Storage instruction shall be studied by the Contractor and reviewed with the Engineer by him/her. Instruction shall be carefully followed and a written record of this kept by the Contractor. Arrange storage to permit access for inspection.

B. Store loose granular materials on solid flat surfaces in a well-drained area. Prevent mixing with foreign matter.

C. Cement and lime shall be stored under a roof and off the ground and shall be kept completely dry at all times. All structural, miscellaneous and reinforcing steel shall be stored off the ground or otherwise to prevent accumulations of dirt or grease and in a position to prevent accumulations of standing water and to minimize rusting. Beams shall be stored with the webs

vertical. Precast concrete shall be handled and stored in a manner to prevent accumulations of dirt, standing water, staining, chipping or cracking. Brick, block and similar masonry products shall be handled and stored in a manner to reduce breakage, cracking and spalling to a minimum.

D. All mechanical and electrical equipment and instruments subject to corrosive damage by the atmosphere if stored outdoors (even though covered by canvas) shall be stored in a weathertight building to prevent injury. The building may be a temporary structure on the site or elsewhere, but it must be satisfactory to the Engineer. Building shall be provided with adequate ventilation to prevent condensation. Maintain temperature and humidity within range required by manufacturer.

1. All equipment shall be stored fully lubricated with oil, grease and other lubricants unless otherwise instructed by the manufacturer.

2. Moving parts shall be rotated a minimum of once weekly to ensure proper lubrication and to avoid metal-to-metal "welding". Upon installation of the equipment, the Contractor shall start the equipment, at least half load, once weekly for an adequate period of time to ensure that the equipment does not deteriorate from lack of use.

3. Lubricants shall be changed upon completion of installation and as frequently as required thereafter during the period between installation and acceptance. New lubricants shall be put into the equipment at the time of acceptance.

4. Prior to acceptance of the equipment, the Contractor shall have the manufacturer inspect the equipment and certify that its condition has not been detrimentally affected by the long storage period. Such certifications by the manufacturer shall be deemed to mean that the equipment is judged by the manufacturer to be in a condition equal to that of equipment that has been shipped, installed, tested and accepted in a minimum time period. As such, the manufacturer will guaranty the equipment equally in both instances. If such a certification is not given, the equipment shall be judged to be defective. It shall be removed and replaced at the Contractor's expense.

E. All paint and other coating products shall be stored in areas protected from the weather. Follow all storage requirements set forth by the paint and coating manufacturers.

END OF SECTION

© 2019 CDM Smith
All Rights Reserved

SECTION 01700
CONTRACT CLOSEOUT

PART 1 GENERAL

1.01 SCOPE OF WORK

A. This Section specifies administrative, verification and procedural requirements for project closeout, including but not limited to:

1. Cleaning (Section 01710).

2. Project Record Documents (Section 01720).

3. Spare parts and maintenance materials (spare paint, lubricants, special tools) (applicable Sections in Divisions 9 through 16).

4. Record Shop Drawings (Section 01300).

5. Warranties, guarantees, and bonds (Section 01740) and applicable Sections in Technical Divisions 10 through 16.

6. As-built construction schedule (Section 01310).

7. Permit close-outs including Certificate of Occupancy or Certificate of Completion.

1.02 RELATED WORK

A. Operation and Maintenance (O&M) data and manuals (Section 01730) and applicable Sections in Technical Divisions.

B. Certified Surveyor documentation submittals (Section 01050).

1.03 CLOSEOUT PROCEDURES

A. Provide all deliverables as specified, prior to submitting the final payment application.

B. Provide submittals to Engineer that are required by governing or other authorities having applicable jurisdiction including but not limited to permit close out information, certificates of occupancy, etc.

C. Submit Application for Final Payment identifying total adjusted Contract Sum, previous payments and sum remaining due, following submittal and approval of Record Documents and Record Drawings.

D. Submit Contractor's Final Release and Release of Liens with final payment application.

1.04 FINAL CLEANING

A. Contractor to complete final cleaning prior to submittal of the final application for payment.

B. Contractor to comply with requirements as specified in Section 01710.

PART 2 PRODUCTS (NOT USED)

PART 3 EXECUTION (NOT USED)

END OF SECTION

© 2019 CDM Smith
All Rights Reserved

SECTION 01710
CLEANING

PART 1 GENERAL

1.01 SCOPE OF WORK

A. Execute cleaning, during progress of the work, and at completion of the work, as required by General Conditions.

1.02 RELATED WORK

A. Standard General Conditions of the Construction Contract are included in the front end documents.

1.03 DISPOSAL AND CLEANING

A. Conduct cleaning and disposal operations to comply with codes, ordinances, regulations and anti-pollution laws.

PART 2 PRODUCTS

2.01 MATERIALS

A. Use only those cleaning materials which will not create hazards to health or property and which will not damage surfaces.

B. Use only those cleaning materials and methods recommended by manufacturer of the surface material to be cleaned.

C. Use cleaning materials only on surfaces recommended by cleaning material manufacturer.

PART 3 EXECUTION

3.01 DURING CONSTRUCTION

A. Execute periodic cleaning to keep the work, the site and adjacent properties free from accumulations of waste materials, rubbish and windblown debris, resulting from construction operations.

B. Provide on-site containers for the collection of waste materials, debris and rubbish.

C. Remove waste materials, debris and rubbish from the site periodically and dispose of at legal disposal areas away from the site.

3.02 DUST CONTROL

A. Clean interior spaces prior to the start of finish painting and continue cleaning on an as-needed basis until painting is finished.

B. Schedule operations so that dust and other contaminants resulting from cleaning process will not fall on wet or newly-coated surfaces.

3.03 FINAL CLEANING

A. Employ skilled workmen for final cleaning.

B. Remove grease, mastic, adhesives, dust, dirt, stains, fingerprints, labels and other foreign materials from sight-exposed interior and exterior surfaces.

C. Wash and shine glazing and mirrors.

D. Polish glossy surfaces to a clear shine.

E. Ventilating Systems:

1. Clean permanent filters and replace disposable filters if units were operated during construction.

2. Clean ducts, blowers and coils if units were operated without filters during construction.

F. Broom clean exterior paved surfaces; rake clean other surfaces of the grounds.

G. Prior to final completion, or Owner occupancy, conduct an inspection of sight-exposed interior and exterior surfaces and all work areas, to verify that the entire work is clean.

END OF SECTION

© 2019 CDM Smith
All Rights Reserved

SECTION 01720
PROJECT RECORD DOCUMENTS

PART 1 GENERAL

1.01 SCOPE

A. The Contractor shall keep and maintain, at the job site, a copy of contract documents, marked up to indicate all changes made during the course of a project, as specified herein.

1.02 RELATED REQUIREMENTS

A. Contract close-out submittals are included in Section 01700.

B. Warranties and bonds are included in Section 01740.

C. As-built construction schedules are included in Section 01310.

D. As-built wiring diagrams are included in Section 01730.

E. As-built surveys are included in Section 01050.

F. Record shop drawings are included in Section 01300.

G. Record documents shall be in accordance with JEA Water and Wastewater Standards, Section 501 (January 2019 or latest).

1.03 REQUIREMENTS INCLUDED

A. Contractor shall maintain a record copy of the following documents, marked up to indicate all changes made during the course of a project:

1. Contract Drawings
2. Specifications
3. Addenda
4. Change orders and other modifications to the contract
5. Engineer's and Owner's field orders or written instructions
6. Approved shop drawings, working drawings, and samples
7. Field test records
8. Construction photographs

B. Contractor shall assemble copies of the following documents for turnover to the Engineer at the end of the project, as specified.

1. Field Orders, Change Orders, Design Modifications, and RFIs

2. Field Test records

3. Permits and permit close-outs (final approvals)

4. Certificate of Occupancy or Certificate of Completion, as applicable

5. Laboratory test reports

6. Certificates of Compliance for materials and equipment

7. Record Shop Drawings

8. Samples

C. RECORD DRAWINGS

1. The Contractor shall annotate (mark-up) the Contract Drawings to indicate all project conditions, locations, configurations, and any other changes or deviations that vary from the original Contract Drawings. This requirement includes, but is not limited to, buried or concealed construction, and utility features that are revealed during the course of construction. Special attention shall be given to recording the locations (horizontal and vertical) and material of all buried utilities that are encountered during construction – whether or not they were indicated on the Contract Drawings. The record information added to the drawings may be supplemented by detailed sketches, if necessary, clearly indicating, the Work, as constructed.

2. These annotated Contract Drawings constitute The Contractor's Record Drawings and are actual representations of as-built conditions, including all revisions made necessary by change orders, design modifications, requests for information and field orders.

3. Record drawings shall be accessible to the Owner and Engineer at all times during the construction period.

4. Record documents shall be in accordance with JEA Water and Wastewater Standards, Section 501 (January 2019 or latest).

PART 2 – PRODUCTS (NOT USED)

PART 3 – EXECUTION

3.01 MAINTENANCE OF RECORD DOCUMENTS AND SAMPLES

A. The Contractor shall store documents and samples in Contractor's field office apart from documents used for construction.

1. The Contractor shall provide files and racks for storage of the record documents.

2. The Contractor shall provide locked cabinet(s) or secure storage space for storage of samples.

B. File documents and samples in accordance with Construction Specifications Institute (CSI) format.

C. Maintain documents in a clean, dry, legible, condition and in good order. Do not use record documents for construction purposes.

D. Make documents and sample available for inspection by the Engineer or Owner at all times.

E. Up-to-date Record Drawings may be a pre-requisite of processing periodic monthly pay applications, if so specified under the section for progress payments.

3.02 MARKING METHOD

A. Use the color Red (indelible ink) to record information on the Drawings and Specifications,

B. Label each document "PROJECT RECORD" in neat large printed letters.

C. Unless otherwise specified elsewhere, notations shall be affixed to hardcopies of documents.

D. Record information contemporaneously with construction progress.

E. Legibly mark drawings with as-built information:

1. Elevations and dimensions of structures and structural elements.

2. All underground utilities (piping and electrical), structures, and appurtenances
   a. Changes to existing structure, piping and appurtenance locations.
   b. Record horizontal and vertical locations of underground structures, piping, utilities and appurtenances, referenced to permanent surface improvements.
   c. Record actual installed pipe material, class, size, joint type, etc.

3.03 RECORD INFORMATION COMPILATION

A. Do not conceal any work until the required information is acquired.

B. Items to be recorded include, but are not limited to:

1. Location of internal utilities and appurtenances concealed in the construction – referenced to visible and accessible features.

2. Field changes of dimensions and/or details;
   a. Interior equipment and piping relocations.
   b. Architectural and structural changes, including relocation of doors, windows, etc.
   c. Architectural schedule changes.

C. Changes made by Field Order, Change Order, design modification, and RFI.

D. Details not indicated on the original Contract Drawings.

E. Specifications - legibly mark each Section to record:

1. Manufacturer, trade name, catalog number, and Supplier of each product and item of equipment actually installed.

2. Changes made by Field Order, Change Order, RFI, and approved shop drawing.

3.04 SUBMITTAL

A. If specified under the section for progress payments, monthly applications for payment will be contingent upon up-to-date Record Drawings. If requested by the Engineer or Owner, Contractor shall provide a copy of the Record Drawings, or present them for review prior to processing monthly applications for payment.

B. Upon substantial completion of the Work and prior to final acceptance, the Contractor shall finalize and deliver a complete set of Record Drawings to the Engineer conforming to the construction records of the Contractor. The set of drawings shall consist of corrected and annotated drawings showing the recorded location(s) of the Work. Unless specified otherwise elsewhere, Record Drawings shall be in the form of a set of prints with annotations carefully and neatly superimposed on the drawings in red.

C. Upon substantial completion of the Work and prior to final acceptance, the Contractor shall finalize and deliver a complete set of Record Documents to the Engineer conforming to the construction records of the Contractor. The set of documents shall consist of corrected and annotated documents showing the as-installed equipment and all other as-built conditions not indicated on the Record Drawings.

D. The information submitted by the Contractor into the Record Drawings and Record Documents will be assumed to be correct, and the Contractor shall be responsible for the accuracy of such information, and shall bear the costs resulting from the correction of incorrect data.

E. Delivery of Record Drawings and Record Documents to the Engineer will be a prerequisite to Final payment.

F. The Contractor shall maintain a copy of all books, records, and documents pertinent to the performance under this Agreement for a period of five years following completion of the contract.

END OF SECTION

© 2019 CDM Smith
All Rights Reserved

SECTION 01730
OPERATION AND MAINTENANCE DATA AND ASSET MANAGEMENT

PART 1 GENERAL

1.01 SCOPE OF WORK

A. This Section includes procedural requirements for compiling and submitting operation and maintenance data required to complete the project. In addition to the requirements specified herein, Contractor operations and maintenance data shall be as required in JEA Water and Wastewater Standards – Section 445.

1.02 RELATED WORK

A. Submittals are included in Section 01300.

B. Contract closeout is included in Section 01700.

C. Warranties and Bonds are included in Section 01740.

1.03 OPERATING MANUALS

A. The Manufacturer shall provide specific operation and maintenance instructions for all electrical, mechanical, and instrumentation & controls equipment furnished under various technical specifications Sections.

B. Six complete sets of operation and maintenance manuals approved by the Engineer covering all equipment furnished under Divisions 11, 13, 15 and 16 shall be delivered at least 30 days prior to scheduled start-up directly to the Owner. One set of originals must be part of the six sets of operation and maintenance instructions required, including original manuals covering components manufactured by others.

C. An electronic copy of the manual will be provided with each hard copy submittal.

D. Separate manuals shall be provided for each type of equipment, or each Section number. Each manual shall contain the following specific requirements. Manuals that do not meet the requirements will be rejected and Equipment Supplier/Manufacturer will bear all expenses to resubmit the manual to meet the following requirements.

1. Format and Materials
   a. Binders:
      1) Commercial quality three ring binders with durable and cleanable plastic covers
      2) Maximum ring width capacity: 3 inches
      3) When multiple binders are used, correlate the data into related consistent groupings/volumes.
   b. Identification: Identify each volume on the cover and spine with typed or printed title "OPERATING AND MAINTENANCE INSTRUCTIONS". Include the following:
      1) Title of Project.
      2) Identify the general subject matter covered in the manual.
      3) Identify structure(s) and/or location(s), of the equipment provided.
      4) Specification Section number.

c. 20 lb loose leaf paper, with hole reinforcement
d. Page size: 8-1/2 inch by 11 inch
e. Provide heavy-duty fly leafs (section separators), matching the table of contents, for each separate product, each piece of operating equipment, and organizational sections of the manual.
f. Provide reinforced punched binder tab; bind in with text.
g. Reduce larger drawings and fold to the size of text pages - but not larger than 11 inches x 17 inches - or provide a suitable clear plastic pocket (with drawing identification) for such folded drawings/diagrams.

2. Contents:
   a. A table of contents/Index, divided into section reflective of the major components provided.
   b. Specific description of each system and components
   c. Name, address, telephone number(s) and e-mail address(es) of vendor(s) and local service representative(s)
   d. Equipment Supplier/Manufacturer shall clearly strike out portions of manual that do not apply to the project. Manual will be rejected until inapplicable information is deleted and only applicable information is clearly indicated
   e. Specific on-site operating instructions (including starting and stopping procedures)
   f. Safety considerations
   g. Project specific operational procedures and recommended log sheet(s).
   h. Project specific maintenance procedures
   i. Manufacturer's operating and maintenance instructions – specific to the project
   j. Copy of each wiring diagram
   k. Copy of approved shop drawing(s) and Contractor's coordination/layout drawing(s)
   l. List of spare parts and recommended quantities
   m. Product Data: Mark each sheet to clearly identify specific products and component parts and data applicable to installation. Delete inapplicable information.
   n. Drawings: Supplement product data to illustrate relations of component parts of equipment and systems, to show control and flow diagrams
   o. Provide logical sequence of instructions for each procedure, incorporating manufacturer's instructions specified.
   p. Warranties and Bonds, as specified in the General Conditions
   q. Equipment attributes sheet for submittal of nameplate data
   r. Electronic copy of manual on CD

3. Transmittals
   a. Prepare separate transmittal sheets for each manual. Each transmittal sheet shall include at least the following: Contractor's name and address, Owner's name, project name, project number, submittal number, description of submittal and number of copies submitted.
   b. Submittals shall be transmitted or delivered directly to the office of the Engineer, as indicated in the Contact Documents or as otherwise directed by the Engineer.
   c. Provide copies of transmittals (only, i.e., without copies of the respective submittal) directly to the Resident Project Representative.

E. Manuals for Equipment and Systems - In addition to the requirements listed above, for each System, provide the following:

1. Overview of system and description of unit or system and component parts. Identify function, normal operating characteristics and limiting conditions. Include legible performance curves, with engineering data and tests and complete nomenclature and commercial number of replaceable parts.

2. Panelboard circuit directories including electrical service characteristics, controls and communications and color-coded wiring diagrams as installed.

3. Operating procedures: include start-up, break-in and routine normal operating instructions and sequences; regulation, control, stopping, shut-down and emergency instructions; and summer, winter and any special operating instructions.

4. Maintenance Requirements
   a. Procedures and guides for trouble-shooting; disassembly, repair, and reassembly instructions
   b. Alignment, adjusting, balancing and checking instructions
   c. Servicing and lubrication schedule and list of recommended lubricants
   d. Manufacturer's printed operation and maintenance instructions
   e. Sequence of operation by instrumentation and controls manufacturer
   f. Original manufacturer's parts list, illustrations, assembly drawings and diagrams required for maintenance

5. Control diagrams by controls manufacturer as installed (as-built)

6. Contractor's coordination drawings, with color coded piping diagrams, as installed (as-built)

7. Charts of valve tag numbers, with location and function of each valve, keyed to flow and control diagrams. Include equipment and instrument tag numbers on diagrams.

8. List of original manufacturer's spare parts and recommended quantities to be maintained in storage

9. Test and balancing reports, as required

10. Additional Requirements as specified in individual product specification

11. Design data for systems engineered by the Contractor or its Suppliers

F. Manual for Materials and Finishes - In addition to the requirements listed above, for each material or finish, provide the following:

1. Building Products, Applied Materials and Finishes: Include product data, with catalog number, size, composition and color and texture designations. Provide information for re-ordering custom manufactured products.

2. Instructions for Care and Maintenance: Include manufacturer's recommendations for cleaning agents and methods, precautions against detrimental agents and methods and recommended schedule for cleaning and maintenance.

3. Moisture Protection and Weather Exposed Products: Include product data listing, applicable reference standards, chemical composition, and details of installation. Provide recommendations for inspections, maintenance and repair.

4. Additional Requirements: As specified in individual product specifications.

G. Electronic Transmission of O&M Manuals

1. Unless otherwise approved by the Engineer, O&M manuals may not be transmitted by electronic means other than by CD-ROM or USB flash drive. Electronic O&M manuals shall meet the following conditions:
   a. The above-specified transmittal form is included.
   b. All other requirements specified above have been met, including, but not limited to, coordination by the Contractor, review and approval by the Contactor.
   c. The submittal contains no pages or sheets large than 11 x 17 inches.
   d. With the exception of the transmittal sheet, the entire submittal is included in a single file.
   e. Files are Portable Document Format (PDF) – with the printing function enabled.
   f. The Vendor provided equipment, sub-system, or system manuals shall be in PDF format, compliant with the Adobe PDF Specification Version 1.7. The manual shall be Searchable Image. The Optical Character Recognition of the image shall be at a 95% confidence level. The manuals shall be linked and bookmarked as follows:
      1) Provide links from all Table of Contents, List of Tables, List of Figures, etc., entries to the actual occurrence in the body of the manual.
      2) Create bookmarks for all linked Table of Content entries.
   g. All drawings shall be in PDF format, compliant with the Adobe PDF Specification Version 1.7. The manual shall be PDF Searchable Image. The Optical Character Recognition of the image shall be at a 95% confidence level. The drawings shall be linked as follows:
      1) External links from the Drawing Index (if it exists) to each drawing.
      2) External links from references within drawings to other drawings.
   h. All scanned manufacturer's O&M manuals must be quality checked after scanning to ensure the page are not crooked and all information is legible.

2. When electronic copies are provided, transmit two hard copy (paper) originals to the Engineer with an electronic copy on CD-ROM.

3. The electronic copy of the O&M manual shall be identical in organization, format and content to the hard copies of the manual.

4. The electronic O&M Manual shall be bookmarked identically to the paper manual table of contents to allow quick access to information. Electronic submittals that require extensive scrolling will not be accepted. The document shall be indexed and searchable.

H. Quick Reference Sheets for Equipment

1. For each item of equipment furnished under Divisions 11, 15, and 16 provide the following:
   a. A minimum of one 8 ½ x 11-inch laminated quick reference sheet. Sheets shall be three hole punched and may be double sided.
   b. Each quick reference sheet shall include the following minimum information:

1) Safety Procedures:
   a) Brief descriptions of each piece of equipment and components;
   b) Starting and stopping procedures;
   c) Special operating instruction;
   d) Routine maintenance procedures;
   e) Calibration procedures;
   f) Pump curves;
   g) Trouble shooting procedures; and
   h) Name, address, and telephone numbers of local service representative.

c. Provide three copies of quick reference sheets for review by the Engineer.

d. After quick reference sheets have been approved, provide four copies of laminated quick reference sheets to the Engineer in one commercial coiled three-ring binder with durable and cleanable plastic cover.

1.04 SERVICES OF MANUFACTURERS' REPRESENTATIVE

A. A. All electrical, mechanical, and instrumentation & controls equipment furnished under various technical specifications Sections shall include the cost of a competent representative of the manufacturers of all equipment to supervise the installation, adjustment and testing of the equipment; and, to instruct the Owner's operating personnel on operation and maintenance. This supervision may be divided into two or more time periods to suit the Contractor’s schedule and/or the Owner’s personnel availability.

B. See the detailed specifications for additional requirements for furnishing the services of manufacturer's representatives.

C. The manufacturer’s representative shall certify that the installation of the equipment is satisfactory; that the unit has been satisfactorily tested; that the equipment is ready for operation; and, that the operating personnel have been suitably instructed in the operation, maintenance, care, and safe operation of the equipment. The Equipment Manufacturer’s Certificate of Installation, Testing, and Instruction attached to this Section shall be used for this certification.

D. For other materials furnished under other specification Sections, furnish the services of approved representative(s) of the manufacturer when, in the opinion of the Engineer, some evident product failure or malfunction makes such services necessary.

1.05 EQUIPMENT ATTRIBUTE INFORMATION

A. Equipment Attribute Worksheets as presented at the end of this Section shall be provided for all equipment meeting the asset definition as follows:

1. Asset Definition
   a. Maintenance is recommended
   b. Assets have a value greater than $1,000
   c. Assets are complete and usable, and perform a distinct function independently (i.e., they pump waste, remove solids, etc.)

B. This asset definition is intended to give a general indication of which equipment must be included in the Equipment Attribute Worksheets. The Engineer will provide the specific list of equipment that the Vendor must provide information for:

C. The information requirements are shown in detail in the table. The data requirements include nameplate data, manufacturer and supplier information, information specific to the type of equipment, and recommended preventative maintenance activities.

D. An electronic copy of the Equipment Attribute Worksheets must be delivered in Excel format and submitted to the Engineer on CD-ROM and submitted with the O&M manuals. It is not necessary to submit printed copies of the Equipment Attribute Worksheets.

PART 2 PRODUCTS (NOT USED)

PART 3 EXECUTION

3.01 SUBMITTAL SCHEDULE

A. Operation and maintenance manuals shall be delivered directly to the office of the Engineer, as follows:

1. Provide preliminary copies of each manual to the office of the Engineer, no later than 30 days following approval of the respective shop drawings.

2. Provide final copies of each completed manual prior to testing.

3. Provide a letter that grants the Engineer and Owner to the limited right to use and reproduce each manual (in it its entirety or any portion thereof) from the respective equipment manufacturer(s). Such limited right shall allow the Engineer and Owner to use each manual or and portion thereof for:
   a. The potential assembly of a comprehensive facility operation and maintenance manual for the sole benefit of the Owner; and,
   b. Supplemental training of the Owner's personnel and operators, over and above the required vendor's training, regarding operation of the facility as a system.

B. The Engineer will review Operation and Maintenance manuals submittals for operating equipment for conformance with the requirements of the applicable specification Section. The review will generally be based on the O&M Manual Review Checklist appended to this Section.

C. If during test and start-up of equipment, any changes were made to the equipment, provide two hard copies of as-built drawings or any other amendments for insertion, by the Contractor, in the previously transmitted final manuals. In addition, provide one revised electronic version including the as-built drawings and any other amendments. The manuals shall be completed, including updates, if any, within 30 days of start-up and testing of the facility.

3.02 VENDOR TRAINING/INSTRUCTIONS (TO OWNER'S PERSONNEL)

A. Before final initiation of operation, Contractor's vendors shall train/instruct Owner's designated personnel in the operation, adjustment, and maintenance of products, equipment and systems at times convenient to the Owner.

B. Unless specified otherwise under the respective equipment specification section, vendor training/instruction shall consist of eight hours of training for each type of equipment. Such training/instruction shall be scheduled and held at times to accommodate the work schedules of Owner's personnel, including splitting the required training/instruction time into separate

sessions and/or presented at reasonable times other than the Contractor's "normal working hours" or the Owner's normal day shift.

C. Use operation and maintenance manuals as basis for instruction. Train/instruct the Owner's personnel, in detail, based on the contents of manual explaining all aspects of operation and maintenance of the equipment. If the respective equipment is inter-related to the operation of other equipment, all interlock, constraints, and permissives shall be explained.

D. At least two weeks prior to the schedule for vendor training, a detailed lesson plan, representative of the material to be covered during instruction, shall be submitted to the Engineer for approval. Lesson plans shall consist of in-depth outlines of the training material, including a table of contents, resume of the instructor, materials to be covered, start-up procedures, maintenance requirements, safety considerations, and shut-down procedures.

E. Prepare and insert additional data in each Operation and Maintenance Manual when the need for such data becomes apparent during training/instruction.

F. Vendor's training/instruction will be considered acceptable based on the completed Owner's Acknowledgement of Manufacturer's Instruction as indicated on the Equipment Manufacturer's Certification of Installation, Testing, and Instruction appended to this Section.

G. Training Video

1. All equipment suppliers shall supply to the Engineer three copies of a training video specific to the equipment furnished for the project. The film shall be of a high quality, with both picture and sound.

2. The training video shall be organized so as to show and identify each element of the equipment; including a clear explanation of its function, troubleshooting criteria; disassembly and reassembly

3. Portions of the training video shall be recorded at the on-site O&M training sessions conducted by the equipment manufacturer’s representative.

4. The video shall be submitted to the Engineer for approval not less than 30 calendar days after the start-up of the equipment.

5. The video recording should be playable on VCD recorded discs using MPEG-1 video (MP3 audio) and thereby able to be replayed through Windows Media Player, QuickTime or RealPlayer on PCs and most DVD players. VCD stored on CD-ROMs have the capacity to hold up to 74/80 minutes on a 650MB/700MB CD respectively, of video with stereo quality sound. All video and audio should be of the highest quality. All CD-OMS shall bear a label identifying the Equipment(s) trained on, general Training topic (i.e., Maintenance, Operations, Storage, or O&M, etc.), the date of the video, trainer and his affiliation (i.e. John Doe, XYZ Company), and video file one of how many on the topic (Video 1 of 2) if the video exceeds the recording time of the CD.

3.03 VIDEOGRAPHY OF VENDOR TRAINING/INSTRUCTION

A. Audio/video (A/V) record (in DVD format) training/instructions as they are being provided to the Owner's personnel. Such recording shall include the entire training/instruction session(s) as

well as all questions and answers. A/V recording shall be performed by a professional organization experienced in the production of such recordings. Self-recording by the Contractor may be considered, provided that Contractor can demonstrate, in advance, proficient examples of such recordings.

B. To avoid audio problems, training/instruction shall be held in a location sufficiently removed from construction activity, insulated from the noise of construction activity, or during a time when construction activity is not occurring in the vicinity.

C. The audio portion of the A/V recording should be done with a microphone (wired or wireless) attached to the trainer/instructor to maximize the quality of speech.

D. Each A/V recording should have "chapters" to segregate the distinct portions of the training/instruction, or have visual cues at the start of a change in subject.

E. Two copies of the A/V recordings shall be submitted to the Engineer on DVD disk(s). The DVDs will become the property of the Owner.

END OF SECTION

© 2019 CDM Smith
All Rights Reserved

O&M Manual Review Checklist

Submittal No.: _____
Project No.: _____
Manufacturer: _____
Equipment Submitted: _____
Specification Section: _____
Date of Submittal:

	General Data	
1.	Are the area representative's name, address, e-mail address and telephone number included?	
2.	Is the nameplate data for each component included?	
3.	Are all associated components related to the specific equipment included?	
4.	Is non-pertinent data crossed out or deleted?	
5.	Are drawings neatly folded and/or inserted into packets?	
6.	Are all pages properly aligned and scanned legibly?	
7.	Is the .PDF document bookmarked according to the table of contents?	
	Operations and Maintenance Data	
8.	Is an overview description of the equipment and/or process included?	
9.	Does the description include the practical theory of operation?	
10.	Does each equipment component include specific details (design characteristics, operating parameters, control descriptions, and selector switch positions and functions)?	
11.	Are alarm and shutdown conditions specific to the equipment provided on this project clearly identified? Does it describe possible causes and recommended remedies?	
12.	Are step procedures for starting, stopping, and troubleshooting specific to the equipment provided included?	
13.	Is a list of operational parameters to monitor and record specific to the equipment provided included?	
14.	Is a proposed operating log sheet specific to the equipment provided included?	
15.	Is a spare parts inventory list included for each component?	
16.	Is a lubrication schedule for each component specific to the equipment provided included - or does it clearly state “No Lubrication Required"?	
17.	Is a maintenance schedule for each component specific to the equipment provided included?	
18..	Is a copy of the warranty information included?	

© 2019 CDM Smith
All Rights Reserved

Review Comments

Is the submittal fully approved (yes/no)? _____

If not, the following points of rejection must be addressed and require resubmittal by the Contractor:

Item No.

1. _____
2. _____
3. _____
4. _____
5. _____
6. _____
7. _____
8. _____
9. _____
10. _____
11. _____
12. _____
13. _____
14. _____
15. _____

Reviewed By: _____ Date: _____

Legend

1 = OK

2 = Not Adequate

3 = Not Included

Note: This submittal has been reviewed for compliance with the Contract Documents.

© 2019 CDM Smith
All Rights Reserved

SECTION 01731
ASSET MANAGEMENT DATA

PART 1 GENERAL

1.01 SCOPE OF WORK

A. This Section includes procedural requirements for compiling and submitting asset management data required to complete the project. In addition to the requirements specified herein, Contractor asset management data shall be as required in JEA Water and Wastewater Standards – Section 445.

1.02 RELATED REQUIREMENTS

A. Application for Payment is included in Section 01026.

B. Standard General Conditions of the Construction Contract are included in the Front End Documents provided by Owner.

1.03 ENTERPRISE ASSET MANAGEMENT DATA (EAM WORKSHEET)

A. Equipment Attribute Information:

1. Equipment Attribute Worksheets as presented at the end of this Specification shall be provided for all equipment meeting the asset definition as follows:
   a. Maintenance is recommended.
   b. Assets have a value greater than $1,000.00.
   c. Assets are complete and usable, and perform a distinct function independently.

2. This asset definition is intended to give a general indication of which equipment must be included in the Equipment Attribute Worksheets. The Engineer will provide the specific list of equipment that the Contractor must provide information for:
   a. The information requirements are shown in detail in the table at the end of this Specification. The data requirements include nameplate data, manufacturer and supplier information, information specific to the type of equipment, and recommended preventative maintenance activities.
   b. An electronic copy of the Equipment Attribute Worksheets must be delivered in Excel format and submitted to the Engineer on CD-ROM at closeout. It is not necessary to submit printed copies of the Equipment Attribute Worksheets.

1.04 SCHEDULE OF ASSET VALUES

A. **The asset table is included in this Section.** It includes the assets to be accounted for in the Schedule of Asset Values.

B. For each asset listed, provide a constructed cost which will include an allocation of construction activities including but not limited to, demolition, sitework, specialties, materials, labor, general conditions, and overhead and profit associated with the construction of the asset.

C. The combined value of the assets will equal the bid price for the project and will require adjustments as necessary due to change orders. The schedule of asset values will be updated on a monthly basis and will be included in the monthly pay request application for approval.

D. The Owner reserves the right to edit this list prior to the first pay request application and may add up to 10 percent more items than have been identified in the list.

PART 2 PRODUCTS (NOT USED)

PART 3 EXECUTION

3.01 SUBMITTAL SCHEDULE

A. The Engineer will review the EAM data and SCHEDULE OF ASSET VALUES data for conformance with the requirements listed on each worksheet.

B. The EAM worksheet and SCHEDULE OF ASSET VALUES worksheets will be updated on a monthly basis and submitted to the Engineer for review with the monthly payment application.

END OF SECTION
(*Schedule of Asset Values Follows*)

SCHEDULE OF ASSET VALUES

ACTIVITY (NEW, RETIRE, REHAB)	FIXED ASSET TYPE	FIXED ASSET DESCRIPTION
PIPING		
New Asset	Valve, greater than or equal to 4"	4” Plug Valves
New Asset	Valve, greater than or equal to 4"	14” Plug Valves
New Asset	Valve, greater than or equal to 4"	14” Check Valves (Rubber Flapper Type)
New Asset	Valve, greater than or equal to 4"	16” Plug Valves
New Asset	Valve, greater than or equal to 4"	16” Check Valves (Rubber Flapper Type)
New Asset	Valve, greater than or equal to 4"	18” Plug Valves
New Asset	Valve, greater than or equal to 4"	18” Check Valves (Rubber Flapper Type)
New Asset	Valve, greater than or equal to 4"	20” Plug Valves
New Asset	Valve, greater than or equal to 4"	24” Plug Valves
New Asset	Valve, greater than or equal to 4"	30” Plug Valves
New Asset	Valve, greater than or equal to 4"	36” Plug Valves
New Asset	Piping, greater than or equal to 4" in diameter and more than 10' in length between two or more retirement units, or to a termination (includes fittings)	4” Sanitary Piping
New Asset	Piping, greater than or equal to 4" in diameter and more than 10' in length between two or more retirement units, or to a termination (includes fittings)	14" 316 Stainless Steel Schedule 40 Piping
New Asset	Piping, greater than or equal to 4" in diameter and more than 10' in length between two or more retirement units, or to a termination (includes fittings)	14" Ductile Iron Piping
New Asset	Piping, greater than or equal to 4" in diameter and more than 10' in length between two or more retirement units, or to a termination (includes fittings)	16" 316 Stainless Steel Schedule 40 Piping

ACTIVITY (NEW, RETIRE, REHAB)	FIXED ASSET TYPE	FIXED ASSET DESCRIPTION
New Asset	Piping, greater than or equal to 4" in diameter and more than 10' in length between two or more retirement units, or to a termination (includes fittings)	16" Ductile Iron Piping
New Asset	Piping, greater than or equal to 4" in diameter and more than 10' in length between two or more retirement units, or to a termination (includes fittings)	16" PVC Piping with 16" Ductile Iron Fittings
New Asset	Piping, greater than or equal to 4" in diameter and more than 10' in length between two or more retirement units, or to a termination (includes fittings)	18" 316 Stainless Steel Schedule 40 Piping
New Asset	Piping, greater than or equal to 4" in diameter and more than 10' in length between two or more retirement units, or to a termination (includes fittings)	18" Ductile Iron Piping
New Asset	Piping, greater than or equal to 4" in diameter and more than 10' in length between two or more retirement units, or to a termination (includes fittings)	20" 316 Stainless Steel Schedule 40 Piping
New Asset	Piping, greater than or equal to 4" in diameter and more than 10' in length between two or more retirement units, or to a termination (includes fittings)	20" Ductile Iron Piping
New Asset	Piping, greater than or equal to 4" in diameter and more than 10' in length between two or more retirement units, or to a termination (includes fittings)	20" PVC Piping with 20" Ductile Iron Fittings
New Asset	Piping, greater than or equal to 4" in diameter and more than 10' in length between two or more retirement units, or to a termination (includes fittings)	24" 316 Stainless Steel Schedule 40 Piping
New Asset	Piping, greater than or equal to 4" in diameter and more than 10' in length between two or more retirement units, or to a termination (includes fittings)	24" Ductile Iron Piping
New Asset	Piping, greater than or equal to 4" in diameter and more than 10' in length between two or more retirement units, or to a termination (includes fittings)	30" PVC Piping with 30" Ductile Iron Fittings
New Asset	Piping, greater than or equal to 4" in diameter and more than 10' in length between two or more retirement units, or to a termination (includes fittings)	36" PVC Piping with 36" Ductile Iron Fittings

ACTIVITY (NEW, RETIRE, REHAB)	FIXED ASSET TYPE	FIXED ASSET DESCRIPTION
ELECTRICAL		
New Asset	Electrical, Motor Control Center/Panel (includes as minor items, lighting arrestor, current transformer/main leads, circuit breakers less than 400 amps, soft starts)	Motor Control Center 1, 2, and 3
New Asset	Electrical, Circuit Breakers greater than or equal to 400 amps	Circuit Breakers
New Asset	Electrical, Switch Gear	Switch gear
New Asset	Electrical, Distribution Switches	Distribution switches
New Asset	Electrical, Motor Starters greater than or equal to 30 Hp	Pump Motor Starters
New Asset	Electrical, VFDs greater than or equal to 30 Hp	Booster Pump VFDs, 140 hp
New Asset	Electrical, VFDs greater than or equal to 30 Hp	Jockey Pump VFDs, 35 hp
New Asset	Electrical, Standby Generator	800 KW Standby Generator
New Asset	Electrical, Standby Generator Silencer	Standby Generator Silencer
New Asset	Electrical, Standby Generator Enclosure	Standby Generator Enclosure
New Asset	Electrical, Standby Generator Piping	Standby Generator Piping
New Asset	Electrical, Standby Generator Automatic Transfer Switch	Standby Generator Automatic Transfer Switch
New Asset	Electrical, Diesel Fuel Storage Tank	4000-gal fuel storage tank
New Asset	Electrical, Service Pole	JEA Service Pole
INSTRUMENTATION		
New Asset	Instrumentation, Pressure Transmitters with displays.	Pressure Transmitters, Suction and Discharge
New Asset	Instrumentation, Flow Meters	Magnetic Flow Meter
New Asset	Instrumentation, Check valve position switches	14-inch Check valve position switches
New Asset	Instrumentation, Check valve position switches	16-inch Check valve position switches
New Asset	Instrumentation, Check valve position switches	18-inch Check valve position switches

ACTIVITY (NEW, RETIRE, REHAB)	FIXED ASSET TYPE	FIXED ASSET DESCRIPTION
PUMPS		
Rehabilitated Asset	Pump, greater than 7.5 Hp, Pump	475 Hp Primary Standby Diesel Pump 1
Rehabilitated Asset	Pump, greater than 7.5 Hp, Pump	475 Hp Primary Standby Diesel Pump 2
New Asset	Pump, greater than 7.5 Hp, Pump	140 Hp Primary Booster pump 1
New Asset	Pump, greater than 7.5 Hp, Pump	140 Hp Primary Booster pump 2
New Asset	Pump, greater than 7.5 Hp, Pump	140 Hp Primary Booster pump 3
New Asset	Pump, greater than 7.5 Hp, Pump	140 Hp Primary Booster pump 4
New Asset	Pump, greater than 7.5 Hp, Pump	140 Hp Primary Booster pump 5
New Asset	Pump, greater than 7.5 Hp, Pump	140 Hp Primary Booster pump 6
New Asset	Pump, greater than 7.5 Hp, Pump	35 Hp Jockey Booster pump 1
New Asset	Pump, greater than 7.5 Hp, Pump	35 Hp Jockey Booster pump 2
SCADA		
New Asset	SCADA, Communication Module	Communication Module
New Asset	SCADA, Radio	Radio
New Asset	SCADA, Antenna Tower	Antenna Tower
BUILDING		
New Asset	Building	Electrical Building
New Asset	Roof (building)	Electrical Building Roof
New Asset	Electrical Building Exterior Door	Electrical Building Exterior Door
New Asset	Lighting System (fixtures, conduit, cable, panels installed in or on building)	Electrical Building and Site Lighting System
HVAC		
New Asset	HVAC Controls	Electrical Building HVAC Controls
New Asset	HVAC Condenser/Compressor	Electrical Building Condenser/Compressor
New Asset	HVAC Supply Air Diffuser	Electrical Building 12" SAD, 500 cfm
New Asset	HVAC Exhaust Fan	Electrical Building 5,730 cfm Wall-mounted exhaust fan
New Asset	HVAC Ductwork	Electrical Building Ductwork
SECURITY		

ACTIVITY (NEW, RETIRE, REHAB)	FIXED ASSET TYPE	FIXED ASSET DESCRIPTION
New Asset	Fencing, 8' Security	Site Security Fencing at Bradley Road PS
New Asset	Fencing, Gate/Entrance Manual	Bradley Road PS Single Sliding Vehicle Gate

THIS PAGE INTENTIONALLY LEFT BLANK

© 2019 CDM Smith
All Rights Reserved

SECTION 01740
WARRANTIES AND BONDS

PART 1 GENERAL

1.01 SCOPE OF WORK

A. This Section specifies general administrative and procedural requirements for warranties and bonds required by the Contract Documents, including manufacturer's standard warranties on products and special warranties.

1.02 RELATED WORK

A. Refer to Conditions of Contract for the general requirements relating to warranties and bonds.

B. General closeout requirements are included in Section 01700 Project Closeout.

C. Specific requirements for warranties for the work and products and installations that are specified to be warranted are included in the individual Sections.

1.03 SUBMITTALS

A. The Contractor shall submit written warranties to the Owner via the Engineer 15 days prior to Substantial Completion. If the Certificate of Substantial Completion designates a commencement date for warranties other than the date of Substantial Completion for the work, or a designated portion of the work, submit written warranties upon request of the Owner.

B. When a designated portion of the work is completed and occupied or used by the Owner, by separate agreement with the Equipment supplier or Contractor (as applicable) during the construction period, submit properly executed warranties to the Owner via the Engineer within 15 days of completion of that designated portion of the Work.

C. When special warranty is required to be executed by the Contractor or Equipment Supplier/Manufacturer, prepare a written document that contains appropriate terms and identification, ready for execution by the required parties. Submit a draft to the Owner via the Engineer for approval prior to final execution.

D. Refer to individual Sections for specific content requirements, and particular requirements for submittal of special warranties.

E. At Final Completion compile two copies of each required warranty and bond properly executed by the Contractor, or by the Equipment Supplier, or by the Manufacturer. Organize the warranty documents into an orderly sequence based on the table of contents of the Project Manual.

F. Bind warranties and bonds in heavy-duty, commercial quality, durable 3-ring vinyl covered loose-leaf binders, thickness as necessary to accommodate contents and sized to receive 8-1/2-in by 11-in paper.

G. Table of Contents: Neatly typed, in the sequence of the Table of Contents of the Project Manual, with each item identified with the number and title of the Section in which specified and the name of the product or work item.

H. Provide heavy paper dividers with celluloid covered tabs for each separate warranty. Mark the tab to identify the product or installation. Provide a typed description of the product or installation, including the name of the product and the name, address and telephone number of the installer, supplier and manufacturer.

I. Identify each binder on the front and the spine with the typed or printed title "WARRANTIES AND BONDS", the project title or name and the name, address and telephone number of the Contractor.

J. When operating and maintenance manuals are required for warranted construction, provide additional copies of each required warranty, as necessary, for inclusion in each required manual.

1.04 WARRANTY REQUIREMENT

A. Related Damages and Losses: When correcting warranted work that has failed, remove and replace other work that has been damaged as a result of such failure or that must be removed and replaced to provide access for correction of warranted work.

B. Reinstatement of Warranty: When work covered by a warranty has failed and been corrected by replacement or rebuilding, reinstate the warranty by written endorsement. The reinstated warranty shall be equal to the original warranty with an equitable adjustment for depreciation.

C. Replacement Cost: Upon determination that work covered by a warranty has failed, replace or rebuild the work to an acceptable condition complying with requirements of Contract Documents. The Contractor is responsible for the cost of replacing or rebuilding defective work regardless of whether the Owner has benefited from use of the work through a portion of its anticipated useful service life.

D. Owner's Recourse: Written warranties made to the Owner are in addition to implied warranties, and shall not limit the duties, obligations, rights and remedies otherwise available under the law, nor shall warranty periods be interpreted as limitations on time in which the Owner can enforce such other duties, obligations, rights, or remedies.

E. Rejection of Warranties: The Owner reserves the right to reject warranties and to limit selections to products with warranties not in conflict with requirements of the contract Documents.

F. Disclaimers and Limitations: Manufacturer's disclaimers and limitations on product warranties do not relieve the Contractor of the warranty on the work that incorporates the products, nor does it relieve suppliers, manufacturers and subcontractors required to countersign special warranties with the Contractor.

1.05 MANUFACTURERS CERTIFICATIONS

A. Where required, the Contractor shall supply evidence, satisfactory to the Engineer, that the Contractor can obtain manufacturers' certifications as to the Contractor's installation of equipment.

1.06 DEFINITIONS

A. Standard Product Warranties are preprinted written warranties published by individual manufacturers for particular products and are specifically endorsed by the manufacturer to the Owner.

B. Special Warranties are written warranties required by or incorporated in the Contract Documents, either to extend time limits provided by standard warranties or to provide greater rights for the Owner.

PART 2 PRODUCTS (NOT USED)

PART 3 EXECUTION (NOT USED)

END OF SECTION

© 2019 CDM Smith
All Rights Reserved

THIS PAGE INTENTIONALLY LEFT BLANK

© 2019 CDM Smith
All Rights Reserved

SECTION 02050
DEMOLITION AND MODIFICATIONS

PART 1 GENERAL

1.01 SCOPE OF WORK

A. Furnish all labor, materials, equipment and incidentals required and demolish, modify, remove and dispose of work shown on the Drawings and as specified herein.

B. Included, but not limited to, are demolition, modifications and removal of existing materials, equipment or work necessary to install the new work as shown on the Drawings and as specified herein and to connect with existing work in approved manner.

C. Demolition, modifications and removals which may be specified under other Sections shall conform to requirements of this Section.

D. Demolition and modifications include:

1. Demolition of existing Bradley Road Pump Station structure and all associated equipment as shown in the Drawings.

2. Demolition of existing piping as shown in the Drawings.

1.02 RELATED WORK

A. Summary of Work is included in Section 01010.

B. Submittals are included in Section 01300.

C. Construction Schedule is included in Section 01310.

D. Site Preparation is included in Section 02100.

E. Excavation and Backfill is included in Section 02200, 02202 and 02221.

F. Erosion and Sediment Control is included in Section 02270.

1.03 SUBMITTALS

A. Submit, in accordance with Section 01300, six copies of proposed methods and operations of demolition of the structures and modifications prior to the start of work. Include in the schedule the coordination of shutoff, capping and continuation of utility service as required.

B. Furnish a detailed sequence of demolition and removal work to ensure the uninterrupted progress of the Owner's operations. Sequence shall be compatible with sequence of construction and shutdown coordination requirements as specified in Section 01014.

C. Before commencing demolition work, all modifications necessary to bypass the affected structure shall be completed. Actual work shall not begin until the Engineer has inspected and approved the modifications and authorized commencement of the demolition work in writing.

1.04 JOB CONDITIONS

A. Protection

1. Execute the demolition and removal work to prevent damage or injury to structures, occupants thereof and adjacent features which might result from falling debris or other causes, and so as not to interfere with the use, and free and safe passage to and from adjacent structures.

2. Closing or obstructing of roadways, sidewalks and passageways adjacent to the work by the placement or storage of materials will not be permitted and all operations shall be conducted with a minimum interference to traffic on these ways.

3. Erect and maintain barriers, lights, sidewalk sheds and other required protective devices.

B. Scheduling

1. Carry out operations so as to avoid interference with operations and work in the existing facilities.

C. Notification

1. At least 48 hours prior to commencement of a demolition or removal, notify the Engineer in writing of proposed schedule therefor. Owner shall inspect the existing equipment and to identify and mark those items which are to remain the property of the Owner. No removals shall be started without the permission of the Engineer.

D. Conditions of Structures

1. The Owner and the Engineer assume no responsibility for the actual condition of the structures to be demolished or modified.

2. Conditions existing at the time of inspection for bidding purposes will be maintained by the Owner insofar as practicable. However, variations within a structure may occur prior to the start of demolition work.

E. Repairs to Damage

1. Promptly repair damage caused to adjacent facilities by demolition operation when directed by Engineer and at no additional cost to the Owner. Repairs shall be made to a condition at least equal to that which existed prior to construction.

F. Traffic Access

1. Conduct demolition and modification operations and the removal of equipment and debris to ensure minimum interference with roads, streets, walks both onsite and offsite and to ensure minimum interference with occupied or used facilities at the Bradley Road Pump Station.

2. Special attention is directed towards maintaining safe and convenient access to the existing facilities by plant personnel and plant associated vehicles.

3. Do not close or obstruct streets, walks or other occupied or used facilities without permission from the Engineer. Furnish alternate routes around closed or obstructed traffic in access ways.

1.05 RULES AND REGULATIONS

A. The Building Code of the State of Florida shall control the demolition, modification or alteration of the existing buildings or structures.

B. No building or structure, or any part thereof, shall be demolished until an application has been filed with the Building Inspector and a permit issued. The fee for this permit shall be the Contractor's responsibility.

1.06 DISPOSAL OF MATERIAL

A. Salvageable material and equipment listed hereinafter shall become the property of the Owner. Dismantle all such items to a size that can be readily handled and deliver them to a designated storage area.

B. The following materials and items of equipment shall remain the property of the Owner and stored where directed on the site. Any such material damaged due to improper handling will not be accepted and the replacement value of the material deducted from the payment to the Contractor.

1. All mechanical equipment (pumps, blowers, meters, controllers, etc).

2. All valves greater than 8-in diameter.

C. All other material and items of equipment shall become the Contractor's property and must be removed from the site.

D. The storage or sale of removed items on the site will not be allowed.

PART 2 PRODUCTS (NOT USED)

PART 3 EXECUTION

3.01 GENERAL

A. All materials and equipment removed from existing work shall become the property of the Contractor, except for those which the Owner has identified and marked for his/her use. All materials and equipment marked by the Owner to remain shall be carefully removed, so as not to be damaged, cleaned and stored on or adjacent to the site in a protected place specified by the Engineer or loaded onto trucks provided by the Owner.

B. Dispose of all demolition materials, equipment, debris and all other items not marked by the Owner to remain, off the site and in conformance with all existing applicable laws and regulations.

C. Pollution Controls

1. Use water sprinkling, temporary enclosures and other suitable methods to limit the amount of dust and dirt rising and scattering in the air to the lowest practical level. Comply with governing regulations pertaining to environmental protection.
   a. Do not use water when it may create hazardous or objectionable conditions such as ice, flooding and pollution.
   b. Clean adjacent structures, facilities, and improvements of dust, dirt and debris caused by demolition operations. Return adjacent areas to conditions existing prior to the start of the work.

D. Building Demolition

1. Unless otherwise approved by Engineer, proceed with demolition from the top of the structure to the ground. Complete demolition work above each floor or tier before disturbing supporting members of lower levels.

2. Demolish concrete and masonry in small sections.

3. Remove structural framing members and lower to ground by means of hoists, derricks, or other suitable methods.

4. Break up and remove foundations and slabs-on-grade, unless otherwise shown to remain.

5. Locate demolition equipment throughout the structure and remove material so as to not impose excessive loads to supporting walls, floors or framing.

3.02 STRUCTURAL REMOVALS

A. Remove structures to the lines and grades shown unless otherwise directed by the Engineer. Where no limits are shown, the limits shall be 4-in outside the item to be installed. The removal of masonry beyond these limits shall be at the Contractor's expense and these excess removals shall be reconstructed to the satisfaction of the Engineer with no additional compensation to the Contractor.

B. All concrete, brick, tile, concrete block, roofing materials, reinforcement, structural or miscellaneous metals, plaster, wire mesh and other items contained in or upon the structure shall be removed and taken from the site, unless otherwise approved by the Engineer. Demolished items shall not be used in backfill adjacent to structures or in pipeline trenches.

C. After removal of parts or all of masonry walls, slabs and like work which tie into new work or existing work, the point of junction shall be neatly repaired so as to leave only finished edges and surface exposed.

3.03 MECHANICAL REMOVALS

A. Mechanical removals shall consist of dismantling and removing of existing septic systems, piping, pumps, motors, equipment and other appurtenances as specified, shown, or required for the completion of the work. It shall include cutting, capping, and plugging as required, except that the cutting of existing piping for the purpose of making connections thereto will be included under Division 15.

B. Existing process, water, chemical, gas, fuel oil and other piping not required for the new work shall be removed where shown or where it will interfere with new work. Piping not indicated to be removed or which does not interfere with new work shall be removed to the nearest solid support, capped and left in place. Chemical and fuel lines and tanks shall be purged and made safe prior to removal or capping. Where piping that is to be removed passes through existing walls, it shall be cut off and properly capped on each side of the wall.

C. When underground piping is to be altered or removed, the remaining piping shall be properly capped. Abandoned underground piping may be left in place unless it interferes with new work or is shown or specified to be removed.

D. Waste and vent piping shall be removed to points shown. Pipe shall be plugged with cleanouts and plugs. Where vent stacks pass through an existing roof that is to remain, they shall be removed and the hole in the roof properly patched and made watertight.

E. Any changes to potable water piping and other plumbing and heating system work shall be made in conformance with all applicable codes and under the same requirements as other underground piping. All portions of the potable water system that have been altered or opened shall be pressure tested and disinfected in accordance with Section 01445 and local codes. Other plumbing piping and heating piping shall be pressure tested only.

3.04 ELECTRICAL REMOVALS

A. Electrical removals shall consist of the removal of existing transformers, distribution switchboards, control panels, motors, conduits and wires, poles and overhead wiring, panelboards, lighting fixtures and miscellaneous electrical equipment all as shown on the Drawings, specified herein, or required to perform the work.

B. All existing electrical equipment and fixtures to be removed shall be removed with such care as may be required to prevent unnecessary damage, to keep existing systems in operation and to maintain the integrity of the grounding systems.

C. Conduits and wires shall be abandoned or removed where shown. All wires in abandoned conduits shall be removed, salvaged and stored. Abandoned conduits concealed in floor or ceiling slabs or in walls, shall be cut flush with the slab or wall at the point of entrance. The conduits shall be suitable plugged and the area repaired in a flush, smooth and approved manner. Exposed conduits and their supports shall be disassembled and removed from the site. Repair all areas of work to prevent rust spots on exposed surfaces.

D. Where shown or otherwise required, wiring in the underground duct system shall be removed. All such wiring shall be salvaged and stored as specified. Verify the function of all wiring before disconnection and removing it. Ducts which are not to be reused shall be plugged where they enter buildings and made watertight.

E. Where shown, direct-burial cable shall be abandoned. Such cable shall be disconnected at both ends of the run. Where it enters a building or structure the cable shall be cut back to the point of entrance. All opening in buildings for entrance of abandoned direct-burial cable shall be patched and made watertight.

F. Poles and overhead wiring shall be abandoned as shown and specified. Existing substation and poles owned by the power company will be removed by the power company. Poles not owned

by the power company shall be completely removed from the site. The overhead wires shall be salvaged and stored. Perform this work after the proposed service has been completed and energized, and in accordance with the approved schedule.

G. Lighting fixtures shall be removed or relocated as shown. Fixtures not relocated shall be removed from the site. Relocated fixtures shall be carefully removed from their present location and rehung where shown.

H. Wall switches, receptacles, starters and other miscellaneous electrical equipment, shall be removed and disposed of off the site as required. Care shall be taken in removing all equipment so as to minimize damage to architectural and structural members. Any damage incurred shall be repaired.

3.05 CLEAN-UP

A. Remove from the site all debris resulting from the demolition operations as it accumulates. Upon completion of the work, all materials, equipment, waste and debris of every sort shall be removed and premises shall be left, clean, neat and orderly.

END OF SECTION

© 2019 CDM Smith
All Rights Reserved

SECTION 02100
SITE PREPARATION

PART 1 GENERAL

1.01 SITE PREPARATION, CLEAN UP, AND RESTORATION

A. As specified in the JEA Water and Wastewater Standards (January 2019 or latest), Site Preparation, Clean Up and Restoration – Section 406.

END OF SECTION

THIS PAGE INTENTIONALLY LEFT BLANK

© 2019 CDM Smith
All Rights Reserved

SECTION 02140
DEWATERING AND DRAINAGE

PART 1 GENERAL

1.01 RELATED WORK

A. Submittals are included in Section 01300.

B. Site preparation is included in JEA's Water and Wastewater Manual, Section 406 – Site Preparation, Cleanup and Restoration, and Section 02100.

C. Excavation and Earthwork are included in JEA's Water and Wastewater Standards Manual, Section 408 – Excavation and Earthwork, and Section 02200.

D. Trenching, Backfilling and Compaction is included in JEA's Water and Wastewater Standards Manual, Section 408- Excavation and Earthwork, and Section 02221.

E. Granular Materials in included in Section 02730.

F. Erosion and sedimentation control are included in Section 02270.

G. Seeding is included in JEA's Water and Wastewater Manual, Section 441 – Grassing, and Section 02932.

H. Paving is included in JEA's Water and Wastewater Manual, Section 490 – Paving, and Section 02513 and Section 02740.

1.02 SCOPE OF WORK

A. The Contractor shall design, furnish, install, operate, monitor, maintain and remove a temporary dewatering system as required and lower and control water levels at least 2-feet below subgrades of excavations and to permit construction to proceed in-the-dry.

B. The Contractor shall furnish, maintain and remove temporary surface water control measures adequate to drain and remove surface water entering excavations.

C. The Contractor shall retain the services of a professional engineer registered in the State of Florida to prepare dewatering and drainage system designs and submittals described herein.

D. Work shall include the design, equipment, materials, installation, protection, and monitoring of geotechnical instrumentation required to monitor the performance of the dewatering and drainage system as required herein.

E. The Contractor shall collect and properly dispose of all discharge water from the dewatering and drainage systems in accordance with all Federal, State and local agency requirements.

F. The Contractor shall obtain and pay for all permits required for temporary dewatering and drainage systems. Original permits shall be prominently displayed on the site prior to constructing dewatering and drainage systems.

G. The Contractor shall repair damage caused by dewatering and drainage system operations.

H. The Contractor shall perform all work in accordance with current applicable regulations and codes of all Federal, State and local agencies.

1.03 SUBMITTALS

A. The Contractor shall submit, in accordance with Section 01300, detailed plans of the proposed dewatering methods. Dewatering and drainage system designs shall be prepared by a Professional Engineer licensed in the State of Florida, and retained by the Contractor, and having a minimum of five (5) years of professional experience in the design and construction of dewatering and drainage systems.

B. The plan shall include a description of the proposed dewatering system and include the proposed installation methods to be used for dewatering and drainage system elements and for observation wells. The plan shall include equipment, drilling methods, hole sizes, filter sand placement techniques, sealing materials, development techniques, the number and location of dewatering points and observations wells, etc. Include the dewatering system design calculations in the plan.

C. Submittal will be for information only. The Contractor shall remain responsible for adequacy and safety of construction means, methods and techniques.

D. The Contractor shall coordinate dewatering and drainage submittals with the excavation and support of excavation submittals. The submittal shall show the areas and depths of excavation to be dewatered. Sheet piles may be used for the advantage for reducing groundwater flow into the excavation if they can be embedded in confining or semi-confining layer(s). The plan shall also include detailed plans for settlement monitoring of existing structures within 150 feet of dewatering activities before and during construction, and provisions to address settlement of existing structures, should it occur, resulting from dewatering activities.

E. The Contractor shall not proceed with any excavation or dewatering activities until the dewatering submittals have been provided and approved by the Engineer and permits have been obtained.

1.04 DESIGN AND PERFORMANCE RESPONSIBILITY

A. The Contractor is responsible for the proper design and implementation of methods for controlling surface water and groundwater.

B. The primary purpose of the groundwater control system is to preserve the natural undisturbed condition of the subgrade soils in the areas of the proposed excavations. Prior to excavation, the Contractor shall lower the groundwater to at least 2-ft below the lowest excavation subgrade elevation. Additional groundwater lowering may be necessary beyond the 2-ft requirement, depending on construction methods and equipment used and the prevailing groundwater and soil conditions. The Contractor is responsible for lowering the groundwater as necessary to complete construction in accordance with the plans and specifications at no additional cost to the Owner.

C. The Contractor shall be responsible for damage to properties, buildings or structures, sewers and other utility installations, pavements and work that may result from dewatering of surface water control operations.

D. Design review and field monitoring activities by the Owner or of the Engineer shall not relieve the Contractor of his/her responsibilities for the work.

1.05 DEFINITIONS

A. Where the phrase "in-the-dry" is used in this Section, it shall be defined as an excavation subgrade where the groundwater level has been lowered to at least 2-ft below the lowest level of the excavation, is stable with no ponded water, mud, or muck, is able to support construction equipment without rutting or disturbance and is suitable for the placement and compaction of fill material, pipe or concrete foundations.

PART 2 PRODUCTS

2.01 MATERIALS

A. Pipe for observation wells, if required, shall consist of minimum 2-in I.D., Schedule 40 PVC pipe and machine slotted PVC wellpoints, maximum slot size 0.0.010-in.

B. The Contractor shall provide piping, pumping equipment and all other materials required to provide control of surface water and groundwater in excavation, and equipment provided shall be suitable for the intended purpose.

C. The Contractor shall maintain at all sites standby pumping systems and a source of standby power.

PART 3 EXECUTION

3.01 GENERAL

A. Remove and control water during periods when necessary to properly accomplish Work.

3.02 SURFACE WATER CONTROL

A Remove surface runoff controls when no longer needed.

3.03 DEWATERING SYSTEMS

A. Provide, operate, and maintain dewatering systems of sufficient size and capacity to permit excavation and subsequent construction in dry and to lower and maintain groundwater level a minimum of 2 feet below the lowest point of excavation. Continuously maintain excavations free of water, regardless of source, until backfilled to final grade.

B. For excavations related to pipe installations, lift station, sewer, etc., dewatering systems shall include wells or well points, and other equipment and appurtenances installed outside limits of excavations and sufficiently below lowest point of excavation, or to maintain specified groundwater elevation.

C. Design and Operate Dewatering Systems:

1. To prevent loss of ground as water is removed.

2. To avoid inducing settlement or damage to existing facilities, completed work, or adjacent property.

3. To relieve artesian pressures and resultant uplift of excavation bottom.

D. Provide sufficient redundancy in each system to keep excavation free of water in event of component failure.

E. Provide 100 percent emergency power backup with automatic startup and switchover in event of electrical power failure.

F. Provide supplemental ditches and sumps only as necessary to collect water from local seeps. Do not use ditches and sumps as primary means of dewatering.

3.04 DISPOSAL OF WATER

A. Contractor shall obtain discharge permit for water disposal from authorities having jurisdiction prior to commencement of work.

B. Treat water collected by dewatering operations, as required by regulatory agencies, prior to discharge.

C. Discharge water as required by discharge permit and in manner that will not cause erosion or flooding, or otherwise damage existing facilities, completed Work, or adjacent property.

D. Remove solids from treatment facilities and perform other maintenance of treatment facilities as necessary to maintain their efficiency.

3.05 PROTECTION OF PROPERTY

A. Make assessment of potential for dewatering induced settlement. Provide and operate devices or systems, including but not limited to reinjection wells, infiltration trenches and cutoff walls, necessary to prevent damage to existing facilities, completed Work, and adjacent property.

B. Securely support existing facilities, completed Work, and adjacent property vulnerable to settlement due to dewatering operations. Support shall include, but not be limited to, bracing, underpinning, or compaction grouting.

END OF SECTION

© 2019 CDM Smith
All Rights Reserved

SECTION 02200
EXCAVATION AND EARTHWORK

PART 1 GENERAL

1.01 SITE EXCAVATION AND EARTHWORK

A. As specified in the JEA Water and Wastewater Standards (January 2019 or latest), Excavation and Earthwork – Section 408.

END OF SECTION

THIS PAGE INTENTIONALLY LEFT BLANK

© 2019 CDM Smith
All Rights Reserved

SECTION 02202
SUBGRADE PREPARATION

PART 1 GENERAL

1.01 REFERENCES

A. The following is a list of standards which may be referenced in this section:

1. ASTM International (ASTM):
   a. D698, Standard Test Methods for Laboratory Compaction Characteristics of Soil Using Standard Effort (12,400 ft-lb/ft3 (600 kN-m/m3)).
   b. D1557, Test Method for Laboratory Compaction Characteristics of Soil Using Modified Effort (56,000 ft-lbf/ft3 (2,700 kN-m/m3)).
   c. JEA Water and Wastewater Standards (January 2015 or latest), Excavation and Earthwork – Section 408, and supplemented herein

1.02 DEFINITIONS

A. Prepared Ground Surface: Ground surface after completion of clearing and grubbing, scalping of sod, stripping of topsoil, excavation to grade, and scarification and compaction of subgrade.

B. Subgrade: Layer of existing soil after completion of clearing, grubbing, scalping of topsoil prior to placement of fill, roadway structure or base for floor slab.

C. Proof-Rolling: Testing of subgrade by compactive effort to identify areas that will not support the future loading without excessive settlement.

1.03 SEQUENCING AND SCHEDULING

A. Complete applicable Work specified in Sections 02050, Demolition; 02100, Site Preparation; and 02200, Excavation and Earthwork, prior to subgrade preparation.

1.04 QUALITY ASSURANCE

A. Notify Engineer at least 48 hours in advance when subgrade is ready for compaction or proof-rolling or whenever compaction or proof-rolling is resumed after a period of extended inactivity.

PART 2 PRODUCTS (NOT USED)

PART 3 EXECUTION

3.01 GENERAL

A. Keep subgrade free of water, debris, and foreign matter during compaction or proof-rolling.

B. Bring subgrade to proper grade and cross-section and uniformly compact surface.

C. Do not use sections of prepared ground surface as haul roads. Protect prepared subgrade from traffic. A temporary construction roadway shall be constructed as shown on the Project Drawings.

D. Maintain prepared ground surface in finished condition until next course is placed.

E. Once final lift of subgrade is compacted; no further trenching shall be allowed for utilities or other purposes.

F. Bearing Value Requirement: The completed subgrade shall be constructed to obtain a minimum Limerock Bearing Ratio (LBR) shown in the Drawings and Specifications. The Contractor shall obtain and submit test results from an approved independent testing laboratory showing results.

3.02 COMPACTION

A. Under Earthfill: Minimum of three passes with a vibratory roller having a dynamic force of 10 tons. Compact upper 12 inches to a minimum of 95 percent compaction as determined in accordance with ASTM D1557.

B. Under Pavement Structure, Floor Slabs On Grade, or Granular Fill Under Structures: Proof roll the subgrade with at least 15 overlapping passes using a vibratory roller having a minimum dynamic force of 10 tons. After proof rolling, compact the upper 12 inches to minimum 98 percent of the Modified Proctor maximum dry density (ASTM D1557). Densities should be uniformly obtained within each lift of structural fill or backfill.

3.03 MOISTURE CONDITIONING

A. The Contractor shall be responsible to moisture condition subgrade as necessary.

3.04 TESTING

A. The Contractor shall retain an independent soil testing company to determine in-place density and moisture conditions. Testing results shall be provided to the Owner and Engineer within 24 hours of test.

B. One test per every 2,000 square feet on every lift of subgrade; or one density test per lift, whichever requires more tests.

C. Per JEA Standard Specifications, a minimum of one test per 1,000 lineal feet of roadway center line for each type of soil of completed subgrade.

D. Maintenance of completed subgrade shall be in accordance with JEA Standard Specifications. At a minimum, the Contractor shall maintain it free from ruts, depressions and any damage resulting from adverse weather conditions or from the hauling or handling of materials, equipment, tools, etc. It shall be the Contractor's responsibility to maintain the required density until the subsequent base or pavement is in-place.

3.05 CORRECTION

A. Soft or Loose Subgrade:

1. Moisture condition and recompact; or,

2. Over excavate as specified in Section 02200, Excavation and Earthwork, and replace with suitable material from the excavation or from offsite, as specified in Section 02201, Fill and Backfill.

B. Unsuitable Material as defined in JEA Standard Specifications, Section 408: Over excavate as specified in Section 02200, Excavation and Earthwork, and replace with suitable material from the excavation, as specified in Section 02201, Fill and Backfill and recompact to acceptable compaction standards.

END OF SECTION

THIS PAGE INTENTIONALLY LEFT BLANK

© 2019 CDM Smith
All Rights Reserved

SECTION 02210
SITE GRADING

PART 1 GENERAL

1.01 THE REQUIREMENT

A. The CONTRACTOR shall perform grading Work within the limits, elevations and grades indicated on the Drawings and as specified herein.

1.02 QUALITY CONTROL

A. The site shall be graded to the required elevations. Spot elevations are shown on the Drawings and the finished surfaces shall be uniformly sloped between these locations.

B. Suitable excavated material shall be used in the formation of embankments as shown on the Drawings. The CONTRACTOR shall provide all additional fill material required to complete the embankments.

PART 2 PRODUCTS

2.01 FILL

A. Suitable fill material shall be noncohesive, nonplastic, granular mixture of local sand and limerock, shall be free from vegetation, organic material or muck and shall contain not more than 8 percent material by weight which passes the No. 200 sieve. Broken concrete shall not be used in the fill. Fill material containing limerock shall have sufficient sand to fill the voids in the limerock, and no individual rocks or pieces of hard material that will not pass a 6-inch diameter ring shall be used in the fill; except that the upper 4 inches of all backfill or fills shall not contain any rock or hard material that will not pass a 3-inch diameter ring. All fill material shall be provided by the CONTRACTOR from any excess suitable on-site material or from off site sources, borrow areas or other sources for this material all be reviewed by the Engineer prior to use. The CONTRACTOR must determine the volume of material required for the site.

PART 3 EXECUTION

3.01 GRADING AND COMPACTION

A. Fill material shall be placed in lifts not to exceed 8-inches and compacted to a density of not less than 95 percent of maximum density at optimum moisture as determined by ASTM D 1557 (98 percent under structures. Fill material shall be within plus or minus 2 percentage points of optimum moisture content. The minimum density acceptable at any location within the pavement subgrade shall be as shown on the plans.

3.02 FINE GRADING

A. After structures, bases and pavements are completed and the yard piping trenches backfilled, the disturbed areas of the site shall be fine graded. All construction debris, regardless of size, shall be removed. The completed surface shall be shaped and sloped to drain away from the structures. The completed surface shall be within 0.1 foot of the elevations shown on the

Drawings, unless otherwise directed by the Engineer. Minor adjustments to line and grade may be required as the work progresses in order to satisfy field conditions.

END OF SECTION

© 2019 CDM Smith
All Rights Reserved

SECTION 02221
TRENCHING, BACKFILLING AND COMPACTION

PART 1 GENERAL

1.01 TRENCH EXCAVATION AND BACKFILL

A. As specified in the JEA Water and Wastewater Standards (January 2019 or latest), Excavation and Earthwork – Section 408.

END OF SECTION

© 2019 CDM Smith
All Rights Reserved

THIS PAGE INTENTIONALLY LEFT BLANK

© 2019 CDM Smith
All Rights Reserved

SECTION 02230
GRANULAR MATERIALS

PART 1 GENERAL

1.01 SCOPE OF WORK

A. Furnish all labor, materials, equipment and incidentals required and obtain materials for filling and backfilling, grading and miscellaneous site work, for the uses shown on the Drawings and as specified herein.

1.02 RELATED WORK

A. Site Preparation is included in Section 02100.

B. Dewatering and Drainage is included in Section 02140.

C. Earthwork is included in Section 02200.

D. Trenching, Backfilling and Compaction is included in Section 02221.

E. Sedimentation and Erosion Control is included in Section 02270.

F. Sodding and Seeding is included in Section 02932.

1.03 SUBMITTALS

A. Submit, in accordance with Section 01300, complete product data for materials specified in this Section.

1.04 REFERENCE STANDARDS

A. American Society for Testing and Materials (ASTM)

1. ASTM C33 - Standard Specification for Concrete Aggregates.

2. ASTM D698 - Test Method for Laboratory Compaction Characteristics of Soil Using Standard Effort (12,400 ft-lbf/ft^3)(600kN-m/m^3).

B. Where reference is made to one of the above standards, the revision in effect at the time of bid opening shall apply.

1.05 QUALITY ASSURANCE

A. Laboratory Testing

1. At least 7 days prior to the placement of any backfill or fill materials, deliver a representative sample of the proposed materials weighing at least 50 lbs to the soils testing laboratory in accordance with Section 02221.

2. Engage the soils testing laboratory to perform:

a. Grain size analyses of the samples to determine their suita-bility for use as backfill or fill material in conformance to the materials requirements specified herein.
b. The appropriate Proctor analyses to determine the maximum dry densities required for compaction testing as specified elsewhere in the Contract Documents.

3. Test results and determinations of suitability shall be delivered to the resident project representative no later than 3 days prior to the placement of backfill or fill materials.

PART 2 PRODUCTS

2.01 MATERIALS

A. Backfill and Fill materials shall be suitable excavated materials, natural or processed mineral soils obtained from off-site sources, or graded crushed stone or gravel. Backfill and Fill materials shall be free of all organic material, trash, [snow, ice, frozen soil,] or other objectionable materials which may be compressible or which cannot be properly compacted. Soft, wet, plastic soils which may be expansive, clay soils having a natural, in-place water content in excess of 30 percent, soils containing more than 5 percent (by weight) fibrous organic materials, and soils having a plasticity index greater than 30 shall be considered unsuitable for use as backfill and fill. Backfill and fill materials shall have a maximum of 1 percent expansion when testing is performed on a sample remolded to 95 percent of maximum dry density (per ASTM D698) at 2 percent below optimum moisture content under a 100 lbs/sq ft surcharge.

B. Structural Fill shall be gravel, sandy gravel, or gravelly sand. Material shall have a plasticity index of less than 15 and shall conform to the following gradation limits:

Sieve Size	Percent Finer By Weight
6-in	100
No. 4	20 to 70
No. 40	5 to 35
No. 200	0 to 7

C. Structural Fill shall be FDOT Select Material, Types I, II, or III.

D. Select Fill shall conform to the requirements of common fill except that the material shall not contain any materials larger than 2-in in largest dimension.

E. Common Fill shall not contain granite blocks, broken concrete, masonry rubble, asphalt pavement, or any material larger than 6-in in any dimension. Common Fill shall have a plasticity index of less than 15 and shall conform to the following gradation limits:

Sieve Size	Percent Finer By Weight
No. 40	75
No. 200	20

F. Crushed Stone shall be sound, durable stone, angular in shape, and free of any foreign material, structural defects and chemical decay. Crushed stone shall conform to the following gradation limits:

Sieve Size	Percent Finer By Weight
1-in	100
3/4-in	90
1/2-in	60
1/4-in	25

G. Pea Gravel shall be screened, uniformly rounded stone, free from sand, loam, clay, excess fines and other deleterious materials. Pea Gravel shall conform to the following gradation limits:

Sieve Size	Percent Finer By Weight
1/2-in	100
3/8-in	90
No. 4	30
No. 8	10
No. 16	5

H. Screened Gravel shall be hard, durable, rounded, or sub-angular particles of proper size and gradation, and shall be free from sand, loam, clay, excess fines, and other deleterious materials. Screened gravel shall be graded within the following limits:

Sieve Size	Percent Finer By Weight
5/8-in	100
1/2-in	40 to 100
3/8-in	15 to 45
No. 10	0 to 5

I. Sand for concrete, grout, and masonry shall conform to ASTM C33 for fine aggregate. General purpose sand shall be Select Common Fill.

J. Lean Concrete shall be ready-mix, cast-in-place concrete conforming to the requirements of Section 03300. Minimum compressive strength shall be 2,000 psi after 7 days and 2,500 psi after 28 days.

PART 3 EXECUTION (NOT USED)

END OF SECTION

THIS PAGE INTENTIONALLY LEFT BLANK

© 2019 CDM Smith
All Rights Reserved

SECTION 02251
TERMITE CONTROL

PART 1 GENERAL

1.01 SCOPE OF WORK

A. Work Included: Soil treatment below slabs-on-grade for subterranean insects.

1.02 QUALITY ASSURANCE

A. Applicator: Company specializing in soil treatment for termite control and Licensed as a professional Pest Control Contractor in the State of Florida.

B. Materials: Provide certification that toxicant is conform to specified requirements.

C. Conform to State of Florida requirements for application licensing and authority to use toxicant chemicals.

D. Conform to Florida Building Code Section 1816 – Termite Protection.

1.03 ENVIRONMENTAL HAZARDS

A. Do not apply directly to water. Drift and runoff from treated areas may be hazardous to aquatic organisms in adjacent aquatic sites. Do not contaminate water by cleaning of equipment or disposal of waste.

1.04 INSPECTION AND WARRANTY

A. Provide five-year warranty for material and installation. Cover against invasion or propagation of subterranean termites. Provide yearly inspections and warranty to replace any wood damage through subterranean infestation without cost to the Owner for a period of five years from date of acceptance by means of a five-year repair and replacement bond, which shall be signed by Applicator and Contractor.

PART 2 PRODUCTS

2.01 MATERIALS

A. Characteristics: Provide chemicals specially formulated to prevent long term termite infestation, unless forbidden by governing authority. Other solutions may be used if approved by governing authorities and the Engineer. Use only chemicals and concentrations which do not injure plants and grass.

B. Product shall meet the requirements for registration as a pesticide product as required by Chapter 487, Florida Statues, and the registered label shall contain directions for use on new construction.

PART 3 EXECUTION

3.01 GENERAL

A. Installer/Applicator must examine areas and conditions under which Termite Control is to be installed/applied, and notify Contractor in writing of conditions detrimental to proper/timely completion of the work.

B. Do not proceed with the work until unsatisfactory conditions have been corrected in a manner acceptable to Installer/Applicator.

C. Beginning of installation/application means acceptance of existing conditions.

3.02 EXTENT, SEQUENCE

A. Do not apply soil treatment solution until excavating, filling and grading operations are completed, except as otherwise required in construction operations.

B. Remove foreign matter which could decrease effectiveness of treatment on areas to be treated. Loosen, rake, and level soil to be treated, except previously compacted areas under slab and foundations. Toxicant's may be applied before placement of porous fill under slabs, if recommended by chemical manufacturer.

3.03 APPLICATION

A. Apply soil treatment solution at rates recommended by soil chemical manufacturer. Comply with chemical manufacturer's printed/written instructions and recommendations for this work where they are the same as or greater than what is specified here.

B. Allow not less than 12 hours for drying after application before beginning concrete placement or other construction activities.

C. Post signs in areas of application warning workers that soil poisoning has been applied. Remove signs when areas are covered by other construction.

D. Reapply soil treatment solution to areas disturbed by subsequent excavation or other construction activities following application.

E. Apply toxicant immediately prior to placement of vapor barrier under slab-on-grade or finish grading outside foundation walls. Do not apply soil poison when surface water is present.

F. Apply toxicant to soil at the following minimum rates, using metered applicator:

1. Under floor slabs-on-grade: One gallon per 10 square feet; if fill is washed gravel or other coarse material, apply at rate of 1 1/2 gallons per 10 square feet.

2. Both sides of foundation wall: Four gallons per 10 linear feet per foot of depth. Mix emulsion with the soil as it is being replaced in the trench.

3. Immediately below expansion joists, control joints: Four gallons per 10 linear feet.

G. Apply extra treatment to structure penetrations, pipe ducts, and other soil penetrations.

H. Apply as coarse spray to ensure uniform distribution.

I. Coordinate soil treatment at foundation perimeter with finish grading and landscaping work to avoid disturbance of treated soil. Retreat disturbed treated soil.

3.04 RETREATMENT

A. If inspection identifies the presence of termites, retreat soil and retest.

B. Use same toxicant as for original treatment.

END OF SECTION

THIS PAGE INTENTIONALLY LEFT BLANK

© 2019 CDM Smith
All Rights Reserved

SECTION 02276
TEMPORARY EROSION AND SEDIMENTATION CONTROL

PART 1 GENERAL

1.01 THE REQUIREMENT

A. The Contractor shall design, provide, maintain and remove temporary erosion and sedimentation controls as necessary.

B. Temporary erosion controls may include, but are not limited to, mulching, netting, and watering, on site surfaces and spoil and borrow are surfaces and providing interceptor ditches at ends of berms and at those locations which will provide that erosion during construction will be either eliminated or maintained within acceptable limits as established by Owner.

C. Temporary sedimentation controls include, but are not limited to, silt dams, traps, barriers and appurtenances at the foot of sloped surfaces which will provide that sedimentation pollution will be either eliminated or maintained within acceptable limits as established by Owner.

D. Contractor shall provide effective temporary erosion and sediment control measures during construction or until final controls become effective.

1.02 SUBMITTALS

A. Submit schedule for temporary erosion and sedimentation control.

PART 2 PRODUCTS

2.01 EROSION CONTROL

A. Seeding and mulching, fertilization and watering shall be in accordance with Section 570-1 through 570-3 of the FDOT Specifications.

B. Netting: Fabricated of material acceptable to Owner or Engineer.

2.02 SEDIMENTATION CONTROL

A. Synthetic Fiber Bales: Fabricated of material acceptable to Owner or Engineer.

B. Netting: Fabricated of material acceptable to Owner or Engineer.

C. Filter Stone: Crushed stone conforming to FDOT Specifications.

PART 3 EXECUTION

3.01 EROSION CONTROL

A. Seeding shall be in accordance with Section 570-4 through 570-5 of the FDOT Specifications. The Contractor shall insure that all seeded areas have sustained growth prior to acceptance.

B. Mulching shall be in accordance with Section 570-4.6 of the FDOT Specifications.

C. Minimum procedures for mulching and netting are:

1. Apply mulch loosely to a thickness of between 0.75 inches and 1.5 inches.

2. Apply netting over mulched areas on sloped surfaces.

3.02 SEDIMENTATION CONTROL

A. Install and maintain silt dams, traps and barriers as shown on the approved schedule. Filter stone which is lodged shall be replaced as required.

3.03 PERFORMANCE

A. Should any of the temporary erosion and sediment control measures employed by the Contractor fail to produce results which comply with the requirements of Owner, Federal, State, and local regulatory agencies, Contractor shall immediately take whatever steps are necessary to correct the deficiency at his own expense.

END OF SECTION

© 2019 CDM Smith
All Rights Reserved

SECTION 02500
SURFACE RESTORATION

PART 1 GENERAL

1.01 THE REQUIREMENT

A. Items specified in this Section include repairs to landscaped and grassed areas that may be damaged or disturbed by Contractor activities.

1.02 RELATED WORK SPECIFIED ELSEWHERE

A. Section 02210 - Site Grading

1.03 SUBMITTALS

A. The Contractor shall submit submittals for review in accordance with the Section 01300 - Submittals.

1.04 DEFINITIONS

A. The phrase “DOT Specifications” shall refer to the Florida Department of Transportation Standard Specifications for Road and Bridge Construction. The DOT Specifications are referred to herein and are hereby made a part of this Contract to the extent of such references, and shall be as binding upon the Contract as though reproduced herein in their entirety.

1.05 PROTECTION OF EXISTING IMPROVEMENTS

A. The Contractor shall be responsible for the protection of all pavements and other improvements within the work area. All damage to such improvements, as a result of the Contractor's operations, beyond the limits of the work of pavement replacement shall be repaired by the Contractor at his expense.

1.06 GUARANTEE

A. The Contractor shall guarantee all trees, ground cover or shrubs planted or replanted under this Contract for a period of one year beyond acceptance of the project. In the event that any new tree, plant or shrub dies within the guarantee period, the Contractor shall be responsible for replacement in kind. In the event that a transplanted (reused) tree dies within the guarantee period, the Contractor shall be responsible for replacement in kind, except that the maximum height of any new tree shall be eight feet as measured from the ground surface, once planted, to the top of the tree.

PART 2 PRODUCTS

2.01 REPLACEMENT TREES, GROUND COVER AND SHRUBS

A. Replacement trees, ground cover and shrubs shall be of the same type and size and sound, healthy and vigorous, well branched and densely foliated when in leaf. They shall have healthy, well developed root systems and shall be free of disease and insect pests, eggs or larvae.

2.02 MULCH

A. Mulch shall be windproof shredded eucalyptus. Mulch shall be clean, fresh, free of branches and other foreign matter. Mulch shall be used around all shrubs, ground covers and tree trunks, and placed to a minimum depth of 2 inches extending from the tree trunk outward two feet.

2.03 GRAVEL BEDS

A. Filter Fabric: Filter fabric shall be nonwoven polyester material Trevia Type 1120 as manufactured by Hoechst Fibers Industries, or equal. Fabric weight shall be 6 ounces per square yard, puncture strength maximum 40 pounds, minimum Flux 240 gallons per minute per square foot. Fabric shall be installed in accordance with the manufacturer's recommendations, with precautions taken to avoid tearing the fabric. Fabric shall be laid in strips with a minimum overlap of one foot.

B. Limerock: Limerock shall meet ASTM A57 standards and shall be prewashed. Maximum size shall be 3/4 inches. Limerock shall be carefully placed and spread on the fabric to a minimum depth of 6 inches. Final grades and locations shall be as designated on the Drawings.

PART 3 EXECUTION

3.01 GRADING AND SODDING

A. The Contractor shall regrade the work areas disturbed by his construction activities to the existing grade prior to commencement of construction.

B. Sod shall be placed on all grassed areas disturbed by construction activities, unless otherwise indicated on the Drawings. Sodding shall be in accordance with Sections 575 and 981 of the DOT Specifications. Sod Placed on slopes 3:1 (H:V) or steeper shall be staked or pinned.

C. Maintenance: Sufficient watering shall be done by the Contractor to maintain adequate moisture for optimum development of the sodded areas. Sodded areas shall receive no less than 1.5 inches of water per week.

D. Repairs to Lawn Areas Disturbed by Contractor's Operations: Lawn areas damaged by Contractor's operations shall be repaired at once by proper sod bed preparation, fertilization and resodding, in accordance with these specifications. Regardless of the condition of the lawn area (weed content etc.) prior to the Contractor working in the area, all repairs shall be made with sod.

3.02 TREES, GROUND COVER AND SHRUBS

A. Excavation and Plant Holes: Plant hole excavations shall be roughly cylindrical in shape, with the side approximately vertical. Plants shall be centered in the hole. Bottoms of the holes shall be loosened at least six inches deeper than the required depth of excavation.

B. Holes for balled and burlaped plants shall be large enough to allow at least eight inches of backfill around the earth ball. For root balls over 18 inches in diameter, this dimension shall be increased to 12 inches. Where excess material has been excavated from the plant hole, the excavated material shall be disposed of as and where directed by the Engineer.

C. Setting of Plants: When lowered into the hole, the plant shall rest on a prepared hole bottom such that the roots are level with, or slightly above, the level of their previous growth and so oriented such as to present the best appearance. The Contractor, when setting plants in holes, shall make allowances for any anticipated settling of plants.

D. Palms of the sabal species may be set deeper than the depth of their original growth, provided that the specified clear trunk height is attained.

E. The backfill shall be made with planting mixture and shall be firmly rodded and watered-in, so that no air pockets remain. The quantity of water applied immediately upon planting shall be sufficient to thoroughly moisten all of the backfilled earth. Plants shall be kept in a moistened condition for the duration of the Contract.

F. Staking and Guying: Plants shall be staked in accordance with the following provisions:

1. Small Trees: For trees and shrubs of less than one-inch caliper, the size of stakes and the method of tying shall be such as to rigidly support the staked plant against damage caused by wind action or other effects. Trees larger than one inch and smaller than one and one-half inch caliper shall be staked with a two-inch stake, set at least 24 inches in the ground and extending to the crown of the plant. The plant shall be firmly fastened to the stake with two strands of 14 gauge soft wire, enclosed in rubber hose, or other approved covering. The wire shall then be nailed or stapled to the stake to prevent slippage.

2. Medium Trees: All trees, other than palm trees, larger than one and one-half inch caliper and smaller than two and one-half inch caliper shall be staked with two or more, two-inch by two-inch stakes, eight feet long, set two feet in the ground. The tree shall be midway between the stakes and held firmly in place by two strands of 12-gauge wire, applied as specified above for single stakes. The wires shall be tightened and kept tight by twisting.

3. Large Trees: All trees, other than palm trees, larger than two and one-half inch caliper, shall be braced with three or more two-inch by four-inch wood braces, toenailed to cleats which are securely banded at two pints to the palm, at a point at least six feet above the ground. The trunk shall be padded with five layers of burlap under the cleats. Braces shall be approximately equidistantly spaced and secured underground with two-inch by four-inch by 24-inch stake pads. In firm rock soils, Number 4 steel reinforcing rods or one-half inch pipe is acceptable.

4. Palm Trees: Palm trees shall be braced with three or more two-inch by four-inch wood braces, toenailed to cleats which are securely banded at two points to the palm, at a point at least six feet above the ground. The trunk shall be padded with five layers of burlap under the cleats. Braces shall be approximately equidistantly spaced and secured underground with two-inch by four-inch by 24-inch stake pads. In firm rock soils, Number 4 steel reinforcing rods or one-half inch pipe is acceptable.

G. Pruning: All broken or damaged roots shall be cut off smoothly, and the tops of all trees shall be pruned in a manner complying with standard horticultural practice. At the time pruning is completed, all remaining wood shall be alive. All cut surfaces of one inch or more in diameter, above the ground, shall be treated with an approved commercial tree paint.

H. Maintenance: Maintenance shall begin immediately after each plant is planted and shall continue until all work under this Contract has been completed and accepted by OWNER.

Plants shall be watered, mulched, weeded, pruned, sprayed, fertilized, cultivated and otherwise maintained and protected. Settled plants shall be reset to proper grade position, planting saucer restored and dead material removed. Guys shall be tightened and repaired.

I. Defective work shall be corrected as soon as possible after it becomes apparent. Upon completion of planting, the Contractor shall remove excess soil and debris, and repair any damage to structures, etc., resulting from planting operations.

3.03 GRAVEL BEDS

A. Clean, grade and place geotextile prior to placing gravel in gravel beds.

END OF SECTION

© 2019 CDM Smith
All Rights Reserved

SECTION 02513
CONCRETE PAVING RESTORATION

PART 1 GENERAL

1.01 SCOPE OF WORK

A. Contractor shall furnish all labor, materials, equipment and incidentals required and place concrete pavement in accordance with the grades and typical sections shown on the drawings and as specified herein.

1.02 RELATED WORK

A. Section 02100: Site Preparation

B. Section 02515: Concrete Walkways

C. Section 02200: Earthwork

1.03 SUBMITTALS

A. Submit to the Engineer, shop drawings showing proposed formulas for concrete paving.

1.04 REFERENCE

A. Florida Department of Transportation (FDOT) Standard Specifications for Road and Bridge Construction 2018.

PART 2 PRODUCTS

2.01 MATERIALS

A. The limerock base shall consist of two courses of grade No. 2 Miami Oolite limerock as specified in the 2016 FDOT Specifications.

B. The material used for the prime coat shall conform with Section 300 of the 2016 FDOT Specifications for primer to be used on Miami Oolite limerock base.

C. Bituminous material for tack coat shall conform with Section 916 of the 2016 FDOT Specifications for the grade used and may be any suitable grade of R.C.

D. The materials for the concrete surface shall conform with applicable sections of 2016 FDOT Specifications, Sections 330 and 916 for Type SP12.5 Concrete Surface Course.

E. The paint used for parking and traffic stripes shall be yellow traffic paint which conforms to Section 710 of the 2016 FDOT Specification.

PART 3 EXECUTION

3.01 INSTALLATION

A. The sub-grade preparation shall comply with the requirements of the 2016 FDOT Specifications. All soft and yielding material and other portions of the sub-grade which will not compact readily shall be removed and replaced with suitable material and the whole sub-grade brought to line and grade and to a foundation of uniform compaction and support. The cost of removing and replacing unsuitable material shall be included in the bid for the paving.

B. The top 12 inches of the sub-grade, in both cut and fill sections, shall be compacted to a density of at least 95 percent of the soil's maximum dry density as determined by ASTM D1557. All subgrade compaction shall be performed "in the dry". Proper moisture control shall be maintained throughout the compaction process. The sub-grade shall be shaped prior testing and verifying compaction. The required density shall be maintained until the base or pavement has been laid or until the aggregate materials for the base or pavement course have been spread in place.

C. The minimum compacted thickness of the limerock base shall be 10 inches applied and compacted in two layers of equal depth unless otherwise shown on the drawings or as approved by the Engineer. The width of the limerock base shall be 2 feet wider than the pavement, 1 ft on each side. Provide 3-foot wide stabilized shoulder on each side of the road base where shown on the drawings.

D. Before the prime coat is applied, all loose material, dust, dirt or other foreign material which might prevent bond with existing surface shall be moved to the shoulders to the full width of the base by means of revolving brooms, mechanical sweepers, blowers supplemented by hand sweeping or other methods approved by the Engineer. The glazed finish shall have been removed from the base. The prime coat shall be applied by a pressure distributor so that approximately 0.1 gallons per square yard is applied uniformly and thoroughly to a clean surface.

E. Prior to the application of the surface course, all loose material, dust, dirt and all foreign material which might prevent proper bond with the existing surface shall be removed to the full width of the repair by means of approved mechanical sweepers and supplemented by hand sweeping if required.

F. Apply bituminous tack coat at a rate between 0.02 and 0.10 gallons per square yard. Bituminous material shall be heated as per Manufacturer's recommendations.

G. The concrete shall be placed at an average thickness of 2 inches unless otherwise shown on the drawings.

H. All manhole castings, valve boxes or other utility castings within the area to be surfaces shall be adjusted to the proposed surface elevation by the Contractor. The work shall be accomplished in such a manner as to leave the casting fixed permanently in its correct position.

3.02 PAVEMENT REPAIR

A. All damage to pavement as a result of work (construction or maintenance) under this contract shall be repaired in a manner satisfactory to the Engineer and at no additional cost to the OWNER. Pavement shall be repaired to match the original surface material and original grade. However, the asphalt concrete thickness shall not be less than 2 inches. The repair shall include the preparation of the sub-grade, the placing and compacting of the limerock base, the priming of the base, the placing and maintaining of the surface treatment, all as specified herein.

B. The width of all repairs shall extend at least 12 inches beyond the limit of the damage. The edge of the pavement to be left in place shall be cut to a true edge with a saw or other approved method so as to provide a clean edge to abut the repair. The line of the repair shall be reasonably uniform with no unnecessary irregularities.

3.03 TESTING

A. The Engineer shall have density materials and such other tests performed as deemed necessary. The Contractor shall pay the costs of such tests. The Contractor shall fully cooperate with the testing agency. Should any test indicate that any portion of the materials or workmanship does not comply with these specifications, a retest shall be performed at the Contractor's expense. If the retest confirms the first test, that portion of the work shall be removed and replaced or reworked at no additional cost to the Owner until satisfactory compliance is attained.

3.04 PARKING AND TRAFFIC STRIPES

A. The Contractor shall paint the stripes indicated on the drawings. The paint shall be applied in strict accordance with printed specifications of the Manufacturer of the paint being applied and Section 710 of the 2016 FDOT Standard Specifications. Unless otherwise indicated, the width of the stripes shall be 4 inches.

3.05 LAYING OF CONCRETE

A. The Contractor shall place the concrete pavement in conformance with the following:

1. Limitations of Operations: The laying operations shall not begin unless the weather is suitable for all activities to be completed in dry conditions.

2. Preparation: The preparation of the asphalt cement, aggregates and mixture shall conform to 2016 FDOT Specification Section 330-4, 5, and 6.

3. Transportation: The mixture shall be transported as specified in 2016 FDOT Specification Section 330-7.

4. Joints: Prepare joints in accordance with Section 330-11 of the 2016 FDOT Specifications. Maintain a smooth transition between existing and new pavement.

5. Pavement Cuts: Maintain all pavement cuts to the approval of the OWNER until the Project is complete. Surface course cuts during construction must have all edges saw cut prior to replacements.

6. Placing Mixture: Placing the mixture shall conform to 2016 FDOT Specification Section 330-9. Lift thickness shall be as shown on the drawings.

7. Compacting Mixture: Compaction of the concrete shall be in accordance with the 2016 FDOT Specification Section 330-10. Compact to an average density of at least 98 percent of the valid control strip density. The control strip density is determined by the method defined in Section 330-11.3.2 of the 2016 FDOT Specifications.

8. Surface Requirements: The surface shall conform to the 2016 FDOT Specification Section 330-12.4, except that the criteria for the maximum allowable deficiency in the final surface layer shall be 3/16 inch for all locations and types of paved areas. The finished surface must be of uniform texture and compaction. Any pulled, torn, or loosened asphalt, or any areas with open pores, segregation, sand streaks, sand spots, or ripples must be corrected. Correct thickness deficiencies by either replacing the full thickness for a length extending at least 50 feet beyond each end of the deficient area, for the full width of the paving lane, or (when permitted by the DISTRICT) by overlaying.

3.06 PROTECTION OF FINISHED SURFACES

A. The Contractor shall protect the finished concrete pavement surface upon completion. No dumping of any material directly on the pavement shall be permitted. Vehicular traffic shall not be permitted on any pavement that has not set sufficiently to prevent rutting or other distortion.

END OF SECTION

© 2019 CDM Smith
All Rights Reserved

SECTION 02515
CONCRETE WALKWAYS

PART 1 GENERAL

1.01 SCOPE OF WORK

A. Contractor shall furnish all labor, materials, equipment and incidentals required and install concrete walkways, pads and pond aprons as shown on the Drawings and as specified herein.

1.02 RELATED WORK

A. Earthwork is included in Section 02200.

B. Sodding is included in Section 02932.

C. Site Preparation is included in Section 02100.

1.03 REFERENCE STANDARDS

A. American Society for Testing and Materials (ASTM)

1. ASTM A185 - Standard Specification for Steel Welded Wire Fabric, Plain, for Concrete Reinforcement.

B. American Association of State Highway and Transportation Officials (AASHTO)

1. AASHTO M213 - Standard Specification for Preformed Expansion Joint Fillers for Concrete Paving and Structural Construction (Nonextruding and Resilient Bituminous Types)

C. Where reference is made to one of the above standards, the revision in effect at the time of bid opening shall apply.

1.04 SUBMITTALS

A. Submit to the Engineer, as provided in Section 01300, shop drawings showing dimensions and layouts of sidewalks and reinforcement for concrete work.

PART 2 PRODUCTS

2.01 MATERIALS

A. Concrete shall be as specified in Section 03300, but in no case less than 3,500 psi at 28 days.

B. Welded wire fabric shall conform to ASTM A185 and shall be of size and gauge shown.

C. Expansion joint filler shall be bituminous type, 1/2-in thick meeting AASHTO M-213-65.

D. Materials for gravel base course shall be as specified in Section 02230.

© 2019 CDM Smith
All Rights Reserved

PART 3 EXECUTION

3.01 INSTALLATION

A. The subgrade for walkways shall be shaped parallel to the proposed surface of the walkways and thoroughly compacted. All depressions occurring shall be filled and again compacted until the surface is smooth and hard.

B. After the subgrade has been prepared, a gravel base course shall be placed. After being thoroughly compacted, the base course shall be at least 8-in in thickness and parallel to the proposed surface of the walkway.

C. Forms

1. Side and transverse forms shall be smooth, free from warp, of sufficient strength to resist springing out of shape, of a depth to conform to the thickness of the walkway and of a type satisfactory to the Engineer.

2. All mortar or dirt shall be completely removed from forms that have been previously used. The forms shall be well staked and thoroughly braced and set to the established lines with their upper edge conforming to the grade of the finished walk which shall have sufficient pitch to provide for surface drainage, but not to exceed 1/4-in/ft.

3. All forms shall be oiled as specified in Section 03300 before placing concrete.

D. Wire Fabric Reinforcement

1. All wire fabric shall be stored off the ground and shall be protected from moisture and be kept free from dirt, oil, or injurious coatings.

2. Splices in welded wire fabric shall be lapped not less than 1-1/2 courses or 12-in, whichever is greater. Wire fabric splices shall be tied together with wire ties as approved spaced no more than 24-in on center. Support as approved in middle of slab.

3. Before being placed in position, wire fabric shall be thoroughly cleaned of loose mill and rust scale, dirt and other coatings, including ice, that reduce or destroy bond. Where there is delay in depositing concrete after reinforcement is in place, fabric shall be re-inspected and cleaned when necessary.

4. In no case shall wire fabric be covered with concrete until the amount and position of the fabric has been checked by the Engineer and his/her permission given to proceed with the concreting.

E. Placing and Finishing Concrete

1. Concrete walkways shall be placed in alternate slabs not exceeding 30-ft in length, except as otherwise ordered. The slabs shall be separated by transverse, preformed expansion joint filler.

2. Preformed expansion joint filler shall be placed adjacent to structures as directed.

3. Concrete shall be placed in such quantity that, after being thoroughly consolidated in place, it shall be 4-in in depth. Finishing operations shall be delayed until all bled water and water sheen has left the surface and concrete has started to stiffen. After water sheen has disappeared, edging operations shall be completed. After edging and jointing operations, the surface shall be floated with an aluminum or magnesium float. Immediately following floating, the surface shall be steel troweled. If necessary, tooled joints and edges shall be rerun before and after troweling to maintain uniformity. Finish with broom at right angles to alignment of walk, then round all edges with 1/4-in radius after brooming.

4. When completed, the walkways shall be kept moist and protected from traffic and weather for at least 3 days.

5. Local conditions, codes and practices shall govern all drive cuts, apron, and related curbs and gutters (if any). Contractor shall obtain permission for, coordinate with local officials, and secure and pay for all permits, fees and licenses necessary for proper execution of the work.

END OF SECTION

© 2019 CDM Smith
All Rights Reserved

THIS PAGE INTENTIONALLY LEFT BLANK

© 2019 CDM Smith
All Rights Reserved

SECTION 02605
PRECAST MANHOLES AND STRUCTURES

PART 1 GENERAL

1.01 SCOPE OF WORK

A. Furnish all labor, materials, equipment and incidentals required and install precast concrete structures, access hatches, rungs and appurtenances all as shown on the Drawings and as specified herein.

1.02 RELATED WORK

A. Trenching and backfill is included is Section 02221.

B. Screened gravel bedding is included in Section 02230.

C. Cast-in-place concrete is included in Section 03300.

D. Electrical building is included in Section 03480.

1.03 SUBMITTALS

A. Submit, in accordance with Section 01300, shop drawings showing details of construction, reinforcing, joints, pipe connection to structure, access hatches and rungs.

B. Submit for review, structural calculations and drawings for all precast structures.

C. Concrete design mix data and concrete test cylinder reports from an approved concrete testing laboratory certifying that the concrete used in the precast structures conforms with the strength requirements specified herein.

1.04 REFERENCE STANDARDS

A. ASTM International

1. ASTM A48 - Standard Specification for Gray Iron Castings

2. ASTM A615 - Standard Specification for Deformed and Plain Billet-Steel Bars for Concrete Reinforcement.

3. ASTM C150 - Standard Specification for Portland Cement.

4. ASTM C478 - Standard Specification for Precast Reinforced Concrete Manhole Sections.

5. ASTM D4101 - Standard Specification for Propylene Plastic Injection and Extrusion Materials.

B. American Concrete Institute (ACI)

1. ACI 318 - Building Code Requirement for Structural Concrete.

C. American Association of State Highway and Transportation Officials (AASHTO)

D. Occupational Safety and Health Administration (OSHA)

E. Where reference is made to one of the above standards, the revision in effect at the time of bid opening shall apply.

1.05 QUALITY ASSURANCE

A. The quality of all materials, the process of manufacture, and the finished sections shall be subject to inspection and approval by the Engineer, or other representative of the Owner. Such inspection may be made at the place of manufacture, or on the work after delivery, or at both places and the materials shall be subject to rejection at any time on account of failure to meet any of the requirements specified herein; even though samples may have been accepted as satisfactory at the place of manufacture. Material rejected after delivery to the job shall be marked for identification and shall be removed from the job at once. All materials which have been damaged after delivery will be rejected, and if already installed, shall be acceptably repaired, if permitted, or removed and replaced, entirely at the Contractor's expense.

B. At the time of inspection, the materials will be carefully examined for compliance with the ASTM standard specified below and this Section and with the approved manufacturer's drawings. All precast structure sections shall be inspected for general appearance, dimension, "scratch-strength", blisters, cracks, roughness, soundness, etc. The surface shall be dense and close-textured.

C. Imperfections in precast structure sections may be repaired, subject to the approval of the Engineer, after demonstration by the manufacturer that strong and permanent repairs result. Repairs shall be carefully inspected before final approval. Cement mortar used for repairs shall have a minimum compressive strength of 4,000 psi at 7 days and 5,000 psi at 28 days, when tested in 3-in by 6-in cylinders stored in the standard manner. Epoxy mortar may be utilized for repairs subject to the approval of the Engineer.

PART 2 PRODUCTS

2.01 PRECAST CONCRETE STRUCTURES

A. Requirements for the electrical building are included in Section 03480.

B. The precast reinforced concrete structures shall be manufactured by Hanson Pipe & Precast, Inc.; Forterra Pipe and Precast or equal. The inside dimensions, headroom requirements and minimum thickness of concrete (if applicable) shall be as indicated on the Drawings.

C. Structural design calculations and Drawings shall be prepared and stamped by a professional engineer registered in the State of Florida.

D. All precast concrete shall have a minimum compressive strength of 5000 psi at 28 days. Water shall be kept to a minimum to obtain concrete which is as dense and watertight as possible. The maximum water-to-cement ratio shall be 0.40 by weight and the minimum cement content shall be 600 lbs of cement per cubic yard of concrete. The above ratios shall be revised for sacks of cement weighing different from 94 pounds per sack.

E. Design Criteria

1. All precast concrete members shall conform to ACI 318.

2. When the design yield strength "fy" for tension reinforcement exceeds 40,000 psi, the "z" values referred to in ACI 318 shall not exceed 95 kips/in. The flexural stress in reinforcement under service loads "fs" shall be calculated and shall not be greater than 50 percent of the specified yield strength fy.

3. The precast concrete structure's elements shall be designed to support their own weight, the weight of soil above at 120 pcf and shall be capable of withstanding a live load equal to a 300 psf applied to the top slab.

4. The base slab and walls shall be cast together to form a monolithic base section.

5. All exterior walls shall be designed for an equivalent fluid pressure of 90 lbs/sq ft. The top of the pressure diagram shall be assumed to originate at finished ground level.

6. The structural design shall take into account discontinuities in the structure produced by openings and joints in the structure.

7. The structures shall be designed to prevent flotation without the benefit of skin friction when the ground water level is at finished ground surface. Flotation forces shall be resisted by the dead load of the structure and soil directly above the anti-flotation collar of the structure. Weight of equipment and piping within the structure and soil frictional forces shall not be considered as being effective in resisting flotation forces.

8. All walls and slabs shall be analyzed by accepted engineering principles. Openings shall be completely framed as required to carry the full design loads to support walls. All slabs and walls shall be fully reinforced on both faces and the minimum reinforcing shall be No. 5 at 12-in E.F.E.W. Additional reinforcing shall be provided around all openings.

9. The horizontal wall joints shall not be located within 18-in of the horizontal centerline of wall penetrations.

F. The structure shall be built by the manufacturer in no more than three major sections including the top slab if required.

G. Where top slabs are used or required, lifting hooks shall be provided.

H. As required, access openings and pipe penetrations shall be formed openings and located as shown on the Drawings.

2.02 JOINTING PRECAST STRUCTURE SECTIONS

A. Tongue and groove joints of precast structure sections shall be sealed with either a round rubber O-ring gasket or a preformed flexible joint sealant. The O-ring shall conform to ASTM C443. The preformed flexible joint sealant shall be Kent Seal No. 2 by Hamilton-Kent; Ram-Nek by K.T. Snyder Company or equal.

B. Joints shall be designed and manufactured so that the completed joint will withstand an internal water pressure of 15 psi without leakage or displacement of the gasket or sealant.

2.03 ACCESS HATCH(ES)

A. The precast structures shall be furnished with the necessary aluminum access hatches as shown on the drawings and specified herein, complete with hinged and pad-lockable covers.

B. Hatches shall be coordinated with the Drawings. Covers shall be aluminum ¼" diamond pattern plate reinforced on the underside to withstand H-20 loadings with a maximum deflection of 1/150th of the span. Channel frame shall be a ¼" minimum aluminum with full anchor flange around the perimeter.

C. Covers shall be equipped with heavy stainless steel hinges with stainless steel pins and shall pivot so cover does not protrude into the channel frame. Hinges shall be through bolted to the cover and frame with tamper proof stainless steel lock bolts. Covers shall be equipped with compression springs enclosed in telescopic tubes. Upper tube shall be the outer tube to prevent accumulation of moisture, grit and debris inside the tube assembly. Lower tube shall interlock with a flanged support shoe fastened to a formed ¼" guesser support plate.

D. Covers shall be fitted with the required number and size of compression springs operators to afford ease of operation through the entire arc of opening and to act as a check in retarding downward motion when being closed. Covers shall be equipped with a hold-open arm that automatically locks the cover in the open position. A conveniently located handle shall release the cover for closing.

E. A stainless steel snap lock with fixed turn handle shall be mounted on the underside of the cover. A removable exterior latch handle shall be provided and the latch release shall be protected by flush, gasketed, removable screw type of plug. Cover shall have a lift handle that is designed to be flushed with the walking surface when not in use. Hardware shall be 316 stainless steel - including tubes, springs, lifting, mechanism supports and tube caps, support shoes, hold-open arms, hinges hinge pins, safety chains snap lock and lock strike. Hold-open arm guide shall be manufactured of aluminum or stainless steel.

F. Factory finish shall be mill finish aluminum with bituminous coating applied to exterior of frame that will be in contact with concrete.

G. Hatches shall be U.S. Foundry Corporation, Bilco Company, Halliday Products Company or approved equal.

2.04 PIPE OPENING SEALS FOR PRECAST STRUCTURES

A. The opening for the pipe in the Precast Structures shall be sealed with non-shrink waterproof grout, Hallemite: Waterplug; Embeco or equal, after the pipe has been successfully installed and inspected by the Owner's representative.

2.05 DAMPPROOFING

A. Damproofing shall be applied to all portions of the precast structure which are in contact with soil from the top of the footings up to 6-inches below finished grade. Carry dampproofing aver exposed top and outside edge of footing or anti-flotation collar.

B. Brushed dampproofing shall be an asphalt emulsion reinforced with fibers conforming to ASTM D1227, Type II, Class 1. The dampproofing shall be Hydrocide 700B by Sonneborn Building Products, Division of ChemRex Inc., Minneapolis, MN; Karnak 220 Asphalt Emulsion by Karnak Corporation, Clark, NJ or equal.

PART 3 EXECUTION

3.01 INSTALLATION

A. Precast Structure Installation

1. Precast Structure shall be constructed to the dimensions shown on the Drawings and as specified herein. All work shall be protected against flooding and flotation.

2. The bases of precast structures shall be placed on a bed of 12-in flowable fill as shown on the Drawings.

3. Holes in the precast structure sections required for handling or other purposes shall be plugged with a non-shrinking grout or non-shrinking grout in combination with concrete plugs and finished flush on the inside.

4. Where holes must be cut in the precast sections to accommodate pipes, cutting shall be done prior to setting precast structure sections in place to prevent any subsequent jarring which may loosen the mortar joints.

B. Dampproofing

1. Outer surfaces of precast structures shall dampproofed at the rate of 30 to 35 sq ft per gallon as directed by the Engineer and in accordance with manufacturer's instructions.

3.02 LEAKAGE TESTS

A. Leakage Tests for Precast Structures

1. The Engineer will visually inspect structure(s) for possible leaks before backfilling of structures is allowed. All joints shall be sealed to the satisfaction of the Engineer.

3.03 CLEANING

A. All new precast structures shall be thoroughly cleaned of all silt, debris and foreign matter of any kind, prior to final inspection.

END OF SECTION

© 2019 CDM Smith
All Rights Reserved

THIS PAGE INTENTIONALLY LEFT BLANK

© 2019 CDM Smith
All Rights Reserved

SECTION 02616
SEWAGE FORCE MAINS AND YARD PIPING

PART 1 GENERAL

1.01 POTABLE WATER PIPING

A. Shall be as specified in the JEA Water and Wastewater Standards (January 2019 or latest), Potable Water Piping – Section 350.

1.02 POTABLE WATER VALVES AND APPURTENANCES

A. Shall be as specified in the JEA Water and Wastewater Standards (January 2019 or latest), Water Valves and Appurtenances – Section 351.

1.03 WASTEWATER PIPE AND FITTINGS

A. Shall be as specified in the JEA Water and Wastewater Standards (January 2019 or latest), Wastewater Force Mains – Section 429. See Specification 15066 for stainless steel pipe requirements.

B. Shall be as specified in the JEA Water and Wastewater Standards (January 2019 or latest), Wastewater Valves and Appurtenances – Section 430. See Specification 15066 for stainless steel pipe requirements.

END OF SECTION

© 2019 CDM Smith
All Rights Reserved

THIS PAGE INTENTIONALLY LEFT BLANK

© 2019 CDM Smith
All Rights Reserved

SECTION 02630
STORM SEWERS AND STRUCTURES

PART 1 GENERAL

1.01 SECTION INCLUDES

A. Storm sewer systems as specified in this Section and as shown on the Drawings.

1.02 REFERENCES

A. General: As specified in Section titled Reference Standards.

B. ASTM Standards

1. ASTM A615 Specification for Deformed and Plain Billet-Steel Bars for Concrete Reinforcement
2. ASTM C76 Specification for Reinforced Concrete Culvert, Storm Drain, and Sewer Pipe
3. ASTM C91 Specification for Masonry Cement
4. ASTM C144 Specification for Aggregate for Masonry Mortar.
5. ASTM C150 Specification for Portland Cement
6. ASTM C270 Specification for Mortar for Unit Masonry
7. ASTM D1784 Specification for Rigid Poly (Vinyl Chloride) (PVC) Compounds and Chlorinated Poly (Vinyl Chloride) (CPVC) Compounds.
8. ASTM D2729 Specification for Poly (Vinyl Chloride) (PVC) Sewer Pipe and Fittings
9. ASTM D3034 Specification for Type PSM Poly (Vinyl Chloride) (PVC) Sewer Pipe and Fittings.
10. ASTM D3212 Specification for Joints for Drain and Sewer Plastic Pipes Using Flexible Elastomeric Seals
11. ASTM F477 Specification for Elastomeric Seals (Gaskets) for Joining Plastic Pipe
12. ASTM F679 Specification for Poly (Vinyl Chloride) (PVC) Large-Diameter Plastic Gravity Sewer Pipe and Fittings.

1.03 DEFINITIONS

A. Pipe sizes and references to pipe diameter on the Drawings and in the Specifications are intended to be nominal size or diameter, and shall be interpreted as nominal size or diameter.

1.04 SYSTEM DESCRIPTION

A. Furnish and install pipe, fittings, and structures required for complete and properly functioning storm sewer systems.

1.05 SUBMITTALS

A. General as specified in

1. Section 01300 entitled "Submittals"

2. This Section

B. Shop Drawings

1. Shop Drawings for pipe, fittings, castings, precast structures, and appurtenances include the information specified in Section 01300 as well as the following in each submittal:
   a. Specification Section number;
   b. Catalog data including the following:
      1) Specifications
      2) Intended Service
      3) Illustration in sufficient detail to serve as a guide for evaluation.
   c. Materials of construction;
   d. Dimensions;
   e. Additional information required to evaluate the proposed product's compliance with the Contract Documents.

2. Shop Drawings for storm sewer systems layout and installation: include dimensions and elevations in each storm sewer system layout and installation submittal.

C. Certifications

1. Prior to delivery at project site, furnish an Affidavit of Compliance certified by the product manufacturer that the pipe, fittings, castings, and precast structures furnished under this Contract comply with all applicable provisions of applicable referenced standards and these Specifications.

1.06 QUALITY ASSURANCE

A. Marking

1. Mark pipe, fittings, and castings.

2. Markings shall meet the requirements of applicable Standards.

B. Factory Tests

1. Test materials used in the manufacture of the pipe, fittings, castings, and precast structures.

2. Tests shall meet the requirements of applicable Specifications and Standards.

C. Castings

1. Casting manufacturer shall provide letter of guarantee for a period of 15 years.

2. Upon request of Engineer, manufacturers shall also furnish an independent testing laboratory's report of castings supplied.

3. Frame and cover surfaces shall be machined and any tendency to rattle, as determined by tests before or after installation, will be sufficient cause for rejection of the frame and cover.

1.07 PRODUCT DELIVERY, STORAGE AND HANDLING

A. CONTRACTOR shall be responsible for the delivery, storage and handling of products. Load and unload storm sewer materials and appurtenances by hoists or skidding. Do not drop products. Do not skid or roll products on or against other products. Pad slings and hooks in a manner which prevents damage to products.

B. Deliver pipe, fittings, castings, precast structures, and accessories in a clean and undamaged condition. Store pipe, fittings, castings, and accessories off the ground.

C. Keep stored products safe from damage or deterioration. Keep the interior of pipe, fittings, castings, and appurtenances free from dirt or foreign matter. Store gaskets, plastic pipe and fittings, and other products which will be deteriorated by sunlight in a cool location out of direct sunlight. Gaskets shall not come in contact with petroleum products.

D. Do not stack sewer pipe, fittings, castings, or precast structures.

E. Promptly remove damaged products from the job site. Replace damaged products with undamaged products.

PART 2 PRODUCTS

2.01 REINFORCED CONCRETE PIPE

A. Pipe Standard: ASTM C76, Class III with Wall Type B reinforcement

B. Pipe Joints

1. Type: Bell and spigot.

2. Joint Standard: Rubber gasket joints conforming to Sections 941 and 942 of FDOT Standard Specifications.

C. Lifting Holes: Do not use lifting holes in circular pipe 30 inches in diameter or less.

2.02 POLYVINYL CHLORIDE (PVC) STORM SEWER PIPE (8 INCHES THROUGH 15 INCHES)

A. Material Standard: ASTM D1784, Cell Classification 12454-B or 12454-C.

B. Pipe and Fitting Standard: ASTM D3034

C. Minimum Wall Thickness: SDR35.

D. Maximum Pipe Section Length: 12 feet 6 inches

E. Joints

1. Type: Bell and spigot with rubber gaskets

2. Joint Standard: ASTM D3212

3. Gasket Standard: ASTM F477

2.03 CORRUGATED HIGH DENSITY POLYETHYLENE (HDPE) STORM SEWER PIPE (12 INCHES THROUGH 60 INCHES)

A. Material Standard: ASTM D3350, Minimum Cell Classification 435400C

B. Pipe and Fitting Standard: CLASS I, AASHTO M294

C. Corrugations: Annular.

D. Maximum Pipe Section Length: 20 feet

E. Joints

1. Type: Bell and spigot with rubber gaskets

2. Joint Standard: ASTM D3212

3. Gasket Standard: ASTM F477

2.04 POLYVINYL CHLORIDE (PVC) STORM SEWER PIPE (18 INCHES THROUGH 36 INCHES)

A. Material Standard: ASTM D1784, Cell Classification 12454-C

B. Pipe and Fitting Standard: ASTM F679

C. Minimum Wall Thickness: T-1.

D. Maximum Pipe Section Length: 12 feet 6 inches

E. Joints

1. Type: Bell and spigot with rubber gaskets

2. Joint Standard: ASTM D3212

3. Gasket Standard: ASTM F477

2.05 POLYVINYL CHLORIDE (PVC) PERFORATED DRAIN PIPE

A. Material Standard: ASTM D1784, Cell Classification 12454-B.

B. Pipe and Fitting Standard: ASTM D2729.

C. Joints

1. Type: Bell and spigot with rubber gaskets

2. Joint Standard: ASTM D3212

3. Gasket Standard: ASTM F477.

2.06 PRECAST CONCRETE STRUCTURES

A. Precast concrete storm water drainage structures and precast concrete storm sewer structures shall conform to City of Jacksonville Standard Specifications and Details.

B. Precast concrete storm water drainage structures and precast concrete storm sewer structures shall be as manufactured by U.S. Precast Corp., Miami, Florida, or equal.

C. Precast concrete storm water drainage structure size and precast concrete storm sewer structure size shall be as indicated on the Drawings.

2.07 MORTAR FOR STORM SEWER STRUCTURES

A. Standard: ASTM C270.

B. Mortar Type: Portland cement/hydrated lime mixture or Portland cement mixture with masonry cement added for improved workability; use same materials throughout the project.

C. Mortar Materials

1. Proportioning: By volume.

2. Mix
   a. One-part Type II Portland Cement (ASTM C150).
   b. Three parts aggregate (sand) (ASTM C144).

3. Masonry Cement: Addition of masonry cement (ASTM C91 will be permitted to improve workability of mortar.

2.08 REINFORCING BARS

A. Standard: ASTM A615.

B. Placement: Lapped and placed in accordance with ACI requirements and specifications.

2.09 CASTINGS

A. Castings shall conform to City of Jacksonville Standard Specifications and Details.

B. Manufacturers

1. USF;

2. Neenah;

3. or equal casting by U.S. manufacturer.

C. Standard: ASTM Specifications for Class 30 Grey Iron.

D. Molds: Closed molds with controlled sand.

E. Casting Quality: Free from blow holes and porosity, well cleaned, with fine and sharp edges ground smooth.

F. Finish: Machined bearing surfaces to prevent rattling under traffic.

G. Lettering: Cast "Storm Sewer" on covers.

H. Matching Square and Rectangular Frames and Covers: Square and rectangular frames, covers and grates shall be individually fitted as sets and installed as sets.

PART 3 EXECUTION

3.01 LAYING PIPE

A. Complete trenching and backfilling as specified. Inspect sewers when line is completed and backfill has been placed to a depth of one foot over the pipe. Complete backfill only after approval of each section has been given for line and grade.

B. Remove and relay faulty sections of line rejected by Engineer.

C. Center pipe so installed storm sewer has a uniform invert.

D. Keep pipe joints clean at all times, and use no pipe in the work which does not conform to Specifications.

E. Place a suitable stopper in the end of pipe last laid at all times when pipe-laying operations are not in process (including lunch hours). Stoppers shall prevent water, mud or other foreign materials from entering the pipe.

F. Ensure all construction conforms to Section 430 of FDOT Standard Specifications.

3.02 JOINTING PIPE

A. Joint pipe by rubber gasket O-ring joints installed in accordance with recommendations of pipe manufacturer.

B. Corrugated metal pipe joints shall consist of bolted galvanized metal connecting band installed with neoprene gasket.

C. Joints shall be designed to limit movement due to expansion, contraction and normal settlement.

3.03 CATCH BASINS, STORM SEWER MANHOLES AND CONCRETE HEADWALLS

A. Construct junction boxes, storm sewer manholes, and concrete headwalls at location and to depth indicated on Drawings and in accordance with details shown on the Drawings.

B. Excavate and backfill in accordance with applicable sections of Specifications.

C. Concrete for the catch basins, storm sewer manholes and concrete headwalls, shall develop a compressive strength of 3000 psi in 28 days.

D. Seal joints between walls and incoming and outgoing pipes with Portland cement mortar to form a watertight joint.

E. Cut off pipes with junction boxes, storm sewer manholes, and concrete headwalls flush with the face of the structure. Grout cut or broken ends of pipes with Portland cement mortar to a smooth uniform covering with no steel exposed.

F. Structures shall conform to Sections 400, 415 and 425 of FDOT Standard Specifications.

G. Construct grated inlets and junction boxes to elevations and dimensions shown on the Drawings. Include any reasonable adjustment and realignment of the grate necessary, or installation on inlet grates. Secure frames in mortar struck smooth inside and out.

3.04 CLEANING

A. Clean dirt and debris from the interior of storm sewers and structures.

3.05 MANUFACTURERS' REPRESENTATIVE

A. Provide services of pipe and precast structure manufacturers' representative as required to obtain correct pipe installation, jointing, connections to structures, and connections to existing piping systems.

B. Provide assistance of pipe and precast structure manufacturers' representatives at no additional cost to Owner.

END OF SECTION

© 2019 CDM Smith
All Rights Reserved

THIS PAGE INTENTIONALLY LEFT BLANK

© 2019 CDM Smith
All Rights Reserved

SECTION 02640
VALVES, HYDRANTS AND APPURTENANCES

PART 1 GENERAL

1.01 VALVES, HYDRANTS AND APPURTENANCES

A. Shall be as specified in the JEA Water and Wastewater Standards (January 2019 or latest Edition), Water Meters, Valves and Appurtenances – Section 351.

END OF SECTION

© 2019 CDM Smith
All Rights Reserved

THIS PAGE INTENTIONALLY LEFT BLANK

© 2019 CDM Smith
All Rights Reserved

SECTION 02667
UTILITY RELOCATION, CONNECTIONS TO AND WORK ON THE EXISTING SYSTEM

PART 1 GENERAL

1.01 SCOPE OF WORK

A. Supply all materials, equipment, and labor required to maintain continuous flow in existing sewers, handle existing wastewater flow, construct and maintain all temporary connections and bypasses, and construct the permanent relocation of the sanitary sewer lines as shown on the Drawings and as directed by the Engineer.

B. Coordinate with the Owner during the course of all construction affecting their facilities. Provide written notification to the Owner and Engineer in advance of all temporary flow diversion, bypass, or connection activities.

C. The Contractor shall notify the Owner and Engineer seven (7) days prior to work on the existing system or the connection to allow time for inspection. Wet taps and connections must be witnessed by the Owner with prior notification provided. No wet taps or connections are to be scheduled on Fridays or Owner holidays. If Contractor fails to provide timely notice, the Owner may require the Contractor to uncover and expose the connection for inspection at the sole cost of the Contractor.

D. Should damage of any kind occur to the existing drain, at the Contractor's own expense and as part of the work under this Item, make repairs to the satisfaction of the Engineer and the Owner.

E. The Contractor shall notify the Engineer immediately of any discrepancies in elevations of existing drains and manholes between those shown on the Drawings and those established during construction in order that the Engineer can make the necessary modifications.

F. All work on existing system and utilities must comply with permits.

G. All new pipe for connection shall conform to the relevant pipe specifications and JEA Standards, and Section 02616.

H. There shall be no cross-connection between the water system and another possible source of contamination.

1.02 RELATED WORK

A. Submittals are included in Section 01300.

B. Excavation is included in Section 02200, and in JEA’s Water and Sewer Standards Manual, Section 408 – Excavation and Earthwork.

C. Trenching, Backfilling and Compaction is included in Section 02221, and in JEA’s Water and Sewer Standards Manual, Section 408 – Excavation and Earthwork.

D. Concrete and Reinforcing Steel is included in Sections 03200 and 03300, Concrete, and in JEA's Water and Sewer Standards Manual, Section 437 – Concrete Work.

E. Potable Water Piping is included in JEA's Water and Sewer Standards Manual, Section 350 – Potable Water Piping, and water valves are included in JEA's Water and Sewer Standards Manual, Section 351.

F. Gravity Sewers are included in JEA's Water and Sewer Standards Manual, Section 428 – Gravity Sewers.

G. Force mains are included in included in JEA's Water and Sewer Standards Manual, Section 429 – Sewage Force Mains, and wastewater valves are included in JEA's Water and Sewer Standards Manual, Section 430 – Wastewater Valves and Appurtenances.

H. Miscellaneous work and cleanup is specified in Section 02901.

1.03 SUBMITTALS

A. Submit, in accordance with Section 01300, all procedures for maintaining flows. Submittals shall include the following:

1. Four copies of a detailed written plan of all methods of flow maintenance, in advance of flow interruption.

1.04 PROTECTION OF EXISTING UTILITIES

A. Assume full responsibility for the protection of all utilities, public or private, including poles, signs, services to buildings, utilities in the street, gas pipes, water pipes, hydrants, sewers, drains, and electric and telephone cables, whether or not they are shown on the Drawings. Contractor is responsible for all damage done to such utilities.

1. Should damage of any kind occur to the existing pipelines, make repairs to the satisfaction of the Engineer as part of the work under this Item.

2. Emergency Pipe Breakage Provisions
   a. In case damage occurs to the existing force mains, Contractor's work shall include having onsite the necessary materials to replace the force mains as acceptable to the Engineer.

B. Carefully support and protect all such utilities from injury of any kind. Repair any damage resulting from the Contractor's operations at Contractor's expense.

C. Assistance will be given the Contractor in determining the location of existing services. The Contractor shall bear full responsibility, however, for obtaining all locations of underground structures and utilities (including existing water services, drain lines, and sewers). Maintain service and pay all costs or charges resulting from damage thereto.

D. Owner will pay the cost of utility relocations that are authorized by the Engineer. Determination of authorized relocations will be based upon the following guidelines:

1. The utility is in physical conflict with the Work.

2. Relocation of utility that can only be relocated by the utility Owner: Owner will pay relocation cost directly to utility Owner. Perform all other utility relocations at the price bid or as agreed by Change Order.

E. Utilities that are not in physical conflict with the Work may be relocated if allowed by the utility Owner. Include the cost for relocating utilities not in physical conflict with the Work in the prices for the Work.

F. Notify the Owner (both aboveground and underground facilities) prior to proceeding with trench excavation whenever such trenching operations are within 20-ft of any existing utility.

G. Notify the Owner if utility is damaged by the Contractor's operations. Repair damaged utility only with written authorization. Provide Engineer a copy of every written authorization.

H. Use granular bedding material to rebed utilities exposed below mid-diameter. Extend granular bedding material to the limits of the excavation and a minimum of 2-ft beyond each side of the exposed utility.

I. Coordinate the removal and replacement of traffic loops and signals, if required for the performance of the work, at no additional cost to the Owner.

PART 2 PRODUCTS (NOT USED)

PART 3 EXECUTION

3.01 HANDLING WASTEWATER FLOWS

A. The Contractor shall furnish all labor, equipment and materials necessary to maintain existing flows, including temporary bypasses and all pumping of drainage that may be required to prevent backing up of drains and shall immediately cart away and remove all offensive matter at the Contractor's own expense.

B. Permission will not be given to overflow, bypass, pump or by any other means convey drainage to any brook, or other water course without permission of the Engineer.

C. All procedures for maintaining flows must meet the approval of the Engineer and submit to the Engineer, for approval, a detailed written plan of all methods of flow maintenance 10 days in advance of flow interruption.

D. Wastewater handling shall conform to all statutory requirements of the FDEP and Owner.

E. The Contractor assumes all liability for failure to properly handle wastewater flows, including fines, penalties, and claims for damages by third parties.

F. If Contractor disturbs the existing waster service, the Contractor shall provide all labor, equipment, and material necessary to restore and maintain existing service level, including bypasses and all disinfection testing that may be required for bacteriological clearing any temporary piping and shall provide assurances that repairs for interruption of service from the

temporary service are available 24 hours a day and 7 days a week. The procedures for maintaining service must meet the approval of the Owner and Engineer.

END OF SECTION

© 2019 CDM Smith
All Rights Reserved

SECTION 02730
AGGREGATE BASE COURSES

PART 1 GENERAL

1.01 REFERENCES

A. The following is a list of standards which may be referenced in this section:

1. American Association of State Highway and Transportation Officials (AASHTO):
   a. T11, Standard Method of Test for Materials Finer Than 75µm (No. 200) Sieve in Mineral Aggregates by Washing.
   b. T27, Standard Method of Test for Sieve Analysis of Fine and Coarse Aggregates.
   c. T89, Standard Specification for Determining the Liquid Limit of Soils.
   d. T90, Standard Specification for Determining the Plastic Limit and Plasticity Index of Soils.
   e. T96, Standard Specification for Resistance to Degradation of Small-Size Coarse Aggregate by Abrasion and Impact in the Los Angeles Machine.
   f. T99, Standard Specification for the Moisture-Density Relations of Soils Using a 2.5 kg (5.5 pound) Rammer and a 305 mm (12 in) Drop.
   g. T180, Standard Specification for Moisture-Density Relations of Soils Using a 4.54 kg (10-lb) Rammer and a 457 mm (18-in) Drop.
   h. T190, Standard Specification for Resistance R-Value and Expansion Pressure of Compacted Soils.
   i. T265, Standard Method of Test for Laboratory Determination of Moisture Content of Soils.
   j. T310, Standard Specification for In-Place Density and Moisture Content of Soil and Soil-Aggregate by Nuclear Methods (Shallow Depth).

2. ASTM International (ASTM):
   a. C88, Test Method for Soundness of Aggregates by Use of Sodium Sulfate or Magnesium Sulfate.
   b. D1883, Test Method for CBR (California Bearing Ratio) of Laboratory Compacted Soils.
   c. D2419, Test Method for Sand Equivalent Value of Soils and Fine Aggregate.
   d. D4791, Test Method for Flat Particles, Elongated Particles, or Flat and Elongated Particles in Coarse Aggregate.

3. JEA Standard Specifications.

1.02 DEFINITIONS

A. Completed Course: Compacted, unyielding, free from irregularities, with smooth, tight, even surface, true to grade, line, and cross-section.

B. Completed Lift: Compacted with uniform cross-section thickness.

C. Standard Specifications: When referenced in this section, shall mean JEA Standard Specifications.

1.03 SUBMITTALS

A. Informational Submittals:

1. Certified Test Results on Source Materials: Submit copies from commercial testing laboratory 20 days prior to delivery of materials to Project showing materials meeting the physical qualities specified.

2. Certified results of in-place density tests from independent testing agency.

PART 2 PRODUCTS

2.01 BASE COURSE

A. Limerock base course shall be 8-inch minimum thickness with a minimum Limerock Bearing Ratio (LBR) of 100 compacted to 100 percent of the Modified Proctor maximum dry density (AASHTO T-180). Beneath the limerock base course, the subgrade materials shall be stabilized to a minimum LBR of 40 compacted to 100 percent of the Modified Proctor maximum dry density (AASHTO T-180).

B. Limerock for the base course shall be classified either as Ocala Formation or a Miami Oolite Formation limerock. Clean, hard durable, pit run gravel or crushed stone graded from coarse to fine containing enough fines to bind material when compacted. The minimum of carbonates of calcium and magnesium in the limerock material shall be 70 percent. The liquid limit shall not exceed 35 and the material shall be non-plastic. Limerock shall not contain cherty or other extremely hard pieces, lumps, balls or pockets of sand or clay size material in sufficient quantity as to be detrimental to the proper bonding, finishing or strength of the limerock base.

C. Priming: The prime coat shall be applied only when the base meets the specified density requirements and the moisture content in the top half of the base does not exceed 90 percent of the optimum moisture of the base material. At the time of priming, the base shall be firm, unyielding and in such condition that no undue distortion will occur.

2.02 SOURCE QUALITY CONTROL

A. Perform tests necessary to locate acceptable source of materials meeting specified requirements.

B. Final approval of aggregate material will be based on test results of installed materials.

C. Should separation of coarse from fine materials occur during processing or stockpiling, immediately change methods of handling materials to correct uniformity in grading.

PART 3 EXECUTION

3.01 SUBGRADE PREPARATION

A. As specified in Section 02202, Subgrade Preparation.

B. Obtain Engineer’s acceptance of subgrade before placing base course or surfacing material.

C. Do not place base course or surfacing materials on soft, muddy, subgrade.

3.02 EQUIPMENT

A. Compaction Equipment: Adequate in design and number to provide compaction and to obtain specified density for each layer.

3.03 HAULING AND SPREADING

A. Hauling Materials:

1. Transporting limerock shall be transported to the point where it is to be used, over rock previously placed if practicable, and dumped on the end of the preceding spread. Do not haul over surfacing in process of construction.

2. Loads: Of uniform capacity.

3. Maintain consistent gradation of material delivered; loads of widely varying gradations will be cause for rejection.

B. Spreading Materials:

1. At a minimum, distribute material to provide required density, depth, grade, and dimensions with allowance for subsequent lifts.

2. Produce even distribution of material upon roadway or prepared surface without segregation.

3. Should segregation of coarse from fine materials occur during placing, immediately change methods of handling materials to correct uniformity in grading. All segregated areas of fine or course rock shall be removed and replaced with properly graded rock.

3.04 CONSTRUCTION OF COURSES

A. Untreated Aggregate Base Course:

1. Maximum Completed Lift Thickness: 4 inches. The 8-inch base shall be constructed in two courses. The thickness of the first course shall be approximately 4 inches.

2. Completed Course Total Thickness: 8 inches.

3. Spread lift on preceding course to required cross-section.

4. Lightly blade and roll surface until thoroughly compacted.

5. Add keystone to achieve compaction and as required when aggregate does not compact readily due to lack of fines or natural cementing properties, as follows:
   a. Use leveling course or surfacing material as keystone.
   b. Spread evenly on top of base course, using spreader boxes or chip spreaders.
   c. Roll surface until keystone is worked into interstices of base course without excessive displacement.
   d. Continue operation until course has become thoroughly keyed, compacted, and will not creep or move under roller.

6. Blade or broom surface to maintain true line, grade, and cross-section.

3.05 ROLLING AND COMPACTION

A. Commence compaction of each layer of base after spreading operations and continue until density of 100 percent of Modified Proctor maximum density has been achieved as determined by AASHTO T180.

B. Roll each layer of material until material does not creep under roller before succeeding layer is applied. Areas that pump or rut excessively shall be undercut and replaced with structural fill materials and recompacted.

C. Commence rolling at outer edges and continue toward center; do not roll center of road first.

D. Apply water as needed to obtain specified densities.

E. Place and compact each lift to required density before succeeding lift is placed.

F. Surface Defects: Remedy by loosening and rerolling. Reroll entire area, including surrounding surface, until thoroughly compacted. If cracks appear in the base either before or after priming, the Construction Contractor shall remove the cracks by rescarifying, reshaping, adding base materials where necessary and recompacting.

G. Finished surface shall be true to grade and crown before proceeding with surfacing. Construction Contractor shall be responsible for assuring that that completed base course are maintained with no rutting or deteriorations and that the base meets all the requirements at the time the surface course is applied.

H. Thickness Measurement: Thickness of the base shall be measured at intervals of not more than 200 feet. Measurements shall be taken at various points on the cross section, through holes not less than 3 inches in diameter. Areas that do not meet the required thickness as called for in the plans shall be scarified and rock added to a distance of 100 feet in each direction from the edge of the deficient area. The affected area shall then be brought to the required state of compaction and to the required thickness and cross section.

3.06 SURFACE TOLERANCES

A. Blade or otherwise work surfacing as necessary to maintain grade and cross- section at all times, and to keep surface smooth and thoroughly compacted.

B. Finished Surface of Untreated Aggregate Base: Within plus or minus 0.04 foot of grade shown at any individual point.

3.07 FIELD QUALITY CONTROL

A. In-Place Density Tests:

1. Provide testing laboratory at least 24 hours advance notification prior to testing.

2. Show proof that areas meet specified requirements before identifying density test locations.

3. Density Requirements: As soon as proper conditions of moisture are attained the material shall be compacted to a density not less than 98 percent of the maximum density as determined by AASHTO T-180.

4. Refer to Table 2 for minimum sampling and testing requirements for aggregate base course and surfacing.

Table 2
Minimum Sampling and Testing Requirements

Property	Test Method	Frequency	Sampling Point
Gradation	AASHTO T11 and AASHTO T27	One sample every 500 tons but at least every 4 hours of production	Roadbed after processing
Moisture Density (Maximum Density)	AASHTO T180 Method D	One test for every aggregate grading produced	Production output or stockpile
In-Place Density and Moisture Content	AASHTO T310 and AASHTO T265 for moisture content	One for each 500 ton but at least every 10,000 sq ft of area	In-place completed, compacted area

3.08 CLEANING

A. Remove excess material from the Work area. Clean stockpile and staging areas of all excess aggregate.

END OF SECTION

THIS PAGE INTENTIONALLY LEFT BLANK

© 2019 CDM Smith
All Rights Reserved

SECTION 02750
CONCRETE PAVEMENT

PART 1 GENERAL

1.01 CONCRETE PAVEMENT

A. As specified in the latest Florida Department of Transportation Specifications, Cement Concrete Pavement – Section 350.

END OF SECTION

THIS PAGE INTENTIONALLY LEFT BLANK

© 2019 CDM Smith
All Rights Reserved

SECTION 02830
CHAIN LINK FENCES AND GATES

PART 1 GENERAL

1.01 CHAIN LINK FENCES

A. Fencing and gates shall be as specified in the JEA Water and Wastewater Standards (January 2019 or latest), Fencing – Section 492.

B. All Fencing shall be 8-feet tall with a 1-foot and 3 strand barbed wire top.

END OF SECTION

© 2019 CDM Smith
All Rights Reserved

THIS PAGE INTENTIONALLY LEFT BLANK

© 2019 CDM Smith
All Rights Reserved

SECTION 02932
SODDING AND SEEDING

1.01 SODDING

A. Grassing and Sodding shall be as specified in the JEA Water and Wastewater Standards (January 2019 or latest), Grassing – Section 441.

1.02 SEEDING

A. Seeding shall be as specified in the JEA Water and Wastewater Standards (January 2019 or latest), Grassing – Section 441.

END OF SECTION

© 2019 CDM Smith
All Rights Reserved

THIS PAGE INTENTIONALLY LEFT BLANK

© 2019 CDM Smith
All Rights Reserved

SECTION 03100
CONCRETE FORMWORK

PART 1 GENERAL

1.01 SCOPE OF WORK

A. Furnish all labor, materials, equipment and incidentals required and design, install and remove formwork for cast-in-place concrete complete as shown on the Drawings and as specified herein.

B. Secure to forms or set for embedment all miscellaneous metal items, sleeves, reglets, anchor bolts, inserts, fiberglass reinforced plastic components, hatches and other items furnished under other Sections and required to be cast into concrete.

1.02 RELATED WORK

A. Concrete reinforcement is included in Section 03200.

B. Concrete joints and joint accessories are included in Section 03250.

C. Cast-in-place concrete is included in Section 03300.

D. Concrete finishes are included in Section 03350.

E. Grout is included in Section 03600.

F. Modifications to existing concrete are included in Section 03740.

G. Concrete electrical raceway encasement is included in Division 16.

H. Miscellaneous metals are furnished under Section 05500.

I. Anchor bolts for equipment are furnished under Divisions 11, 13, 14, 15 and 16.

1.03 SUBMITTALS

A. Submit, in accordance with Section 01300, shop drawings and product data showing materials of construction and details of installation for:

1. Form release agent

2. Form ties

3. Bond breakers

4. Location and sequence of concrete placement.

B. Review will be for appearance, performance and strength of the completed structure only. Approval by the Engineer will not relieve the Construction Contractor of responsibility for the

strength, safety or correctness of methods used, the adequacy of equipment, or from carrying out the work as shown on the Drawings and as specified herein.

C. Certificates

1. Submit completed PE Certification Form for design of formwork in accordance with Section 01300. The PE Certification Form shall be completed and stamped by a professional engineer registered in the State of Florida.

2. Certify that form release agent complies with Federal, State and local VOC limitations.

1.04 REFERENCE STANDARDS

A. American Concrete Institute (ACI)

1. ACI 301 - Specifications for Structural Concrete

2. ACI 303R – Guide to Cast-in-Place Architectural Concrete Practice.

3. ACI 318 - Building Code Requirements for Structural Concrete

4. ACI 347 – Guide to Formwork for Concrete

B. APA – The Engineered Wood Association (APA)

1. Material grades and designations as specified

C. Where reference is made to one of the above standards, the revision in effect at the time of bid opening shall apply.

1.05 SYSTEM DESCRIPTION

A. Structural design responsibility: Construction Contractor shall provide all forms and shoring designed by a professional engineer registered in the State of Florida. Design and erect formwork in accordance with the requirements of ACI 301, ACI 318 and ACI 347. Comply with all applicable regulations and codes. Consider any special requirements due to the use of plasticized and/or retarded set concrete.

PART 2 PRODUCTS

2.01 GENERAL

A. The usage of a manufacturer's name and model or catalog number is for the purpose of establishing the standard of quality and general configurations desired.

2.02 MATERIALS

A. Forms, General

1. Make forms for cast-in-place concrete of wood, steel or other approved materials, except as specified in Paragraphs 2.02B and 2.02C. Construct wood forms of sound lumber or

plywood free from knotholes and loose knots. Construct steel forms to produce surfaces equivalent in smoothness and appearance to those produced by new plywood panels. Design and construct all forms to provide a flat, uniform concrete surface requiring no grinding, repairs, or finishing except as specified in Section 03350.

B. Forms for Exposed Concrete

1. Make forms for all exposed and non-submerged exterior and interior concrete of new and unused Plyform exterior grade plywood panels manufactured in compliance with the APA and bearing the APA trademark. Provide B grade or better veneer with High Density Overlay on all faces to be in contact with concrete. Design and construct all forms to provide a flat, uniform concrete surface requiring no grinding, repairs, or finishing except as specified in Section 03350.

2. Provide rigid forms that will not deflect, move, or leak. Design forms to withstand the high hydraulic pressures resulting from rapid filling of the forms and heavy high frequency vibration of the concrete. Limit deflection to 1/400 of each component span. Lay out form joints in a uniform pattern.

3. Dress and match boards. Sand plywood smooth and fit adjacent panels with tight joints. Tape, gasket, plug, and/or caulk all joints and gaps in forms to provide watertight joints that will withstand placing pressures without exceeding specified deflection limit or creating surface patterns.

4. Provide ¾-inch chamfer on all corners unless otherwise indicated.

5. Provide forms for circular structures that conform to the circular shape of the structure and where applicable the existing structure below. Straight panels may be substituted for circular panels if the straight panels do not exceed two feet in width, nor deflect more than 3-1/2 degrees per joint, nor conflict with specific notes indicated and panels conform with the existing structure below.

C. Form Release Agent. Coat all form surfaces in contact with concrete with an effective, non-staining, non-residual, water based, bond-breaking form coating unless otherwise indicated or specified. Form release agent shall not impair the bond of paint, sealant, waterproofing, dampproofing or other coatings.

D. For concrete surfaces which are to be painted, use forms with high density overlay or a similar material which does not require a form release agent unless the Construction Contractor can substantiate to the satisfaction of the Engineer that the form release agent will not remain on the formed surface after it is stripped.

E. Form Ties

1. Coil and Wire Ties: Provide ties manufactured so that, after removal of the projecting part, no metal remains within 1-1/2-in of the face of the concrete. The part of the tie to be removed shall be at least 1/2-in diameter or be provided with a plastic or wooden cone at least 1/2-in diameter and 1-1/2-in long. Provide cone washer type form ties in concrete exposed to view.

2. Flat Bar Ties for Panel Forms: Provide ties that have plastic or rubber inserts with a minimum depth of 1-1/2-in and manufactured to permit patching of the tie hole.

3. Provide ties for liquid retaining structures and exterior below grade basement walls that have a steel waterstop tightly attached to each strut or that have a neoprene rubber washer on each strut.

4. Do not use common wire for form ties.

5. Alternate form ties consisting of tapered through-bolts at least 1-in in diameter at smallest end or through-bolts that utilize a removable tapered sleeve of the same minimum size may be used. Install in forms so that large end is, where applicable, on the liquid or backfilled side of the wall. Clean, fill and seal form tie hole with non-shrink cement grout to provide watertight form tie holes and make all repairs needed to make watertight.

PART 3 EXECUTION

3.01 GENERAL

A. Provide forms for all cast-in-place concrete including sides of footings. Construct and place forms to provide concrete of the shape, lines, dimensions and appearance indicated.

B. Provide removable panels at the bottom of forms for walls and columns to allow cleaning, inspection and joint surface preparation. Provide closable intermediate inspection ports in forms for walls. Provide tremies and hoppers for placing concrete and to allow concrete sampling, prevent segregation and prevent the accumulation of hardened concrete on the forms and reinforcement above the fresh concrete.

C. Place molding, bevels, or other types of chamfer strips to produce blockouts, rustications, or chamfers as indicated on the Drawings or as specified herein. Provide chamfer strips at horizontal and vertical projecting corners to produce a 3/4-in chamfer. Provide rectangular moldings at locations requiring sealants where shown on the Drawings or specified herein.

D. Provide rigid forms to withstand construction loads and vibration and meeting specified deflection limits and tolerances. Construct forms so that the concrete will not be damaged by form removal.

E. Accessories which remain embedded in the concrete after formwork removal will be subject to the approval of the Engineer. Permanent embedments shall have sufficient concrete cover or be of suitable materials for the exposure condition as approved by the Engineer. Remove unsatisfactory embedded items at no additional cost to the Owner.

3.02 FORM TOLERANCES

A. Design, construct and surface forms in accordance with ACI 347 and meet the following additional requirements for the specified finishes.

B. Forms for Exposed Structural Concrete: Edges of all form panels in contact with concrete flush within 1/8-in and forms for plane surfaces plane within 1/8-in in 4-ft. Maximum deviation of the finished surface at any point not to exceed 1/4-in from the intended surface indicated.

Arrange form panels symmetrically and orderly to minimize the number of seams. Provide tight forms to prevent the passage of mortar, water, and grout.

C. Formed Surface Not Exposed to View or Buried: Class "C" Surface per ACI 347.

D. Formed Surface Including Mass Concrete, Pipe Encasement, Electrical Raceway Encasement and Other Similar Installations: No minimum requirements for surface irregularities and surface alignment. The overall dimensions of the concrete shall be plus or minus 1-in from the intended surface indicated.

E. Formed Surfaces to be Painted: Surface irregularities limited to 1/16-in at any point. Variation in alignment not to exceed 1/16-in per 4-ft. The maximum deviation of the finish surface at any point not to exceed 1/4-in from the intended surface indicated.

3.03 FORM PREPARATION

A. Clean, repair, remove projecting nails and fill holes, and smooth protrusions on all form surfaces to be in contact with concrete before reuse. Do not reuse forms for exposed concrete unless a "like new" condition of the form is maintained that will produce surfaces equivalent in smoothness and appearance to those produced by new plywood panels.

B. Coat wood forms in contact with concrete using form release agent prior to form installation.

C. Clean steel forms by sandblasting or other method to remove mill scale and other ferrous deposits from the contact surface of all forms. Coat steel forms in contact with concrete using form release agent prior to form installation.

3.04 REMOVAL OF FORMS

A. Be responsible for all damage resulting from removal of forms and make repairs at no additional cost to the Owner. Leave in place forms and shoring for horizontal structural members in accordance with ACI 301 and ACI 347. Conform to the requirements for form removal specified in Section 03300.

3.05 INSPECTION

A. Notify the Engineer when the forms are complete and ready for inspection, at least six working hours prior to the proposed concrete placement. The Engineer will inspect the forms to ensure overall conformance with the contract documents.

B. Failure of the forms to comply with the requirements specified, or to produce concrete complying with requirements specified shall be grounds for rejection of that portion of the concrete work. Repair or replace rejected work as directed by the Engineer at no additional cost to the Owner. Such repair or replacement shall be subject to the requirements of these Specifications and approval of the Engineer.

END OF SECTION

© 2019 CDM Smith
All Rights Reserved

THIS PAGE INTENTIONALLY LEFT BLANK

© 2019 CDM Smith
All Rights Reserved

SECTION 03200
CONCRETE REINFORCEMENT

PART 1 GENERAL

1.01 SCOPE OF WORK

A. Furnish all labor, materials, equipment and incidentals required and install all concrete reinforcement complete as shown on the Drawings and as specified herein.

1.02 RELATED WORK

A. Concrete formwork is included in Section 03100.

B. Concrete joints and joint accessories are included in Section 03250.

C. Cast-in-place concrete is included in Section 03300.

D. Grout is included in Section 03600.

E. Modifications to existing concrete are included in Section 03740.

1.03 SUBMITTALS

A. Submit, in accordance with Section 01300, shop drawings and product data showing materials of construction and details of installation for:

1. Reinforcing steel. Drawings for fabrication, bending, and placement of concrete reinforcement shall conform to the recommendations of ACI 315 for placement drawings and as specified herein.
   a. Placement drawings. For walls, show elevations from the outside, looking towards the structure, at a minimum scale of 1/4-in to one foot. For slabs, show top and bottom reinforcement on separate plan views, as needed for clarity. For beams and columns, show schedules with sections and/or elevations and stirrup/tie spacing. Show additional reinforcement around openings, at corners and at other locations indicated, diagrams of bent bars, arrangements and assemblies, all as required for the fabrication and placement of concrete reinforcement. Reference bars to the same identification marks shown on the bar bending details. Identify bars to have special coatings and/or to be of special steel or special yield strength.
   b. Bar bending details. Reference bars to the same identification marks shown on the placement drawings. Identify bars to have special coatings and/or to be of special steel or special yield strength.

2. Fiber reinforcement. Submit manufacturer's data for synthetic reinforcing fibers. Identify all placements that are to contain synthetic reinforcing fibers. The fiber length and amount of fibers per cubic yard to be used for each placement shall be noted. Submit two samples of synthetic reinforcing fibers.

B. Submit samples of each of the following items.

1. Two samples of each type of mechanical reinforcing steel coupling system.

C. Submit, in accordance with Section 01300, Test Reports of each of the following items.

1. Certified copy of mill test on each heat of each steel proposed for use showing the physical properties of the steel and the chemical analysis.

2. Welder's certification in accordance with AWS D1.4 when welding of reinforcement is indicated, specified, or approved.

1.04 REFERENCE STANDARDS

A. American Society for Testing and Materials (ASTM)

1. ASTM A82 - Standard Specification for Steel Wire, Plain, for Concrete Reinforcement.

2. ASTM A184 – Standard Specification for Welded Deformed Steel Bar Mats for Concrete Reinforcement.

3. ASTM A185 - Standard Specification for Steel Welded Wire Fabric, Plain, for Concrete Reinforcement.

4. ASTM A496 - Standard Specification for Steel Wire, Deformed, for Concrete Reinforcement.

5. ASTM A497 - Standard Specification for Steel Welded Wire Fabric, Deformed, for Concrete Reinforcement.

6. ASTM A615 - Standard Specification for Deformed and Plain Carbon-Steel Bars for Concrete Reinforcement.

7. ASTM A704 – Standard Specification for Welded Steel Plain Bar or Rod Mats for Concrete Reinforcement.

8. ASTM A706 - Standard Specification for Low-Alloy Steel Deformed and Plain Bars for Concrete Reinforcement.

B. American Concrete Institute (ACI)

1. ACI 301 - Specifications for Structural Concrete.

2. ACI 315 – Details and Detailing of Concrete Reinforcement.

3. ACI 318 - Building Code Requirements for Structural Concrete.

4. SP-66 (ACI 315) ACI Detailing Manual.

C. Concrete Reinforcing Steel Institute (CRSI)

1. Manual of Standard Practice.

D. American Welding Society (AWS)

1. AWS D1.4 Structural Welding Code - Reinforcing Steel.

E. Where reference is made to one of the above standards, the revision in effect at the time of bid opening shall apply.

1.05 QUALITY ASSURANCE

A. Fiber Reinforcement. Provide services of a manufacturer's representative, with at least 2 years experience in the use of the synthetic reinforcing fibers for a preconstruction meeting and assistance during the first placement of the material.

1.06 DELIVERY, HANDLING AND STORAGE

A. Provide reinforcement free from mill scale, rust, mud, dirt, grease, oil, ice, or other foreign matter.

B. Ship and store reinforcement with bars of the same size and shape fastened in bundles with durable tags, marked in a legible manner with waterproof markings showing the same "mark" designations as those shown on the submitted placement drawings. Tags for ASTM A706 reinforcing and for ASTM A615 reinforcing meeting the requirements of Paragraph 2.01C.1 shall indicate that the reinforcing is weldable.

C. Store reinforcement off the ground, protect from moisture and keep free from rust, mud, dirt, grease, oil, ice, or other injurious contaminants.

PART 2 PRODUCTS

2.01 MATERIALS

A. Provide new materials of domestic manufacture complying with the following material specifications.

B. Deformed Concrete Reinforcing Bars: ASTM A615, Grade 60 deformed bars.

C. Deformed Concrete Reinforcing Bars required on the Drawings to be Field Bent or Welded: ASTM A706.

1. ASTM A615, Grade 60 may be substituted for ASTM A706 subject to the following:
   a. The actual yield strength of the reinforcing steel based on mill tests does not exceed the specified yield strength by more than 18,000 psi. Retests not to exceed this value by more than an additional 3,000 psi.
   b. The ratio of the actual ultimate tensile strength to the actual tensile yield strength of the reinforcement is not less than 1.25.
   c. The carbon equivalency (CE) is 0.55 percent or less.

D. Welded Steel Wire Fabric: ASTM A185. Provide in flat sheets.

E. Welded Deformed Steel Wire Fabric: ASTM A497.

F. Welded Plain Bar Mats: ASTM A704 and ASTM A615 Grade 60 plain bars.

G. Fabricated Deformed Steel Bar Mats: ASTM A184 and ASTM A615 Grade 60 deformed bars.

H. Reinforcing Steel Accessories

1. Plastic Protected Wire Bar Supports: CRSI Bar Supports, Class 1 - Maximum Protection.

2. Stainless Steel Protected Wire Bar Supports: CRSI Bar Supports, Class 2 - Moderate Protection with legs made wholly from stainless steel wire.

3. Precast Concrete Bar Supports: CRSI Bar Supports, Precast Concrete Bar Supports. Precast concrete blocks that have equal or greater strength than the surrounding concrete.

I. Tie Wire

1. Tie Wires for Reinforcement: 16-gauge or heavier black annealed wire.

J. Mechanical Reinforcing Steel Coupling System

1. Use only where indicated. Mechanical reinforcing steel coupling system shall be positive connecting taper threaded type employing a hexagonal coupler such as Lenton rebar splices as manufactured by Erico Products Inc., Solon, OH or equal. Coupling system shall meet all ACI 318 requirements. Provide with cap on female end to exclude dirt, debris and wet concrete. Couplers shall be torqued to manufacturer's recommended value.

2. Unless otherwise noted on the Drawings, mechanical reinforcing steel coupling system shall produce a splice strength in tension or compression of not less than 125 percent of the ASTM specified minimum yield strength of the reinforcing bar. Base yield strength on Grade 60 reinforcing unless otherwise indicated or specified.

3. Compression type mechanical splices shall provide concentric bearing from one bar to the other bar.

K. Fiber Reinforcement

1. Synthetic reinforcing fibers for concrete grout shall be 100 percent polypropylene collated, fibrillated fibers, Fibermesh 300 as manufactured by Propex Concrete Systems Corp, Chattanooga, TN, or equal. Fiber length and quantity for the concrete grout mix shall be in strict compliance with the manufacturer's recommendations as approved by the Engineer.

2.02 FABRICATION

A. Comply with the CRSI Manual of Standard Practice.

B. Bend bars cold. Do not straighten or rebend bars.

C. Bend bars around a revolving collar having a diameter not less than that recommended by the CRSI or ACI 318.

D. Saw cut bar ends that are to be butt spliced, placed through limited diameter holes in metal, or threaded. Terminate saw cut ends in flat surfaces within 1-1/2 degrees of a right angle to the axis of the bar.

PART 3 EXECUTION

3.01 INSTALLATION

A. Comply with the CRSI Manual of Standard Practice for surface condition, bending, spacing and tolerances of placement for reinforcement. Provide the amount of reinforcing indicated at the spacing and clearances indicated on the Drawings.

B. Determine clear concrete cover based on exposure to the environment. Unless indicated otherwise on the Drawings, provide the following minimum clear concrete cover over reinforcement:

1. Concrete cast against and permanently exposed to earth: 3-in.

2. Concrete exposed to soil, water, sewage, sludge and/or weather:
   a. Slabs (top and bottom cover), walls: 2-in.
   b. Beams and columns (ties, spirals and stirrups): 2-in.

3. Concrete not exposed to soil, water, sewage, sludge and/or weather:
   a. Slabs (top and bottom cover), walls, joists, shells and folded plate members: 1-in.
   b. Beams and columns (ties, spirals and stirrups): 1-1/2-in.

C. Coat uncoated reinforcement which will be exposed for more than 60 days after placement with a heavy coat of neat cement slurry.

D. Do not weld reinforcing steel bars either during fabrication or erection unless indicated on the Drawings or as specified herein, or unless prior written approval has been obtained from the Engineer. Remove immediately all bars that have been welded, including tack welds, without such approval. Comply with AWS D1.4 when welding of reinforcement is shown on the Drawings, specified, or approved.

E. Reinforcing steel interfering with the location of other reinforcing steel, piping, conduits or embedded items may be moved within the specified tolerances or one bar diameter, whichever is greater. Obtain the approval of the Engineer if greater displacement of bars to avoid interference is needed. Do not cut reinforcement to install inserts, conduits, mechanical openings or other items without the prior approval of the Engineer.

F. Secure, support and tie reinforcing steel to prevent movement during concrete placement. Secure dowels in place before placing concrete.

G. Do not field bend reinforcing unless indicated or specifically authorized in writing by the Engineer. Cold-bend bars indicated or authorized to be field bent around the standard diameter spool specified in the CRSI. Do not heat bars. Closely inspect the reinforcing steel for breaks. Replace, repair by cutting out damaged bars and splicing new bars using coupling sleeves filled with ferrous material, or otherwise repair damaged reinforcing bars as directed by the Engineer

at no additional cost to the Owner. Do not bend reinforcement after it is embedded in concrete unless indicated on the Drawings.

3.02 REINFORCEMENT AROUND OPENINGS

A. Provide additional reinforcing steel on each side of the opening equivalent to one half of the cross-sectional area of the reinforcing steel interrupted by the opening unless indicated otherwise on the Drawings. Extend each end of each bar beyond the edge of the opening or penetration by the tension development length for that bar size.

3.03 SPLICING OF REINFORCEMENT

A. Provide splices as shown on the Drawings and as specified herein.

B. Splices Indicated as Compression Splices: Provide lap splice of 30 bar diameters, but not less than 12-in unless indicated otherwise on the Drawings. Base the lap splice length for column vertical bars on the bar size in the column above.

C. All Other Splices: Provide tension lap splices in compliance with ACI 318. Stagger splices in adjacent bars where possible. Provide Class B tension lap splices at all locations unless otherwise indicated.

D. Tension Members: Avoid splicing of reinforcing steel in concrete elements indicated as "tension members." However, if splices are required for constructability, splices in the reinforcement subject to direct tension shall be butted and joined with complete penetration welds to develop, in tension, at least 125 percent of the specified yield strength of the bar. Offset splices in adjacent bars the distance of a Class B splice or 30-in, whichever is greater.

E. Lap splices in welded wire fabric in accordance with the requirements of ACI 318 but not less than 12-in. Tie the spliced fabrics together with wire ties spaced not more than 24-in on center and lace with wire of the same diameter as the welded wire fabric. Offset splices in adjacent widths to prevent continuous splices.

F. Mechanical reinforcing steel coupling system shall be used only where shown on the Drawings. Offset splices in adjacent bars by at least 30 bar diameters. Mechanical reinforcing steel coupling system is only to be used for special splice and dowel conditions approved by the Engineer.

3.04 ACCESSORIES

A. Determine, provide and install accessories such as chairs, chair bars and the like to support the reinforcement providing the spacing and clearances indicated on the Drawings and prevent its displacement during the erection of the reinforcement and the placement of concrete.

B. Use precast concrete blocks where the reinforcing steel is to be supported over soil.

C. Use plastic protected bar supports or steel supports with plastic tips where the reinforcing steel is to be supported on forms for a concrete surface that will be exposed to weather, high humidity, or liquid (including bottom of slabs over liquid containing areas). Use stainless steel protected bar supports in walls, beams and elevated slabs. Use stainless steel supports or plastic

tipped metal supports in all other locations unless otherwise noted on the Drawings or specified herein.

D. Provide #5 minimum size support bars. Do not reposition upper bars in a bar mat for use as support bars.

E. Alternate methods of supporting top steel in slabs, such as steel channels supported on the bottom steel or vertical reinforcing steel fastened to the bottom and top mats, may be used if approved by the Engineer.

3.05 INSPECTION

A. Notify the Engineer when the reinforcing is complete and ready for inspection, at least six working hours prior to the proposed concrete placement. Do not cover reinforcing steel with concrete until the installation of the reinforcement, including the size, spacing and position of the reinforcement has been inspected by the Engineer and the Engineer's release to proceed with the concreting has been obtained. Keep forms open until the Engineer has completed inspection of the reinforcement.

END OF SECTION

© 2019 CDM Smith
All Rights Reserved

THIS PAGE INTENTIONALLY LEFT BLANK

© 2019 CDM Smith
All Rights Reserved

SECTION 03250
CONCRETE JOINTS AND JOINT ACCESSORIES

PART 1 GENERAL

1.01 SCOPE OF WORK

A. Furnish all labor, materials, equipment and incidentals required and install accessories for concrete joints complete as shown on the Drawings and as specified herein.

1.02 RELATED WORK

A. Concrete formwork is included in Section 03100.

B. Concrete reinforcement is included in Section 03200.

C. Cast-in-place concrete is included in Section 03300.

D. Concrete finishes are included in Section 03350.

E. Grout is included in Section 03600.

F. Modifications to existing concrete are included in Section 03740.

G. Miscellaneous metals are included in Section 05500.

1.03 SUBMITTALS

A. Submit, in accordance with Section 01300, shop drawings and product data for:

1. Premolded joint fillers: Product data including location of use, sample, catalogue cut, technical data, storage requirements, installation instructions, and conformity to ASTM standards.

2. Preformed expansion joint material: Product data including location of use, catalogue cut, dimensions, technical data, storage requirements, installation instructions, and conformity to ASTM standards.

3. Bond breaker: Product data including location of use, catalogue cut, technical data, storage requirements, and application instructions.

4. Sealant: Product data including location of use, catalogue cut, technical data, storage requirements, mixing and application instructions, and conformity to ASTM standards.

B. Certifications

1. Certify that all materials used within the joint system are compatible with each other.

2. Certify that sealant is made for use in continuous immersion.

1.04 REFERENCE STANDARDS

A. American Society for Testing and Materials (ASTM)

1. ASTM A36 – Standard Specification for Carbon Structural Steel.

2. ASTM A167 – Standard Specification for Stainless and Heat-Resisting Chromium-Nickel Steel Plate, Sheet, and Strip.

3. ASTM A283 – Standard Specification for Low and Intermediate Tensile Strength Carbon Steel Plates.

4. ASTM A615 – Standard Specification for Deformed and Plain Carbon-Steel Bars for Concrete Reinforcement.

5. ASTM A675 - Standard Specification for Steel Bars, Carbon, Hot Wrought, Special Quality, Mechanical Properties.

6. ASTM B127 - Standard Specification for Nickel-Copper Alloy (UNS NO4400) Plate, Sheet and Strip.

7. ASTM B164 - Standard Specification for Nickel-Copper Alloy Rod, Bar and Wire.

8. ASTM C309 – Standard Specification for Liquid Membrane-Forming Compounds for Curing Concrete.

9. ASTM C920 – Standard Specification for Elastomeric Joint Sealants.

10. ASTM D412 – Standard Test Methods for Vulcanized Rubber and Thermoplastic Elastomers—Tension.

11. ASTM D471 Standard Test Method for Rubber Property—Effect of Liquids.

12. ASTM D638 Standard Test Method for Tensile Properties of Plastics.

13. ASTM D746 Standard Test Method for Brittleness Temperature of Plastics and Elastomers by Impact.

14. ASTM D1752 - Standard Specification for Preformed Sponge Rubber Cork and Recycled PVC Expansion Joint Fillers for Concrete Paving and Structural Construction.

15. ASTM D2240 Standard Test Method for Rubber Property—Durometer Hardness.

B. American Association of State Highway and Transportation Officials (AASHTO)

1. Standard Specifications for Highway Bridges

C. Federal Specifications (FS)

1. FS SS-S-210A - Sealing Compound for Expansion Joints.

D. Where reference is made to one of the above standards, the revision in effect at the time of bid opening shall apply.

1.05 QUALITY ASSURANCE

A. Provide services of a manufacturer's field representative of the sealant who has performed at least five projects of similar size and complexity within the last 5 years. The field representative shall be present at the work site prior to any mixing of components to instruct on mixing, application and inspection procedures and to inspect the finish of the prepared surfaces prior to application of the sealant.

B. The manufacturer's field representative shall make at least one additional visit to the site as the work progresses and shall report on each visit to the Construction Contractor and the Engineer, advising as to whether the application is being performed in accordance with this Section and the manufacturer's printed instructions.

1.06 DELIVERY, STORAGE AND HANDLING

A. Deliver products in original, unopened containers displaying the manufacturer's label showing manufacturer name, product identification and batch number.

B. Store products as recommended by the manufacturer.

PART 2 PRODUCTS

2.01 GENERAL

A. All materials used together in a given joint shall be compatible with one another. Coordinate selection of suppliers and products to provide compatibility. Do not use asphaltic bond breakers or asphaltic joint fillers in joints receiving sealant.

2.02 MATERIALS

A. Premolded Joint Filler

1. Premolded Joint Filler – Structures: Self-expanding cork premolded joint filler conforming to ASTM D1752, Type III. Provide 1-in thickness unless otherwise indicated on the Drawings.

B. Bond Breaker

1. Bond Breaker Tape: Adhesive-backed glazed butyl or polyethylene tape which will adhere to the premolded joint filler or concrete surface. Provide tape the same width as the joint.

2. Bond breaker for concrete other than where tape is indicated on the Drawings or specified: Either bond breaker tape or a non-staining type bond prevention coating such as Crete-Lease Bond Breaker for Tilt-Up by Cresset Chemical Co.; Sure-Lift J-6 WB by Dayton Superior; Silcoseal Select by Nox-Crete, or equal.

3. Bond breaker for expansion joint dowels: Water based white pigmented curing compound conforming to ASTM C309, Type 2, Class A.

C. Preformed Expansion Joint Material

1. A non-extrudable watertight strip material used to fill expansion joints between structures. The material shall be capable of being compressed at least 40 percent for 70 hours at 68 degrees F and subsequently recovering at least 20 percent of its original thickness in the first 1/2 hour after unloading. Preformed expansion joint material shall be Phyzite 380 by Chase Construction Products, Albany, NY or equal.

D. Sealant

1. Provide sealant for joints in horizontal surfaces conforming to ASTM C920, Type S or M, Grade P or NS, Class 25. Provide sealant for joints in sloping and vertical surfaces conforming to ASTM C920, Type S or M, Grade NS, Class 25. Provide Use T sealant in pedestrian and vehicular traffic areas and Use NT in non-traffic areas.

2. Provide sealants made for use in continuous immersion. Provide gray colored sealants unless otherwise indicated on the Drawings, specified, or approved.

PART 3 EXECUTION

3.01 INSTALLATION

A. Construction Joints

1. Make construction joints only at locations shown on the Drawings or as approved by the Engineer. Any additional or relocation of construction joints proposed by the Construction Contractor must be submitted to the Engineer for written approval. Do not eliminate construction joints.

2. Locate additional or relocated joints where they least impair strength of the member. In general, locate joints within the middle third of spans of slabs, beams and girders. However, if a beam intersects a girder at the joint, offset the joint a distance equal to twice the width of the member being connected. Locate joints in walls and columns at the underside of floors, slabs, beams or girders and at tops of footings or floor slabs. Do not locate joints between beams, girders, column capitals, or drop panels and the slabs above them. Do not locate joints between brackets or haunches and walls or columns supporting them.

3. Unless indicated otherwise, provide joints perpendicular to main reinforcement. Continue reinforcing steel through the joint as indicated on the Drawings.

4. At all construction joints and at concrete joints indicated on the Drawings to be "roughened", uniformly roughen the surface of the concrete to a full amplitude (distance between high and low points and side to side) of 1/4-in with chipping tools to expose a fresh face. Thoroughly clean joint surfaces of loose or weakened materials by waterblasting or sandblasting and prepare for bonding. At least two hours before and again shortly before the new concrete is deposited, saturate the joints with water. After glistening water disappears, coat joints with neat cement slurry mixed to the consistency of very heavy paste. The surfaces shall receive a coating at least 1/8-in thick, scrubbed-in by means of stiff bristle brushes. Deposit new concrete before the neat cement dries.

5. Do not use keyways in construction joints unless specifically shown on the Drawings or approved by the Engineer.

B. Partial Contraction Joints

1. Make partial contraction joints at locations shown on the Drawings. Do not eliminate or relocate partial contraction joints.

2. Provide waterstops, sealant grooves, and sealants in wall and slab partial contraction joints in liquid retaining structures and at other locations shown on the Drawings.

3. Extend every other bar of reinforcing steel through partial contraction joints or as indicated on the Drawings. Coat the concrete surface with a bond breaker prior to placing new concrete against it as shown on the Drawings. Do not coat reinforcement or waterstops with bond breaker. Mask waterstops and reinforcing passing through the joint to prevent bond breaker form running or dripping on to them. Remove masking prior to concrete placement.

C. Sealant

1. Install sealants in clean dry recesses free of frost, oil, grease, form release agent, loose material, laitance, dirt, dust and other materials which will impair bond at the locations shown on the Drawings. Apply sealant conforming to the manufacturer's recommendations including concrete cure, temperature, moisture, mixing, primer, primer cure time, joint and recess preparation, tooling, and curing. Apply masking tape to each side of the joint prior to the installation of the sealant and remove afterwards along with any spillage to leave a sealant installation with neat straight edges.

D. Preformed Expansion Joint Material

1. Install preformed expansion joint material in conformance with the manufacturer’s recommendations; including surface preparation, adhesive installation, heat welding and set time.

END OF SECTION

© 2019 CDM Smith
All Rights Reserved

THIS PAGE INTENTIONALLY LEFT BLANK

© 2019 CDM Smith
All Rights Reserved

SECTION 03300
CAST-IN-PLACE CONCRETE

PART 1 GENERAL

1.01 SCOPE OF WORK

A. Furnish all labor, materials, equipment, and incidentals required and install cast-in-place concrete complete as shown on the Drawings and as specified herein.

B. Furnish, as required to establish concrete mixes, all sampling and laboratory testing of products and materials performed by an independent testing laboratory engaged by and at the expense of the Construction Contractor. Provide field sampling, testing, inspection and related laboratory tests.

1.02 RELATED WORK

A. Concrete formwork is included in Section 03100.

B. Concrete reinforcement is included in Section 03200.

C. Concrete joints and joint accessories are included in Section 03250.

D. Concrete finishes are included in Section 03350.

E. Grout is included in Section 03600.

F. Modifications to existing concrete are included in Section 03740.

G. Miscellaneous metals are included in Section 05500.

1.03 SUBMITTALS

A. Submit, in accordance with Section 01300, product data for:

1. Sources of cement, fly ash, aggregates, and batched concrete.

2. Air-entraining admixture. Product data including catalogue cut, technical data, storage requirements, product life, recommended dosage, temperature considerations and conformity to ASTM standards.

3. Water reducing admixture. Product data including catalogue cut, technical data, storage requirements, product life, recommended dosage, temperature considerations and conformity to ASTM standards.

4. Sheet curing material. Product data including catalogue cut, technical data and conformity to ASTM standard.

5. Material Safety Data Sheets (MSDS) for all concrete components and admixtures.

6. High-range water-reducing admixture (plasticizer). Product data including catalogue cut, technical data, storage requirements, product life, recommended dosage, temperature considerations, retarding effect, slump range and conformity to ASTM standards. Identify proposed locations of use.

7. Liquid membrane forming curing compound. Product data including catalogue cut, technical data, storage requirements, product life, application rate and conformity to ASTM standards. Identify proposed locations of use.

B. Samples

1. Fine and coarse aggregates if requested for examination by the Engineer.

C. Test Reports

1. Aggregates: Conformance to ASTM standards, including sieve analysis, mechanical properties, deleterious substance content, and mortar bar expansion test results.

2. Cement and fly ash: Conformance to ASTM standards, including chemical analysis and physical tests.

3. Concrete mixes: For each formulation of concrete proposed for use, submit constituent quantities per cubic yard, water cementitious ratio, air content, concrete slump, type and manufacturer of cement and type and manufacturer of fly ash. Provide either Paragraph a. or b., below, for each mix proposed.
   a. Standard deviation data for each proposed concrete mix based on statistical records.
   b. Provide the following for each strength data point used in the calculation of the standard deviation for determination of the minimum required average strength:
      1) Date of sampling and name of testing laboratory.
      2) Name of concrete batch plant.
      3) Water cementitious ratio.
      4) Slump of batch.
      5) Air content of batch.

4. Compressive strengths of all cylinders tested at that age in that batch.

5. If available, temperature and unit weight of batch.
   a. Provide data from projects not more strictly controlled than outlined in these specifications. Provide summary sheet showing all pertinent data and the computation of the standard deviation.
   b. Water cementitious ratio curve for concrete mixes based on laboratory tests. Provide average cylinder strength test results at 7, 14, and 28 days for laboratory concrete mix designs.

D. Certifications

1. Certify that admixtures used in the same concrete mix are compatible with each other and the aggregates.

2. Certify that the Construction Contractor is not associated with the independent testing laboratory proposed for use by the Construction Contractor nor does the Construction Contractor or officers of the Construction Contractor's organization have a beneficial interest in the laboratory.

3. Certificate of conformance for concrete production facilities from the NRMCA.

E. Qualifications

1. Independent Testing Laboratory
   a. Name and address
   b. Names and positions of principal officers and the name, position, and qualifications of the responsible registered professional engineer in charge.
   c. Listing of technical services to be provided. Indicate external technical services to be provided by other organizations.
   d. Names and qualifications of the supervising laboratory technicians.
   e. Statement of conformance provided by evaluation authority defined in ASTM C1077. Provide report prepared by evaluation authority when requested by the Engineer.
   f. Submit as required above for other organizations that will provide external technical services.

1.04 REFERENCE STANDARDS

A. American Society for Testing and Materials (ASTM)

1. ASTM C31 - Standard Practice for Making and Curing Concrete Test Specimens in the Field.

2. ASTM C33 - Standard Specification for Concrete Aggregates.

3. ASTM C39 - Standard Test Method for Compressive Strength of Cylindrical Concrete Specimens.

4. ASTM C42 - Standard Test Method for Obtaining and Testing Drilled Cores and Sawed Beams of Concrete.

5. ASTM C94 - Standard Specification for Ready-Mixed Concrete.

6. ASTM C138 – Standard Test Method for Density (Unit Weight), Yield, and Air Content (Gravimetric) of Concrete.

7. ASTM C143 - Standard Test Method for Slump of Hydraulic-Cement Concrete

8. ASTM C150 - Standard Specification for Portland Cement

9. ASTM C156 – Standard Test Method for Water Retention by Liquid Membrane-Forming Curing Compound for Concrete

10. ASTM C157 – Standard Test Method for Length Change of Hardened Hydraulic-Cement Mortar and Concrete.

11. ASTM C171 - Standard Specification for Sheet Materials for Curing Concrete

12. ASTM C173 - Standard Test Method for Air Content of Freshly Mixed Concrete by the Volumetric Method.

13. ASTM C192 – Standard Practice for Making and Curing Concrete Test Specimens in the Laboratory.

14. ASTM C231 - Standard Test Method for Air Content of Freshly Mixed Concrete by the Pressure Method.

15. ASTM C260 - Standard Specification for Air-Entraining Admixtures for Concrete.

16. ASTM C309 - Standard Specification for Liquid Membrane-Forming Compounds for Curing Concrete.

17. ASTM C311 – Standard Test Methods for Sampling and Testing Fly Ash or Natural Pozzolans for use in Portland Cement Concrete.

18. ASTM C494 – Standard Specification for Chemical Admixtures for Concrete.

19. ASTM C596 – Standard Test Method for Drying Shrinkage of Mortar Containing Hydraulic Cement.

20. ASTM C618 – Standard Specification for Coal Fly Ash and Raw or Calcined Natural Pozzolan for Use in Concrete.

21. ASTM C1017 – Standard Specification for Chemical Admixtures for use in Producing Flowing Concrete.

22. ASTM C1077 – Standard Practice for Laboratories Testing Concrete and Concrete Aggregates for Use in Construction and Criteria for Laboratory Evaluation.

23. ASTM C1218 – Standard Test Method for Water-Soluble Chloride in Mortar and Concrete.

24. ASTM C1260 – Standard Test Method for Potential Alkali Reactivity of Aggregates (Mortar-Bar Method).

25. ASTM E329 – Standard Specification for Agencies Engaged in Construction Inspection and/or Testing.

B. American Concrete Institute (ACI).

1. ACI 211.1 - Standard Practice for Selecting Proportions for Normal, Heavyweight and Mass Concrete.

2. ACI 232.2R – Use of Fly Ash in Concrete.

3. ACI 304R - Guide for Measuring, Mixing, Transporting and Placing Concrete.

4. ACI 304.2R - Placing Concrete by Pumping Methods.

5. ACI 305R - Hot Weather Concreting.

6. ACI 306R - Cold Weather Concreting.

7. ACI 318 - Building Code Requirements for Structural Concrete and Commentary.

C. National Ready Mixed Concrete Association (NRMCA)

1. Quality Control Manual, Section 3 - Certification of Ready Mixed Concrete Production Facilities.

D. Truck Mixer Manufacturers Bureau (TMMB)

1. TMMB 100 - Truck Mixer, Agitator and Front Discharge Concrete Carrier Standards.

E. Where reference is made to one of the above standards, the revision in effect at the time of bid opening shall apply.

1.05 QUALITY ASSURANCE

A. Comply with ACI 318 and other stated specifications, codes and standards. Apply the most stringent requirements of other stated specifications, codes, standards, and this Section when conflicts exist.

B. Independent testing laboratory shall meet the requirements of ASTM E329 and ASTM C1077 and be acceptable to the Engineer. Laboratories affiliated with the Construction Contractor or in which the Construction Contractor or officers of the Construction Contractor's organization have a beneficial interest are not acceptable.

C. Use only one source of cement and aggregates for the project. Provide concrete uniform in color and appearance.

D. At least ten working days before the first concrete placement hold a preconstruction meeting to review the requirements for concrete placement, waterstop placement, jointing, concrete curing, hot weather concreting, cold weather concreting and finishing. Review, with the attendance of the plasticizer manufacturer, the properties and techniques of batching and placing concrete containing high-range water-reducing admixture. Notify all parties involved, including the Engineer, of the meeting at least ten working days prior to its scheduled date. Prepare an agenda for the meeting. Take meeting minutes and distribute to all attendees.

E. If, during the progress of the work, it is impossible to secure concrete of the specified workability and strength with the materials being furnished, the Engineer may order such changes in proportions or materials, or both, as may be necessary to secure the specified properties. Make all changes so ordered at no additional cost to the Owner.

F. If, during the progress of the work, the materials from the sources originally accepted change in characteristics, make, at no additional cost to the Owner, new acceptance tests of materials and establish new concrete mixes with the assistance of an independent testing laboratory.

G. Provide all field testing and inspection services and related laboratory tests. Methods of testing shall comply with the latest applicable ASTM methods. The following items shall be tested to verify conformity with this Section.

1. Concrete placements - compressive strength (cylinders), compressive strength (cores), temperature, slump, and air content.

2. Other materials that may require field testing.

H. Provide laboratory tests of samples of constituents and of concrete as-placed. All materials incorporated in the work shall conform to accepted samples.

1.06 DELIVERY, STORAGE AND HANDLING

A. Cement: Store in weathertight buildings, bins or silos to provide protection from dampness and contamination and to prevent warehouse set.

B. Aggregate: Arrange and use stockpiles to prevent segregation or contamination with other materials or with other sizes of like aggregates. Build stockpiles in successive horizontal layers not exceeding three feet in thickness. Complete each layer before the next is started. Do not use frozen or partially frozen aggregate.

C. Sand: Arrange and use stockpiles to prevent contamination. Allow sand to drain to a uniform moisture content before using. Do not use frozen or partially frozen sand.

D. Admixtures: Store in closed containers to prevent contamination, evaporation or damage. Provide agitating equipment to uniformly disperse ingredients in admixture solutions which tend to separate. Protect liquid admixtures from freezing and other temperature changes which could adversely affect their characteristics.

E. Fly Ash: Store in weathertight buildings, bins or silos to provide protection from dampness and contamination.

F. Sheet Curing Materials: Store in weathertight buildings or off the ground and under cover.

G. Liquid Membrane Forming Curing Compounds: Store in closed containers.

PART 2 PRODUCTS

2.01 GENERAL

A. The use of manufacturer's name and model or catalog number is for the purpose of establishing the standard of quality and general configuration desired.

B. Like items of materials shall be the end products of one manufacturer in order to provide standardization for appearance, maintenance and manufacturer's service.

2.02 MATERIALS

A. Materials shall comply with this Section and any applicable State or local requirements.

B. Cement: Domestic portland cement conforming to ASTM C150. Cement shall be low alkali cement. Do not use air entraining cements. Cement brand must be approved by the Engineer and one brand shall be used throughout the work. Provide the following type(s) of cement:

1. Class A Concrete - Type II with the addition of fly ash resulting in C_3A being below 8 percent of total cementitious content, Type III limited to 8 percent C_3A.

2. Class E Concrete - Type II with the addition of fly ash resulting in C_3A being below 5 percent of total cementitious content, Type III limited to 5 percent C_3A or Type V.

C. Aggregates:

1. Fine Aggregate: Washed inert natural sand conforming to ASTM C33.

2. Coarse Aggregate: Well-graded crushed stone or washed gravel conforming to ASTM C33. Grading requirements as listed in ASTM C33, Table 2 for the specified coarse aggregate size number listed in Table 1 herein. Limits of deleterious substances and physical property requirements as listed in ASTM C33, Table 3 for severe weathering regions. Do not use coarse aggregates known to be deleteriously reactive with alkalis in cement.

3. The fine and coarse aggregates used shall not cause expansion of mortar bars greater than 0.1 percent in 16 days when tested in accordance with ASTM C1260 and using the cement proposed for the project. If aggregates proposed for use do not meet this requirement, then satisfy either a. or b. below.
   a. Total equivalent alkali content of the cement used shall not exceed 0.60 percent as provided in the Optional Chemical Requirements of ASTM C150.
   b. The fine and coarse aggregates used shall not cause expansion of mortar bars greater than 0.1 percent in 16 days when tested in accordance with ASTM C1260 and using the cement and fly ash proposed for the project. The proportions of the cement-fly ash mix shall be the same as those proposed for the project.

D. Water: Potable water free of oil, acid, alkali, salts, chlorides (except those attributable to drinking water), organic matter, or other deleterious substances.

E. Admixtures: Use admixtures free of chlorides and alkalis (except for those attributable to drinking water). The admixtures shall be from the same manufacturer when it is required to use more than one admixture in the same concrete mix. Use admixtures compatible with the concrete mix including other admixtures.

1. Air Entraining Admixture: Conforming to ASTM C260. Proportion and mix in accordance with manufacturer's recommendations.

2. Water Reducing Admixture: Conforming to ASTM C494, Type A. Proportion and mix in accordance with manufacturer's recommendations.

3. High-Range Water-Reducing Admixtures (Plasticizer): Conforming to ASTM C494, Type F or ASTM C1017, Type I resulting in non-segregating plasticized concrete with little bleeding and with the physical properties of low water/cementitious ratio concrete. The

treated concrete shall be capable of maintaining its plastic state in excess of 2 hours. Proportion and mix in accordance with manufacturer's recommendations.

4. Do not use admixtures causing retarded or accelerated setting of concrete without written approval from the Engineer. Use retarding or accelerating water reducing admixtures when so approved.

F. Fly Ash: Class F fly ash complying with ASTM C618, including the requirements of Table 1 but with the Loss on Ignition (LOI) limited to 3 percent maximum and the optional physical requirements of Table 3. Test in compliance with ASTM C311 with a minimum of one sample weighing four pounds taken from each 200 tons of fly ash supplied for the project.

G. Sheet Curing Materials: Waterproof paper, polyethylene film or white burlap-polyethylene sheeting, all conforming to ASTM C171.

H. Liquid Membrane-Forming Curing Compound. Compound conforming to ASTM C309, Type 1-D (clear or translucent with fugitive dye) and containing no wax, paraffin, or oil. Curing compounds shall be non-yellowing and have a unit moisture loss no greater than 0.039 gm/cm^2 at 72 hours as measured by ASTM C156. Curing compound shall comply with Federal, State and local VOC limits.

2.03 MIXES

A. An independent testing laboratory engaged by and at the expense of the Construction Contractor shall establish concrete mixes and perform all sampling and laboratory testing of products and materials.

B. Select proportions of ingredients to meet the design strength and materials limits specified in Table 1 and to produce placeable, durable concrete conforming to these specifications. Proportion ingredients to produce a homogenous mixture which will readily work into corners and angles of forms and around reinforcement without permitting materials to segregate or allowing free water to collect on the surface.

C. Base concrete mixes on standard deviation data of prior mixes with essentially the same proportions of the same constituents or, if not available, develop concrete mixes by laboratory tests using the materials proposed for the work.

1. For concrete mixes based on standard deviation data of prior mixes, submit standard deviation data of prior mixes with essentially the same proportions of the same constituents in accordance with ACI 318 as applicable and based on the modification factors for standard deviation tests contained in ACI 318.

2. For concrete mixes developed by laboratory testing, base cementitious content of the concrete on curves showing the relation between water cementitious ratio and 7, 14 and 28 day compressive strengths of concrete made using the proposed materials. Determine curves by four or more points, each representing an average value of at least three test specimens and one water-cementitious ratio at each age. Provide curves with a range of values sufficient to yield the desired data, including the compressive strengths specified, without extrapolation. The cementitious content of the concrete mixes to be used, as determined from the curve, shall correspond to the required average compressive strength

in Table 5.3.2.2 of ACI 318. The resulting mix shall not conflict with the limiting values for maximum water cementitious ratio and net minimum cementitious content specified in Table 1.

D. Test the fly ash and concrete mixture to provide test data confirming that the fly ash in combination with the cement to be used meets all strength requirements and is compatible with the other concrete additives.

E. Test aggregates for potential alkali reactivity in accordance with ASTM C1260. If initial testing indicates aggregates are not potentially reactive repeat test at 3 month intervals.

F. Compression Tests: Provide testing of the proposed concrete mixes to demonstrate compliance with the compression strength requirements in conformity with the provisions of ACI 318.

G. Entrained air, as measured by ASTM C231, shall be as shown in Table 1.

1. If the air entraining agent proposed for use in the mix requires testing methods other than ASTM C231 to accurately determine air content, make special note of this requirement in the admixture submittal specified under Paragraph 1.03.

H. Slump of the concrete as measured by ASTM C143, shall be as shown in Table 1. If a high-range water-reducing admixture (plasticizer) is used, the slump indicated shall be that measured before plasticizer is added. Plasticized concrete shall have a slump ranging from 7 to 10-in.

1. Proportion admixtures according to the manufacturer's recommendations. Two or more admixtures specified may be used in the same mix provided that the admixtures in combination retain full efficiency and have no deleterious effect on the concrete or on the properties of the other admixture(s).

TABLE 1

Class	Design Strength 1	Cement 2	Fine Aggregate 3	Coarse Aggregate 3	Cementitious Content 4
A	2500	Type II	Sand	57	440
E1	4500	Type II	Sand	57	580
E2	4500	Type II	Sand	67	610

Class	W/C Ratio 5	Fly Ash 6	AE Range 7	WR 8	HRWR 9	Slump Range Inches
A	0.62 max.	Yes	3.5 to 5	Yes	No	1-4
E1	0.42 max.	Yes	3.5 to 5	Yes	ALLOWED	3-5
E2	0.42 max.	Yes	3.5 to 5	Yes	ALLOWED	3-5

NOTES:
1. Minimum compressive strength in psi at 28 days
2. ASTM designation in ASTM C150
3. Size Number in ASTM C33

4. Minimum cementitious content in lbs per cubic yard (where fly ash is used cementitious content is defined as cement content plus fly ash content)
5. W/C is Maximum Water Cementitious ratio by weight
6. Fly ash content in the range of 20-25 percent of the total cement content plus fly ash content, by weight
7. AE is percent air entrainment
8. WR is water reducing admixture
9. HRWR is high-range water-reducing admixture

PART 3 EXECUTION

3.01 MEASURING MATERIALS

A. Provide concrete composed of portland cement, fly ash, fine aggregate, coarse aggregate, water and admixtures as specified and produced by a plant complying with ACI 318 and ASTM C94. Batch all constituents, including admixtures, at the plant. High-range water reducing admixtures may be added in the field.

B. Measure materials for batching concrete by weighing in conformity with and within the tolerances given in ASTM C94 except as otherwise specified. Use scales last certified by the local Sealer of Weights and Measures within one year of use.

C. Weigh cement and fly ash in individual weigh batchers that are separate and distinct from the weigh batchers used for other materials. When cement and fly ash are weighed in a cumulative weigh batcher, the cement shall be weighed first.

D. Measure the amount of free water in fine aggregates within 0.5 percent with a moisture meter. Compensate for varying moisture contents of fine aggregates. Record the number of gallons of water as-batched on printed batch tickets.

E. Dispense admixtures either manually using calibrated containers or measuring tanks, or by means of an automatic dispenser approved by the manufacturer of the specific admixture.

1. Charge air-entraining and chemical admixtures into the mixer as a solution using an automatic dispenser or similar metering device.

2. Inject multiple admixtures separately during the batching sequence.

3.02 MIXING AND TRANSPORTING

A. Provide ready-mixed concrete produced by equipment complying with ACI 318 and ASTM C94 and produced by a plant certified by the NRMCA. Do not hand-mix. All truck mixers shall carry a rating plate conforming to TMMB 100. Clean each transit mix truck drum and reverse drum rotation before the truck proceeds under the batching plant. Equip each transit-mix truck with a continuous, nonreversible, revolution counter showing the number of revolutions at mixing speeds.

B. Transport ready-mix concrete to the site in watertight agitator or mixer trucks loaded not in excess of their rated capacities as stated on the name plate.

C. Keep the water tank valve on each transit truck locked at all times. Any addition of water must be directed by the Engineer. Incorporate water directed to be added by additional mixing of at least 50 revolutions at mixing speed after the addition of all water. Meter all added water and show the amount of water added on each delivery ticket.

D. Comply with ACI 318 and ASTM C94 for all central plant and rolling stock equipment and methods.

E. Select equipment of size and design to provide continuous flow of concrete at the delivery end. Use metal or metal-lined non-aluminum discharge chutes with slopes not exceeding one vertical to two horizontal and not less than one vertical to three horizontal. Chutes more than 20-ft long and chutes not meeting slope requirements may be used if concrete is discharged into a hopper before distribution.

F. Do not retemper (mix with or without additional cement, aggregate, or water) concrete or mortar which has partially hardened.

G. Handle concrete from mixer to placement providing concrete of specified quality in the placement area and not exceeding the maximum time interval specified in Paragraph 3.02 I.4. Dispatch trucks from the batching plant so they arrive at the work site just before the concrete is required to avoid excessive mixing of concrete while waiting or delays in placing successive layers of concrete in the forms. Remix for a minimum of 5 minutes prior to discharge or testing.

H. Furnish a delivery ticket for ready mixed concrete to the Engineer as each truck arrives. Provide a printed record of the weight of cement and each aggregate as batched individually on each ticket. Use the type of indicator that returns for zero punch or returns to zero after a batch is discharged. Indicate for each batch the weight of fine and coarse aggregate, cement, fly ash, and water, moisture content of fine and coarse aggregate at time of batching, and types, brand and quantity of each admixture, the quantity of concrete delivered, the time any water is added and the amount, and the numerical sequence of the delivery. Show the time of day batched and time of discharge from the truck. Indicate the number of revolutions of transit mix truck.

I. Temperature and Mixing Time Control

1. In cold weather (see Paragraph 3.07D) maintain the as-mixed temperature of the concrete and concrete temperatures at the time of placement in the forms as indicated in Table 3.

2. If water or aggregate has been heated, combine water with aggregate in the mixer before cement is added. Do not add cement to mixtures of water and aggregate when the temperature of the mixture is greater than 90 degrees F.

3. In hot weather (see Paragraph 3.07E), cool ingredients before mixing to maintain temperature of the concrete below the maximum placing temperature of 90 degrees F. Well-crushed ice may be substituted for all or part of the mixing water.

4. The maximum time interval between the addition of mixing water and/or cement to the batch and the final placing of concrete in the forms shall not exceed the following:

TABLE 2

AIR OR CONCRETE TEMPERATURE (WHICHEVER IS HIGHER)	MAXIMUM TIME
(27 Degree C) 80 Degree F to 90 Degree F (32 Degree C)	45 minutes
(21 Degree C) 70 Degree F to 79 Degree F (26 Degree C)	60 minutes
(5 Degree C) 40 Degree F to 69 Degree F (20 Degree C)	90 minutes

If an approved high-range water-reducing admixture (plasticizer) is used to produce plasticized concrete, the maximum time interval shall not exceed 90 minutes.

3.03 INSPECTION AND COORDINATION

A. Batching, mixing, transporting, placing and curing of concrete shall be subject to the inspection of the Engineer at all times. Advise the Engineer of readiness to proceed at least six working hours prior to each concrete placement. The Engineer will inspect the preparations for concreting including the preparation of previously placed concrete, the reinforcing and the alignment, cleanliness and tightness of formwork. Do not place concrete without the inspection and acceptance of the Engineer.

3.04 EMBEDDED ITEMS

A. Secure to forms as required or set for embedment as required, all miscellaneous metal items, sleeves, reglets, anchor bolts, anchors, inserts and other items furnished under other Sections and required to be embedded into concrete. Set and secure such items in the locations and alignments needed so they are not displaced by concrete placement.

B. Clean embedded items free of rust, mud, dirt, grease, oil, ice, or other contaminants which would reduce or prevent bonding with concrete.

C. Coat or isolate all aluminum embedments to prevent aluminum-concrete reaction or electrolytic action between aluminum and steel.

D. Do not embed piping in concrete unless shown on the Drawings or approved by the engineer.

E. Do not embed electrical conduits in concrete unless shown on the Drawings or approved by the engineer.

F. Pipes and conduits embedded within a slab or wall (other than those merely passing through) shall satisfy the following, unless otherwise shown on the Drawings or approved:

1. Maximum outside dimension of pipe or conduit shall not be greater than one third the overall thickness of the slab or wall.

2. Spacing of pipes or conduits shall be greater than or equal to three diameters or widths on center.

3. Fabricate piping and conduit such that the cutting, bending, or relocation of reinforcing steel is not required.

4. Close open ends of piping, conduits, and sleeves embedded in concrete with caps or plugs prior to placing concrete.

G. Ensure all specified tests and inspections on embedded piping are completed and satisfactory before starting concrete placement. Ensure all mechanical or electrical tests and inspections are completed and satisfactory prior to starting concrete placement. Do not place concrete until unsatisfactory items and conditions have been corrected.

H. Position embedded anchor bolts using templates.

I. Check location, alignment, and support of anchor bolts, piping, electrical conduits, and other items which will be fully or partially embedded in concrete before depositing concrete. Correct mislocated and misaligned items and secure items which have become loose before depositing concrete.

J. Correct all embedded items not installed in the location or alignment needed or displaced by concrete placement at no additional cost to the Owner.

3.05 CONCRETE APPEARANCE

A. Remix concrete showing either poor cohesion or poor coating of the coarse aggregate with paste. Reject remixed concrete showing either poor cohesion or poor coating of the coarse aggregate with paste. Make, at no additional cost to the Owner, changes in the concrete mix design for future deliveries only by adjusting one or more of the following if the slump is within the allowable limit, but excessive bleeding, poor workability, or poor finishability are observed:

1. The gradation of aggregate.

2. The proportion of fine and coarse aggregate.

3. The percentage of entrained air, within the allowable limits.

B. Provide concrete having a homogeneous structure which, when hardened, will have the specified strength, durability and appearance. Provide mixtures and workmanship such that concrete surfaces, when exposed, will require no finishing except as specified in Section 03350.

3.06 PLACING AND COMPACTING

A. Placing

1. Verify that all formwork completely encloses concrete to be placed and is securely braced prior to concrete placement. Remove ice, standing water, dirt, debris, and other foreign materials from forms and exposed joint surfaces. Confirm that reinforcement and other embedded items are securely in place. Have a worker at the location of the placement who can check that reinforcement and embedded items remain in designated locations and alignments while concrete is being placed. Sprinkle semi-porous subgrades or forms to eliminate suction of water from the mix. Do not place concrete on frozen subgrade, snow, or ice.

2. Deposit concrete as near its final position as possible to prevent segregation due to rehandling or flowing. Place concrete continuously at a rate that allows the concrete previously placed to be integrated with fresh plastic concrete. Do not deposit concrete which has partially hardened or has been contaminated by foreign materials or on concrete which has hardened sufficiently to cause formation of seams or planes of weakness within the section. If the section cannot be placed continuously, place construction joints as specified or as approved.

3. Pumping of concrete will be permitted. Use a mix design and aggregate sizes chosen for pumping and submit for approval. Do not use pipelines made of aluminum or aluminum alloy. When concrete is pumped, slump will be determined at point of truck discharge and air content will be determined at point of placement.

4. Remove temporary spreaders from forms when the spreader is no longer needed. Temporary spreaders may remain embedded in concrete only when made of galvanized steel or concrete and if prior approval has been obtained.

5. Do not place concrete for supported elements until concrete previously placed in the supporting element has attained design strength.

6. Where surface mortar is to form the base of a finish, especially surfaces designated to be painted, work coarse aggregate back from forms to bring the full surface of the mortar against the form. Prevent the formation of surface voids.

7. Slabs
   a. After bulkheads, screeds and jointing materials have been positioned, place concrete continuously between joints beginning at a bulkhead, edgeform, or corner. Place each batch into the edge of the previously placed concrete to avoid stone pockets and segregation.
   b. Avoid delays in placement. If there is a delay in placement, spade and consolidate the concrete placed after the delay at the edge of the previously placed concrete to avoid cold joints. Bring concrete to correct level and strike off with a straightedge. Use bullfloats or darbies to smooth the surface, leaving it free of humps or hollows.
   c. Where slabs are to be placed integrally with the walls below them, place the walls and compact as specified. Allow one hour to pass between placement of the wall and the overlying slab to permit consolidation of the wall concrete. Keep the top surface of the wall moist to prevent cold joints.

8. Formed Concrete
   a. Place concrete in forms using tremie tubes taking care to prevent segregation. Maintain bottom of tremie tubes in contact with the concrete already placed. Do not permit concrete to drop freely more than 4-ft. Place concrete for walls in 12-in to 24-in lifts, keeping the surface horizontal. If a high-range water-reducing admixture is used do not permit concrete to drop freely more than 8-ft; maximum lift thickness not to exceed 4-ft.

9. Bollards
   a. Conform to requirements specified above for formed concrete and completely fill pipe with concrete as indicated.

10. Underwater Concreting
    a. Use the tremie system conforming with the recommendations of ACI 304R. Tremie pipes shall be in the range of 8 to 12-in in diameter and be spaced at not more than 16-ft on centers nor more than 8-ft from an end form. Where concrete is being placed around a pipe, there shall be at least one tremie pipe on each side of each pipe. Where the tremie system is not practical, direct pumped concrete for underwater placement may be used subject to approval by the Engineer.

11. Do not place concrete underwater unless approved in writing by the Engineer.

B. Compacting

1. Consolidate concrete by vibration and puddling, spading, rodding or forking so that concrete is completely worked around reinforcement, embedded items and openings and into corners of forms. Continuously perform puddling, spading, rodding and forking along with vibration of the placement to eliminate air or stone pockets which may cause honeycombing, pitting or planes of weakness.

2. Compact all concrete with mechanical vibrators. Do not order concrete until vibrators (including standby units in working order) are on the job.

3. Use mechanical vibrators having a minimum frequency of 8000 vibrations per minute. Insert vibrators and withdraw at points from 18-in to 30-in apart. Vibrate sufficiently at each insertion to consolidate concrete, generally from 5 to 15 seconds. Do not over vibrate so as to segregate. Keep standby vibrators on the site during concrete placing operations.

4. Concrete Slabs: Vibration for concrete slabs less than 8-in thick shall be by vibrating screeds. Vibration for concrete slabs 8-in and thicker shall be by internal vibrators and (optionally) with vibrating screeds. Place vibrators into concrete vertically. Do not lay vibrators horizontally or lay over.

5. Walls and Columns: Use internal vibrators (rather than form vibrators) unless otherwise approved by the Engineer. In general, for each vibrator needed to melt down (level) the batch at the point of discharge, one or more additional vibrators must be used to densify, homogenize and perfect the surface. Insert vibrators vertically at regular intervals, through the fresh concrete and slightly into the previous lift, if any.

6. Amount of Vibration: Use vibrators to consolidate properly placed concrete. Do not use vibrators to move or transport concrete in the forms. Continue vibration until:
    a. Frequency of vibrator returns to normal.
    b. Surface appears liquefied, flattened and glistening.
    c. Trapped air ceases to rise.
    d. Coarse aggregate has blended into surface, but has not disappeared.

3.07 CURING AND PROTECTION

A. Protect all concrete work against injury from the elements and defacements of any nature during construction operations.

B. Curing Methods

1. Curing Methods for Concrete Surfaces: Cure concrete to retain moisture and maintain a temperature of at least 50 Degrees F at the concrete surface for a minimum of seven days after placement. Use the following curing methods as specified:
   a. Water Curing: Keep entire concrete surface wet by ponding, continuous sprinkling or covered with saturated burlap. Begin water curing as soon as concrete attains an initial set and maintain water curing 24 hours a day. Do not permit the surface of the concrete to dry out at any time during the curing period. Temperature of curing water shall be within 20 Degrees F of the concrete temperature.
   b. Sheet Material Curing: Cover entire surface with sheet material. Anchor sheeting to prevent wind and air from lifting the sheeting or entrapping air under the sheet. Place and secure sheet as soon as initial concrete set occurs.
   c. Liquid Membrane Curing: Apply over the entire concrete surface except as follows. Curing compound shall NOT be placed on any concrete surface where additional concrete or grout is to be placed, where concrete sealers or surface coatings are to be used, or where the concrete finish requires an integral floor product. Apply curing compound as soon as the free water on the surface has disappeared and no water sheen is visible, but not after the concrete is dry or when the curing compound can be absorbed into the concrete. Apply in compliance with the manufacturer's recommendations.

2. Specified applications of curing methods:
   a. Slabs for Liquid Retaining Structures: Water curing only.
   b. Slabs on Grade and Footings (not used to retain liquids): Water curing or sheet material curing or liquid membrane curing.
   c. Structural Slabs (other than Liquid Retaining Structures): Water curing or liquid membrane curing.
   d. Horizontal Surfaces which will Receive Additional Concrete, Coatings, Grout or Other Material that Requires Bond to the substrate: Water curing.
   e. Formed Surfaces: None if nonabsorbent forms are left in place seven days. Water curing if absorbent forms are used. Water curing if forms are removed prior to seven days. Sheet cure or liquid membrane cure if forms are removed prior to seven days. Exposed horizontal surfaces of formed walls or columns shall be water cured for seven days or until next placement of concrete is made.
   f. Surfaces of Concrete Joints: Water curing or sheet material curing.

3. Curing time may be reduced to 3 days for concrete placement using Type III cement when approved by the Engineer.

C. Protect finished surfaces and slabs from the direct rays of the sun to prevent checking and crazing.

D. Cold Weather Concreting

1. For this Specification, "cold weather" is defined as a period when for more than three successive days, the average daily outdoor temperature drops below 40 degrees F. Calculate average daily temperature as the average of the highest and the lowest temperature during the period from midnight to midnight.

2. Batch, deliver, place, cure and protect concrete during cold weather in compliance with the recommendations of ACI 306R and the additional requirements of this Section.

3. Review the cold weather concreting plan at the preconstruction meeting. Include the methods and procedures for use during cold weather including the production, transportation, placement, protection, curing and temperature monitoring of the concrete and the procedures to be implemented upon abrupt changes in weather conditions or equipment failures.

4. The minimum temperature of concrete immediately after placement and during the protection period shall be as indicated in Table 3. The temperature of the concrete in place and during the protection period shall not exceed these values by more than 20 degrees F. Prevent overheating and non-uniform heating of the concrete.

TABLE 3

Concrete Temperatures
Minimum Dimension of Section

	< 12-in	12 to 36-in
Min. conc temp:	55 Degree F	50 Degree F

5. Protect concrete during periods of cold weather to provide continuous warm, moist curing (with supplementary heat when required by weather conditions) for a total of at least 350 degree-days of curing.
   a. Degree-days are defined as the total number of 24 hour periods multiplied by the weighted average daily air temperature at the surface of the concrete (e.g., 7 days at an average 50 degrees F = 350 degree-days).
   b. To calculate the weighted average daily air temperature, sum hourly measurements of the air temperature in the shade at the surface of the concrete taking any measurement less than 50 degrees F as 0 degrees F. Divide the sum thus calculated by 24 to obtain the weighted average temperature for that day.

6. Do not use salt, manure or other chemicals for protection.

7. At the end of the protection period, allow the concrete to cool gradually to the ambient temperature. If water curing has been used, do not expose concrete to temperatures below those shown in Table 3 until at least 24 hours after water curing has been terminated and air dry concrete for at least 3 days prior to first exposure to freezing temperatures.

8. During periods not defined as cold weather, but when freezing temperatures are expected or occur, protect concrete surfaces from freezing for the first 24 hours after placing.

E. Hot Weather Concreting

1. For this Specification, "hot weather" is defined as any combination of high air temperatures, low relative humidity and wind velocity which produces a rate of evaporation as estimated in ACI 305R, approaching or exceeding 0.2 pounds per square foot per hour (lb/sq ft/hr).

2. Batch, deliver, place, cure and protect concrete during hot weather in compliance with the recommendations of ACI 305R and the additional requirements of this Section.

a. Temperature of concrete being placed shall not exceed 90 degrees F. Maintain a uniform concrete mix temperature below this level. The temperature of the concrete shall not cause loss of slump, flash set or cold joints.
b. Promptly deliver concrete to the site and promptly place the concrete upon its arrival at the site, not exceeding the maximum time interval specified in Paragraph 3.02I.4. Provide vibration immediately after placement.
c. The Engineer may direct the Construction Contractor to immediately cover concrete with sheet curing material.

3. Review the hot weather concreting plan at the preconstruction meeting. Include the methods and procedures for use during hot weather including production, placement, and curing.

3.08 REMOVAL OF FORMS

A. Do not remove forms before the concrete has attained a strength of at least 70 percent of its specified design strength for beams and slabs and at least 30 percent of its specified design strength for walls and vertical surfaces, nor before reaching the following number of day-degrees of curing (whichever is the longer):

TABLE 4

Forms for	Degree Days
Beams and slabs	500
Walls and vertical surfaces	100

(See definition of degree-days in Paragraph 3.07D).

B. Do not remove shores until the concrete has attained at least 70 percent of its specified design strength and also sufficient strength to support safely its own weight and the construction live loads upon it.

C. In cold weather, when temperature of concrete exceeds ambient air temperature by 20 Degrees F at the end of the protection period, loosen forms and leave in place for at least 24 hours to allow concrete to cool gradually to ambient air temperature.

3.09 FIELD AND LABORATORY TESTS

A. Take field control cylinder specimens during the progress of the work, in compliance with ASTM C31. The number of sets of concrete test cylinders taken of each class of concrete placed each day shall not be less than one set per day, nor less than one set for each 100 cu yds of concrete nor less than one set for each 5,000 sq ft of surface area for slabs or walls. Specimens shall be formed in 6-in diameter by 12-in long non-absorbent cylindrical molds.

1. A "set" of test cylinders shall consist of five cylinders: one to be tested at seven days, one to be tested at 14 days, and two to be tested and their strengths averaged at 28 days. The fifth may be used for a special test at 3 days or to verify strength after 28 days if 28 day test results are low.

2. When the average 28 day compressive strength of the cylinders in any set falls below the required compressive strength or below proportional minimum seven-day or 14-day strengths (where proper relation between seven, 14 and 28 day strengths have been established by tests), change proportions, cementitious content, or temperature conditions to achieve the required strengths at no additional cost to the Owner.

B. Provide four firmly braced, insulated, heated, closed wooden curing boxes, each sized to hold ten specimens, complete with cold weather temperature and hot weather temperature control thermostat for initial curing and storage from time of fabrication until shipment to the testing lab. Protect the specimens against injury or loss through construction operations. Furnish material and labor required for the purpose of taking concrete cylinder samples.

C. Test slump immediately prior to placing the concrete. Test shall be made in accordance with ASTM C143. When concrete is pumped, slump will be determined at point of truck discharge. If the slump is outside the specified range, the concrete will be rejected.

D. Test for air content shall be conducted on a fresh concrete sample. Air content for concrete made of ordinary aggregates having low absorption shall be made in compliance with either the pressure method complying with ASTM C231 or by the volumetric method complying with ASTM C173. If aggregates with high absorptions are used, the latter test method shall be used. When concrete is pumped, air content will be determined at point of placement.

3.10 FIELD CONTROL

A. The Engineer may have cores taken from any questionable area in the concrete work such as construction joints and other locations as required for determination of concrete quality. The results of tests on such cores shall be the basis for acceptance, rejection or determining the continuation of concrete work. The right of the Engineer to take such cores shall not be construed as creating any obligation to take such cores, and not exercising this right to do so shall not relieve the Construction Contractor from meeting the requirements of these Specifications.

B. Cooperate in obtaining cores by allowing free access to the work and permitting the use of ladders, scaffolding and such incidental equipment as may be required. Repair all core holes with non-shrink grout as specified in Section 03600. The work of cutting, testing and repairing the cores will be at the expense of the Construction Contractor if defective work is uncovered. If no defective work is found, such cost will be at the expense of the Owner.

3.11 FAILURE TO MEET REQUIREMENTS

A. Should the strengths shown by the test specimens made and tested in compliance with the previous provisions fall below the values given in Table 1, the Engineer may require changes in proportions or materials, or both, to apply to the remainder of the work in accordance with Paragraph 1.05E. Furthermore, the Engineer may require additional curing on those portions of the structure represented by the test specimens which fall below the values given in Table 1. The cost of such additional curing shall be at no additional cost to the Owner. In the event that such additional curing does not give the strength required, as evidenced by core and/or load tests, the Engineer may require strengthening or replacement of those portions of the structure which fail to develop the required strength. Coring and testing and/or load tests and any strengthening or concrete replacement required because strengths of test specimens are below

that specified, shall be at no additional cost to the Owner. In such cases of failure to meet strength requirements the Construction Contractor and Owner shall confer to determine what adjustment, if any, can be made in compliance with Sections titled "Strength" and "Failure to Meet Strength Requirements" of ASTM C94. The "purchaser" referred to in C94 is the Construction Contractor.

B. When the tests on control specimens of concrete fall below the required strength, the Engineer will permit check tests for strengths to be made by means of typical cores drilled from the structure in compliance with ASTM C42 and C39. In cases where tests of cores fall below the values given in Table 1, the Engineer, in addition to other recourses, may require load tests on any one of the slabs, walls, beams, and columns in which such concrete was used. Test need not be made until concrete has aged 60 days. The Engineer may require strengthening or replacement of those portions of the structure which fail to develop the required strength. All coring and testing and/or load tests and any strengthening or concrete replacement required because strengths of test specimens are below that specified, shall be at no additional cost to the Owner.

C. Should the strength of test cylinders fall below 60 percent of the required minimum 28 day strength, the concrete shall be rejected and shall be removed and replaced at no additional cost to the Owner.

3.12 PATCHING AND REPAIRS

A. It is the intent of these Specifications to require quality work including forming, mixture and placement of concrete and curing so completed concrete surfaces will require no patching or repairs.

B. As soon as the forms have been stripped and the concrete surfaces exposed: remove fins and other projections; fill recesses left by the removal of form ties; and repair surface defects which do not impair structural strength. Clean all exposed concrete surfaces and adjoining work stained by leakage of concrete.

C. Immediately after removal of forms remove tie cones and metal portions of ties as specified in Section 03100. Fill holes promptly upon stripping as follows: Moisten the hole with water, followed by a 1/16-in brush coat of neat cement slurry mixed to the consistency of a heavy paste. Immediately plug the hole with a 1 to 1.5 mixture of cement and concrete sand mixed slightly damp to the touch (just short of "balling"). Hammer the grout into the hole until dense, and an excess of paste appears on the surface in the form of a spider web. Trowel smooth with heavy pressure. Avoid burnishing.

D. When filling tie cone holes and patching or repairing exposed surfaces use the same source of cement and sand as used in the parent concrete. Adjust color to match by addition of white cement. Rub lightly with a fine carborundum stone at an age of one to five days if necessary to bring the surface down with the parent concrete. Do not damage or stain the virgin skin of the surrounding parent concrete. Wash thoroughly to remove all rubbed matter.

E. Defective concrete and honeycombed areas: Chip down square and at least 1-in deep to sound concrete with hand chisels or pneumatic chipping hammers. Irregular voids or surface stones need not be removed if they are sound, free of laitance, and firmly embedded in the parent concrete. If honeycomb exists around reinforcement, chip to provide a clear space at least 3/8-

in wide all around the steel. For areas less than 1-1/2-in deep, the patch may be made in the same manner as described above for filling form tie holes, care being exercised to use adequately dry (non-trowelable) mixtures and to avoid sagging. Thicker repairs will require build-up in successive 1-1/2-in layers on successive days, each layer being applied (with slurry, etc.) as described above.

F. For very heavy (generally formed) patches, the Engineer may order the addition of pea gravel to the mixture and the proportions modified as follows:

Material	Volumes	Weights
Cement	1.0	1.0
Sand	1.0	1.0
Pea Gravel	1.5	1.5

G. The Construction Contractor may use a pre-packaged patching compound, such as: Poly-Patch by Euclid Chemical Company; Emaco R310 by BASF Chemical Company; Sikatop 122 Plus by Sika Chemical Corporation or equal only if approved by the Engineer for use and for color match.

3.13 SCHEDULE

A. The following (Table 5) are the general applications for the various concrete classes and design strengths:

TABLE 5

Class	Design Strength (psi)	Description
A	2,500	Concrete fill, concrete fill for bollards, sidewalks, electrical raceway encasement and pipe encasement.
E1	4,500	Structural concrete: foundation mats and slabs, walls, and footings 16-in and greater in thickness.
E2	4,500	Except as noted above for Class E1 concrete: Structural concrete greater than 10-in in thickness including walls, slabs on grade, elevated slab and beam systems, columns, grade beams, and all other structural concrete greater than 10-in in thickness.

END OF SECTION

© 2019 CDM Smith
All Rights Reserved

THIS PAGE INTENTIONALLY LEFT BLANK

© 2019 CDM Smith
All Rights Reserved

SECTION 03350
CONCRETE FINISHES

PART 1 GENERAL

1.01 SCOPE OF WORK

A. Furnish all labor, materials, equipment and incidentals required and finish cast-in-place concrete surfaces as specified herein and as indicated on the Drawings.

1.02 RELATED WORK

A. Concrete and finishing for walkway and pavements is included in Division 2.

B. Concrete formwork is included in Section 03100.

C. Cast-in-place concrete is included in Section 03300.

D. Grout is included in Section 03600.

E. Modifications to existing concrete are included in Section 03740.

1.03 SUBMITTALS

A. Submit, in accordance with Section 01300, shop drawings and product data showing materials of construction and details of installation for:

1. Concrete sealer. Include catalog cuts, technical data, storage requirements, product life, working time after mixing, temperature considerations and Material Safety Data Sheet. Also submit confirmation that the sealer is compatible with additionally applied coatings.

2. Chemical hardener. Include catalog cuts, technical data, storage requirements, product life, working time after mixing, temperature considerations and Material Safety Data Sheet. Also submit confirmation that the hardener is compatible with sealer.

1.04 REFERENCE STANDARDS

A. American Society for Testing and Materials (ASTM)

1. ASTM C144 - Standard Specification for Aggregate for Masonry Mortar

B. Where reference is made to one of the above standards, the revision in effect at the time of bid opening shall apply.

1.05 RESPONSIBILITY FOR CHANGING FINISHES

A. The surface finishes specified for concrete to receive coatings or other finish materials are those required for the proper application of the products specified under other Sections. Where products different from those specified are approved for use determine if changes in finishes are required and provide the proper finishes to receive these products.

B. Perform changes in finishes made to accommodate products different from those specified at no additional cost to the Owner. Submit the proposed new finishes to the Engineer for approval.

PART 2 PRODUCTS

2.01 MATERIALS

A. Cementitious and component materials required for finishing concrete surfaces: As specified in Section 03300.

B. Concrete sealer: "Kure-N-Seal", by BASF Building Systems or equal acrylic sealer.

PART 3 EXECUTION

3.01 FORMED SURFACES

A. Form removal: Conform to Sections 03100 and 03300.

B. Do not damage edges or obliterate the lines of chamfers, rustications or corners when removing the forms or doing any other work adjacent thereto.

C. Clean all exposed concrete surfaces and adjoining work stained by leakage of concrete.

D. Off-Form Finish

1. Remove fins and other projections and fill tie cones and defects as specified in Section 03300.

E. Rubbed Finish

1. Immediately upon stripping forms and before concrete changes color, carefully remove all fins with a hammer. While the surface is still damp apply a thin coat of medium consistency neat cement slurry using bristle brushes to provide a bonding coat within all pits, air holes or blemishes in the parent concrete. Do not coat large areas of the surface with this slurry.

2. Before the slurry dries or changes color, apply a dry (almost crumbly) grout consisting of one volume cement to 1-1/2 volumes of clean masonry sand having a fineness modulus of approximately 2.25 and complying with the gradation requirements of ASTM C144. Apply grout uniformly using damp (neither dripping wet nor dry) pads of coarse burlap approximately 6-in square used as a float. Scrub grout into the pits and air holes to provide a dense mortar in the imperfections to be patched.

3. Allow the mortar to partially harden for one or two hours depending upon the weather. If the air is hot and dry, keep the surface damp during this period using a fine, fog spray. When the grout has hardened sufficiently so it can be scraped from the surface with the perpendicular edge of a steel trowel without damaging the grout in the small pits or holes, cut off all grout that can be removed with a trowel. Grout allowed to remain on the surface too long will get too hard and will be difficult to remove.

4. Allow the surface to dry and rub it vigorously with clean dry burlap to completely remove any dried grout. No visible film of grout should remain after this rubbing. The entire cleaning operation for any area must be completed the day it is started. Do not leave grout on surfaces overnight. Allow grout to dry after it has been cut off with the trowel so it can be wiped off clean with the burlap.

5. On the day following the repair of pits, air holes and blemishes, the surfaces again shall be wiped off clean with dry, used pieces of burlap containing old hardened mortar which will act as a mild abrasive. After this treatment, there shall be no built-up film remaining on the parent surface. If, however, a built-up film remains, use a fine abrasive stone to remove all such material without breaking through the surface film of the original concrete. Scrub lightly to remove excess material without working up a lather or mortar or changing the texture of the concrete.

6. Follow the final bagging or stoning operation with a thorough wash-down with stiff bristle brushes to remove extraneous materials from the surface. Spray the surface with a fine fog spray periodically to maintain a continually damp condition for at least 3 days after the application of the repair grout.

7. The Rubbed Finish application may be deleted by the Engineer if the unfinished concrete surface is of superior quality and without surface voids.

3.02 FLOORS AND SLABS

A. Consider the potential for longer setting time in concrete containing fly ash.

B. Compact with internal vibrators as specified in Section 03300 and screed to the established grades. Provide floors and slabs level with a tolerance of 1/8-in when checked with a 12-ft straightedge, except where drains occur, in which case pitch floors to drains as indicated. Failure to meet either of above shall be cause for removal, grinding, or other correction as directed by the Engineer, at no additional cost to the Owner.

C. Following screeding as specified above, float the slabs as approved by the Engineer. Continue floating operation until sufficient mortar is brought to the surface to fill all voids. Test the surfaces with a straightedge to detect high and low spots which shall be eliminated. Do not overwork the concrete as evidenced by excess water and fine material on the surface.

D. Do not use "jitterbugs" or other special tools designed for the purpose of forcing the coarse aggregate away from the surface and allowing a layer of mortar to accumulate on any slab finish. Do not dust surfaces with dry materials. Round off all edges of slabs and tops of walls with a steel edging tool. Use steel edging tool with radius of 1/4-in for all slabs subject to wheeled traffic.

E. Measure floor flatness the day after a concrete floor is finished and before the shoring is removed, in order to eliminate any effects of shrinkage, curling and deflection. A 12-ft long straightedge shall be supported at each end with steel gauge blocks whose thickness are equal to tolerance specified. Floor surface shall not have crowns so high as to prevent 12-ft straightedge from resting on the two end blocks, nor low spots so low that a third block of twice the tolerance in thickness can pass under the supported straightedge. Compliance with the designated limits in four of five consecutive measurements will confirm compliance, unless

obvious faults are observed. A check for adequate slope and drainage will also be made to confirm compliance.

F. Descriptions

1. Steel Trowel Finish. Finish by screeding and floating with straightedges to bring the surfaces to the elevations indicated. While the concrete is still green, but sufficiently hardened to bear a person's weight without deep imprint, the surface shall be wood floated to a true, even plane with no coarse aggregate visible. Apply sufficient pressure on the wood floats to bring moisture to the surface. After surface moisture has disappeared, hand steel trowel to produce a smooth, impervious surface, free from trowel marks. Trowel the surface again for the purpose of burnishing. The final troweling shall produce a ringing sound from the trowel. Do not use dry cement or additional water in troweling.

2. Wood Float Finish. Finish by screeding with straightedges to bring the surfaces to the elevations indicated. Use a wood float to compact and seal surface. Remove all laitance and leave a clean surface.

3. Light Broomed Finish. Steel trowel finish the concrete, as specified above but omit the final troweling and finish the surface by drawing a fine-hair broom lightly across the surface. Broom in the same direction and parallel to expansion joints, or in the case of inclined slabs, perpendicular to the slope, or except as directed otherwise.

4. Broomed Finish. Steel trowel finish the concrete, as specified above but omit the final troweling. While the concrete is still soft enough, finish the surface with a stiff coarse fiber broom to produce the pattern and depth of scoring as approved by the Engineer.

5. Power Machine Finish. In lieu of hand steel trowel finishing, an approved power machine for finishing concrete floors and slabs may be used in accordance with the directions of the machine manufacturer and as approved by the Engineer. Do not use a power machine until the concrete has attained the necessary set to allow finishing without introducing high and low spots in the slab. Hand steel trowel the areas of slabs not accessible to power equipment. Provide a final steel troweling done by hand over all areas.

G. Concrete Sealer

1. Prepare and seal surfaces indicated on the Drawings to receive a sealer as follows:
   a. Finish concrete as specified in the preceding paragraphs and in accordance with the Schedule of Finishes in Paragraph 3.04 below.
   b. Newly Placed Concrete: Surface must be sound and properly finished. Surface is application-ready when it is damp but not wet and can no longer be marred by walking workers.
   c. Newly-Cured Bare Concrete: Level any spots gouged out by trades. Remove all dirt, dust, droppage, oil, grease, asphalt and foreign matter. Cleanse with caustics and detergents as required. Rinse thoroughly and allow to dry so that surface is no more than damp, and not wet.
   d. Existing Concrete: Restore surface soundness by patching, grouting, and filling cracks and holes. Surface must also be free of any dust, dirt and other foreign matter. Use power tools and/or strippers to remove any incompatible sealers or coatings. Cleanse as required, following the procedure indicated under cured concrete.

e. Application: Apply sealer so as to form a continuous, uniform film by spray, soft-bristle pushbroom, long-nap roller, lambswool applicator, or ordinary garden-type sprayers.
f. For curing only, two coats are required. Apply first coat evenly and uniformly as soon as possible after final finishing at the rate of 200 to 400 sq ft per gallon. Apply second coat when all trades are completed and structure is ready for occupancy at the rate of 400 to 600 sq ft per gallon.
g. To seal and dustproof, two coats are required. For sealing new concrete, both coats shall be applied full-strength. On aged concrete, when renovating, dustproofing and sealing, the first coat should be thinned 10 to 15 percent with reducer per manufacturer's directions.

3.03 APPROVAL OF FINISHES

A. All concrete surfaces, when finished, will be inspected by the Engineer.

B. Refinish or rework unsatisfactory finishes until approved by the Engineer, at no additional cost to the Owner.

C. Hardened unsatisfactory finishes will require removal, grinding, or other appropriate correction approved by the Engineer, at no additional cost to the Owner.

3.04 SCHEDULE OF FINISHES

A. Finish concrete in the various specified manners either to remain as natural concrete or to receive an additional applied finish or material under another Section. Where products different from those specified are approved for use comply with the requirements of Paragraphs 1.05A and 1.05B.

B. Finishes to the base concrete for the following conditions shall be as scheduled below and as further specified herein:

1. Exposed exterior concrete excluding slabs and walking surfaces - Rubbed finish. (Rub open tank walls above and to 1-ft below normal water line).

2. Concrete for exterior on stairs and other horizontal areas - Broomed finish, non-slip.

3. Exposed interior concrete including underside slabs, beams and stairs and sides of openings, beams and stairs - Rubbed finish.

4. Concrete for interior walking surfaces excluding stairs – wood float finish.

5. Concrete for interior stairs and metal pan stairs - Light broomed finish, non-slip.

6. Walls of open topped tanks - Rubbed finish above and to 1-ft below normal water line. Off-form finish from 1-ft below normal water line to base of wall.

7. Concrete stairs, landings and platforms below normal water level in liquid retaining structures – Broomed finish, non-slip.

8. Tops of curbs and pads - Steel trowel finish.

9. Concrete on which liquids flow or are contained - Steel troweled finish.

10. Concrete not exposed in the finished work and not scheduled to receive an additional applied finish or material - Off-form finish at vertical surfaces, consolidate and screed to grade at horizontal surfaces.

11. Concrete to receive dampproofing - Off-form finish.

12. Concrete to receive capillary waterproofing - Off-form finish at vertical and overhead surfaces, light broomed finish at horizontal surfaces.

13. Concrete to receive cementitious slurry waterproofing - Off-form finish at vertical surfaces, light broomed finished horizontal surfaces.

14. Concrete to receive paint - Rubbed finish.

15. Concrete to receive floor sealer - See Paragraph 3.02G above.

16. Concrete to receive seamless flooring - Once-over steel trowel finish.

17. Concrete to receive ceramic and quarry tile - Broomed finish as approved.

18. Concrete to receive vinyl and rubber surfacing and carpet - Steel trowel finish.

19. Concrete to receive rubberized asphalt sheet membrane waterproofing - Wood float finish at horizontal surfaces, rubbed finish at vertical surfaces.

20. Concrete to receive roof insulation - Consolidate, screed and wood float to required grades.

END OF SECTION

© 2019 CDM Smith
All Rights Reserved

SECTION 03390
UNDER-SLAB VAPOR RETARDERS

PART 1 GENERAL

1.01 SCOPE OF WORK

A. Furnish all labor, materials, equipment and incidentals required and design and deliver under-slab vapor retarders for the Project as shown on the Drawings and as specified herein.

1.02 RELATED WORK

A. Cast-In-Place Concrete is included in Section 03300.

1.03 SUBMITTALS

A. Submit in accordance with Section 03100.

B. Product Data: For each type of product indicated.

C. Material Certificates: For under-slab vapor retarders.

1.04 REFERENCE STANDARDS

A. ASTM International

1. ASTM E 1643 - Standard Practice for Selection, Design, Installation, and Inspection of Water Vapor Retarders Used in Contact with Earth or Granular Fill Under Concrete Slabs

2. ASTM E 1745 - Standard Specification for Water Vapor Retarders Used in Contact with Soil or Granular Fill under Concrete Slabs

B. Where reference is made to one of the above or other referenced standards, the revisions in effect at the time of bid opening shall apply.

1.05 QUALITY ASSURANCE

A. Source Limitations: Obtain under-slab vapor retarders from single source, and obtain admixtures from single source from single manufacturer.

1.06 DELIVERY, STORAGE, AND HANDLING

A. Deliver, store, and handle under-slab vapor retarders to prevent bending and damage.

PART 2 PRODUCTS

2.01 UNDER-SLAB VAPOR RETARDERS

A. Under-Slab Vapor Retarders: ASTM E 1745, Class A, except with maximum perm rating of 0.01. Include manufacturer's recommended adhesive or pressure-sensitive tape.

1. Products: Subject to compliance with requirements, provide one of the following:

a. Carlisle Coatings & Waterproofing, Inc.; Blackline 400.
b. Grace Construction Products, W. R. Grace & Co.; Florprufe 120.
c. Meadows, W. R., Inc.; Perminator 15 mil.
d. Raven Industries Inc.; Vapor Block 15.
e. Or equal.

2. Thickness: Minimum 15 mils.

B. Accessories: Seam tape and mastic materials approved in writing by the manufacturer for use with under-slab vapor retarder.

PART 3 EXECUTION

3.01 EXAMINATION

A. Examine conditions, with Installer present, for compliance with requirements for installation tolerances and other conditions affecting performance of the Work.

1. For the record, prepare written report, endorsed by Installer, listing conditions detrimental to performance of work.

B. Proceed with installation only after unsatisfactory conditions have been corrected.

3.02 UNDER-SLAB VAPOR RETARDERS

A. Under-Slab Vapor Retarders: Place, protect, and repair sheet vapor retarder according to ASTM E 1643 and manufacturer's written instructions.

1. Lap joints 6 inches and seal with manufacturers recommended tape.

END OF SECTION

© 2019 CDM Smith
All Rights Reserved

SECTION 03480
PRECAST CONCRETE BUILDING

PART 1 GENERAL

1.01 SCOPE OF WORK

A. A complete factory-build precast concrete building shall be supplied and installed for the Electrical Building in accordance with project plans and specifications.

B. All openings, sleeves, conduit blockouts, sealing elements and appurtenances in the precast building shall be part of the work of this Section.

1.02 RELATED WORK

A. Joint Sealants are included in Division 7.

B. Doors, Frames and Hardware are included in Division 8.

C. Finish Painting is included in Division 9.

D. Building Mechanical is included in Division 15.

E. Electrical work is included in Division 16.

1.03 SUBMITTALS

A. Submit to the ENGINEER, in accordance with Section 01300, shop drawings and material data showing dimensions, sizes, thickness, materials, finishes and methods of assembly. Submit manufacturer's technical data for all building hardware and equipment. All work shall be fabricated and erected in accordance with the manufacturer's drawings.

B. Shop Drawings: For the following precast concrete building system components. Include plans, elevations, sections, details, and attachments to other work.

1. For installed products indicated to comply with design loads, include structural analysis data signed and sealed by the qualified professional engineer responsible for their preparation.

C. Engineering calculations that are designed and sealed by a professional engineer, licensed to practice in the state of Florida, shall be submitted for approval.

D. Product Certificates: For each type of precast concrete building system, signed by product manufacturer.

1. Letter of Design Certification: Signed and sealed by a professional engineer licensed in the State of Florida. Include the following:
   a. Name and location of Project.
   b. Order number.
   c. Name of manufacturer.
   d. Name of Contractor.

e. Building dimensions including width, length, height, and roof slope.
f. Governing building code and year of edition.
g. Design Loads: Include dead load, roof live load, collateral loads, deflection, seismic, wind loads/speeds and exposure, and auxiliary loads.
h. Load Combinations: Indicate that loads were applied acting simultaneously with concentrated loads, according to governing building code.
i. Building-Use Category: Indicate category of building use and its effect on load importance factors.

1.04 REGULATORY REQUIREMENTS

A. The products, materials and assemblies, including anchorage, proposed for the work of this Section shall comply with project specific calculated design pressures and the Florida Building Code (Code), and shall be designed by the Manufacturer and installed by the Contractor to meet these requirements. Refer to project design pressures in the components and cladding table on the structural drawings. Where a conflict occurs between the requirements of this Specification and the Code, the more stringent requirement shall apply.

B. It shall be the responsibility of the contractor to provide evidence of code compliance for the products, materials and assemblies, including anchorage specified in this section. Evidence of code compliance shall be demonstrated by compliance with the Florida Building Code, using one of the methods outlined in Chapter 9N-3 of the Florida Administrative Code, Department of Community Affairs, Florida Building Commission, Product Approval.

1.05 REFERENCE STANDARDS

A. American Society for Testing and Materials (ASTM)

1. ASTM C150 – Portland Cement

2. ASTM C33 - Concrete Aggregates

3. ASTM C260 – Air-Entraining Admixtures for Concrete

4. ASTM A185 – Steel Welded Wire Fabric for Concrete Reinforcement

5. ASTM C494 – Chemical Admixtures for Concrete

6. ASTM AC615 – Deformed and Plain Billet Steel Bars for Concrete Reinforcement

B. American Concrete Institute (ACI)

1. ACI-318 Building Code Requirements for Structural Concrete

C. American Society of Civil Engineers/Structural Engineering Institute

1. ASCE/SEI 7 - Minimum Design Loads for Buildings and Other Structures

D. JEA Standards Section VI Prefabricated Concrete Enclosure.

E. Where reference is made to one of the above standards, the revision in effect at the time of bid opening shall apply.

1.06 QUALITY ASSURANCE

A. Fabricator shall be a certified producer/member of The Precast/Prestressed Concrete Institute (PCI) or National Precast Concrete Association (NPCA).

B. The precast concrete building fabricator shall have a minimum of five years' experience in manufacturing and setting transportable precast concrete buildings. In addition, the manufacturer shall have made no less than 10 buildings similar to the one on this project. Evidence must be submitted to verify that these requirements are met prior to being deemed an acceptable manufacturer.

C. The ENGINEER shall have the right to inspect or test any material during fabrication in the factory. At the option of the ENGINEER, certified test of materials may be accepted in lieu of field test.

1.07 DELIVERY, STORAGE AND HANDLING

A. Deliver precast concrete building so as not to be damaged or deformed. Package precast concrete building for protection during transportation and handling.

B. Unload, precast concrete building in a manner to prevent bending, warping, twisting, and surface damage.

1.08 PROJECT CONDITIONS

A. Weather Limitations: Proceed with installation of precast concrete building only when weather conditions permit it to be installed according to manufacturers' written instructions and warranty requirements.

1.09 WARRANTY

A. The manufacture shall warrant the building for ten (10) years from the date of installation and its components for two (2) years from the date of installation.

B. The precast concrete structure shall endure and not deteriorate for a period of ten (10) years.

C. Component Warranty: Submit warranty covering all building components for two (2) years from date of Substantial Completion.

D. The enclosure shall be guaranteed to be completely weather-tight under all weather conditions for a period of three (3) years minimum. Leaks which occur during that period, whether through roofs, walls, doors, accessory equipment, or materials, shall be repaired to the satisfaction of JEA at no additional cost to JEA.

1.10 DESIGN CRITERIA

A. Structural design calculation for the building shall be prepared and sealed by a registered professional engineer, in the State of Florida, and shall be submitted for approval prior to fabrication.

B. The building shall be designed to meet the following minimum loading requirements:

1. Roof Live Load: 20 psf non reducible

2. Floor Live Load: 200 psf

3. Wind load:
   a. Ultimate Design Wind Speed (V_{ult}) = 138 mph.
   b. Normal Design Wind Speed (V_{asd}) = 107 mph.
   c. Internal Pressure Coefficient = +/- 0.18
   d. Risk Category III / IV
   e. Exposure = C

4. Seismic:
   a. Seismic Loads not applicable per FBC Declaratory Statement DS2015-092.

5. Load Combinations: Design precast concrete building systems to withstand the most critical effects of load factors and load combinations as required by ASCE/SEI 7, "Minimum Design Loads for Buildings and Other Structures."

C. The building shall be constructed and meet all requirements of the Florida Building Code Sixth Edition (2017).

D. The building shall be constructed of steel-reinforced precast concrete.

E. Thermal Performance: Provide roof and wall assemblies with the following maximum U-factors and minimum R-values for opaque elements when tested according to ASTM C 1363 or ASTM C 518:

1. Roof Assemblies:
   a. R-Value: R-21.

2. Wall Assemblies:
   a. R-Value: R-14.

F. The precast concrete building shall be such that the roof, walls and slab are cast at manufacture. The floor shall be permanently attached to the walls by welded connections. Blockouts in slab shall be coordinated with equipment and shall avoid building foundation.

G. The building shall be constructed of solid, one-piece concrete panels. Panels shall be bolted or welded together and joints caulked inside and out to make the building weatherproof. The wall exterior panels shall be minimum 4” thick solid panels of concrete with primary structural reinforcement of steel bars and welded wire fabric. Wall panel assembly shall develop strength to resist the design wind loads. Wall panels shall be continuous from base to eave with no horizontal joints.

H. The building shall be entirely factory assembled and shipped in as few sections as is practical.

I. Caulking shall be provided at all bases, corners, eaves, doors, and other openings to provide a completely weather-tight installation. Sill angles and door frames shall be caulked in place and sealed. Building shall be caulked both inside and out.

J. All necessary erection hardware, fasteners, trim, flashing, closures and other accessories necessary for a complete building shall be furnished. The enclosure shall be assembled in accordance with the building manufacturer's instructions. All members shall be carefully leveled. All welding shall be in accordance with AWS D1.1 Structural Welding Code.

K. The CONTRACTOR shall coordinate the location of all penetrations and openings with the building manufacturer and equipment supplier's as shown on design Drawings.

PART 2 PRODUCTS

2.01 MANUFACTURER

A. Provide precast concrete building manufactured by a licensed manufacturer of one of the following:

1. Leesburg Concrete Company.

2. Modular Connections.

3. Or JEA approved equal.

2.02 FABRICATION REQUIREMENTS

A. Dimensions:

1. Minimum Exterior: 11'-8" wide x 46'-8" length x 10'-0" height, coordinate final dimensions with electrical equipment

B. Roof: Roof panel shall slope 1/2-inch from middle to each side in short direction. The roof shall extend a minimum of 2-1/2-inches beyond the wall panel on each side and have a turndown design which extends 1/2-inch below the top edge of the wall panels to prevent water migration into the building along top of wall panels.

2.03 MATERIALS

A. Concrete

1. Concrete used in the manufacture of the various structural components of the precast concrete building shall be factory batched and shall meet the following requirements:
   a. Portland cement shall be Type I, II, or III conforming to ASTM C-150.
   b. Coarse aggregate shall consist of 1/2" maximum well graded crushed stone conforming to ASTM specification C-33.
   c. Fine aggregate shall consist of natural sand conforming to ASTM specification C-33.
   d. Air entrainment admixture shall conform to ASTM C260. The air-entrained content shall be not less than 4% or greater than 7%.

e. A superplasticizer shall be used and shall conform to ASTM C494 type F or G. Concrete shall be placed at a slump of between 5 and 8 inches.
f. The concrete used for the structural components shall attain a minimum 28-day compressive strength of 5,000 psi. Refer to specification 03301 for all other concrete requirements.

B. Steel Reinforcing

1. Welded wire fabric shall conform to ASTM A185. Reinforcing steel shall be new billet steel meeting the requirements of ASTM A615.

2. All reinforcement shall be free from loose rush, oil, and contaminates which reduce bond. Any foreign material shall be removed by suitable means prior to installation.

3. Provide supports for reinforcement including chairs, bolster bars, and other devices for spacing and securing reinforcement in accordance with CRSI requirements. Legs of all supports in contact with exposed-to-view surfaces shall be plastic coated in accordance with CRSI, class I.

2.04 MISCELLANEOUS MATERIALS

A. Caulking: All joints between panels shall be caulked on the exterior and interior surface of the joints. Caulking shall be SIKAFLEX-1A elastic sealant or equal. Exterior caulk joint to be 3/8" x 3/8" square so that sides of joint are parallel for correct caulk adhesion. Back of joint to be taped with bond breaking tape to ensure adhesion of caulk to parallel sides of joint and not the back.

2.05 BUILIDNG INTERIOR

A. Insulation

1. Interior wall and ceiling insulation shall be polyisocyanurate glass-fiber-mat faced board, Type II, Class 2 complying with ASTM C1289.
   a. Walls – 2-inch thick, R-value 12
   b. Ceiling – 3-inch thick, R-value 18

B. Wall and Ceiling Liner Panels

1. FRP laminated wall and ceiling panels
   a. Manufacturer- Kemply laminated panel or equal
   b. Substrate – 1/2-inch gypsum board
   c. Wall Panel Size - 4 ft x 10 ft
   d. Ceiling Panel Size – 2 ft x 2 ft
   e. Color - White
   f. Provide blocking and furring as required for attachment of wall and ceiling panels.

2. Provide all fasteners and moldings as required for a complete system.

2.06 BUILDING EXTERIOR

A. The exterior wall finish shall be a pre-cast architectural sand finish. Exterior walls to be painted per specification section 09902. The color shall be selected and approved by Owner from manufacturer's full range.

PART 3 EXECUTION

3.01 EXAMINATION

A. Examine substrates, in place grade beams, surrounding areas, and conditions, with Erector present, for compliance with requirements for installation tolerances and other conditions affecting performance of work.

1. For the record, prepare written report, endorsed by Erector, listing conditions detrimental to performance of work.

B. Before erection proceeds, survey elevations and locations of concrete-bearing surfaces and locations of anchor rods, bearing plates, and other embedments to receive precast concrete building, with Erector present, for compliance with requirements.

1. Engage land surveyor to perform surveying.

C. Proceed with erection only after unsatisfactory conditions have been corrected.

3.02 PREPARATION

A. Provide temporary shores, braces, and other supports during erection to keep precast concrete building, plumb, and in alignment against temporary construction loads and loads equal in intensity to design loads. Remove temporary supports when permanent structural framing, connections, and bracing are in place, unless otherwise indicated.

3.03 ERECTION OF PRECAST CONCRETE BUILDING

A. Erect precast concrete building according to manufacturer's written erection instructions and erection drawings.

3.04 ACCESSORY INSTALLATION

A. General: Install accessories with positive anchorage to building and weathertight mounting, and provide for thermal expansion. Coordinate installation with other components.

1. Install components required for a complete roof assembly.

2. Where dissimilar metals will contact each other or corrosive substrates, protect against galvanic action by painting contact surfaces with bituminous coating, by applying rubberized-asphalt underlayment to each contact surface, or by other permanent separation as recommended by manufacturer.

3.05 FIELD QUALITY CONTROL

A. Correct deficiencies in Work that test reports and inspections indicate do not comply with the Contract Documents.

END OF SECTION

© 2019 CDM Smith
All Rights Reserved

SECTION 03600
GROUT

PART 1 GENERAL

1.01 SCOPE OF WORK

A. Furnish all labor, materials, equipment and incidentals required and install grout complete as shown on the Drawings and as specified herein.

B. Perform all sampling and furnish all testing of materials and products by an independent testing laboratory acceptable to the Engineer but engaged by and at the expense of the Construction Contractor.

1.02 RELATED WORK

A. Concrete formwork is included in Section 03100.

B. Concrete reinforcement is included in Section 03200.

C. Concrete joints and joint accessories are included in Section 03250.

D. Cast-in-place concrete is included in Section 03300.

E. Modifications to existing concrete are included in Section 03740.

F. Miscellaneous metals are included in Section 05500.

1.03 SUBMITTALS

A. Submit, in accordance with Section 01300, shop drawings and product data showing materials of construction and details of surface preparation, mixing and installation for:

1. Commercially manufactured non-shrink cementitious grout and self-leveling cementitious underlayment grout. Include catalog cuts, technical data, storage requirements, product life, working time after mixing, temperature considerations, conformity to the specified ASTM standards, and Material Safety Data Sheet.

2. Commercially manufactured non-shrink epoxy grout. Include catalog cuts, technical data, storage requirements, product life, working time after mixing, temperature considerations, conformity to the specified ASTM standards, and Material Safety Data Sheet.

3. Cement grout. Include the type and brand of cement, the gradation of fine aggregate, product data on any proposed admixtures and the proposed grout mix.

4. Concrete grout. Include data as required for concrete as delineated in Section 03300 and for fiber reinforcement as delineated in Section 03200.

B. Samples

1. Submit samples of commercially manufactured grout products when requested by the Engineer.

2. Submit samples of aggregates proposed for use in grout mixes when requested by the Engineer.

C. Laboratory Test Reports

1. For concrete grout, submit laboratory test data as required for concrete as delineated in Section 03300.

D. Certifications

1. Certify that the Construction Contractor is not associated with the independent testing laboratory, nor does the Construction Contractor or its officers have a beneficial interest in the laboratory.

E. Qualifications

1. Submit documentation that grout manufacturers have a minimum of at least 10 years experience in the production and use of the grouts proposed.

2. Independent Testing Laboratory
   a. Name and address
   b. Names and positions of principal officers and the name, position, and qualifications of the responsible registered professional engineer in charge.
   c. Listing of technical services to be provided. Indicate external technical services to be provided by other organizations.
   d. Names and qualifications of the supervising laboratory technicians.
   e. Statement of conformance provided by evaluation authority defined in ASTM C1077. Provide report prepared by evaluation authority when requested by the Engineer.
   f. Submit as required above for other organizations that will provide external technical services.

1.04 REFERENCE STANDARDS

A. American Society for Testing and Materials (ASTM)

1. ASTM C33 - Standard Specification for Concrete Aggregates

2. ASTM C150 - Standard Specification for Portland Cement

3. ASTM C531 - Standard Test Method for Linear Shrinkage and Coefficient of Thermal Expansion of Chemical-Resistant Mortars, Grouts and Monolithic Surfacings and Polymer Concretes

4. ASTM C579 - Standard Test Methods for Compressive Strength of Chemical-Resistant Mortars, Grouts, Monolithic Surfacings and Polymer Concretes

5. ASTM C827 - Standard Test Method for Change in Height at Early Ages of Cylindrical Specimens of Cementitious Mixtures

6. ASTM C1077 - Standard Practice for Laboratories Testing Concrete and Concrete Aggregates for Use in Construction and Criteria for Laboratory Evaluation

7. ASTM C1107 - Standard Specification for Packaged Dry, Hydraulic-Cement Grout (Non-shrink)

8. ASTM D695 - Standard Test Method for Compressive Properties of Rigid Plastics.

9. ASTM E329 - Standard specification for agencies engaged in the testing and/or inspection of materials used in construction

B. Where reference is made to one of the above standards, the revision in effect at the time of bid opening shall apply.

1.05 QUALITY ASSURANCE

A. Qualifications

1. Grout manufacturers shall have a minimum of 10 years experience in the production and use of the type of grout proposed.

2. Independent testing laboratory shall meet the requirements of ASTM E329 and ASTM C1077 and be acceptable to the Engineer. Laboratories affiliated with the Construction Contractor or in which the Construction Contractor or officers of the Construction Contractor’s organization have beneficial interest are not acceptable.

B. Field Testing

1. Field testing of concrete grout will be as specified for concrete in Section 03300.

1.06 DELIVERY, STORAGE AND HANDLING

A. Deliver materials to the jobsite in original, unopened packages, clearly labeled with the manufacturer's name, product identification, batch numbers and printed instructions.

B. Store materials in full compliance with the manufacturer's recommendations. Limit total storage time from date of manufacture to date of installation to six months or the manufacturer's recommended storage time, whichever is less.

C. Remove immediately from the site material which becomes damp, contains lumps, or is hardened and replace with acceptable material at no additional cost to the Owner.

D. Deliver non-shrink cementitious grout and self-leveling cementitious underlayment grout as a pre-portioned blend in prepackaged mixes requiring only the addition of water.

E. Deliver non-shrink epoxy grout as a pre-proportioned, prepackaged, three component system requiring only mixing as directed by the manufacturer.

1.07 DEFINITIONS

A. Non-shrink Grout: A commercially manufactured product that does not shrink in either the plastic or hardened state, is dimensionally stable in the hardened state and bonds to a clean base plate.

PART 2 PRODUCTS

2.01 GENERAL

A. The use of a manufacturer's name and product or catalog number is for the purpose of establishing the standard of quality desired.

B. Like materials shall be the products of one manufacturer or supplier in order to provide standardization of appearance.

2.02 MATERIALS

A. Non-shrink Cementitious Grout

1. Non-shrink cementitious grouts: Conform to ASTM C1107. Grouts shall be portland cement based, contain a pre-proportioned blend of selected aggregates and shrinkage compensating agents and require only the addition of water. Non-shrink cementitious grouts shall not contain expansive cement or metallic particles. The grouts shall exhibit no shrinkage when tested in conformity with ASTM C827.
   a. General purpose non-shrink cementitious grout: Conform to the standards stated above. SikaGrout 212 by Sika Corp.; Set Grout by BASF Building Systems; NS Grout by The Euclid Chemical Co.; Five Star Grout by Five Star Products, Inc., or equal.
   b. Flowable (Precision) non-shrink cementitious grout: Conform to the standards stated above. Masterflow 928 by BASF Building Systems; Hi-Flow Grout by The Euclid Chemical Co.; SikaGrout 212 by Sika Corp.; Five Star Grout by Five Star Products, Inc., or equal.

B. Non-shrink Epoxy Grout

1. Non-shrink epoxy grout: Grout shall be pre-proportioned, prepackaged, three component, 100 percent solids system consisting of epoxy resin, hardener and blended aggregate. It shall have a compressive strength of 10,000 psi in 7 days when tested in conformity with ASTM D695 and have a maximum coefficient of thermal expansion of 30 x 10^{-6} in/in/degrees F when tested in conformity with ASTM C531. Masterflow 648 CP by BASF Building Systems; Five Star HP Epoxy Grout by Five Stars Products, Inc; Sikadur 42 Grout-Pak by Sika Corp.; E^3-G Epoxy Grout by the Euclid Chemical Co. or equal.

C. Cement Grout

1. A mixture of one part portland cement conforming to ASTM C150, Type I, II, or III and one to two parts sand conforming to ASTM C33 with sufficient water to place the grout. The water content shall be sufficient to impart workability to the grout but not to the degree that it will allow the grout to flow.

D. Concrete Grout

1. Conform to the requirements of Section 03300 except as specified herein. Proportion with Type II cement, coarse and fine aggregates, water, water reducing admixture and air entraining agent to produce a mix having an average strength of 3500 psi at 28 days (2500 psi nominal strength). Coarse aggregate size shall be 3/8-in maximum. Slump shall not exceed 5-in. Minimum cement content shall be 540 lbs per cubic yard and maximum water to cement ratio shall be 0.45.

2. Add synthetic reinforcing fibers as specified in Section 03200 to the concrete grout mix at the rate of 1.5 lbs of fibers per cubic yard of grout. Add fibers from the manufacturer's pre-measured bags and according to the manufacturer's recommendations to ensure complete dispersion of the fiber bundles as single monofilaments within the concrete grout.

E. Water

1. Potable water free of oil, acid, alkali, salts, chlorides (except those attributable to drinking water), organic matter, or other deleterious substances.

PART 3 EXECUTION

3.01 PREPARATION

A. Place grout where indicated or specified over existing concrete and cured concrete which has attained its specified design strength unless otherwise approved by the Engineer.

B. Concrete surfaces to receive grout shall be clean and sound; free of ice, frost, dirt, dust, grease, oil, form release agent, laitance and paints and free of all loose material or foreign matter which may affect the bond or performance of the grout.

C. Roughen concrete surfaces by chipping, sandblasting, or other dry mechanical means to bond the grout to the concrete. Remove loose or broken concrete. Irregular voids or projecting coarse aggregate need not be removed if they are sound, free of laitance and firmly embedded into the parent concrete.

1. Air compressors used to clean surfaces in contact with grout shall be the oilless type or equipped with an oil trap in the airline to prevent oil from being blown onto the surface.

D. Remove all loose rust, oil or other deleterious substances which may affect the bond or performance of the grout from metal embedments or bottom of baseplates prior to the installation of the grout.

E. Wash concrete surfaces clean and then keep moist for at least 24 hours prior to the placement of non-shrink cementitious or cement grout. Saturation may be achieved by covering the concrete with saturated burlap bags, use of a soaker hose, or flooding the surface or other method acceptable to the Engineer. Upon completion of the 24-hour period, remove visible water from the surface prior to grouting.

F. Non-shrink epoxy grouts do not require saturation of the concrete substrate. Do not wet concrete surfaces to receive non-shrink epoxy grout. Surfaces in contact with epoxy grout shall be completely dry before grouting.

G. Provide forms for grout. Line or coat forms with release agents recommended by the grout manufacturer. Provide forms anchored in place and shored to resist the forces imposed by the grout and its placement.

1. Forms for all grout other than concrete grout shall be designed to allow the formation of a hydraulic head and shall have chamfer strips built into forms.

H. Level and align the structural or equipment bearing plates in accordance with the structural requirements or the recommendations of the equipment manufacturer, as applicable.

I. Support equipment during alignment and installation of grout by shims, wedges, blocks or other approved means. The shims, wedges and blocking devices shall be prevented from bonding to the grout by bond breaking coatings and removed after grouting unless otherwise approved by the Engineer. Grout voids created by the removal of shims, wedges and blocks.

3.02 INSTALLATION - GENERAL

A. Mix, apply and cure products in strict compliance with the manufacturer's recommendations and these specifications.

B. Provide staffing and equipment available for rapid and continuous mixing and placing. Keep all necessary tools and materials ready and close at hand.

C. Maintain temperatures of the base plate, supporting concrete, and grout between 40 and 90 degrees F during grouting and for at least 24 hours after placement, until grout compressive strength reaches 1000 psi or as recommended by the grout manufacturer, whichever is longer. Do not allow differential heating or cooling of baseplates and grout during the curing period.

D. Take special precautions for hot weather or cold weather grouting as recommended by the manufacturer when ambient temperatures and/or the temperature of the materials in contact with the grout are outside of the 40 to 90 degrees F range.

E. Install grout to preserve the isolation between the elements on either side of the joint where grout is placed in the vicinity of an expansion or control joint.

F. Reflect all existing underlying expansion, control and construction joints through the grout.

3.03 INSTALLATION - NON-SHRINK CEMENTITIOUS GROUTS AND CEMENT GROUTS

A. Mix in accordance with manufacturer's recommendations. Do not add cement, sand, pea gravel or admixtures without prior approval by the Engineer.

B. Do not mix by hand. Mix in a mortar mixer with moving blades. Pre-wet the mixer and empty excess water. Add pre-measured amount of water for mixing, followed by the grout. Begin with the minimum amount of water recommended by the manufacturer and then add the minimum additional water required to obtain workability. Do not exceed the manufacturer's maximum recommended water content.

C. Placements greater than 3-in in depth shall include the addition of clean, washed pea gravel to the grout mix when approved by the manufacturer. Comply with the manufacturer's recommendations for the size and amount of aggregate to be added.

D. Provide forms as specified in Paragraph 3.01G. Place grout into the designated areas and prevent segregation and entrapment of air. Do not vibrate grout to release air or to consolidate the material. Fill all spaces and provide full contact between the grout and adjoining surfaces. Provide grout holes and vent holes as necessary.

E. Place grout rapidly and continuously to avoid cold joints. Do not place grout in layers. Do not add additional water to the mix (retemper) after initial stiffening.

F. Just before the grout reaches its final set, cut back the grout to the substrate at a 45-degree angle from the lower edge of bearing plate unless otherwise ordered and approved by the Engineer. Finish this surface with a wood float or brush finish.

G. Begin curing immediately after form removal, cutback, and finishing. Keep grout moist and within its recommended placement temperature range for at least 24 hours after placement, until grout compressive strength reaches 1000 psi or as recommended by the manufacturer, whichever is longer. Saturate the grout surface by use of saturated burlap bags, soaker hoses or ponding. Provide sunshades. If drying winds inhibit the ability of a given curing method to keep grout moist, erect wind breaks until wind is no longer a problem or curing is finished.

3.04 INSTALLATION – NON-SHRINK EPOXY GROUTS

A. Mix in accordance with manufacturer’s recommendations. Mix full batches only, to maintain proper proportions of resin, hardener and aggregate. Do not vary the ratio of components or add solvent to change the consistency of the grout mix. Do not overmix. Do not entrain air bubbles by mixing too quickly.

B. Monitor ambient weather conditions and contact the grout manufacturer for special placement procedures to be used for temperatures below 60 or above 90 degrees F.

C. Place grout rapidly and continuously to avoid cold joints. Place grout in lifts in accordance with manufacturer’s recommendations.

D. Provide forms as specified in Paragraph 3.01G. Place grout into the designated areas and prevent entrapment of air. Fill all spaces and provide full contact between the grout and adjoining surfaces. Provide grout holes and vent holes as necessary.

E. Minimize "shoulder" length (extension of grout horizontally beyond base plate). In no case shall the shoulder length of the grout be greater than the grout thickness.

F. Finish grout by puddling to cover all aggregate and provide a smooth finish. Break bubbles and smooth the top surface of the grout in conformity with the manufacturer's recommendations.

G. Epoxy grouts are self-curing and do not require the application of water. Maintain the formed grout within its recommended placement temperature range for at least 24 hours after placement, until grout compressive strength reaches 1000 psi or as recommended by the manufacturer, whichever is longer.

H. Provide grout control joints as indicated on the Drawings.

3.05 INSTALLATION - CONCRETE GROUT

A. Inspect slabs finished under Section 03350 and scheduled to receive concrete grout. Scarify existing slab surfaces to receive concrete grout. Protect and keep the surface clean until placement of concrete grout.

B. Remove debris and clean the surface by sweeping and vacuuming of all dirt and other foreign materials. Pressure wash the surface. Do not flush debris into tank drain lines.

C. Saturate the concrete surface for at least 24 hours prior to placement of the concrete grout by use of saturated burlap bags, soaker hoses or ponding. Remove excess water just prior to placement of the concrete grout. Place a cement slurry immediately ahead of the concrete grout so that the slurry is moist when the grout is placed. Work the slurry over the surface with a broom until it is coated with approximately 1/16 to 1/8-in thick cement paste.

D. Place concrete grout to final grade using the scrapers of the installed mechanical equipment as a guide for surface elevation and to eliminate high and low spots. Unless specifically approved by the equipment manufacturer, mechanical scraper mechanisms powered by their motors shall not be used as a finishing machine or screed to push grout.

E. Provide grout control joints as indicated on the Drawings.

F. Steel trowel finish as specified in Section 03350. Cure the concrete grout as specified for cast-in-place concrete in Section 03300.

3.06 SCHEDULE

A. The following list indicates where the particular types of grout are to be used:

1. General purpose non-shrink cementitious grout: Use at all locations where non-shrink grout is indicated on the Drawings, except for base plates greater in area than 3-ft wide by 3-ft long.

2. Flowable (precision) non-shrink cementitious grout: Use under all base plates greater in area than 3-ft wide by 3-ft long. Use at all locations indicated on the Drawings to receive flowable non-shrink grout. Flowable (precision), non-shrink, cementitious grout may be substituted for general purpose non-shrink cementitious grout.

3. Non-shrink epoxy grout: Use at all locations specifically indicated on the Drawings to receive non-shrink epoxy grout.

4. Cement grout: Use where indicated on the Drawings.

5. Concrete grout: Use for overlaying the base concrete for concrete grout fill within liquid retaining structures and other locations where specifically indicated on the Drawings.

END OF SECTION

© 2019 CDM Smith
All Rights Reserved

SECTION 03740
MODIFICATIONS TO EXISTING CONCRETE

PART 1 GENERAL

1.01 SCOPE OF WORK

A. Furnish all labor, materials, equipment and incidentals required and cut, repair or otherwise modify parts of existing concrete structures or appurtenances as shown on the Drawings and as specified herein.

B. Work under this Section shall also include bonding new concrete to existing concrete.

C. No existing structure or concrete shall be shifted, cut, removed, or otherwise altered until authorization is given by the Engineer.

D. When removing materials or portions of existing structures and when making openings in existing structures, all precautions shall be taken and all necessary barriers, shoring and bracing and other protective devices shall be erected to prevent damage to the structures beyond the limits necessary for the new work, protect personnel and to prevent damage to the structures or contents by falling or flying debris. Unless otherwise permitted, shown or specified, line drilling will be required in cutting existing concrete.

1.02 RELATED WORK

A. Excavation and backfill are included in Division 2.

B. Concrete, concrete reinforcement and accessories are included in Division 3.

1.03 REFERENCE STANDARDS

A. American Society for Testing and Materials (ASTM)

1. ASTM C881 - Standard Specification for Epoxy-Resin-Base Bonding Systems for Concrete.

2. ASTM C882 - Standard Test Method for Bond Strength of Epoxy-Resin Systems Used with Concrete by Slant Sheer.

3. ASTM C883 - Standard Test Method for Effective Shrinkage of Epoxy-Resin Systems Used with Concrete.

4. ASTM D570 - Standard Test Method for Water Absorption of Plastics.

5. ASTM D638 - Standard Test Method for Tensile Properties of Plastics.

6. ASTM D695 - Standard Test Method for Compressive Properties of Rigid Plastics.

7. ASTM D732 - Standard Test Method for Shear Strength of Plastics by Punch Tool.

8. ASTM D790 - Standard Test Methods for Flexural Properties of Unreinforced and Reinforced Plastics and Electrical Insulating Materials.

B. Where reference is made to one of the above standards, the revision in effect at the time of bid opening shall apply.

PART 2 PRODUCTS

2.01 MATERIALS

A. Bonding Compound

1. The bonding compound shall be a two-component, solvent-free, moisture insensitive epoxy resin material suitable for use as a bonding adhesive to bond fresh, plastic concrete to clean, sound hardened concrete.

2. Bonding agent shall be Sikadur 32 Hi-Mod, by Sika Corporation, Lyndhurst, NJ or equal.

B. Repair Mortar

1. Repair mortar shall be a two-component, polymer-modified, cementitious, fast-setting, trowel grade, structural repair mortar suitable for use on horizontal, vertical and overhead surfaces, on grade, above and below grade on concrete and mortar.

2. Repair mortar shall be SikaTop 122 by Sika Corporation, Lyndhurst, NJ or equal.
   a. The polymer modified cementitious system shall consist of a factory preproportioned two-component system.
   b. The system shall not contain chlorides, nitrates, added gypsum, added lime, or high alumina cements. The system shall be non-combustible, either before or after cure.

C. Crack Sealant

1. Crack sealant shall be a two-component, solvent-free, moisture insensitive epoxy resin material suitable for crack grouting, by injection or gravity feed and as a binder for mortar, concrete or grout in thermally stable environments and as a concrete sealer.

2. Crack sealant shall be Sikadur 35 Hi-Mod LV, by Sika Corporation, Lyndhurst, NJ or equal.

D. Epoxy Paste Adhesive

1. General
   a. Epoxy paste adhesive shall be a two-component, solvent-free, moisture insensitive epoxy resin material suitable for an adhesive for mating surfaces where the glue line is 1/8-in or less and to bond fresh, plastic concrete to clean, sound, hardened concrete.
   b. The material shall be classified as Type I, Grade 3, Class B and C and a Type II, Grade 3, Class B and C adhesive in conformity to ASTM C881.

2. Epoxy paste adhesive shall be Sikadur 31 Hi-Mod Gel, by Sika Corporation, Lyndhurst, NJ or equal.

E. Special Joint Sealant

1. Sealant shall be foamed polyurethane strip saturated with polybutylene waterproofing material. Sealant shall be applied to joint in a precompressed state.

2. When compressed to 50 percent of its original volume, sealant shall produce a hydrostatic seal.

3. Sealant shall maintain its resiliency to temperatures as low as minus 40 degrees F. Sealant shall be waterproof (when compressed to 50 percent of its original volume) in temperatures from minus 40 degrees F to plus 200 degrees F.

4. Elongation shall be at least 325 percent with a tensile strength of not less than 53 psi. The polybutylene compound in the polyurethane strip shall not migrate.

F. Metal primer shall be an approved organic zinc rich primer containing 95 percent zinc dust by weight.

G. Epoxy Grout

1. Epoxy grout for setting new anchor bolts or rebar, in existing concrete shall be Hilti Hit-RE 500-SD or approved equal.

PART 3 EXECUTION

3.01 GENERAL

A. Concrete removal, repairs and fabrication shall be as shown on the Drawings and as specified herein.

B. Except as otherwise indicated, in all locations where new concrete is to be deposited against existing concrete, bonding compound shall be applied to the surfaces of the existing concrete prior to placement of new concrete.

C. In all cases where the joint between new concrete and existing concrete will be exposed in the finished work, except as otherwise shown or specified, the limit of concrete removal shall be defined by a 1-1/2-in deep saw cut on each exposed surface of the existing concrete.

D. When the finished surface is not specified to be coated, the color of new concrete in the exposed surfaces shall match the color of the existing adjoining concrete as closely as possible.

E. Where indicated or specified, existing concrete shall be removed to the depth indicated or required to expose sound concrete. The surface exposed shall be roughened by chipping, sandblasting, scarifying or other appropriate means before applying bonding compounds, or repair material as specified.

F. The Engineer may from time to time direct the Construction Contractor to make repairs to existing concrete, these repairs shall be made as specified herein or by such other methods as may be appropriate.

G. Reinforcing in existing concrete which is exposed as a result of removal of deteriorated concrete shall be wire brushed to remove all loose material and products of corrosion before proceeding with the repair.

H. All commercial products specified in this Section shall be stored, mixed and applied in strict accordance with the manufacturer's recommendations.

I. In all cases where concrete is repaired in the vicinity of an expansion joint or isolation joint the repairs shall be made so as to preserve the isolation between components on either side of the joint.

J. Where exposed embedded metal is required to be painted, prepare substrate as approved and paint with two coats zinc rich primer before installation of adjacent new materials.

3.02 SURFACE REPAIR AND PATCHING

A. Remove fractured, loose, deteriorated and unsound concrete by saw cutting, bush hammering, chipping or other appropriate means. Restore area to original limits or as shown using repair mortar.

3.03 EXPANSION JOINT REPAIR

A. Where indicated, existing premolded joint filler shall be removed and replaced with premolded joint filler as specified in Section 03250. Special joint sealant shall be installed as indicated in accordance with manufacturer's instructions.

3.04 CRACK REPAIR

A. Cracks on horizontal surfaces shall be repaired by gravity feeding crack sealant into cracks.

B. Cracks on vertical surfaces shall be repaired by pressure injecting crack sealant through polyethylene valves sealed to surface with epoxy paste adhesive.

3.05 ANCHOR BOLTS IN EXISTING CONCRETE

A. Drill holes in concrete of the size and to the depth indicated.

B. Clean concrete in accordance with manufacturer’s instructions.

C. Locate bolts in hole so as to provide the indicated embedment and projection.

D. Install bolts and epoxy in accordance with manufacturer.

END OF SECTION

© 2019 CDM Smith
All Rights Reserved

SECTION 05500
MISCELLANEOUS METAL

PART 1 GENERAL

1.01 SCOPE OF WORK

A. Furnish all labor, materials, equipment and incidentals required and install all miscellaneous metal complete as shown on the Drawings and as specified herein.

1.02 RELATED WORK

A. Concrete joint accessories are included in Section 03250.

B. Equipment anchor bolts are included in the respective Sections of Divisions 11, 13, 14 and 15.

1.03 SUBMITTALS

A. Submit, in accordance with Section 01300, shop drawings and product data showing materials of construction and details of installation for:

1. Shop drawings, showing sizes of members, method of assembly, anchorage and connection to other members.

B. Samples

1. Submit samples as requested by the Engineer during the course of construction.

C. Design Data

1. Submit calculations or test data demonstrating that the railings will resist the loads specified in the Florida Building Code and OSHA at the post spacing provided. Calculations shall be signed and sealed by a professional engineer registered in the State of Florida.

2. Submit calculations demonstrating that all anchors have been designed in accordance with the building code. All anchors into concrete shall be designed in accordance with ACI 318, Appendix D.

3. Submit manufacturer's load and deflection tables for grating.

D. Certificates

1. Submit certification that the railing system is in compliance with OSHA requirements and the Florida Building Code.

2. Certify that welders have been qualified under AWS, within the previous 12 months, to perform the welds required under this Section.

1.04 REFERENCE STANDARDS

A. Aluminum Association (AA)

1. AA M31C22A41
   a. M31: Mechanical Finish, Fine Satin
   b. C22: Finish, Medium Matte
   c. A41: Clear Anodic Coating, Class I

B. American Society for Testing and Materials (ASTM)

1. ASTM A36 - Standard Specification for Carbon Structural Steel.

2. ASTM A48 - Standard Specification for Gray Iron Castings.

3. ASTM A53 - Standard Specification for Pipe, Steel, Black and Hot-Dipped, Zinc-Coated, Welded and Seamless.

4. ASTM A108 - Standard Specification for Steel Bars, Carbon, Cold Finished, Standard Quality.

5. ASTM A123 - Standard Specification for Zinc (Hot-Dip Galvanized) Coatings on Iron and Steel Products.

6. ASTM A153 - Standard Specification for Zinc Coating (Hot-Dip) on Iron and Steel Hardware.

7. ASTM A240 - Standard Specification for Heat-Resisting Chromium and Chromium-Nickel Stainless Plate, Sheet, and Strip Pressure Vessels.

8. ASTM A276 - Standard Specification for Stainless Steel Bars and Shapes.

9. ASTM A307 - Standard Specification for Carbon Steel Bolts and Studs, 60,000 Psi Tensile Strength.

10. ASTM A325 - Standard Specification for Structural Bolts, Steel, Heat Treated, 120/105 ksi Minimum Tensile Strength.

11. ASTM A500 - Standard Specification for Cold-Formed Welded and Seamless Carbon Steel Structural Tubing in Rounds and Shapes.

12. ASTM A501 - Standard Specification for Hot-Formed Welded and Seamless Carbon Steel Structural Tubing.

13. ASTM A536 – Standard Specification for Ductile Iron Castings.

14. ASTM A570 - Standard Specification for Steel, Sheet and Strip, Carbon, Hot-Rolled, Structural Quality.

15. ASTM A1008 – Standard Specification for Steel, Sheet, Cold-Rolled, Carbon, Structural, High-Strength Low-Alloy, High-Strength Low-Alloy with Improved Formability, Solution Hardened, and Bake Hardenable.

16. ASTM B209 – Standard Specification for Aluminum and Aluminum-Alloy Sheet and Plate.

17. ASTM B221 – Standard Specification for Aluminum and Aluminum-Alloy Extruded Bars, Rods, Wire, Profiles and Tubes.

18. ASTM B429 – Standard Specification for Aluminum-Alloy Extruded Structural Pipe and Tube.

19. ASTM F1554 –Standard Specification for Anchor Bolts, Steel, 36, 55, and 105-ksi Yield Strength

20. ASTM F2329 – Specification for Zinc Coating, Hot-Dip, Requirements for Application to Carbon Screws, Washers, Nuts, and Special Threaded Fasteners

C. American Institute of Steel Construction (AISC)

1. Specification for Structural Steel Buildings – Allowable Stress Design and Plastic Design.

D. American Welding Society (AWS)

1. AWS D1.1 – Structural Welding Code - Steel.

2. AWS D1.2 – Structural Welding Code - Aluminum.

3. AWS D1.6 – Structural Welding Code - Stainless Steel

E. Federal Specifications

1. FS-FF-B-575C - Bolts, Hexagonal and Square

F. Occupational Safety and Health Administration (OSHA)

G. Where reference is made to one of the above standards, the revision in effect at the time of bid opening shall apply.

1.05 QUALITY ASSURANCE

A. The work of this Section shall be completely coordinated with the work of other Sections. Verify, at the site, both the dimensions and work of other trades adjoining items of work in this Section before fabrication and installation of items herein specified.

B. Furnish to the pertinent trades all items included under this Section that are to be built into the work of other Sections.

C. All welding shall be performed by qualified welders and shall conform to the applicable AWS welding code. Welding of steel shall conform to AWS D1.1 and welding of aluminum shall conform to AWS D1.2 and welding of stainless steel shall conform to AWS D1.6.

1.06 DELIVERY, STORAGE AND HANDLING

A. Deliver items to be incorporated into the work of other trades in sufficient time to be checked prior to installation.

B. Store materials on skids and not on the ground and block up so that they will not become bent or otherwise damaged. Handle materials with cranes or derricks. Do not dump material off cars or trucks nor handle in any other way that will cause damage.

C. Repair items that have become damage or corroded to the satisfaction of the Engineer prior to incorporating them into the work.

1.07 PROJECT/SITE REQUIREMENTS

A. Field measurements shall be taken at the site, prior to fabrication of items, to verify or supplement indicated dimensions and to ensure proper fitting of all items.

PART 2 PRODUCTS

2.01 GENERAL

A. The use of manufacturer's name and model or catalog number is for the purpose of establishing the standard of quality and general configuration desired.

B. Like items of materials shall be the end products of one manufacturer in order to provide standardization for appearance, maintenance and manufacturer's service.

2.02 MATERIALS

A. Unless otherwise noted, materials for miscellaneous metals shall conform to the following standards:

1.	Structural Steel Other shapes; plates; rods and bars: ASTM A36	Wide flange shapes: ASTM A992
2.	Structural Steel Tubing	ASTM A500, Grade B
3.	Welded and Seamless Steel Pipe	ASTM A501 or ASTM A53, Type E or S, Grade B Schedule 40. Use standard malleable iron fittings, galvanized for exterior work
4.	Steel Sheets	ASTM A1008
5.	Gray Iron Castings	ASTM A48, Class 35
6.	Ductile Iron Castings	ASTM A536, Grade 65-45-12

7. Aluminum Extruded Pipe	ASTM B429, Alloy 6063 T6 and Alloy 6061 T6 as indicated
8. Aluminum Extruded Shapes	ASTM B221, Alloy 6061 T6
9. Aluminum Sheet and Plate	ASTM B209, Alloy 6061 T6
10. Stainless Steel Plates, Sheets, and Structural Shapes	
a. Exterior, Submerged or Industrial Use	ASTM A240, Type 316 (Type 316L for welded)
b. Interior and Architectural Use	ASTM A240, Type 304
11. Stainless Steel Bolts, Nuts, and Washers	ASTM A276, Type 316
12. Carbon Steel Bolts and Studs	ASTM A307, Grade A (hot dip galvanized nuts and washers where noted)
13. High Strength Steel Bolts, Nuts and washers	ASTM A325 (mechanically galvanized per ASTM B695, Class 50, where noted)
a. Elevated Temperature Exposure	Type I
b. General Application	Type I or Type II
14. Galvanizing	ASTM A123, Zn w/0.05 percent minimum Ni
15. Galvanizing, hardware	ASTM A153, Zn w/0.05 percent minimum Ni
16. Galvanizing, anchor bolts	ASTM F2329, Zn w/0.05 percent minimum Ni
17. Welding electrodes, steel	AWS A5.1 E70xx

2.03 ANCHORS, BOLTS AND FASTENING DEVICES

A. Unless otherwise noted, anchor bolts shall be ASTM F1554, Grade 36. Provide standard headed bolts with heavy hex nuts and Grade A washers. Where galvanized anchor bolts are shown or specified, provide standard headed bolts with heavy hex nuts and Grade A washers, all galvanized in accordance with ASTM F2329.

B. Unless otherwise noted, bolts for the connection of carbon steel or iron shall be steel machine bolts; bolts for the connection of galvanized steel or iron shall be galvanized steel or stainless steel machine bolts; and bolts for the connection of aluminum or stainless steel shall be stainless steel machine bolts.

C. All anchors into concrete shall be designed in accordance with ACI 318 Appendix D.

D. Adhesive anchor system, for fastening to solid concrete substrate, shall be a system manufactured for the installation of post installed studs including anchoring hardware and chemical dispenser. Injection adhesive shall be a two-component epoxy system including a hardener and a resin, furnished in pre-measured side-by-side cartridges which keep the two components separate. Side-by-side cartridges shall be designed to accept a static mixing nozzle which thoroughly blends the two components and allows injection directly into the drilled hole. Provide zinc plated carbon steel or Type 316 stainless steel stud assemblies as indicated on the Drawings consisting of an all-thread anchor rod with nut and washer. Adhesive anchor system shall be Hilti RE 500 V3; Simpson Strong Tie SET-XP; ITW Ramset Red Head Epcon G5; or equal. Unless otherwise noted, anchorage designs shown on the Drawings are based on Hilti RE 500 V3.

E. Compound masonry expansion anchors shall be lead expansion sleeve type anchors complete with nuts and washers. Anchors shall be precision die-cast zinc alloy with a minimum of two lead alloy expansion sleeves. When the length or embedment of the bolt is not noted on the Drawings, provide length sufficient to place the wedge and expansion sleeve portion of the bolt at least 1-in behind the concrete reinforcing steel. Expansion anchors shall be Star Expansion Industries, Star Slugin or equal.

F. Adhesive anchors, for fastening to hollow concrete block or brick, or hollow-core precast concrete planks shall be a three-part stud, screen tube and chemical dispenser anchoring system. Adhesive cartridges shall contain pre-measured amounts of resin and hardener which are mixed and deposited in a screen tube by a dispenser. Provide zinc plated carbon steel or Type 316 stainless steel stud assemblies as indicated on the Drawings consisting of an all-thread anchor rod with nut and washer. Anchors shall be Hilti HIT HY-70 System; Powers Pure110+; Simpson ET-HP, or equal.

G. Automatic end welded headed anchor studs shall be flux ended studs made from cold drawn steel, ASTM A108 Grades C-1010 through C-1020. Headed anchor studs shall be Nelson, H4L Headed Concrete Anchors or equal.

H. Machine bolts and nuts shall conform to Federal Specification FF-B-575C. Bolts and nuts shall be hexagon type. Bolts, nuts, screws, washers and related appurtenances shall be Type 316 stainless steel.

I. Toggle bolts shall be Hilti, Toggler Bolt or equal.

2.04 LADDERS

A. Ladders, ladder accessories and ladder clearances shall conform to the requirements of OSHA.

B. Aluminum ladders shall be fabricated with Schedule 80, 1-1/2-in I.D. continuous extruded aluminum pipe side rails spaced a minimum 18-in apart. Rungs shall be fabricated from extruded aluminum shapes, alloy 6063-T5/T6, with a serrated tread, number A5680 by Washington Aluminum Company or equal spaced 12-in on center. Wall support brackets shall be aluminum 6061-T6 spaced 5-ft on center with Type 316 stainless steel fasteners. Where possible, the side rails shall be fastened to the floor with 1/2-in diameter Type 316 stainless steel expansion bolts.

C. Ladder cages shall be of aluminum construction by Aluminex, Inc. Model LC-100 or equal.

D. Provide a rigid fall prevention system at each ladder more than 20 feet high and as indicated on the Drawings.

1. The system shall consist of an aluminum or stainless steel vertical rigid rail, rail extension, stainless steel mounting hardware and fasteners, two non-corrosive metal sliding fall prevention devices, two stainless steel connecting straps, two full body harnesses with “D” rings, accessories and all other materials required for the complete installation and operation of the fall prevention system in accordance with the manufacturer’s recommendations.

2. Provide 36-in minimum height permanent aluminum or stainless steel rail extension compatible with the sliding fall prevention device to ensure worker is attached to the fall prevention system while mounting and dismounting from a platform or landing. Ladder extension may be removable at manholes, hatches, and roof scuttles. Provide stainless steel hardware and fasteners, accessories, and all other materials required for the complete installation to ladders in accordance with the manufacturer’s recommendations.

3. Provide alignment between successive pieces of rail. Provide allowance for expansion and contraction on long runs.

4. In addition to the “D” ring used for attachment to the sliding fall prevention device, the harness shall have at least two “D” rings for the attachment of safety straps and lanyards.

5. The fall prevention system shall be attached to ladders installed under this contract. The sliding fall prevention device shall move freely up and down the rail with the worker in the normal climbing position. The fall prevention system shall stop the fall of a worker independently from offset ladders, platforms or safety cages.

6. Conform to OSHA Regulation 1910.27 for fall prevention system. Rope and cable systems will not be allowed.

7. The fall prevention system shall be Saf-T-Climb by North Safety Products; TS Fall Prevention System by TS Products, Inc.; Glideloc System by Rose Manufacturing Company, or equal.

E. Ladder safety post extensions shall be provided on all fixed ladders 20 feet or less in height located below hatches and roof scuttles and as indicated on the Drawings. The aluminum telescoping tubular safety post extension shall lock in its vertical position and extend a minimum of 36-in above the opening and shall be secured to the ladder rungs with stainless steel fasteners and brackets. The ladder post extension shall be Ladder UP Safety Post, Model LU-4 by Bilco Co.; Series L1E Safety Extension by Halliday Products; Pull-up Bar by Access Manufacturing, or equal.

F. Ladder shields shall be "Ladder Gate" by Siebe Norton, Inc., Cerritos, CA or equal. The bottom of the ladder shield shall be 7-ft above finish grade.

G. Manhole rungs for cast-in-place concrete work shall be 12-3/4-in wide with a drop front design and a serrated step surface and comply with the requirements of OSHA. Type 316 stainless steel.

H. Ship ladders shall be of all aluminum construction. Treads shall have abrasive nosing as manufactured by Reliance Steel Products Co.; IKG Industries or equal.

2.05 ACCESS HATCHES

A. Access hatches shall have single or double leaf doors as indicated by the Drawings. The doors shall be 1/4-in aluminum diamond pattern plate with welded stiffeners, as necessary, to withstand a live load of 300 lbs/sq ft with a maximum deflection of 1/150th of the span or AASHTO H20 wheel load if indicated on the plans. Hatches shall have a 1/4-in aluminum channel frame with a perimeter anchor flange or strap anchors for concrete embedment around the perimeter. Unless otherwise noted on the Drawings, use pivot torsion bars for counterbalance or spring operators for easy operation along with automatic door hold open. Hardware shall be durable and corrosion resistant with Type 316 stainless steel hardware used throughout. Provide removable lock handle. Finish shall be the factory mill finish for aluminum doors and frames with bituminous coating on the exterior of the frames in contact with concrete. Hatches shall be watertight and have a 1-1/2-in drainage coupling to the channel frame. Access hatches shall be Types as indicated on the Drawings by Bilco Company, New Haven, CT or equal.

B. Prefabricated roof scuttles shall be single or double leaf type of the sizes shown on the Drawings or specified. Cover and curb shall be 14 gauge paint bond galvanized steel with a welded 3-in beaded flange. The cover shall have at least 1-in of insulation covered on the inside with a steel liner panel. Curb shall be at least 12-in in height with a flange having holes for bolts to firmly secure scuttle in place. Provide rigid insulation on the exterior of the curb at least 1-in in thickness. The insulation shall be fully covered by metal. The cover and curb perimeters shall be provided with a positive seal and entire scuttle shall be watertight. Supply spring operators for easy opening along with automatic cover hold open. Hardware shall be Type 316 stainless steel. Roof scuttles shall be the Types as indicated on the Drawings by Bilco Company, New Haven, CT or equal.

2.06 MISCELLANEOUS ALUMINUM

A. All miscellaneous metal work shall be formed true to detail, with clean, straight, sharply defined profiles and smooth surfaces of uniform color and texture and free from defects impairing strength or durability. Holes shall be drilled or punched. Edges shall be smooth and without burrs. Fabricate supplementary pieces necessary to complete each item though such pieces are not definitely shown or specified.

B. Connections and accessories shall be of sufficient strength to safely withstand the stresses and strains to which they will be subjected. Exposed joints shall be close fitting and jointed where least conspicuous. Threaded connections shall have the threads concealed where practical. Welded connections shall have continuous welds or intermittent welds as specified or shown. The face of welds shall be dressed flush and smooth. Welding shall be on the unexposed side as much as possible in order to prevent pitting or discoloration of the aluminum exposed surface. Provide holes for temporary field connections and for attachment of the work of other trades.

C. Miscellaneous aluminum items shall include: beams, angles, closure angles, grates, hatches, floor plates, stop plates, stair nosings and any other miscellaneous aluminum called for on the Drawings and not otherwise specified.

D. Angle frames for hatches, beams, grates, etc, shall be complete with welded strap anchors attached.

E. Aluminum diamond plate and floor plate shall have a minimum thickness of 3/8-in. Frames and supports shall be of aluminum construction. Fastening devices and hardware shall be Type 316 stainless steel. Plates shall have a mill finish.

F. Stair treads for aluminum stairs shall have abrasive non-slip nosing as approved.

G. Aluminum nosing at concrete stairs shall be Wooster Products, Inc.; Alumogrit Treads, Type 116; similar by Barry Pattern and Foundry Co.; Andco or equal. Furnish with wing type anchors and flat head stainless steel machine screws, 12-in on center. Nosing shall also be used at concrete ladder openings. Nosing shall a single piece for each step extending to within 3-in at each side of stair or full ladder width. Set nosing flush with stair tread finish at concrete stairs. Furnish treads with heavy duty protective tape cover.

H. Aluminum as specified on the design drawings shall be given an anodic oxide treatment in accordance with the AA M31C22A41. Other aluminum items shall have a cleaned and degreased mill finish.

2.07 MISCELLANEOUS STEEL

A. All miscellaneous metal work shall be formed true to detail, with clean, straight, sharply defined profiles and smooth surfaces of uniform color and texture and free from defects impairing strength or durability. Holes shall be drilled or punched. Edges shall be smooth and without burrs. Fabricate supplementary pieces necessary to complete each item though such pieces are not definitely shown or specified.

B. Connections and accessories shall be of sufficient strength to safely withstand the stresses and strains to which they will be subjected. Exposed joints shall be close fitting and jointed where least conspicuous. Threaded connections shall have the threads concealed where practical. Welded connections shall have continuous welds or intermittent welds as specified or shown. The face of welds shall be dressed flush and smooth. Provide holes for temporary field connections and for attachment of the work of other trades.

C. Miscellaneous steel items shall include: beams, angles, lintels, metal stairs, support brackets, base plates for other than structural steel or equipment, closure angles, bridge crane rails, monorail hoist beams, holddown straps and lugs, door frames, splice plates, subframing at roof openings and any other miscellaneous steel called for on the Drawings and not otherwise specified.

D. Structural steel angle and channel door frames shall be galvanized. Frames shall be fabricated with not less than three anchors on each jamb.

E. Steel pipe pieces for sleeves, lifting attachments and other functions shall be Schedule 40 pipe unless otherwise shown on the Drawings. Wall and floor sleeves, of steel pipe, shall have welded circumferential steel waterstops at mid-length.

F. Lintels, relief angles or other steel supporting masonry or embedded in masonry shall be galvanized.

G. All steel finish work shall be thoroughly cleaned, by effective means, of all loose mill scale, rust and foreign matter and shall be given one shop coat of primer compatible with the finish coat after fabrication but before shipment. Paint shall be omitted within 3-in of proposed field welds. Paint shall be applied to dry surfaces and shall be thoroughly and evenly spread and well worked into joints and other open spaces.

H. Galvanizing, where required, shall be the hot-dip zinc process after fabrication. Coating shall be not less than 2 oz/sq ft of surface.

2.08 MISCELLANEOUS STAINLESS STEEL

A. All miscellaneous metal work shall be formed true to detail, with clean, straight, sharply defined profiles and smooth surfaces of uniform color and texture and free from defects impairing strength or durability. Holes shall be drilled or punched. Edges shall be smooth and without burrs. Fabricate supplementary pieces necessary to complete each item though such pieces are not definitely shown or specified.

B. Connections and accessories shall be of sufficient strength to safely withstand the stresses and strains to which they will be subjected. Exposed joints shall be close fitting and jointed where least conspicuous. Threaded connections shall have the threads concealed where practical. Welded connections shall have continuous welds or intermittent welds as specified or shown. The face of welds shall be dressed flush and smooth. Provide holes for temporary field connections and for attachment of the work of other trades.

C. Miscellaneous stainless steel items shall include: beams, angles, bar racks and any other miscellaneous stainless steel called for on the Drawings and not otherwise specified.

2.09 CASTINGS

A. Casting shall be of good quality, strong, tough, even-grained, smooth, free from scale, lumps, blisters, sand holes and defects of any kind which render them unfit for the service for which they are intended. Castings shall be thoroughly cleaned and will be subjected to a hammer inspection in the field by the Engineer. All matching surfaces shall be machined to a true plane surface to allow contact surfaces to seat at all points without rocking. Allowances shall be made in the patterns so that the thickness specified shall not be reduced in obtaining finished surfaces. Castings will not be acceptable if the actual weight is less than 95 percent of the theoretical weight computed from dimensions. The Construction Contractor shall provide facilities for weighing castings in the presence of the Engineer.

B. Frames, covers, cast grates and trench drains for structures shall be gray iron castings except as otherwise specified or indicated on the Drawings. Sizes shall be as shown on the Drawings. Covers shall have letters "WATER," "SANITARY SEWER," or DRAIN," as applicable, embossed on top.

C. Frames and covers for installation in slabs shall be heavy duty, R-6099 Series as manufactured by Neenah Foundry Co., or equal.

D. Electrical and telephone manhole and handhole frames and covers for structures shall be ductile iron castings. The covers shall be watertight. Covers shall have the word "ELECTRIC," "HIGH VOLTAGE," "LOW VOLTAGE," "SIGNAL," "TELEPHONE," as applicable,

embossed on or cast into the top in letters 2-in high. The clear opening shall be 36-in unless otherwise indicated on the Drawings.

E. Trench drains shall be of the length shown on the Drawings and shall be heavy duty, R-4990 Series with a "Type A" cover as manufactured by Neenah Foundry Co. or equal.

PART 3 EXECUTION

3.01 INSTALLATION

A. Install all items except those to be embedded in concrete or other masonry which shall be installed under Division 3 and Division 4 respectively. Items to be attached to concrete or masonry after such work is completed shall be installed in accordance with the details shown. Fastening to wood plugs in masonry will not be permitted.

B. Abrasions in the shop primer shall be touched up immediately after erection. Areas left unprimed for welding shall be painted with primer after welding.

C. Zinc coating which has been burned by welding, abraded, or otherwise damaged shall be cleaned and repaired after installation. The damage area shall be thoroughly cleaned by wire brushing and all traces of welding flux and loose or cracked zinc coating removed prior to painting. The cleaned area shall be painted with two coats of zinc oxide-zinc dust paint conforming to the requirements of Military Specifications MIL-P-15145. The paint shall be properly compounded with a suitable vehicle in the ratio of one-part zinc oxide to four parts zinc dust by weight.

D. Specialty products shall be installed in accordance with the manufacturer's recommendations.

E. Expansion bolts shall be checked for tightness a minimum of 24 hours after initial installation.

F. Install adhesive anchor system in strict compliance with the manufacturer's recommendations, including drill bit diameter, surface preparation, temperature, injection and installation of bolts. Use oil free compressed air to blast out loose particles and dust from the drilled holes. Bolts must be clean and free of dirt, oil, grease, ice or other material which would reduce bond.

G. Headed anchor studs shall be welded in accordance with manufacturer's recommendations.

H. All railings shall be erected to line and plumb.

I. All steel surfaces that come into contact with exposed concrete or masonry shall receive a protective coating of an approved heavy bitumastic troweling mastic applied in accordance with the manufacturer's instructions prior to installation.

J. Where aluminum contacts a dissimilar metal, apply a heavy brush coat of zinc-chromate primer followed by two coats of aluminum metal and masonry paint to the dissimilar metal.

K. Where aluminum contacts masonry or concrete, apply a heavy coat of approved alkali resistant paint to the masonry or concrete.

L. Where aluminum contacts wood, apply two coats of aluminum metal and masonry paint to the wood.

M. Between aluminum gratings, aluminum stair treads, or aluminum handrail brackets and steel supports, insert 1/4-in thick neoprene isolator pads, 85 plus or minus 5 Shore A durometer, sized for full width and length of bracket or support.

END OF SECTION

© 2019 CDM Smith
All Rights Reserved

SECTION 06100
ROUGH CARPENTRY

PART 1 GENERAL

1.01 SCOPE OF WORK

A. Furnish all labor, materials, equipment and incidentals required and install rough carpentry complete as shown on the drawings and as specified herein.

1.02 SUBMITTALS

A. Submit, in accordance with Section 01300, detailed information on materials proposed and installation methods.

B. Product Data: For each type of process and factory-fabricated product. Indicate component materials and dimensions and include construction and application details.

1. Include data for wood-preservative treatment from chemical treatment manufacturer and certification by treating plant that treated materials comply with requirements. Indicate type of preservative used and net amount of preservative retained.

2. For products receiving a waterborne treatment, include statement that moisture content of treated materials was reduced to levels specified before shipment to Project site.

3. Include copies of warranties from chemical treatment manufacturers for each type of treatment.

1.03 REFERENCES

A. American Wood Protection Association (AWPA)

1. AWPA C2 - Lumber, Timber, Bridge Ties and Mine Ties - Preservative Treatment by Pressure Processes

2. AWPA M4 - Care of Preservative-Treated Wood Products

B. ASME International

1. ASME B18.2.1 - Square and Hex Bolts and Screws (Inch Series)

2. ASME B18.6.1 - Wood Screws (Inch Series)

C. ASTM International

1. ASTM A 153/A 153M - Specification for Zinc-Coating (Hot-Dip) of Iron and Steel Hardware

2. ASTM A 307 - Specification for Carbon Steel Bolts and Studs, 60 000 PSI Tensile Strength

3. ASTM A 563 - Specification for Carbon and Alloy Steel Nuts

4. ASTM B 633 - Specification for Electrodeposited Coatings of Zinc on Iron and Steel

5. ASTM E 488 - Test Methods for Strength of Anchors in Concrete and Masonry Elements

6. ASTM F 1667 - Specification for Driven Fasteners: Nails, Spikes, and Staples

D. ICC Evaluation Service, Inc.

1. NES NER-272 - Pneumatic or Mechanically Driven Staples, Nails, P-Nails and Allied Fasteners for Use in All Types of Building Construction

E. Southern Building Code Congress International, Inc.

1. Standard Building Code.

F. The Southern Pine Inspection Bureau

1. Standard Grading Rules for Southern Pine Lumber.

G. U.S. Department of Commerce, National Institute of Standards and Technology

1. DOC PS 20 - American Softwood Lumber Standard

H. Where reference is made to one of the above standards, the revision in effect at the time of bid opening shall apply.

1.04 DEFINITIONS

A. Dimension Lumber: Lumber of 2 inches nominal or greater but less than 5 inches nominal in least dimension.

B. Lumber grading agencies, and the abbreviations used to reference them, include the following:

1. NeLMA: Northeastern Lumber Manufacturers' Association.

2. NHLA: National Hardwood Lumber Association.

3. NLGA: National Lumber Grades Authority.

4. SPIB: The Southern Pine Inspection Bureau.

5. WCLIB: West Coast Lumber Inspection Bureau.

6. WWPA: Western Wood Products Association.

1.05 DELIVERY, STORAGE AND HANDLING

A. Stack lumber flat with spacers between each bundle to provide air circulation. Provide for air circulation around stacks and under coverings.

B. Deliver interior wood materials that are to be exposed to view only after building is enclosed and weatherproof, wet work other than painting is dry, and HVAC system is operating and maintaining temperature and humidity at occupancy levels.

PART 2 PRODUCTS

2.01 WOOD PRODUCTS, GENERAL

A. Lumber: DOC PS 20 and applicable rules of grading agencies indicated. If no grading agency is indicated, provide lumber that complies with the applicable rules of any rules-writing agency certified by the ALSC Board of Review. Provide lumber graded by an agency certified by the ALSC Board of Review to inspect and grade lumber under the rules indicated.

1. Factory mark each piece of lumber with grade stamp of grading agency.

2. Where nominal sizes are indicated, provide actual sizes required by DOC PS 20 for moisture content specified. Where actual sizes are indicated, they are minimum dressed sizes for dry lumber.

3. Provide dressed lumber, S4S, unless otherwise indicated.

2.02 WOOD-PRESERVATIVE-TREATED MATERIALS

A. Preservative Treatment by Pressure Process: AWPA C2

1. Preservative Chemicals: Acceptable to authorities having jurisdiction and containing no arsenic or chromium.

B. Kiln-dry lumber after treatment to a maximum moisture content of 19 percent. Do not use material that is warped or does not comply with requirements for untreated material.

C. Mark lumber with treatment quality mark of an inspection agency approved by the ALSC Board of Review.

D. Application: Treat all rough carpentry.

2.03 MISCELLANEOUS LUMBER

A. General: Provide miscellaneous lumber indicated and lumber for support or attachment of other construction.

B. For items of dimension lumber size, provide Construction or No. 2 grade lumber with 19 percent maximum moisture content of any species.

C. For blocking not used for attachment of other construction Utility, Stud, or No. 3 grade lumber of any species may be used provided that it is cut and selected to eliminate defects that will interfere with its attachment and purpose.

D. For blocking and nailers used for attachment of other construction, select and cut lumber to eliminate knots and other defects that will interfere with attachment of other work.

2.04 PLYWOOD BACKING PANELS

A. Telephone and Electrical Equipment Backing Panels: DOC PS 1, fire-retardant treated, in thickness indicated or, if not indicated, not less than 3/4-inch nominal thickness.

2.05 FASTENERS

A. General: Provide fasteners of size and type indicated that comply with requirements specified in this Article for material and manufacture.

1. Provide fasteners with hot-dip zinc coating complying with ASTM A 153/A 153M

B. Nails, Brads, and Staples: ASTM F 1667.

C. Power-Driven Fasteners: NES NER-272.

D. Wood Screws: ASME B18.6.1.

E. Screws for Fastening to Cold-Formed Metal Framing: ASTM C 954, except with wafer heads and reamer wings, length as recommended by screw manufacturer for material being fastened.

F. Lag Bolts: ASME B18.2.1.

G. Bolts: Steel bolts complying with ASTM A 307, Grade A; with ASTM A 563 hex nuts and, where indicated, flat washers.

H. Expansion Anchors: Anchor bolt and sleeve assembly of material indicated below with capability to sustain, without failure, a load equal to 6 times the load imposed when installed in unit masonry assemblies and equal to 4 times the load imposed when installed in concrete as determined by testing per ASTM E 488 conducted by a qualified independent testing and inspecting agency.

1. Material: Carbon-steel components, zinc plated to comply with ASTM B 633, Class Fe/Zn 5.

PART 3 EXECUTION

3.01 INSTALLATION, GENERAL

A. Set carpentry to required levels and lines, with members plumb, true to line, cut, and fitted. Fit carpentry to other construction; scribe and cope as needed for accurate fit. Locate furring, nailers, blocking, and similar supports to comply with requirements for attaching other construction.

B. Where wood-preservative-treated lumber is installed adjacent to metal decking, install continuous flexible flashing separator between wood and metal decking.

C. Sort and select lumber so that natural characteristics will not interfere with installation or with fastening other materials to lumber. Do not use materials with defects that interfere with function of member or pieces that are too small to use with minimum number of joints or optimum joint arrangement.

D. Comply with AWPA M4 for applying field treatment to cut surfaces of preservative-treated lumber.

1. Use inorganic boron for items that are continuously protected from liquid water.

2. Use copper naphthenate for items not continuously protected from liquid water.

E. Securely attach carpentry work to substrate by anchoring and fastening as indicated.

F. Use common wire nails, unless otherwise indicated. Select fasteners of size that will not fully penetrate members where opposite side will be exposed to view or will receive finish materials. Make tight connections between members. Install fasteners without splitting wood; do not countersink nail heads, unless otherwise indicated.

3.02 WOOD BLOCKING INSTALLATION

A. Install where indicated and where required for attaching other work. Form to shapes indicated and cut as required for true line and level of attached work. Coordinate locations with other work involved.

B. Attach items to substrates to support applied loading. Recess bolts and nuts flush with surfaces, unless otherwise indicated.

C. Provide permanent grounds of dressed, pressure-preservative-treated, key-beveled lumber not less than 1-1/2 inches wide and of thickness required to bring face of ground to exact thickness of finish material. Remove temporary grounds when no longer required.

3.03 PROTECTION

A. Protect wood that has been treated with inorganic boron (SBX) from weather. If, despite protection, inorganic boron-treated wood becomes wet, apply EPA-registered borate treatment. Apply borate solution by spraying to comply with EPA-registered label.

B. Protect rough carpentry from weather. If, despite protection, rough carpentry becomes wet, apply EPA-registered borate treatment. Apply borate solution by spraying to comply with EPA-registered label.

END OF SECTION

THIS PAGE INTENTIONALLY LEFT BLANK

© 2019 CDM Smith
All Rights Reserved

SECTION 07920
JOINT SEALANTS

PART 1 GENERAL

1.01 SCOPE OF WORK

A. Furnish all labor, materials, equipment and incidentals required to complete joint sealants as shown on the drawings and as specified herein.

B. Section Includes:

1. Nonstaining silicone joint sealants.

1.02 RELATED WORK

A. Sealing joints in paved roads, parking lots, walkways, and curbing are included in Division 02.

1.03 REFERENCES

A. ASTM International

1. ASTM C 794 - Test Method for Adhesion-in-Peel of Elastomeric Joint Sealants

2. ASTM C 834 - Specification for Latex Sealants

3. ASTM C 920 - Specification for Elastomeric Joint Sealants

4. ASTM C 1021 - Practice for Laboratories Engaged in Testing of Building Sealants

5. ASTM C 1087 - Test Method for Determining Compatibility of Liquid-Applied Sealants with Accessories Used in Structural Glazing Systems

6. ASTM C 1193 - Guide for Use of Joint Sealants

7. ASTM C 1247 - Test Method for Durability of Sealants Exposed to Continuous Immersion in Liquids

8. ASTM C 1248 - Test Method for Staining of Porous Substrate by Joint Sealants

9. ASTM C 1311 - Specification for Solvent Release Sealants

10. ASTM C 1330 - Specification for Cylindrical Sealant Backing for Use with Cold Liquid Applied Sealants

11. ASTM C 1521 - for Evaluating Adhesion of Installed Weatherproofing Sealant Joints

B. Where reference is made to one of the above standards, the revision in effect at the time of bid opening shall apply.

1.04 SUBMITTALS

A. Provide in accordance with Section 01300.

B. Product Data: For each joint-sealant product.

C. Samples: Manufacturer's color charts consisting of strips of cured sealants showing the full range of colors available for each product exposed to view.

1.05 INFORMATIONAL SUBMITTALS

A. Qualification Data: For qualified testing agency.

B. Product Test Reports: For each kind of joint sealant, for tests performed by a qualified testing agency.

C. Sample Warranties: For special warranties.

1.06 QUALITY ASSURANCE

A. Installer Qualifications: An authorized representative who is trained and approved by manufacturer.

B. Product Testing: Test joint sealants using a qualified testing agency.

1. Testing Agency Qualifications: Qualified according to ASTM C 1021 to conduct the testing indicated.

1.07 FIELD CONDITIONS

A. Do not proceed with installation of joint sealants under the following conditions:

1. When ambient and substrate temperature conditions are outside limits permitted by joint-sealant manufacturer or are below 40 deg F.

2. When joint substrates are wet.

3. Where joint widths are less than those allowed by joint-sealant manufacturer for applications indicated.

4. Where contaminants capable of interfering with adhesion have not yet been removed from joint substrates.

1.08 WARRANTY

A. Special Installer's Warranty: Installer agrees to repair or replace joint sealants that do not comply with performance and other requirements specified in this Section within specified warranty period.

1. Warranty Period: Two years from date of Substantial Completion.

B. Special Manufacturer's Warranty: Manufacturer agrees to furnish joint sealants to repair or replace those joint sealants that do not comply with performance and other requirements specified in this Section within specified warranty period.

1. Warranty Period: Five years from date of Substantial Completion.

C. Special warranties specified in this article exclude deterioration or failure of joint sealants from the following:

1. Movement of the structure caused by stresses on the sealant exceeding sealant manufacturer's written specifications for sealant elongation and compression.

2. Disintegration of joint substrates from causes exceeding design specifications.

3. Mechanical damage caused by individuals, tools, or other outside agents.

4. Changes in sealant appearance caused by accumulation of dirt or other atmospheric contaminants.

PART 2 PRODUCTS

2.01 JOINT SEALANTS, GENERAL

A. Compatibility: Provide joint sealants, backings, and other related materials that are compatible with one another and with joint substrates under conditions of service and application, as demonstrated by joint-sealant manufacturer, based on testing and field experience.

B. Colors of Exposed Joint Sealants: As selected by Engineer from manufacturer's full range.

2.02 NONSTAINING SILICONE JOINT SEALANTS

A. Nonstaining Joint Sealants: No staining of substrates when tested according to ASTM C 1248.

B. Silicone, Nonstaining, S, NS, 50, NT: Nonstaining, single-component, nonsag, plus 50 percent and minus 50 percent movement capability, nontraffic-use, neutral-curing silicone joint sealant; ASTM C 920, Type S, Grade NS, Class 50, Use NT.

1. Products: Provide one of the following:
   a. Dow Corning Corporation; 756 SMS.
   b. GE Construction Sealants; SilPruf NB.
   c. May National Associates, Inc., a subsidiary of Sika Corporation U.S.; Bondaflex Sil 295 FPS NB.
   d. Pecora Corporation; 864NST.
   e. Tremco Incorporated; Spectrem 2.
   f. Or equal.

2.03 JOINT-SEALANT BACKING

A. Sealant Backing Material, General: Nonstaining; compatible with joint substrates, sealants, primers, and other joint fillers; and approved for applications indicated by sealant manufacturer based on field experience and laboratory testing.

1. Manufacturers: Provide products by the following:
   a. BASF Construction Chemicals, LLC, Building Systems.
   b. Construction Foam Products, a division of Nomaco, Inc.
   c. Or equal.

B. Cylindrical Sealant Backings: ASTM C 1330, Type C (closed-cell material with a surface skin) or any of the preceding types, as approved in writing by joint-sealant manufacturer for joint application indicated, and of size and density to control sealant depth and otherwise contribute to producing optimum sealant performance.

C. Bond-Breaker Tape: Polyethylene tape or other plastic tape recommended by sealant manufacturer for preventing sealant from adhering to rigid, inflexible joint-filler materials or joint surfaces at back of joint. Provide self-adhesive tape where applicable.

2.04 MISCELLANEOUS MATERIALS

A. Primer: Material recommended by joint-sealant manufacturer where required for adhesion of sealant to joint substrates indicated, as determined from preconstruction joint-sealant-substrate tests and field tests.

B. Cleaners for Nonporous Surfaces: Chemical cleaners acceptable to manufacturers of sealants and sealant backing materials, free of oily residues or other substances capable of staining or harming joint substrates and adjacent nonporous surfaces in any way, and formulated to promote optimum adhesion of sealants to joint substrates.

C. Masking Tape: Nonstaining, nonabsorbent material compatible with joint sealants and surfaces adjacent to joints.

PART 3 EXECUTION

3.01 EXAMINATION

A. Examine joints indicated to receive joint sealants, with Installer present, for compliance with requirements for joint configuration, installation tolerances, and other conditions affecting performance of the Work.

B. Proceed with installation only after unsatisfactory conditions have been corrected.

3.02 PREPARATION

A. Surface Cleaning of Joints: Clean out joints immediately before installing joint sealants to comply with joint-sealant manufacturer's written instructions and the following requirements:

1. Remove all foreign material from joint substrates that could interfere with adhesion of joint sealant, including dust, paints (except for permanent, protective coatings tested and approved for sealant adhesion and compatibility by sealant manufacturer), old joint sealants, oil, grease, waterproofing, water repellents, water, surface dirt, and frost.

2. Clean porous joint substrate surfaces by brushing, grinding, mechanical abrading, or a combination of these methods to produce a clean, sound substrate capable of developing optimum bond with joint sealants. Remove loose particles remaining after cleaning

operations above by vacuuming or blowing out joints with oil-free compressed air. Porous joint substrates include the following:
a. Concrete.

3. Remove laitance and form-release agents from concrete.

4. Clean nonporous joint substrate surfaces with chemical cleaners or other means that do not stain, harm substrates, or leave residues capable of interfering with adhesion of joint sealants. Nonporous joint substrates include the following:
a. Metal.
b. Glass.

B. Joint Priming: Prime joint substrates where recommended by joint-sealant manufacturer or as indicated by preconstruction joint-sealant-substrate tests or prior experience. Apply primer to comply with joint-sealant manufacturer's written instructions. Confine primers to areas of joint-sealant bond; do not allow spillage or migration onto adjoining surfaces.

C. Masking Tape: Use masking tape where required to prevent contact of sealant or primer with adjoining surfaces that otherwise would be permanently stained or damaged by such contact or by cleaning methods required to remove sealant smears. Remove tape immediately after tooling without disturbing joint seal.

3.03 INSTALLATION OF JOINT SEALANTS

A. General: Comply with joint-sealant manufacturer's written installation instructions for products and applications indicated, unless more stringent requirements apply.

B. Sealant Installation Standard: Comply with recommendations in ASTM C 1193 for use of joint sealants as applicable to materials, applications, and conditions indicated.

C. Install sealant backings of kind indicated to support sealants during application and at position required to produce cross-sectional shapes and depths of installed sealants relative to joint widths that allow optimum sealant movement capability.

1. Do not leave gaps between ends of sealant backings.

2. Do not stretch, twist, puncture, or tear sealant backings.

3. Remove absorbent sealant backings that have become wet before sealant application, and replace them with dry materials.

D. Install bond-breaker tape behind sealants where sealant backings are not used between sealants and backs of joints.

E. Install sealants using proven techniques that comply with the following and at the same time backings are installed:

1. Place sealants so they directly contact and fully wet joint substrates.

2. Completely fill recesses in each joint configuration.

3. Produce uniform, cross-sectional shapes and depths relative to joint widths that allow optimum sealant movement capability.

F. Tooling of Nonsag Sealants: Immediately after sealant application and before skinning or curing begins, tool sealants according to requirements specified in subparagraphs below to form smooth, uniform beads of configuration indicated; to eliminate air pockets; and to ensure contact and adhesion of sealant with sides of joint.

1. Remove excess sealant from surfaces adjacent to joints.

2. Use tooling agents that are approved in writing by sealant manufacturer and that do not discolor sealants or adjacent surfaces.

3. Provide concave joint profile per Figure 8A in ASTM C 1193 unless otherwise indicated.

3.04 CLEANING

A. Clean off excess sealant or sealant smears adjacent to joints as the Work progresses by methods and with cleaning materials approved in writing by manufacturers of joint sealants and of products in which joints occur.

3.05 PROTECTION

A. Protect joint sealants during and after curing period from contact with contaminating substances and from damage resulting from construction operations or other causes so sealants are without deterioration or damage at time of Substantial Completion. If, despite such protection, damage or deterioration occurs, cut out, remove, and repair damaged or deteriorated joint sealants immediately so installations with repaired areas are indistinguishable from original work.

END OF SECTION

© 2019 CDM Smith
All Rights Reserved

SECTION 08220
FIBERGLASS REINFORCED PLASTIC DOORS AND ALUMINUM FRAMES

PART 1 GENERAL

1.01 SCOPE OF WORK

A. Furnish all labor, materials, equipment, and incidentals required and deliver fiberglass reinforced plastic (FRP) doors and Aluminum frames, with appurtenances as shown, as scheduled, and as herein specified.

B. Installation is included in Section 06100 but as specified and shown on shop drawings as submitted herein.

1.02 RELATED WORK

A. Rough carpentry is included in Section 06100.

B. Door hardware is included in Section 08710.

1.03 SUBMITTALS

A. Submit, in accordance with Section 01300, complete shop drawings, working drawings, and product data for all materials furnished under this Section.

1. Product Data: For each type of product indicated. Include construction details, material descriptions, dimensions of individual components and profiles, and finishes for aluminum-framed systems.

2. Shop Drawings: Include plans, elevations, sections, details, and attachments to other work.

3. Samples: For each type of exposed finish required, in manufacturer's standard sizes.

4. Product Test Reports: Based on evaluation of comprehensive tests performed by a qualified testing agency, indicating compliance with performance requirements.

5. Provide copy of current, valid statewide product approval for product, material or system as shown on the drawings and as specified in this section, in accordance with Rule 9N-3. Product approval shall be for the specific manufacturer, product type, model or style, and the State Approval Number. The successful Contractor, the Contractor shall be responsible to file the appropriate Product Approval information with the local authority having jurisdiction.

6. Hardware templates shall be furnished to the door manufacturer by the Contractor for correct hardware alignment and reinforcing.

1.04 REFERENCES

A. Aluminum Association (AA)

1. AA DAF-45 - Designation System for Aluminum Finishes

B. American Architectural Manufacturers Association (AAMA)

1. AAMA 611 - Voluntary Specification for Anodized Architectural Aluminum

C. ASTM International

1. ASTM A 36/A 36M - Standard Specification for Carbon Structural Steel

2. ASTM B 209 - Aluminum and Aluminum-Alloy Sheet and Plate

3. ASTM B 221 - Aluminum and Aluminum-Alloy Extruded Bars, Rods, Wire, Profiles, and Tubes

4. ASTM A 153/A 153M - Specification for Zinc Coating (Hot-Dip) on Iron and Steel Hardware

5. ASTM A 653/A 653M - Specification for Steel Sheet, Zinc-Coated (Galvanized) or Zinc-Iron Alloy-Coated (Galvannealed) by the Hot-Dip Process

6. ASTM A 879/A 879M - Specification for Steel Sheet, Zinc Coated by the Electrolytic Process for Applications Requiring Designation of the Coating Mass on Each Surface

7. ASTM A 1008/A 1008M - Specification for Steel, Sheet, Cold-Rolled, Carbon, Structural, High-Strength Low-Alloy, High-Strength Low-Alloy with Improved Formability, Solution Hardened, and Bake Hardenable

8. ASTM A 1011/A 1011M - Specification for Steel, Sheet and Strip, Hot Rolled, Carbon, Structural, High-Strength Low-Alloy, High-Strength Low-Alloy with Improved Formability, and Ultra-High Strength

D. Builders Hardware Manufacturers Association

1. BHMA A156.115 - Hardware Preparation in Steel Doors and Steel Frames (ANSI)

E. Underwriters Laboratories Inc.

1. UL 1784 - Air Leakage Tests for Door Assemblies

F. Where reference is made to one of the above standards, the revision in effect at the time of bid opening shall apply.

1.05 QUALITY ASSURANCE

A. Fabricator Qualifications: Shop that employs skilled workers who fabricate FRP doors and Aluminum frames similar to that required for this Project and whose products have a record of successful in-service performance.

B. Installer Qualifications: Manufacturer's authorized representative who is trained and approved for installation of units required for this Project.

C. Provide FRP door and Aluminum frame components manufactured by a single firm specializing in this type of work, unless otherwise acceptable to the Engineer.

1.06 COORDINATION

A. Coordinate anchorage installation for Aluminum frames. Furnish setting drawings, templates, and directions for installing anchorages, including sleeves, concrete inserts, anchor bolts, and items with integral anchors. Deliver such items to Project site in time for installation.

1.07 WARRANTY

A. Special Warranty: Manufacturer's standard form in which manufacturer agrees to repair or replace components of aluminum-framed systems that do not comply with requirements or that fail in materials or workmanship within specified warranty period.

1. Failures include, but are not limited to, the following:
   a. Structural failures including, but not limited to, excessive deflection.
   b. Deterioration of metals, metal finishes, and other materials beyond normal weathering.

2. Warranty Period: 10 years from date of Substantial Completion.

B. Special Finish Warranty: Manufacturer's standard form in which manufacturer agrees to repair or replace components on which finishes do not comply with requirements or that fail in materials or workmanship within specified warranty period. Warranty does not include normal weathering.

1. Warranty Period: 10 years from date of Substantial Completion.

1.08 REGULATORY REQUIREMENTS

A. The products, materials and assemblies, including anchorage, proposed for the work of this Section shall comply with project specific calculated design pressures and the Florida Building Code (Code), including wind-borne debris region requirements, and shall be designed by the Manufacturer and installed by the Contractor to meet these requirements. Refer to project design pressures in the components and cladding table on the structural drawings. Where a conflict occurs between the requirements of this Specification and the Code, the more stringent requirement shall apply.

B. It shall be the responsibility of the contractor to provide evidence of code compliance for the products, materials and assemblies, including anchorage specified in this section. Evidence of code compliance shall be demonstrated by compliance with the Florida Building Code, using one of the methods outlined in Chapter 9N-3 of the Florida Administrative Code, Department of Community Affairs, Florida Building Commission, Product Approval.

1.09 DELIVERY, STORAGE AND HANDLING

A. All doors and frames shall be shipped with trim and all necessary items which may be required for final installation.

B. All materials shall be delivered to the site in sealed, undamaged containers fully identified with manufacturer's name, brand, style, pattern, and color. Upon delivery to job site, materials shall be stored in original cartons, on end in such a way to prevent falling or damage to face, corners, or edges.

PART 2 PRODUCTS

2.01 MANUFACTURERS

A. FRP components shall be by Curries ASSA Abloy; or equal products not accepted for this item.

2.02 NON-RATED OPENINGS

A. FRP Doors

1. Face Sheets – Class “C” Seamless fiberglass reinforced polyester plastic skin, 0.12-in thick.

2. Internal Stiles and Rails - Structural fiberglass reinforced plastic with solid polymer corner reinforcement.

3. Core - Polyurethane, 1-1/2-in thick, U factor - 0.14.

4. Hardware Reinforcement - Solid polymer.

5. Intermediate Framing - Supply structural FRP as and where required for door integrity.

6. Chemically weld entire door.

7. Polyester gel-coat entire door following hardware machining, 15 mils plus/minus 3 mils, dry film thickness.

Exposed Finish - Gel Coat as selected by Engineer from manufacturer's full range. To match specified color for aluminum frames.

B. Aluminum Frames

1. Materials - Aluminum Alloy 6063 – T6.

2. Construction – Extruded.

3. Exposed Finish – Color Anodic Finish: AAMA 611, AA-M12C22A42/A44, Class I, 0.018 mm or thicker.
   a. Color: As selected by Engineer from full range of industry colors and color densities. To match specified color for FRP doors.

2.03 FRAME ANCHORS

A. Jamb Anchors:

1. Stud-Wall Type: Designed to engage stud, welded to back of frames; not less than 0.042 inch thick.

2. Compression Type for Drywall Slip-on Frames: Adjustable compression anchors.

B. Floor Anchors: Formed from same material as frames, minimum thickness of 0.042 inch and as follows:

1. Monolithic Concrete Slabs: Clip-type anchors, with two holes to receive fasteners.

2. Separate Topping Concrete Slabs: Adjustable-type anchors with extension clips, allowing not less than 2-inch height adjustment. Terminate bottom of frames at finish floor surface.

2.04 FABRICATION

A. FRP Doors:

1. Steel-Stiffened Door Cores: Provide minimum thickness 0.026 inch, steel vertical stiffeners of same material as face sheets extending full-door height, with vertical webs spaced not more than 6 inches apart. Spot weld to face sheets no more than 5 inches o.c. Fill spaces between stiffeners with glass- or mineral-fiber insulation.

2. Vertical Edges for Single-Acting Doors: Provide beveled or square edges at manufacturer's discretion.

3. Top Edge Closures: Close top edges of doors with flush closures of same material as face sheets.

4. Bottom Edge Closures: Close bottom edges of doors with end closures or channels of same material as face sheets.

B. Aluminum Frames: Extruded aluminum shapes with contours approximately as indicated. Use countersunk stainless steel Phillips screws for exposed fastenings, and space not more than 12 inches on center. Mill joints in frame members to a hairline fit, reinforce, and secure mechanically.

1. Construction: Non-thermal at interior locations; thermally broken at exterior locations.

C. Fabricate concealed stiffeners and edge channels from either cold- or hot-rolled steel sheet.

D. Hardware Preparation: Factory prepare door and frame work to receive templated mortised hardware; include cutouts, reinforcement, mortising, drilling, and tapping according to SDI A250.6, the Door Hardware Schedule, and templates.

1. Reinforce doors and frames to receive non-templated, mortised, and surface-mounted door hardware.

PART 3 EXECUTION

3.01 EXAMINATION

A. Examine substrates, areas, and conditions, with Installer present, for compliance with requirements for installation tolerances and other conditions affecting performance of the Work.

B. Examine roughing-in for embedded and built-in anchors to verify actual locations before frame installation.

C. Prepare written report, endorsed by Installer, listing conditions detrimental to performance of the Work.

D. Proceed with installation only after unsatisfactory conditions have been corrected.

3.02 PREPARATION

A. Remove welded-in shipping spreaders installed at factory. Restore exposed finish by grinding, filling, and dressing, as required to make repaired area smooth, flush, and invisible on exposed faces.

B. Drill and tap doors and frames to receive non-templated, mortised, and surface-mounted door hardware.

3.03 INSTALLATION

A. General:

1. Comply with manufacturer's written instructions.

2. Do not install damaged components.

3. Fit joints to produce hairline joints free of burrs and distortion.

4. Rigidly secure non-movement joints.

5. Install anchors with separators and isolators to prevent metal corrosion and electrolytic deterioration.

6. Seal joints watertight unless otherwise indicated.

B. General: Install aluminum and FRP work plumb, rigid, properly aligned, and securely fastened in place. Comply with Drawings and manufacturer's written instructions.

C. Metal Protection:

1. Where aluminum will contact dissimilar metals, protect against galvanic action by painting contact surfaces with primer or applying sealant or tape, or by installing nonconductive spacers as recommended by manufacturer for this purpose.

D. Install components to drain water passing joints, condensation occurring within framing members, and moisture migrating within the system to exterior.

E. Set continuous sill members and flashing in full sealant bed to produce weathertight installation.

F. Install components plumb and true in alignment with established lines and grades, and without warp or rack.

G. Aluminum Frames: Install aluminum frames of size and profile indicated.

1. Set frames accurately in position; plumbed, aligned, and braced securely until permanent anchors are set. After wall construction is complete, remove temporary braces, leaving surfaces smooth and undamaged.
   a. Where frames are fabricated in sections because of shipping or handling limitations, field splice at approved locations by welding face joint continuously; grind, fill, dress, and make splice smooth, flush, and invisible on exposed faces.
   b. Install frames with removable stops located on secure side of opening.
   c. Install door silencers in frames before grouting.
   d. Remove temporary braces necessary for installation only after frames have been properly set and secured.
   e. Check plumb, square, and twist of frames as walls are constructed. Shim as necessary to comply with installation tolerances.
   f. Field apply bituminous coating to backs of frames that will be filled with grout containing antifreezing agents.

2. Floor Anchors: Provide floor anchors for each jamb and mullion that extends to floor, and secure with post-installed expansion anchors.
   a. Floor anchors may be set with power-actuated fasteners instead of post-installed expansion anchors if so indicated and approved on Shop Drawings.

3. In-Place Metal Partitions: Secure slip-on drywall frames in place according to manufacturer's written instructions.

4. Installation Tolerances: Adjust door frames for squareness, alignment, twist, and plumb to the following tolerances:
   a. Squareness: Plus or minus 1/16 inch, measured at door rabbet on a line 90 degrees from jamb perpendicular to frame head.
   b. Alignment: Plus or minus 1/16 inch, measured at jambs on a horizontal line parallel to plane of wall.
   c. Twist: Plus or minus 1/16 inch, measured at opposite face corners of jambs on parallel lines, and perpendicular to plane of wall.
   d. Plumbness: Plus or minus 1/16 inch, measured at jambs at floor.

H. FRP Doors: Fit FRP doors accurately in frames, within clearances specified below. Shim as necessary.

1. Non-Fire-Rated Steel Doors:
   a. Between Door and Frame Jambs and Head: 1/8 inch plus or minus 1/32 inch.
   b. At Bottom of Door: 3/4 inch plus or minus 1/32 inch.
   c. Between Door Face and Stop: 1/16 inch to 1/8 inch plus or minus 1/32 inch.

I. Secure stops with countersunk flat- or oval-head machine screws spaced uniformly not more than 9 inches o.c. and not more than 2 inches o.c. from each corner.

3.04 ADJUSTING AND CLEANING

A. Final Adjustments: Check and readjust operating hardware items immediately before final inspection. Leave work in complete and proper operating condition. Remove and replace defective work, including work that is warped, bowed, or otherwise unacceptable.

B. Remove grout and other bonding material from work immediately after installation.

C. Prime-Coat Touchup: Immediately after erection, sand smooth rusted or damaged areas of prime coat and apply touchup of compatible air-drying, rust-inhibitive primer.

D. Metallic-Coated Surface Touchup: Clean abraded areas and repair with galvanizing repair paint according to manufacturer's written instructions.

E. Touchup Painting: Cleaning and touchup painting of abraded areas of paint are specified in painting Sections.

END OF SECTION

© 2019 CDM Smith
All Rights Reserved

SECTION 08710
DOOR HARDWARE

PART 1 GENERAL

1.01 SCOPE OF WORK

A. Furnish all labor, materials, equipment and incidentals required and design and deliver door hardware for the Project as shown on the Drawings and as specified herein.

1.02 RELATED WORK

A. FRP Doors and Aluminum Frames are included in Section 08220.

1.03 SUBMITTALS

A. Submit, in accordance with Section 01300.

B. Product Data: Include construction and installation details, material descriptions, dimensions of individual components and profiles, and finishes.

C. Qualification Data: For Architectural Hardware Consultant.

D. Maintenance Data: For each type of door hardware to include in maintenance manuals. Include final hardware and keying schedule.

E. Warranty: Special warranty specified in this Section.

F. Other Action Submittals:

1. Door Hardware Sets: Prepared by or under the supervision of an Architectural Hardware Consultant, detailing fabrication and assembly of door hardware, as well as procedures and diagrams. Coordinate the final door hardware sets with doors, frames, and related work to ensure proper size, thickness, hand, function, and finish of door hardware.
   a. Format: Comply with scheduling sequence and vertical format in DHI's "Sequence and Format for the Hardware Schedule." Double space entries, and number and date each page and use same door numbers as indicated.
   b. Content: Include the following information:
      1) Identification number, location, hand, fire rating, and material of each door and frame.
      2) Type, style, function, size, quantity, and finish of each door hardware item. Include description and function of each lockset and exit device.
      3) Complete designations of every item required for each door or opening including name and manufacturer.
      4) Fastenings and other pertinent information.
      5) Location of each door hardware set, cross-referenced to Drawings, both on floor plans and in door and frame schedule.
      6) Explanation of abbreviations, symbols, and codes contained in schedule.
      7) Mounting locations for door hardware.
      8) Door and frame sizes and materials.
      9) List of related door devices specified in other Sections for each door and frame.

c. Submittal Sequence: Submit the final door hardware sets at earliest possible date, particularly where approval of the door hardware sets must precede fabrication of other work that is critical in Project construction schedule. Include Product Data, Samples, Shop Drawings of other work affected by door hardware, and other information essential to the coordinated review of the door hardware sets.

2. Keying Schedule: Prepared by or under the supervision of Architectural Hardware Consultant, detailing Owner's final keying instructions for locks. Include schematic keying diagram and index each key set to unique door designations.

1.04 REFERENCE STANDARDS

A. American Architectural Manufacturers Association

1. AAMA 701/702 - Voluntary Specifications for Pile Weatherstripping and Replaceable Fenestration Weatherseals

B. American National Standards Institute

1. ANSI A250.6 - Hardware for Standard Steel Doors (Reinforcement - Application)

C. ASTM International

1. ASTM D 2000 - Classification System for Rubber Products in Automotive Applications

2. ASTM E 283 - Test Method for Determining the Rate of Air Leakage through Exterior Windows, Curtain Walls, and Doors under Specified Pressure Differences across the Specimen

D. Builders Hardware Manufacturers Association

1. BHMA A156.1 - Butts and Hinges (ANSI)

2. BHMA A156.4 - Door Controls - Closers (ANSI)

3. BHMA A156.6 - Architectural Door Trim (ANSI)

4. BHMA A156.7 - Template Hinge Dimensions (ANSI)

5. BHMA A156.16 - Auxiliary Hardware (ANSI)

6. BHMA A156.18 - Materials and Finishes (ANSI)

7. BHMA A156.21 - Thresholds (ANSI)

8. BHMA A156.22 - Door Gasketing and Edge Seal Systems (ANSI)

9. Certified Product Directory.

E. Door and Hardware Institute

1. DHI A115 Series - Specifications for Steel Door and Frame Preparation for Hardware (ANSI)

2. Recommended Locations for Builders' Hardware for Custom Steel Doors and Frames.

3. Sequence and Format for the Hardware Schedule.

F. Where reference is made to one of the above or other referenced standards, the revisions in effect at the time of bid opening shall apply.

1.05 QUALITY ASSURANCE

A. Installer Qualifications: An employer of workers trained and approved by lock manufacturer.

1. Installer's responsibilities include supplying and installing door hardware and providing a qualified Architectural Hardware Consultant available during the course of the Work to consult with Contractor, Engineer, and Owner about door hardware and keying.

2. Installer shall have warehousing facilities in Project's vicinity.

3. Scheduling Responsibility: Preparation of door hardware and keying schedules.

B. Source Limitations: Obtain each type and variety of door hardware from a single manufacturer, unless otherwise indicated.

1.06 DELIVERY, STORAGE AND HANDLING

A. Inventory door hardware on receipt and provide secure lock-up for door hardware delivered to Project site.

B. Tag each item or package separately with identification related to the final door hardware sets, and include basic installation instructions, templates, and necessary fasteners with each item or package.

C. Deliver keys to manufacturer of key control system for subsequent delivery to Owner.

D. Deliver keys and permanent cores to Owner by registered mail or overnight package service.

1.07 COORDINATION

A. Templates: Distribute door hardware templates for doors, frames, and other work specified to be factory prepared for installing door hardware. Check Shop Drawings of other work to confirm that adequate provisions are made for locating and installing door hardware to comply with indicated requirements.

1.08 WARRANTY

A. Special Warranty: Manufacturer's standard form in which manufacturer agrees to repair or replace components of door hardware that fail in materials or workmanship within specified warranty period.

1. Failures include, but are not limited to, the following:
   a. Structural failures including excessive deflection, cracking, or breakage.
   b. Faulty operation of operators and door hardware.
   c. Deterioration of metals, metal finishes, and other materials beyond normal weathering and use.

2. Warranty Period: Three years, except 10 years for manual closers.

1.09 MAINTENANCE SERVICE

A. Maintenance Tools and Instructions: Furnish a complete set of specialized tools and maintenance instructions as needed for Owner's continued adjustment, maintenance, and removal and replacement of door hardware.

B. Maintenance Service: Provide six months' full maintenance by skilled employees of door hardware Installer. Include quarterly preventive maintenance, repair or replacement of worn or defective components, lubrication, cleaning, and adjusting as required for proper door hardware operation. Provide parts and supplies same as those used in the manufacture and installation of original products.

PART 2 PRODUCTS

2.01 SCHEDULED DOOR HARDWARE

A. General: Provide door hardware for each door to comply with requirements in this Section.

1. Door Hardware Sets: Provide quantity, item, size, finish or color indicated, and products equivalent in function and comparable in quality to named products and the BHMA standard referenced.

B. Designations: Requirements for design, grade, function, finish, size, and other distinctive qualities of each type of door hardware are indicated in Part 3 "Door Hardware Sets" Article. Products are identified by using door hardware designations, as follows:

1. Named Manufacturers' Products: Manufacturer and product designation are listed for each door hardware type required for the purpose of establishing minimum requirements. Manufacturers' names are abbreviated in Part 3 "Door Hardware Sets" Article.

2. References to BHMA Standards: Provide products complying with these standards and requirements for description, quality, and function.

2.02 HINGES, GENERAL

A. Quantity: Provide the following, unless otherwise indicated:

1. Two Hinges: For doors with heights up to 60 inches.

2. Three Hinges: For doors with heights 61 to 90 inches.

3. Four Hinges: For doors with heights 91 to 120 inches.

B. Template Requirements: Provide only template-produced units.

C. Hinge Weight: Provide Heavy-weight hinges.

D. Hinge Base Metal: Stainless steel, with stainless-steel pin.

E. Hinge Corners: Square.

F. Fasteners: Comply with the following:

1. Machine Screws: For metal doors and frames. Install into drilled and tapped holes.

2. Screws: Phillips flat-head; machine screws (drilled and tapped holes) for metal doors. Finish screw heads to match surface of hinges.

2.03 HINGES

A. Butts and Hinges: BHMA A156.1. Listed under Category A in BHMA's "Certified Product Directory."

B. Template Hinge Dimensions: BHMA A156.7.

1. Basis of Design: Corbin Russwin Stainless Steel with Satin finish (US32D) full mortise-type transfer hinge TA2314. Or approved equal not acceptable for this item.

2.04 LOCKS AND LATCHES, GENERAL

A. Latches and Locks for Means of Egress Doors: Comply with NFPA 101. Latches shall not require more than 15 lbf to release the latch. Locks shall not require use of a key, tool, or special knowledge for operation.

B. Lockset:

1. Mortise:
   a. Medium to light used doors - Basis of design: Corbin Russwin, ML2000 Series-Heavy. Or approved equal not acceptable for this item.
   b. Exterior doors with card reader access – Basis of design: Corbin Russwin, ML20606 NAC SEC R04 CT6 626. Or approved equal not acceptable for this item.

2. Cylindrical:
   a. Medium to light used doors - Basis of design: Corbin Russwin, CL3500 Series-Heavy. Or approved equal not acceptable for this item.
   b. Highly used doors - Basis of design: Corbin Russwin, CL3300 Series-Extra Heavy Duty. Or approved equal not acceptable for this item.

C. Electrified Lockset:

1. Mortise: High Security Monitoring - Basis of design: Corbin Russwin, ML20606 PSM NAC SEC RO4 630 CL6, Series-NAC. Or approved equal not acceptable for this item.

2. Cylindrical:
   a. Fail Secure – Basis of Design: Corbin Russwin CL33905 PZD 626 M92 SEC CL6. Or approved equal not acceptable for this item.

b. Panic Listed Secure Bolt Exit Device Corbin Russwin ED5200S P955 M95 630 CL6 M54. Or approved equal not acceptable for this item.

D. Handle and Trim:

1. Mortise:
   a. "Lustra," by Corbin Russwin; an ASSA ABLOY Group company (LSA). Or approved equal not acceptable for this item.
      1) Satin Stainless Steel US32D (BHMA 630) finish.

2. Cylindrical:
   a. "Newport," by Corbin Russwin; an ASSA ABLOY Group company (NZD). Or approved equal not acceptable for this item.
      1) Satin Chrome Plated (626) Finish.

E. Core:

1. Mortise:
   a. Complete Large Format Interchangeable Core (LFIC), 6-pin high security. Satin Chrome Plated (626) Finish.
   b. Keyed to Corbin Russwin 60-70 series restricted system with construction control key.

2. Cylindrical:
   a. Complete Large Format Interchangeable Core (LFIC), 6-pin high security. Satin Chrome Plated (626) Finish.
   b. Keyed to Corbin Russwin 60-70 series restricted system with construction control key.

2.05 EXIT DEVICES

A. Exit Devices: BHMA A156.3 Grade 1 Heavy Duty Mortise Lock Exit Device.

B. Construction:

1. Chassis shall be heavy duty cast design with one piece drawn nonferrous removable covers matching the material of the push and mounting rails.

2. Mounting rails shall be formed from a solid single piece of stainless steel, brass or bronze no less than 0.072” thick.

3. Push rails shall be constructed of 0.062” thick material in the same manner as the mounting rail. Painted or anodized aluminum shall not be considered heavy duty and are not acceptable.

4. Provide protective Lexan touchpad on the exit device push rail to prevent scratches and serve as a visible guide to the user.

5. Metal end caps shall be formed from the same base metal as the push and mounting rails.

C. Exit devices shall have a maximum of 3-inch projection from the face of the door in the non-dogged. When in the dogged position, the device shall have no more than a 2-1/8" projection from the door face.

D. The design of the exit device shall eliminate the necessity of removing the device from the door for standard maintenance or keying changes.

E. The device chassis shall be mounted and operable without the need of the rails or the chassis cover.

F. Trim shall be through-bolted.

G. Devices shall be available with matching trim for both wide and narrow stile doors, including electrified functions when required.

H. Exit device operating lever trim shall withstand 1000-inch pounds of torque without allowing access.

I. Lever trim shall be available in architectural finishes and designs to match that of the locksets specified.

2.06 DOOR BOLTS

A. Bolt Throw: Comply with testing requirements for length of bolts required for labeled fire doors, and as follows:

1. Mortise Flush Bolts: Minimum 3/4-inch throw.

B. Dustproof Strikes: BHMA A156.16, Grade 1.

C. Manual Flush Bolts: BHMA A156.16, Grade 1; designed for mortising into door edge.

1. Manufacturers: Provide products by one of the following:
   a. Hager Companies (HAG).
   b. IVES Hardware; Allegion, plc (IVS).
   c. Rockwood Manufacturing Company (RM).
   d. Or equal.

2.07 KEYING

A. Keys: Patented Corbin Russwin Master Keying System.

1. Stamping: Permanently inscribe each key with a visual key control number and include the notation "DO NOT DUPLICATE."

2. Quantity: In association with Owner requirements, determined at keying conference, provide up to the following maximum number of keys.
   a. Cylinder Change Keys: Three.
   b. Master Keys: Five.
   c. Grand Master Keys: Five.
   d. Great-Grand Master Keys: Five.

2.08 CLOSERS

A. Door Closers for Means of Egress Doors: Comply with NFPA 101. Door closers shall not require more than 30 lbf to set door in motion and not more than 15 lbf to open door to minimum required width.

B. Size of Units: Unless otherwise indicated, comply with manufacturer's written recommendations for size of door closers depending on size of door, exposure to weather, and anticipated frequency of use. Provide factory-sized closers, adjustable to meet field conditions and requirements for opening force.

C. Surface Closers: BHMA A156.4, Grade 1. Listed under Category C in BHMA's "Certified Product Directory." Provide type of arm required for closer to be located on non-public side of door, unless otherwise indicated.

1. Manufacturers: Provide products by one of the following:
   a. LCN Closers; allegion, plc (LCN).
   b. Norton Door Controls; an ASSA ABLOY Group company (NDC).
   c. SARGENT Manufacturing Company; an ASSA ABLOY Group company (SGT).
   d. Yale Commercial Locks and Hardware; an ASSA ABLOY Group company (YAL).
   e. Or equal.

2.09 PROTECTIVE TRIM UNITS

A. Size: 1-1/2 inches less than door width on push side and 1/2 inch less than door width on pull side, by height specified in door hardware sets.

B. Fasteners: Manufacturer's standard machine or self-tapping screws.

C. Metal Protective Trim Units: BHMA A156.6; beveled top and 2 sides; fabricated from the following material:

1. Material: 0.050-inch-thick stainless steel.

2. Manufacturers: Provide products by one of the following:
   a. Hager Companies (HAG).
   b. IVES Hardware; Allegion, plc (IVS).
   c. Rockwood Manufacturing Company (RM).
   d. Or equal.

2.10 STOPS AND HOLDERS

A. Stops and Bumpers: BHMA A156.16, Grade 1.

1. Provide floor stops for doors. Do not mount floor stops where they will impede traffic. Where floor or wall stops are not appropriate, provide overhead holders.

B. Manufacturers: Provide products by one of the following:

1. Hager Companies (HAG).

2. IVES Hardware; Allegion, plc (IVS).

3. Rockwood Manufacturing Company (RM).

4. Or equal.

2.11 DOOR GASKETING

A. Standard: BHMA A156.22. Listed under Category J in BHMA's "Certified Product Directory."

B. General: Provide continuous weather-strip gasketing on exterior doors. Provide noncorrosive fasteners for exterior applications and elsewhere as indicated.

1. Perimeter Gasketing: Apply to head and jamb, forming seal between door and frame.

C. Air Leakage: Not to exceed 0.50 cfm per foot of crack length for gasketing other than for smoke control, as tested according to ASTM E 283.

D. Replaceable Seal Strips: Provide only those units where resilient or flexible seal strips are easily replaceable and readily available from stocks maintained by manufacturer.

E. Gasketing Materials: ASTM D 2000 and AAMA 701/702.

F. Manufacturers: Provide products by one of the following:

1. Hager Companies (HAG).

2. National Guard Products (NGP).

3. Pemko Manufacturing Co. (PEM).

4. Zero International (ZRO).

5. Or equal.

2.12 THRESHOLDS

A. Standard: BHMA A156.21. Listed under Category J in BHMA's "Certified Product Directory."

B. Thresholds for Means of Egress Doors: Comply with NFPA 101. Maximum 1/2 inch high.

C. Manufacturers: Provide products by one of the following:

1. Hager Companies (HAG).

2. National Guard Products (NGP).

3. Pemko Manufacturing Co. (PEM).

4. Or equal.

2.13 MISCELLANEOUS DOOR HARDWARE

A. Auxiliary Hardware: BHMA A156.16, Grade 1.

1. Manufacturers: Provide products by one of the following:
   a. Hager Companies (HAG).
   b. Rockwood Manufacturing Company (RM).
   c. Stanley Commercial Hardware; Div. of The Stanley Works (STH).
   d. Or equal.

2.14 FABRICATION

A. Manufacturer's Nameplate: Do not provide products that have manufacturer's name or trade name displayed in a visible location except in conjunction with required fire-rated labels and as otherwise approved by Engineer.

   1. Manufacturer's identification is permitted on rim of lock cylinders only.

B. Base Metals: Produce door hardware units of base metal, fabricated by forming method indicated, using manufacturer's standard metal alloy, composition, temper, and hardness. Furnish metals of a quality equal to or greater than that of specified door hardware units and BHMA A156.18. Do not furnish manufacturer's standard materials or forming methods if different from specified standard.

C. Fasteners: Provide door hardware manufactured to comply with published templates generally prepared for machine, wood, and sheet metal screws. Provide screws according to commercially recognized industry standards for application intended, except aluminum fasteners are not permitted. Provide Phillips flat-head screws with finished heads to match surface of door hardware, unless otherwise indicated.

   1. Concealed Fasteners: For door hardware units that are exposed when door is closed, except for units already specified with concealed fasteners. Do not use through bolts for installation where bolt head or nut on opposite face is exposed unless it is the only means of securely attaching the door hardware. Where through bolts are used on hollow door and frame construction, provide sleeves for each through bolt.

   2. Spacers or Sex Bolts: For through bolting of hollow-metal doors.

2.15 FINISHES

A. Standard: BHMA A156.18, as indicated in door hardware sets.

B. Protect mechanical finishes on exposed surfaces from damage by applying a strippable, temporary protective covering before shipping.

C. Appearance of Finished Work: Variations in appearance of abutting or adjacent pieces are acceptable if they are within one-half of the range of approved Samples. Noticeable variations in the same piece are not acceptable. Variations in appearance of other components are acceptable if they are within the range of approved Samples and are assembled or installed to minimize contrast.

PART 3 EXECUTION

3.01 EXAMINATION

A. Examine doors and frames, with Installer present, for compliance with requirements for installation tolerances, labeled fire door assembly construction, wall and floor construction, and other conditions affecting performance.

B. Examine roughing-in for electrical power systems to verify actual locations of wiring connections before electrified door hardware installation.

C. Proceed with installation only after unsatisfactory conditions have been corrected.

3.02 PREPARATION

A. Steel Doors and Frames: Comply with DHI A115 Series.

1. Surface-Applied Door Hardware: Drill and tap doors and frames according to ANSI A250.6.

3.03 INSTALLATION

A. Mounting Heights: Mount door hardware units at heights indicated as follows unless otherwise indicated or required to comply with governing regulations.

1. Custom Steel Doors and Frames: DHI's "Recommended Locations for Builders' Hardware for Custom Steel Doors and Frames."

B. Install each door hardware item to comply with manufacturer's written instructions. Where cutting and fitting are required to install door hardware onto or into surfaces that are later to be painted or finished in another way, coordinate removal, storage, and reinstallation of surface protective trim units with finishing work specified in Division 9 Sections. Do not install surface-mounted items until finishes have been completed on substrates involved.

1. Set units level, plumb, and true to line and location. Adjust and reinforce attachment substrates as necessary for proper installation and operation.

2. Drill and countersink units that are not factory prepared for anchorage fasteners. Space fasteners and anchors according to industry standards.

3.04 FIELD QUALITY CONTROL

A. Independent Architectural Hardware Consultant: Owner will engage a qualified independent Architectural Hardware Consultant to perform inspections and to prepare inspection reports.

1. Independent Architectural Hardware Consultant will inspect door hardware and state in each report whether installed work complies with or deviates from requirements, including whether door hardware is properly installed and adjusted.

3.05 ADJUSTING

A. Initial Adjustment: Adjust and check each operating item of door hardware and each door to ensure proper operation or function of every unit. Replace units that cannot be adjusted to operate as intended. Adjust door control devices to compensate for final operation of heating and ventilating equipment and to comply with referenced accessibility requirements.

1. Door Closers: Unless otherwise required by authorities having jurisdiction, adjust sweep period so that, from an open position of 70 degrees, the door will take at least 3 seconds to move to a point 3 inches from the latch, measured to the leading edge of the door.

B. Occupancy Adjustment: Approximately six months after date of Substantial Completion, Installer's Architectural Hardware Consultant shall examine and readjust, including adjusting operating forces, each item of door hardware as necessary to ensure function of doors, door hardware, and electrified door hardware.

3.06 CLEANING AND PROTECTION

A. Clean adjacent surfaces soiled by door hardware installation.

B. Clean operating items as necessary to restore proper function and finish.

C. Provide final protection and maintain conditions that ensure that door hardware is without damage or deterioration at time of Substantial Completion.

3.07 DEMONSTRATION

A. Engage a factory-authorized service representative to train Owner's maintenance personnel to adjust, operate, and maintain door hardware and door hardware finishes.

3.08 DOOR HARDWARE SETS

A. Hardware Sets

1. HW 1 (Pair of Exterior Doors)
   1) Hinges Hager BB1199, 4-1/2 x 4-1/2
   2) Closer Sargent 281 Series with heavy duty arm
   3) Electrified Mortise Lockset – Corbin Russwin ML20606
   4) Exit Device – Corbin Russwin ED5808 Series (US32D)
   5) Flush Bolts (inactive leaf)
   6) Overhead Stop and Holder Rixson 1ADJ-026
   7) Kick Plate Rockwood K1050, stainless, 8” high 4BE
   8) Threhold Pemko 2005AT
   9) Door Bottom Pemko 324CN
   10) Gasketing Pemko 290 AV (coordinate head w/ closer)
   11) Stop – Floor

2. HW 2 (Exterior Door)
   1) Hinges Hager BB1199, 4-1/2 x 4-1/2
   2) Closer Sargent 281 Series with heavy duty arm
   3) Electrified Mortise Lockset – Corbin Russwin ML20606

4) Exit Device – Corbin Russwin ED5808 Series (US32D)
5) Overhead Stop and Holder Rixson 1ADJ-026
6) Kick Plate Rockwood K1050, stainless, 8” high 4BE
7) Threhold Pemko 2005AT
8) Door Bottom Pemko 324CN
9) Gasketing Pemko 290 AV (coordinate head w/ closer)
10) Stop – Floor

END OF SECTION

THIS PAGE INTENTIONALLY LEFT BLANK

© 2019 CDM Smith
All Rights Reserved

SECTION 09901
SURFACE PREPARATION AND SHOP PRIME PAINTING

PART 1 GENERAL

1.01 SCOPE OF WORK

A. Furnish all labor, materials, equipment and incidentals required for the surface preparation and application of shop primers on ferrous metals, excluding stainless steels, as specified herein.

1.02 RELATED WORK

A. Finish painting is included in Section 09902.

1.03 SUBMITTALS

A. Submit, in accordance with Section 01300, shop drawings, manufacturer's specifications and data on the proposed primers and detailed surface preparation, application procedures and dry mil thicknesses.

B. Submit representative physical samples of the proposed primers, if required by the Engineer.

1.04 REFERENCE STANDARDS

A. The Society for Protective Coatings (SSPC)

1. SSPC-SP 6/NACE No. 3 - Joint Surface Preparation Standard SSPC-SP 6/NACE No. 3: Commercial Blast Cleaning

2. SSPC-SP 10/NACE No. 2 - Joint Surface Preparation Standard SSPC-SP 10/NACE No. 2: Near-White Blast Cleaning.

B. Where reference is made to one of the above standards, the revision in effect at the time of bid opening shall apply.

PART 2 PRODUCTS

2.01 MATERIALS

A. Submerged Surfaces - Shop primer for ferrous metals which will be in contact with water being treated, either submerged or which are subject to splash action or which are specified to be considered submerged service shall be shop primed with the following:

1. Shop Prime Coat: (Zinc Micaceous Iron Oxide Polyurethane Aromatic Shop Primer)
   a. TNEMEC: Series 1 Omnithane
   b. Carboline: Carboguard 561
   c. Sherwin-Williams Company (The): Corothane I Zinc Primer 1K Mio-Zinc.
   d. PPG PMC Durathane MCZ 97-679 Series or PPG PMC Amerlock 400.
   e. Or equal.

B. Non-Submerged Surfaces: Shop primer for ferrous metals which will not be in contact with water being treated, not submerged and not subject to splash action shall be shop primed with the following:

1. Shop Prime Coat: (Zinc Micaceous Iron Oxide Polyurethane Aromatic Shop Primer)
   a. TNEMEC: Series 1 Omnithane
   b. Carboline: Carboguard 561
   c. Sherwin-Williams Company (The): Corothane I Zinc Primer 1K Mio-Zinc.
   d. PPG PMC Durathane MCZ 97-679 Series or PPG PMC Amercoat 68HS
   e. Or equal.

C. Non-Primed Surfaces - Gears, bearings surfaces and other similar surfaces obviously not to be painted shall be given a heavy shop coat of grease or other suitable rust-resistant coating. This coating shall be maintained as necessary to prevent corrosion during all periods of storage and erection and shall be satisfactory to the Engineer up to the time of the final acceptance test.

D. Compatibility of Coating Systems - Shop priming shall be done with primers that are guaranteed by the manufacturer to be compatible with their corresponding primers and finish coats specified in Section 09902 for use in the field and which are recommended for use together.

PART 3 EXECUTION

3.01 APPLICATION

A. Surface Preparation and Priming

1. Non-submerged components scheduled for priming, as defined above, shall be blast cleaned in accordance with SSPC-SP 6/NACE No. 3, immediately prior to priming. Submerged components scheduled for priming, as defined above, shall be blast cleaned in accordance with SSPC-SP 10/NACE No. 2, immediately prior to priming. Consult manufacturer regarding required surface profiles.

2. Surfaces shall be dry and free of dust, oil, grease and other foreign material before priming.

3. Shop prime in accordance with approved manufacturer's recommendations.

B. Non-Primed Surfaces

1. Apply approved coating per manufacturer's recommendations.

3.02 FABRICATED ITEMS

A. All items to be shop primed shall be blast cleaned as specified for applicable service prior to priming. If, in the opinion of the Engineer, any prime coating that has been improperly applied or if material contrary to this Section has been used, that coating shall be removed by abrasive blasting to white metal and reprimed in accordance with this Section.

B. All shop prime coats shall be of the correct materials and applied in accordance with this Section. Remove any prime coats not in accordance with this Section by blast cleaning and apply the specified prime coat at no additional cost to the Owner.

C. Shop primed surfaces shall be cleaned thoroughly and damaged or bare spots prepared as approved and retouched with the specified primer before the application of successive paint coats in the field.

D. Shop finish coats, if proposed and allowed, shall be equal in appearance and protection quality to a field applied finish coat. If, in the opinion of the Engineer, a shop finish coat system does not give the appearance and protection quality of other work of similar nature, prepare the surfaces and apply the coat or coats of paint as directed by the Engineer to accomplish the desired appearance and protection quality. Submit to the Engineer substantial evidence that the standard finish is compatible with the specified finish coat.

E. Properly protect the shop prime and finish coats against damage from weather or any other cause.

F. Wherever fabricated equipment is required to be blast cleaned, protect all motors, drives, bearings, gears, etc., from the entry of grit. Equipment found to contain grit shall be promptly and thoroughly cleaned.

END OF SECTION

© 2019 CDM Smith
All Rights Reserved

THIS PAGE INTENTIONALLY LEFT BLANK

© 2019 CDM Smith
All Rights Reserved

SECTION 09902
PAINTING

PART 1 GENERAL

1.01 SCOPE OF WORK

A. Furnish all labor, materials, equipment and incidentals required and install all painting complete as shown on the Drawings and as specified herein.

B. It is the intent of this Section to paint all exposed structural and miscellaneous steel; chemical tanks and systems; mechanical and electrical equipment; sluice gates, operators and posts; conveying systems, pipe, fittings and valves; electrical conduit and appurtenances; exposed interior ducts; all as specified in the attached painting schedules and all other work obviously required to be painted unless otherwise specified. Minor items not mentioned in the schedule of work shall be included in the work of this Section where they come within the general intent of this Section as stated herein.

C. Aluminized steel, above roof level, for stacks - Paint with silicone aluminum as specified. Other aluminum-paint only where noted (as is specified). Paint items so noted in Paragraph 1.01B and in accordance with the Painting Schedule. Provide vinyl film letters and numbers for markings as specified. Items noted in other Specification Sections as having factory finish and other factory finished items are obviously not field painted. The Contractor is responsible for having damaged factory finish painted items repaired or, if so ordered, for replacing items. The various Sections are responsible, as stated in each, for preparation and field touch-up of abrasions, welds and damaged primed areas of primed or galvanized components after erection.

D. The following items will not be painted:

1. Concrete except where specified above and scheduled to be painted and seamless flooring.

2. Finish hardware.

3. Non-ferrous metals and stainless steel, unless specifically noted otherwise.

4. Factory pre-finished architectural components.

5. Packing glands and other adjustable parts and name plates of mechanical equipment.

6. Parts of buildings not exposed to sight, unless specifically noted otherwise.

7. Maintenance equipment

8. Plumbing fixtures.

9. Mechanical, HVAC, Plumbing and Electrical equipment which has been finished painted in the factory as specified in Divisions 11, 13 and 15.

1.02 RELATED WORK

A. Valve identification is included in Divisions 15.

B. Shop priming and surface preparation of equipment and piping (except copper piping) are specified in Section 09901 and included in the respective Section with the item to be primed.

C. Shop priming of metal substrates with primers is included in Division 5.

1.03 SUBMITTALS

A. Submit the following in accordance with Section 01300.

B. Product Data: For each type of product indicated.

C. Samples: Submit the following for each type of coating system and in each color and gloss of finish coat indicated.

1. Color cards for initial color selections.

2. Three sets of 8-in by 8-in samples, on 1/4-in hardboard, of all colors required for all types of paint. Resubmit until approved.

D. Product List: For each product indicated. Cross-reference products to coating system and locations of application areas. Use same designations indicated on Drawings and in schedules.

1.04 REFERENCE STANDARDS

A. Steel Structures Painting Council (SSPC)

1. SSPC SP-1 - Surface Preparation Specification No. 1 Solvent Cleaning.

2. SSPC SP-2 - Surface Preparation Specification No. 2 Hand Tool Cleaning.

B. Where reference is made to one of the above standards, the revision in effect at the time of bid opening shall apply.

1.05 DELIVERY, STORAGE, AND HANDLING

A. Store materials not in use in tightly covered containers in well-ventilated areas with ambient temperatures continuously maintained at not less than 45 deg F.

1. Maintain containers in clean condition, free of foreign materials and residue.

2. Remove rags and waste from storage areas daily.

1.06 PROJECT CONDITIONS

A. Apply coatings only when temperature of surfaces to be coated and surrounding air temperatures are between 50 and 95 deg F.

B. Do not apply coatings in snow, rain, fog, or mist; when relative humidity exceeds 85 percent; at temperatures less than 5 deg F above the dew point; or to damp or wet surfaces.

1.07 EXTRA MATERIALS

A. Furnish extra materials described below that are from same production run (batch mix) as materials applied and that are packaged for storage and identified with labels describing contents.

1. Quantity: Furnish an additional 5 percent, but not less than 1 gal. of each material and color applied.

PART 2 PRODUCTS

2.01 MANUFACTURERS

A. Manufacturers: Provide products by one of the following:

1. Tnemec, Inc.(TN);

2. The Sherwin Williams Company (SW)

3. PPG Architectural Finishes, Inc. (PPG)

2.02 MATERIALS

A. Material Compatibility:

1. Provide materials for use within each coating system that are compatible with one another and substrates indicated, under conditions of service and application as demonstrated by manufacturer, based on testing and field experience.

2. Provide products of same manufacturer for each coat in a coating system.

B. All painting materials shall be delivered to the work site in unbroken packages, bearing the manufacturer's brand and name. They shall be used without adulteration and mixed, thinned and applied in strict accordance with manufacturer's directions for the applicable materials and surface and with the Engineer's approval before using.

C. Shop priming shall be done with primers that are guaranteed by the manufacturer to be compatible with the finish paints to be used. Refer to Section 09901 for special primers.

D. Work areas will be designated by the Engineer for storage and mixing of all painting materials. Materials shall be in full compliance with the requirements of pertinent codes and fire regulations. Proper containers outside of the buildings shall be provided and used for painting wastes and no plumbing fixture shall be used for this purpose.

E. Colors: As selected by JEA from manufacturer's full range in accordance with JEA Standard Section 447.

2.03 COLOR CODING FOR PIPES AND EQUIPMENT

A. The color code establishes, defines and assigns a definite color for each process system. All elements which are an integral part of the system, that is originating from the equipment and/or supplying the equipment, shall be painted between and up to but not including the fixed flanges

nor the flexible conduit connections on the equipment. Valves and fittings shall be painted in the color of the main body of the pipe.

B. All pipes, valves, and equipment shall be painted with final coat color selected by the Owner and shall be treated as an integral part of the Contract.

C. All hanger saddles and pipe support floor stands shall be painted the same color and with the same paint as the pipe it supports. Hanger rods and hanger rod connections to building structure shall be painted to match the color of the wall or ceiling to which it is attached.

2.04 LETTERING OF TITLES

A. The name of the materials in each pipeline and alongside this an arrow indicating the direction of flow of fluids, shall be indicated on each pipe system. Titles shall not be located more than 26 linear feet apart and shall also appear directly adjacent to each side of any wall the pipeline breaches, adjacent to each side of the valve regulator, flowcheck, strainer cleanout and all pieces of equipment.

B. Titles shall identify the contents by complete name at least once in each space through which it passes and thereafter by generally recognized abbreviations, letters or numerals as approved. Identification title locations shall be determined by the Engineer but in general they shall be placed where the view is unobstructed and on the two lower quarters of pipe or covering where they are overhead. Title should be clearly visible from operating positions especially those adjacent to control valves.

C. Numbers and letters shall be die-cut from 3.5 mil vinyl film and prespaced on carrier tape. Adhesive and finish surface shall be protected with one piece removable liners. Color shall be white or black as approved depending on substrate color.

D. Letter size shall be as indicated in the following table:

OUTSIDE DIAMETER OF PIPE OR COVERING	SIZE OF LEGEND LETTERS
3/4-in to 1-1/4-in	1/2-in
1-1/2-in to 2-in	3/4-in
2-1/2-in to 6-in	1-1/2-in
8-in to 10-in	2-1/2-in
Over 10-in	3-in

E. The system for preparation and application of letters shall be Type B a.s.i/2 by ASI Sign Systems; Architectural Graphics Inc. or equal. Letter type shall be Optima Bold, upper case. Grid 2 spacing shall be employed. Arrow shall match as approved, letter type and size. The instructions of the manufacturer shall be followed in respect to storage, surface preparation and applications of letters.

2.05 TITLES FOR EQUIPMENT

A. Titles shall be provided in vinyl film as specified above on all equipment using 1-in high Optima Bold upper case, Grid 2 spacing, white or black in color as approved depending on substrate. Use titles shown on mechanical drawings for bidding purposes. Titles shall be

mounted at eye level on machines where possible or at the upper most broad vertical surface of low equipment. Where more than one piece of the equipment item to be titled exists, the items shall be numbered consecutively as indicated on the mechanical drawings or as directed by the Engineer; for example, Pump No. 1, Pump No. 2, etc. Titles shall be composed in more than one line if required and justified on the left hand side as approved.

2.06 TESTING EQUIPMENT

A. Furnish to the Engineer for use on the Project for paint inspection, wet and dry film thickness gauges and all other equipment required by the Engineer for inspection.

PART 3 EXECUTION

3.01 EXAMINATION

A. Examine substrates and conditions, with Applicator present, for compliance with requirements for maximum moisture content and other conditions affecting performance of work.

1. Maximum Moisture Content of Substrates: When measured with an electronic moisture meter as follows:
   a. Concrete: 12 percent.
   b. Wood: 15 percent.
   c. Gypsum Board: 12 percent.

2. Verify compatibility with and suitability of substrates, including compatibility with existing finishes or primers.

3. Begin coating application only after unsatisfactory conditions have been corrected and surfaces are dry.

4. Coating application indicates acceptance of surfaces and conditions.

3.02 PREPARATION

A. All surfaces to be painted shall be prepared as specified herein and shall be dry and clean before painting. Special care shall be given to thoroughly clean interior concrete to receive polyamide cured epoxy paint of all marks before application of finish.

B. All metal welds, blisters, etc, shall be ground and sanded smooth. All pits and dents shall be filled and all imperfections shall be corrected so as to provide a smooth surface for painting. All rust, loose scale, oil, tar and asphalt bearing coatings, grease and dirt shall be removed by use of approved solvents, wire brushing, grinding or sanding.

C. Concrete surfaces shall have been finished as specified in Section 03350. Report unsatisfactory surfaces to the Engineer. Concrete shall be left for one-month minimum before painting and shall be free of dust, oil, curing compounds and other foreign matter.

D. All PVC pipe and other plastic matrix surfaces to be painted shall be sanded to an approved profile and cleaned of residue before painting.

E. All PVC pipe and other plastic matrix surfaces to be painted shall be lightly sanded and cleaned of residue before painting.

F. Galvanized, aluminum, and copper surfaces shall have all oxidation and foreign material removed before painting by SSPC SP-1, using an approved V.O.C. compliant method. Galvanized and, when ordered, the other metal surfaces specified above shall be hand tool cleaned to SSPC SP-2 standards to provide a uniform 1 mil surface profile.

G. Existing Surfaces to be Repainted

1. Existing masonry, steel and other previously field painted surfaces so noted or as provided in Paragraph 1.01B shall be repainted.

2. Preparation shall be in general as specified above for new surfaces except that all loose paint shall be removed and all edges of existing paint shall be feathered to ensure a smooth surface.

3. Paint removal, capture of its residue, and its disposal shall be handled in accordance with all laws and regulations concerning disposal of hazardous materials.

4. Primer (spot) and paint used for a particular surface shall, in general, be as scheduled for that type of new surface. Provide a CDM approved organic zinc-rich (min. 83% zinc in dried film) primer as specified. Confirm with the paint manufacturer that the paint proposed for a particular repaint condition will be compatible with the existing painted surface. Perform adhesion and compatibility tests on existing substrates as ordered and required. Repainted areas shall be covered by the same guaranty specified for remainder of Project.

3.03 WORKMANSHIP

A. General

1. At the request of the Engineer, sample areas of the finished work prepared in strict accordance with this Section shall be furnished and all painting shall be equal in quality to the approved sample areas. Finished areas shall be adequate for the purpose of determining the quality of workmanship. Experimentation with factory or paint manufacturer's warehouse mixed colors shall be furnished to the satisfaction of the Engineer where standard chart colors are not satisfactory.

2. Protection of furniture and other movable objects, equipment, fittings and accessories shall be provided throughout the painting operation. Canopies of lighting fixtures shall be loosened and removed from contact with surface, covered and protected and reset upon completion. Remove all electric plates, surface hardware, etc, before painting, protect and replace when completed. Mask all machinery name plates and all machined parts not receiving a paint finish. Dripped or spattered paint shall be promptly removed. Lay drop cloths in all areas where painting is being done to adequately protect flooring and other work from all damage during the operation and until the finished job is accepted.

3. On metal surfaces apply each coat of paint at the rate specified by the manufacturer to achieve the minimum dry mil thickness required. If material has thickened or must be diluted for application by spray gun, the coating shall be built up to the same film thickness achieved with undiluted material. One gallon of paint as originally furnished by the

manufacturer shall not cover a greater area when applied by spray gun than when applied unthinned by brush. Deficiencies in film thickness shall be corrected by the application of an additional coat(s). On masonry, application rates will vary according to surface texture; however, in no case shall the manufacturer's stated coverage rate be exceeded. On porous surfaces, it shall be the painter's responsibility to achieve a protective and decorative finish either by decreasing the coverage rate or by applying additional coats of paint.

B. Field Priming

1. Steel members, metal castings, mechanical and electrical equipment and other metals which are shop primed before delivery at the site will not require a prime coat on the job. All piping and other bare metals to be painted shall receive one coat of primer before exposure to the weather, and this prime coat shall be the first coat as specified in the painting schedule. Surface preparation of bare metal shall be the responsibility of the Contractor.

2. Equipment which is specified to receive a baked-on enamel finish or other factory finish shall not be field painted unless the finish has been damaged in transit or during installation. Surfaces that have been shop painted and have been damaged, or where the shop coat or coats of paint have deteriorated, shall be properly cleaned and retouched before any successive painting is done on them in the field. All such field painting shall match as nearly as possible the original finish. Preparation and painting shall be provided by the Contractor.

3. Equipment shipped with a protective shop painting coat or coats shall be touched up to the satisfaction of the Engineer with primers as recommended by the manufacturer of the finish paint. Preparation and painting shall be provided by the Contractor.

C. Field Painting

1. All painting at the site shall be under the strict inspection of the Engineer. Only skilled painters and, where dictated by special conditions or systems and so ordered, specialist painters shall be used on the work.

2. All paint shall be at room temperature before applying, and no painting shall be done when the temperature is below 60 degrees F, in dust-laden air, when rain or snow is falling, or until all traces of moisture have completely disappeared from the surface to be painted.

3. Successive coats of paint shall be different shades (from paint manufacturer's stock or shop mixed paint) of the required colors so as to make each coat easily distinguishable from each other with the final undercoat the approximate shade of the finished coat to ensure no show-through as approved.

4. Finish surfaces shall not show brush marks or other irregularities. Undercoats shall be thoroughly and uniformly sanded with the type paper appropriate for the undercoats to remove defects and provide a smooth even surface. Top and bottom edges of doors shall be painted.

5. Painting shall be continuous and shall be accomplished in an orderly manner so as to facilitate inspection. Materials subject to weather shall be primed coated as quickly as

possible. Surfaces of exposed members that will be inaccessible after erection shall be cleaned and painted before erection.

6. All painting shall be performed by approved methods with number of coats modified as required to obtain the total dry film thickness specified. Spray painting shall be performed specifically by methods submitted and as approved by the Engineer.

7. All surfaces to be painted as well as the atmosphere in which painting is to be done shall be kept warm and dry by heating and ventilation, if necessary, until each coat of paint has hardened. Any defective paint shall be scraped off and repainted in accordance with the Engineer's directions.

8. Before final acceptance of the work, all damaged surfaces of paint shall be cleaned and repainted as directed by the Engineer.

9. Only the aluminum work noted on the Drawings or in the Painting Schedule shall be field painted.

3.04 FIELD QUALITY CONTROL

A. Owner reserves the right to invoke the following procedure at any time and as often as Owner deems necessary during the period when coatings are being applied:

1. Owner will engage the services of a qualified testing agency to sample coating material being used. Samples of material delivered to Project site will be taken, identified, sealed, and certified in presence of Contractor.

2. Testing agency will perform tests for compliance with specified requirements.

3. Owner may direct Contractor to stop applying coatings if test results show materials being used do not comply with specified requirements. Contractor shall remove noncomplying coating materials from Project site, pay for testing, and recoat surfaces coated with rejected materials. Contractor will be required to remove rejected materials from previously coated surfaces if, on recoating with complying materials, the two coatings are incompatible.

3.05 CLEANING AND PROTECTION

A. At end of each workday, remove rubbish, empty cans, rags, and other discarded materials from Project site.

B. After completing coating application, clean spattered surfaces. Remove spattered coatings by washing, scraping, or other methods. Do not scratch or damage adjacent finished surfaces.

C. Protect work of other trades against damage from coating operation. Correct damage by cleaning, repairing, replacing, and recoating, as approved by Engineer, and leave in an undamaged condition.

D. At completion of construction activities of other trades, touch up and restore damaged or defaced coated surfaces.

3.06 PAINTING SCHEDULE

A. All colors will be selected by the Owner.

B. The following types of paints by PPG Protective & Marine Coatings, (PPG PMC); Tnemec Co. (TN) and The Sherwin Williams Company (SW) have been used as a basis for the paint schedule:

1. Epoxy:
   a. TN: Hi-build Epoxoline II (Series N69)
   b. SW: Macropoxy 646
   c. PPG PMC: Pitt-Guard 97-145 Series Epoxy Mastic

2. Waterborne Cementitious Acrylic:
   a. TN: Envirofil (No. 130-6602 off-white color) -.
   b. SW: Cement-Plex 875
   c. PPG: Cementitious Waterproofing Block Filler 95-217 Series

3. High-Build Acrylic Polyurethane Enamel:
   a. TN: Endura-Shield III - semi-gloss (Series V73)
   b. SW: Acrolon 218 HS
   c. PPG: Pitthane HB Semigloss Urethane 95-8800 Series

4. High Heat Silicone Aluminum (to 600 degrees F)
   a. TN: Silicone Aluminum (No. 39-661)
   b. SW: Kem Hi-Temp No.850
   c. PPG: Speedhide 6-220 Series Silicone Aluminum Coating

5. Tie Coat, Low VOC, Epoxy:
   a. TN: FC Typoxy (Series V27)
   b. SW: Macropoxy HS
   c. PPG: Pitt-Guard Epoxy Mastic 95-245 Series

6. Acrylic Latex Emulsion, Eggshell Finish:
   a. TN: Tneme-Cryl (Series 6)
   b. SW: DTM Primer Finish
   c. PPG: Pitt-tech Plus 90-1110 Series Satin DTM Acrylic

7. Vinyl Acrylic Surface Sealer:
   a. TN: PVA Sealer (No. 51-792)
   b. SW: Prep-Rite 200 Primer
   c. PPG: Speedhide 6-2 Vinyl Acrylic Drywall Primer

C. The following surfaces shall have the types of paint scheduled below applied at the dry film thickness (DFT) in mils per coat noted:

1. Exterior non- submerged ferrous metals (except first coat-hollow metal-pressed metal work).
   a. First Coat: On properly prepared unprimed metal or for touch-up
      1) TN: No. N69 (white in color) (3.0-4.0 DFT)
      2) SW: Macropoxy 646 (5.0–10.0 DFT)
      3) PPG: Pitt-Guard 97-145 Series Epoxy Mastic
   b. Second Coat:
      1) TN: Series N69 (4.0 DFT)
      2) SW: Acrolon 218 HS (3.0-6.0 DFT)
      3) PPG: Pitt-Guard 97-145 Series Epoxy Mastic

c. Third Coat:
   1) TN: Series V73 (3.0 DFT)
   2) SW: Acrolon 218 HS (3.0-6.0 DFT)
   3) PPG: Pitthane HB Semigloss Urethane 95-8800 Series

2. Interior non-submerged concrete scheduled for painting.
   a. First and Second Coats:
      1) TN: Series N69 (4.0-5.0 DFT)
      2) SW: Macropoxy 646 (5.0-10.0 DFT)
      3) PPG: Pitt-Guard 97-145 Series Epoxy Mastic

3. Interior non-submerged ferrous metals (except first coat of previously painted metal work), on properly prepared unprimed metal or for touch-up.
   a. First Coat:
      1) TN: No. N69 (white in color) (3.0-4.0 DFT)
      2) SW: Macropoxy 646 (5.0-10.0 DFT)
      3) PPG: Pitt-Guard 97-145 Series Epoxy Mastic
   b. Second and Third Coats:
      1) TN: Series N69 (3.0-4.0 DFT)
      2) SW: Macropoxy 646 (5.0-10.0 DFT)
      3) PPG: Pitt-Guard 97-145 Series Epoxy Mastic

4. Plastic piping and, where scheduled to be painted, plastic components
   a. First and Second Coats:
      1) TN: Series N69 (3.0 DFT)
      2) SW: Macropoxy 646 (5.0-10.0 DFT)
      3) PPG: Pitt-Guard 97-145 Series Epoxy Mastic

5. Pipe insulation: (Plastic or metal sheathed insulation-paint as scheduled for appropriate substrate)
   a. First Coat:
      1) TN: No. 51-792 (Vinyl-Acrylic Sealer - 1.0 DFT)
      2) SW: Prep-Rite 200 (1.1 DFT), Macropoxy 646 (5.0-10.0 DFT)
      3) PPG: Speedhide 6-2 Vinyl Acrylic Drywall Primer
   b. Second and Third Coats:
      1) TN: Series N69 (3.0 DFT)
      2) SW: Prep-Rite 200 (1.1 DFT), Macropoxy 646 (5.0-10.0 DFT)
      3) PPG: Pitt-Guard 97-145 Series Epoxy Mastic

6. Aluminum designated to be painted. (Mechanically abrade surfaces to a uniform profile of 1 to 2 mils and clean completely.)
   a. First and Second Coats: (Interior)
      1) TN: Series N69 (3.0 DFT)
      2) SW: Macropoxy 646 (5.0-10.0 DFT)
      3) PPG: Pitt-Guard 97-145 Series Epoxy Mastic
   b. First Coat: (Exterior)
      1) TN: Series N69 (4.0 DFT), 1 coat Series V73 (3.0 DFT)
      2) SW: Macropoxy 646 (5.0-10.0 DFT), Acrolon 218 HS (3.0-6.0 DFT)
      3) PPG: Pitt-Guard 97-145 Series Epoxy Mastic

7. Hot ferrous metal surfaces

a. First and Second Coats:
   1) TN: Series 39-661 (1.5 DFT)
   2) SW: Kem Hi-Temp 850 (Primer 1.1 DFT / Topcoat 1.0-1.2 DFT)
   3) PPG: Speedhide 6-220 Series Silicone Aluminum Coating

8. Previously painted metal surfaces - First coat on substrates prepared as approved and replacing first coat of above-specified systems. Complete painting with remainder of specified system for each type of substrate.
   a. First Coat:
      1) TN: FC Typoxy Series V27 (5 DFT)
      2) SW: Macropoxy HS (3.0-6.0 DFT)
      3) PPG: Pitt-Guard 97-145 Series Epoxy Mastic

9. Exterior galvanized steel surfaces. (Mechanically abrade surfaces to a uniform profile of 1 to 2 mils and clean completely.)
   a. First Coat:
      1) TN: Series V27 (3.0 to 4.0 DFT)
      2) SW: Macropoxy 646 (5.0-10.0 DFT)
      3) PPG: Pitt-Guard Epoxy Mastic 95-245 Series
   b. Second Coat:
      1) TN: Series V73 (2.5 to 3.5 DFT)
      2) SW: Acrolon 218 HS (3.0-6.0 DFT)
      3) PPG: Pitthane HB Semigloss Urethane 95-8800 Series

END OF SECTION

THIS PAGE INTENTIONALLY LEFT BLANK

© 2019 CDM Smith
All Rights Reserved

SECTION 10400
SIGNAGE

PART 1 GENERAL

1.01 SCOPE OF WORK

A. Furnish all labor, materials, equipment and incidentals required and install signage as specified and scheduled herein.

B. The types to be furnished are as follows:

1. Room identification signs.

2. Restrictive signs.

1.02 RELATED WORK

A. Piping and equipment identification is specified in Section 09902.

1.03 SUBMITTALS

A. Submit, in accordance with Section 01300, shop drawings showing details of construction and erection. Submittals shall include the following:

1. Manufacturer's complete color range and type styles.

2. Sign layout with shop drawings as follows:
   a. Scale layout of all site signs.
   b. Full size layout of typical Room Identification and Restrictive signs.

3. Submit two each of the following samples. Samples shall be resubmitted as required until approved.
   a. A 12-in minimum square sample of each proposed plastic restrictive sign and proposed framing and mounting device.
   b. A 6-in minimum square sample of proposed aluminum plaque for Room Identification cut into letters in the colors proposed for the required color scheme.

4. Cleaning and maintenance instructions for all signage components.

PART 2 PRODUCTS

2.01 MATERIALS

A. Aluminum Sheet and Plate: ASTM B 209, alloy and temper recommended by aluminum producer and finisher for type of use and finish indicated, and with at least the strength and durability properties of Alloy 5005-H32.

B. Acrylic Sheet: ASTM D 4802, Category A-1 (cell-cast sheet), Type UVA (UV absorbing).

2.02 ROOM IDENTIFICATION SIGNS

A. Manufacturers: Provide products by one of the following:

1. ASI-Modulex, Inc.

2. Seton Identification Products.

3. Signature Signs, Incorporated.

4. Or equal.

B. Exterior Panel Signs: Provide smooth sign panel surfaces constructed to remain flat under installed conditions within a tolerance of plus or minus 1/16 inch measured diagonally from corner to corner, complying with the following requirements:

1. Aluminum Sheet: 0.080 inch thick.

2. Edge Condition: Square Cut

3. Corner Condition: Square.

4. Mounting: Framed.
   a. Wall mounted with concealed anchors.
   b. Manufacturer's standard anchors for substrates encountered.

5. Color: As selected by Engineer from manufacturer's full range.

C. Brackets: Fabricate brackets and fittings for bracket-mounted signs from extruded aluminum to suit panel sign construction and mounting conditions indicated. Factory paint brackets in color matching background color of panel sign.

2.03 RESTRICTIVE SIGNS

A. 60 mil, polished vinyl, overcoated with Tedlar sheet with four mounting holes and rounded corners for other locations.

B. Print (permanent type as approved) all with required graphics and letters. Print under overcoat where such occurs.

C. Provide stainless steel fasteners and plastic drill-in anchors as required or stainless steel wire for fastening where each is ordered.

D. Signs shall be by Seton Name Plate Corp. or equal.

2.04 ACCESSORIES

A. Anchors and Inserts: Provide nonferrous-metal or hot-dip galvanized anchors and inserts for exterior installations and elsewhere as required for corrosion resistance. Use toothed steel or lead expansion-bolt devices for drilled-in-place anchors. Furnish inserts, as required, to be set into concrete or masonry work.

2.05 FABRICATION

A. General: Provide manufacturer's standard signs of configurations indicated.

1. Welded Connections: Comply with AWS standards for recommended practices in shop welding. Provide welds behind finished surfaces without distortion or discoloration of exposed side. Clean exposed welded surfaces of welding flux and dress exposed and contact surfaces.

2. Mill joints to tight, hairline fit. Form joints exposed to weather to exclude water penetration.

3. Preassemble signs in the shop to greatest extent possible. Disassemble signs only as necessary for shipping and handling limitations. Clearly mark units for reassembly and installation, in location not exposed to view after final assembly.

4. Conceal fasteners if possible; otherwise, locate fasteners where they will be inconspicuous.

2.06 FINISHES, GENERAL

A. Comply with NAAMM's "Metal Finishes Manual for Architectural and Metal Products" for recommendations for applying and designating finishes.

B. Protect mechanical finishes on exposed surfaces from damage by applying a strippable, temporary protective covering before shipping.

C. Appearance of Finished Work: Variations in appearance of abutting or adjacent pieces are acceptable if they are within one-half of the range of approved Samples. Noticeable variations in the same piece are not acceptable. Variations in appearance of other components are acceptable if they are within the range of approved Samples and are assembled or installed to minimize contrast.

2.07 ALUMINUM FINISHES

A. Baked-Enamel Finish: AA-C12C42R1x (Chemical Finish: cleaned with inhibited chemicals; Chemical Finish: acid-chromate-fluoride-phosphate conversion coating; Organic Coating: as specified below). Apply baked enamel complying with paint manufacturer's written instructions for cleaning, conversion coating, and painting.

1. Organic Coating: Thermosetting, modified-acrylic enamel primer/topcoat system complying with AAMA 2603 except with a minimum dry film thickness of 1.5 mils, medium gloss.

2.08 ACRYLIC SHEET FINISHES

A. Colored Coatings for Acrylic Sheet: For copy and background colors, provide colored coatings, including inks, dyes, and paints, that are recommended by acrylic manufacturers for optimum adherence to acrylic surface and that are UV and water resistant for five years for application intended.

PART 3 EXECUTION

3.01 INSTALLATION

A. Signage shall be installed at the locations detailed or as directed, in accordance with the manufacturer's recommendations and approved shop drawings.

1. Install signs level, plumb, and at heights indicated, with sign surfaces free of distortion and other defects in appearance.

B. Wall-Mounted Signs: Comply with sign manufacturer's written instructions except where more stringent requirements apply.

1. Mechanical Fasteners: Use non-removable mechanical fasteners placed through predrilled holes. Attach signs with fasteners and anchors suitable for secure attachment to substrate as recommended in writing by sign manufacturer.

2. Signs Mounted on Glass: Provide matching opaque plate on opposite side of glass to conceal mounting materials.

C. Damaged units or components shall be removed and replaced at no additional cost to the Owner.

D. Signage shall be cleaned to the satisfaction of the Engineer using the approved methods, upon completion of the installation and again, just prior to acceptance of the project.

3.02 SIGNAGE SCHEDULES

A. Room Identification

ROOM IDENTIFICATION SIGNAGE SCHEDULE		
Signage Name	**Mounting Location**	
	Adjacent to Door	**Door Side**
Electrical Room	DA-100A	Exterior of Building
Electrical Room	DA-100B	Exterior of Building

B. Restrictive Signage

RESTRICTIVE SIGNAGE SCHEDULE		
Quantity	**Sign Copy**	**Location**
2	NOTICE No Smoking	One on exterior wall at each exterior door DA-100A, DA-100B.
2	DANGER High Voltage Electric	One on exterior wall at exterior door DA-100A and DA-100B.
2	Fire Extinguisher	At Each Fire Extinguisher
4	DANGER Diesel Fuel – No Smoking	At each side of Fuel Tank
	WATER IS UNSAFE AND IS NOT TO BE USED FOR DRINKING, WASHING, OR COOKING PURPOSES	At each WHS and hose bibb location
	Generator-JEA Isolation Point Located in Electrical Room	Mounted at JEA Revenue Meter

RESTRICTIVE SIGNAGE SCHEDULE		
Quantity	**Sign Copy**	**Location**
	Generator-JEA Isolation Point	Mounted at Service Entrance Main Breaker.

END OF SECTION

THIS PAGE INTENTIONALLY LEFT BLANK

© 2019 CDM Smith
All Rights Reserved

SECTION 11306
SUBMERSIBLE SOLIDS HANDLING PUMPS

PART 1 GENERAL

1.01 SCOPE OF WORK

A. Furnish all labor, materials, equipment and incidentals required and install, place in operation and field test eight dry-pit submersible wastewater pumps as shown on the Drawings and specified herein. The equipment to be furnished and installed shall be as shown on the Drawings and shall include pumps, motors, VFDs, control panels and control systems, and appurtenances, all tested and ready for operation.

B. These Specifications are intended to give a general description of what is required, but do not cover all details which will vary in accordance with the requirements of the equipment as offered. It is, however, intended to cover the furnishing, factory testing, delivery and complete installation and field testing of all materials, equipment and appurtenances for the complete pumping units as herein specified, whether specifically mentioned in these Specifications or not.

C. Pump motors, cables and appurtenances shall be rated for operation in a Class I Division 1, Group D hazardous environment.

D. The Contractor shall require the pump manufacturer to coordinate pump and motor design with the manufacturer of the variable frequency drives and shall furnish the drives as specified in Section 16400.

1.02 RELATED WORK

A. Submittals are included in Section 01300.

B. Operation and maintenance is included in Section 01730.

C. Warranties are included in Section 01740.

D. Concrete work and the installation of anchor bolts are included in Division 3; however, anchor bolts for these units as recommended by the pump manufacturer shall be furnished by the Contractor under this Section.

E. Instrumentation work is included in Division 16.

F. Pump operation and control shall be as described in Division 16.

G. Valves, mechanical piping and appurtenances and pipe hangers and supports are included in Division 15.

H. Electrical work is included in Division 16.

1.03 REFERENCE STANDARDS

A. Design, manufacturing and assembly of elements of the equipment herein specified shall be in accordance with, but not limited to, published standards of the following, as applicable:

1. American Gear Manufacturers Association (AGMA)
2. American Institute of Steel Construction (AISC)
3. American Iron and Steel Institute (AISI)
4. American Petroleum Institute (API)
5. American Society of Mechanical Engineers (ASME)
6. American National Standards Institute (ANSI)
7. American Society for Testing Materials (ASTM)
8. American Welding Society (AWS)
9. American Bearing Manufacturers Association (ABMA)
10. Hydraulic Institute Standards (current editions)
11. Institute of Electrical and Electronics Engineers (IEEE)
12. National Electric Code (NEC)
13. National Electrical Manufacturers Association (NEMA)
14. Occupational Safety and Health Administration (OSHA)
15. Steel Structures Painting Council (SSPC)
16. Underwriters Laboratories, Inc. (UL)
17. Factory Mutual (FM)

B. Where reference is made to one of the above standards, the revision in effect at the time of bid opening shall apply.

1.04 SYSTEM DESCRIPTION

A. The system will pump raw wastewater. The equipment to be furnished under this Section shall include eight submersible wastewater pumps (2 Jockey and 6 Primary) in a dry-pit booster configuration, with motors, VFDs and accessories, all as specified herein and as shown on the Drawings. Refer to section 16900 and 16950 for system description and control narratives. Contractor shall coordinate and be fully responsible for proper operation and compatibility between items in this scope of work and items in Division 16.

1.05 QUALIFICATIONS

A. To assure unity of responsibility, the pumps, motors, and other auxiliary equipment, and materials specified in this Section shall be furnished and coordinated by the pump manufacturer (Manufacturer) who shall assume responsibility for the satisfactory operation of

the entire pumping system including pumps, motors, and accessories. Manufacturer shall coordinate their design with the VFDs furnished by the electrical panel manufacturer.

B. The pumps and other equipment covered by this Specification shall be standard production units of the manufacturers, currently available and listed in the respective manufacturer's catalogs. The pumps furnished shall be in accordance with the Hydraulic Institute Standards and shall be designed, constructed and installed in accordance with the best practice and methods, and shall operate satisfactorily when installed.

C. The Manufacturer shall have an authorized warranty center within a 300-mile radius of the job site, fully staffed with factory trained mechanics, and equipped with a stock of all necessary spare parts for each model of pump furnished under this Contract. The service facility shall be an established entity prior to delivery of equipment for this project.

D. All equipment furnished under this Specification shall be new and unused, shall be the standard product of manufacturers having a successful record of manufacturing and servicing similar equipment and systems to that specified herein for a minimum of five years.

E. The pumping equipment shall be furnished complete with accessories required and shall meet the detailed requirements of the Specifications.

F. Prior to manufacture, a statement shall be forwarded to the Engineer indicating that the required vibration analyses outlined in this Part have been made and that the specified limitations will be met. For the dynamic analysis described, minimum and maximum operating speeds will be in accordance with the operating speeds required to satisfy the conditions of operation specified in Paragraph 2.02. The pump manufacturer shall perform the dynamic analysis presented in the following paragraph.

1. Structural dynamic analysis of the combined pump and motor - The structural dynamic analysis shall predict that no first or second bending mode frequencies will exist within a pump speed and vane pass frequency range from 20 percent below minimum operating speed of 24 Hz, to 20 percent above maximum operating speed.

2. Lateral rotodynamic analysis - The lateral rotodynamic analysis shall identify and predict that the first lateral critical speed shall be at least 20 percent above the maximum pump speed and vane pass frequency or 20 percent below the minimum pump speed. Any pump component excited resonant frequency shall be no closer than plus or minus 20 percent of the natural frequency of any part of the installed assembled pumping unit. Any lateral rotordynamic frequencies not satisfying the +/- 20 margins shall not result in a forced damped response that will allow contact between the shaft and journal bearings.

3. Campbell diagrams shall be submitted, documenting the structural lateral, rotating component lateral analysis results, graphically demonstrating the separation margins specified above.

G. Acoustic resonance prediction/correction – the pump manufacturer shall engage the services of a specialty vibration analysis firm (Mechanical Solutions, Inc. (MSI) of Whippany, NJ, or equal) to perform a computer-based evaluation of the acoustic resonance potential of the as-designed pump station suction and discharge manifold systems. The acoustic resonance evaluation shall consider whether the pump blade pass frequencies could excite an acoustic resonace in either the suction or discharge piping manifolds that could lead to acoustic

resonance pressure induced adverse hydraulic phenomena. If the potential exists for acoustic resonance issues, the analysis firm shall recommend corrective measures for implementation by the Contractor (under a contract work directive as discussed in the General Conditions). The specialty firm shall provide field testing during start-up procedures to verify that the recommended corrections were properly installed and prevent acoustic resonance issues from occuring.

1.06 SUBMITTALS

A. Copies of all materials required to establish compliance with the Specifications shall be submitted in accordance with the provisions of the General Conditions and Section 01300. Submittals shall include at least the following:

1. Shop and erection drawings showing all important details of construction, dimensions and anchor bolt installation requirements.

2. Descriptive literature, bulletins, and/or catalogs of the equipment. Sufficient data shall be submitted to document previous production of each pump model proposed for use on this Contract.

3. Data on the characteristics and performance of each pump. Data shall include guaranteed performance curves to ANSI/HI 11.6 acceptance grade 1U, based on actual factory tests of similar units, which show that they meet the specified requirements for head, flow rate, efficiency, NPSH3, submergence and horsepower. Curves shall be submitted on 8-1/2-inch by 11-inch sheets, at as large a scale as is practical. Curves shall be plotted from zero flow at shut off head to pump flow rate at minimum specified total head (TH). The POR and AOR (refer to ANSI/HI 9.6.3) shall be clearly shown on the curves. Catalog sheets showing a family of curves will not be acceptable.

4. The total weight of the equipment including the weight of the single largest item.

5. Complete wiring diagrams and schematics of all power and control systems showing wiring requirements between all system components, motors, sensors, control panels and related systems.

6. A complete total bill of materials of all equipment.

7. A list of the manufacturer's recommended spare parts to be supplied, with the manufacturer's current price for each item. Include gaskets, seals, etc. on the list. List bearings by the bearing manufacturer's numbers only.

8. All submittal data required by the General Conditions.

9. Complete motor data, including, but not limited to:
   a. Type of enclosure design
   b. Rated horsepower
   c. Rated voltage
   d. FLA
   e. Starting current
   f. LRA
   g. LR KVA

h. NEMA starting code letter and insulation code letter
i. RPM
j. Input power in kW at nameplate rating
k. Starting calculations
l. Cable size
m. Efficiency at 50%, 75% & 100% load, and power factor at 50%, 75% & 100% load
n. Winding temperature rise
o. Vibration design limits
p. Speed torque curves
q. Recommended trip and alarm settings for temperature and vibration protective devices
r. Power and control cable size and materials of construction , details of cable sealing method, description and type of motor thermal protection, description of insulation system and service factor.
s. Submit a certified statement from the motor manufacturer that the motors are capable of a minimum of 12 variable frequency drive starts per hour and continuous operation on the power supply from the variable frequency drives to be furnished without affecting their design life for bearings or windings. This requirement does not replace nor relieve submittal requirements under Division 16.

10. Certified agreement to the conditions of the warranty.

11. Submit description of factory test plan including test procedures and equipment.

12. Submit for approval results of factory testing and field testing.

13. Critical speed analyses report including the specified Campbell diagrams and a statement of guarantee that the critical speed analyses as required in Paragraph 1.05G. of this Section have been completed and that the specified limitations will be met.

B. In the event that the equipment offered does not conform with all of the detailed requirements of the Specifications, describe completely all nonconforming aspects. Failure to describe any and all deviations from the specifications will be cause for rejection.

1.07 OPERATING INSTRUCTIONS

A. Operating and Maintenance Manuals shall be furnished. The manuals shall be prepared specifically for equipment furnished and installed on this Contract and shall include all required cuts, drawings, equipment lists, descriptions, etc. that are required to instruct operating and maintenance personnel unfamiliar with such equipment. The number and special requirements shall be as specified in the Section 01730.

B. The Contractor shall include in his bid price the services of a direct employee from the pump Manufacturer for two, eight hour sessions. The first eight hour period shall be to inspect for proper installation. The second eight hour period shall be to instruct the Owner's personnel for proper operation and maintenance of the pumps. VFD training shall be as specified in Division 16.

C. The Manufacturer shall provide detailed manuals to supplement the training courses. The manuals shall include specific details of equipment supplied and operations specific to the project.

D. The Manufacturer shall make use of teaching aids, manuals, slide/video presentations, etc. After the training services, such materials shall be delivered to Owner.

1.08 TOOLS AND SPARE PARTS

A. The Manufacturer shall furnish a complete list of recommended spare parts, gaskets, lubricants, sealants and heat transfer medium necessary for the first five years operation of each pumping system.

1.09 PRODUCT HANDLING

A. All equipment and parts shall be properly protected so that no damage or deterioration will occur during a prolonged delay from the time of fabrication, including storage in accordance with Manufacturer's requirements until final delivery to the job site.

B. Factory assembled parts and components shall not be dismantled for shipment unless permission is received in writing from the Engineer.

C. Finished surfaces of all exposed pump openings shall be protected by wooden blanks, strongly built and securely bolted thereto or by other approved means.

D. Finished iron or steel surfaces not painted shall be properly protected to prevent rust and corrosion.

E. After hydrostatic or other tests, all entrapped water shall be drained prior to shipment and proper care shall be taken to protect parts from the entrance of water during shipment, storage and handling.

F. Each box or package shall be properly marked to show its net weight in addition to its contents.

1.10 WARRANTY

A. All equipment supplied under this section shall be warranted for a period of one year by the Contractor and the Manufacturer. Warranty period shall commence on the date of Owner acceptance, as outlined in Division 1 and in Division 0.

B. In addition, Manufacturer shall warrant the pump/motor for a period of five years, prorated after the initial 1.5 years. This Manufacturer warranty duration includes the warranty period identified above and as outlined in Divisions 1 and 0.

C. The equipment shall be warranted to be free from defects in workmanship, design and materials. If any part of the equipment should fail during the warranty period, it shall be replaced in the machine(s) and the unit(s) restored to service at no expense to the Owner.

D. The Manufacturer 's warranty period shall run concurrently with the Contractor 's warranty period. No exception to this provision shall be allowed.

E. Refer to Section 01740 for additional warranty requirements.

1.11 PROJECT/SITE REQUIREMENTS

A. Environmental Requirements: for dry pit application suitable for continuous duty operation under the following service conditions:

1. Environment: Indoor raw wastewater pumping application involving occasional severe duty conditions.

2. Area classification: Non-hazardous.

3. Maximum ambient temperature: 40 degrees C.

4. Altitude: up to 45 feet above MSL.

PART 2 PRODUCTS

2.01 GENERAL

A. The pumping units required under this Section shall be complete including pumps and motors with proper alignment and balancing of the individual units. All parts shall be so designed and proportioned as to have liberal strength, stability, and stiffness and to be especially adapted for the work to be done. Ample room shall be provided for inspection, repairs, and adjustments.

B. Each pump shall be provided with a solid steel baseplate and sole plate(s). Baseplates and sole plates shall be designed to be rigidly support the pumping units and shall be accurately anchored into position. All necessary anchor bolts, plates, nuts, and washers shall be furnished and installed by the Contractor in strict accordance with the Manufacturer's recommendations.

C. Stainless steel nameplates giving the name of the manufacturer, the rated flow rate, head, speed, and all other pertinent data shall be permanently attached to each pump and/or motor. Additional stainless steel nameplates shall be provided to be installed by the Contractor on the VFD enclosures or other above grade location as instructed by the Engineer such that the pumps do not need to be removed to gather the information.

D. The pumps shall be totally submersible, solids handling, rotodynamic pumps with submersible close coupled motors designed to pump raw, unscreened wastewater.

2.02 CONDITIONS OF OPERATION

A. The pumps shall be as manufactured by Flygt (Xylem). The Jockey Pumps shall be NT 3202 LT 3~619, and Primary Pumps shall be Model NT3306/705 3~670.

B. Each pump shall be designed for the conditions of service tabulated as follows and shall operate within the system head curve envelope as appended. All pumps with specific speed less than 4,500 (US units) shall have a continuously rising head performance curve for stable pump operation from the minimum head operating point to the shut-off head. For pumps where specific speed is greater than or equal to 4,500, the intersection of the pump head and system head curves shall be used to demonstrate stable operation.

C. The pumps shall operate throughout the entire operating range with the maximum vibration velocity in inches per second RMS unfiltered, measured in the field less than the requirements of ANSI/HI 11.6-latest edition.

D. Each pump shall be designed for the conditions of operation tabulated as follows:

Item Description	Pump Design Conditions	
Application	Jockey Pumps	Primary Pumps
Number of Pumps (operating/standby)	2 (1/1)	6 (5/1)
Maximum Motor Full Load Speed (FLS) (rpm)	1185	1185
Maximum Allowable Motor (HP)	35	140
Motor Design Voltage/Phase/Frequency	460/3/60	460/3/60
Maximum Anticipated Pumped Fluid Temperature (deg F)	90	90
Minimum Pump Discharge Size (inches)	12	12
Minimum Pump Suction Size (inches)	12	14
Minimum Pump Shut-Off Head at Motor FLS (feet)	45	130
Secondary TH (feet)	36	108
Minimum Flow Rate at Secondary TH (gpm)	1,200	2,000
Minimum Overall Efficiency at Secondary TH (%)*	35	48
Intermediate (Design) Flow Rate (gpm)	3,200	5,000
Minimum TH at Intermediate (Design) Flow Rate (feet)	26	80
Minimum Overall Efficiency at Intermediate (Design) Flow Rate (%)*	65	72
Minimum Overall Efficiency at Best Efficiency Point (%)*	67	73
Minimum Best Efficiency Point Flow Rate (gpm)	3,600	5,400
Minimum Best Efficiency Point TH (feet)	23	75
Primary TH (feet)	13	20
Minimum Flow Rate at Primary TH (gpm)	5,000	9,000
Minimum Overall Efficiency at Primary TH Flow Rate (%)*	53	38
Minimum Size Solids Passing (inches)	3	3
Maximum NPSH3 at Primary TH (feet)	25	55
Required Pump Speed Range (% FLS)	40-100	40-100(1)

* Note that minimum overall efficiencies listed are "wire-to-water" in accordance with ANSI/HI 11.6 – latest edition.

(1) Single Pump Operation will be speed limited to approximately 45 Hz prevent run-out.

E. Each pumping unit and its driving equipment shall be designed and constructed to withstand the maximum turbine run-away speed of the unit due to back flow through the pump.

2.03 PUMP CONSTRUCTION

A. The overall pump design shall combine high efficiency, low required NPSH3, the ability to handle high solids concentrations effectively. The impeller/casing design shall result in a passage free of surfaces to which solid or fibrous materials can adhere and shall be capable of passing fibrous and nonwoven materials as found in domestic wastewater. The design shall permit low liquid velocities and gradual acceleration and change of flow direction of the pumped media.

B. All external pump and motor parts shall be of close grained cast iron, ASTM A48 Class 35B construction, with all parts in contact with wastewater protected by corrosion resistant coatings. All external bolts and nuts shall be type 316 stainless steel.

C. Impellers shall be constructed of ASTM A532 IIC hardened cast iron. Impellers shall be dynamically balanced.

D. The impeller shall be a rotodynamic, semi-open, solids handling type capable of passing solids either due to internal clearances or other features to facilitate solids processing including a wear plate with groove. The wear plate to impeller clearance shall be easily adjustable without the need for disassembly of the pump or the need to add or remove shims. The impeller may include pump out vanes on the upper shroud to reduce axial thrust and minimize clogging due to debris accumulation around the mechanical seal. The impeller shall be dynamically balanced to the ISO 1940 G6.3 standard to provide smooth, vibration free operation.

E. A casing wear plate shall be installed to provide efficient sealing between the casing and the impeller. The wear plate shall consist of a stationary stainless steel plate installed in the lower half of the casing. Alternative materials and design approaches shall be as approved by the Engineer.

F. Each pump shall be provided with a balanced tandem mechanical shaft seal system. The upper (inner) of the tandem set of seals shall operate in an seal lubricant chamber located just below the stator housing. At a minimum, this set shall contain one stationary silicon carbide and one positively driven rotating carbon ring and shall function as an independent secondary barrier between the pumped liquid and the stator housing. The lower (outer) of the tandem set of seals shall function as the primary barrier between the pumped liquid and the stator housing. This set shall consist of a stationary ring and a positively driven rotating ring, both of which shall be either tungsten carbide or silicon carbide. Each interface shall be held in contact by its own Hastelloy-C® or Elgiloy® spring system. The seal body shall be Type 316 stainless steel. The o-rings shall be FKM (Viton)® The seals shall require neither maintenance or adjustment, but shall be easily inspected and replaceable. Seal design shall provide pressure applied to the outside diameter of the face. Shaft seals with conventional double mechanical seals containing either a common single or double spring acting between the upper and lower units are not acceptable nor equal to the dual independent seal specified.

G. The minimum pump discharge size, shall be the minimum allowable nominal diameter of the discharge connection provided for attachment to the discharge piping, as shown on the Drawings, except as allowed otherwise by this specification. Unless otherwise noted, the diameter of the opening at the connection between the pump and the discharge should normally be the same as the minimum specified discharge size.

H. Provide suction inlet flange adapter of the same material as the casing with access port for maintenance. Coatings for the inlet flange adapter shall match those used for the pump casing.

I. The pump casing shall have a machined ASTM B16.1 125 lb flange connection to attach to the discharge piping. The pump baseplate and sole plates shall be bolted to the concrete support base piers of the dry pit arrangement with Type 316 stainless steel J-type cast-in anchor bolts, monel nuts and accessories. The baseplate and associated accessories shall conform to the following:

1. The baseplate shall be proportioned to support each entire pump/motor assembly and the loads (including the results of the dynamic analysis) to which it may be subjected during operation. It shall be properly supported on split sole plates and anchored and located as recommended by the pump Manufacturer. Lifting lugs or eye bolts, special slings, strongbacks, or other devices necessary to handle the pump during loading, unloading, erection, installation, and subsequent disassembly and assembly shall be furnished.

2. Sole plates shall be provided under each pump baseplate. The sole plates shall be installed, leveled and grouted in accordance with API RP 686, Chapter 5 – Mounting Plate Grouting. Jacking bolts and Five Star non-shrink epoxy grout as specified below shall be provided for leveling the baseplate assembly.

3. An anchor bolt layout shall be provided by the Pump Manufacturer to aid in placement of anchor bolts. All leveling jacking bolts shall be backed off after grouting so that they do not support any of the load.

4. The grout for use in grouting under the sole plates supported by jack bolts (no shim stacks) shall be Five Star DP Epoxy Grout expansive, non-shrink, low exothermic epoxy system, or approved equal, mixed and applied according to the manufacturer's directions.

5. The presence of a Manufacturer' representative during the pouring of the epoxy grout as well as the use of rigid non-absorbing formwork and a head box are mandatory. The surface of the formwork in contact with the epoxy grout shall be covered with a layer of paste wax to facilitate removal. Clearance between the concrete surface and the bottom surfaces of the sole plates shall be per manufacturer's recommendation.

6. The concrete surface to be in contact with the epoxy grout shall be chipped to present a slightly rough surface and remove the laitance. The surface shall then be cleaned of all dust, moisture and oil. A thin layer of leveling grout shall be placed under metal discs that the jack bolts shall bear on. A one-inch minimum diameter by 1/4 inch thick stainless steel disk, with full radiused edges shall be placed under each jack bolt. All metal edges in contact with the epoxy grout shall be radiused to a minimum 1/2 inch radius in order to prevent stress risers in the epoxy grout. Plastic vent tubes, sized and spaced per manufacturer's recommendation, shall be placed under the sole plates to vent air during grouting and prevent voids in the epoxy grout.

7. The annular space between the anchor bolts and the anchor bolt sleeve shall be filled with expanding urethane foam. The threads of both the anchor bolts and jack bolts in contact with the grout shall be covered with paste wax and a layer of duct tape. After all alignment tolerances are met, the anchor bolts shall be tightened snug to prevent movement during the pour. The epoxy grout shall not be allowed to extend above the top edge of the sole plates. After the epoxy grout has fully cured, within 24 to 48 hours after pouring, the jack bolts shall be removed and the anchor bolts tightened to the torque levels as recommended by the Manufacturer.

8. The threaded jack bolt holes shall be coated with grease and the jack bolts cleaned of the paste wax and duct tape then reinserted and secured in position with a lock nut to within 1/4 inch of the bottom of the hole. After grouting, edges shall be chipped and patched lo present a smooth finish.

2.04 SUBMERSIBLE MOTORS

A. Pump motors shall be inverter duty rated, housed in an air filled, water-tight casing, and shall have Class F or better non-hygroscopic insulated windings which shall be moisture resistant. Oil filled motor housing are not acceptable. The motors shall be suitable for use with the VFDs specified in Division 16. The motor stator shall be dipped and baked three times in a VPI process and heat shrunk fitted into the stator housing. As an alternative, trickle impregnation method may be used for motor stator windings. The use of bolts, pins or other fastening devices requiring penetration of the stator housing is not acceptable. Motors shall be NEMA Design B, equipped with a 1.15 service factor, as defined in the NEMA MG1 standard, based upon the nameplate horsepower rating for utility power service. A service factor of 1.0 will be acceptable when driven by a VFD (non-sinusoidal power supply). The motor insulation system shall be rated at 155° C or better. Motor shall be capable to operate in an ambient temperature of 40° C continuously with Class B temperature rise. The motor shall be NEMA Starting Code G or H, or better. Motors shall be non-overloading and capable of sustaining a minimum of ten starts per hour. Upper motor bearing shall be insulated. Motors shall be designed for a minimum power factor of 0.80 at full load. The motor efficiency shall comply with the minimum required at full load to meet the wire-to-water efficiency specified in paragraph 2.02.

B. Pump motors shall have cooling characteristics suitable to permit continuous operation in a non-submerged condition. Each motor shall incorporate three overheat sensing devices, one in each motor winding. These devices shall trip at 140°C. The sensing device shall be wired into the pump controls in a manner such that if the device operates, the pump will shut down. The temperature device shall be self-resetting.

C. The pump motor shall incorporate a closed-loop cooling circuit with an integrated cooling pump rated for continuous duty in a completely dry mode; as well as; in a fully submerged condition without damage. The cooling jacket shall be cast iron ASTM A48 class 30 or steel. The coolant pump impeller shall be mounted directly on the motor shaft between the tandem mechanical seals to circulate coolant fluid into the top inter-space between the cooling jacket and motor housing, over the surface of the motor, through ducts in the bearing housing and into a casing heat exchanger. Heat losses from the motor shall be transferred to the fluid pumped in the casing heat exchanger, which forms a structural unit together with the discharge cover of the pump. After passing through the volute-casing heat exchanger, the coolant shall return to the suction side of the internal coolant pump (impeller). Coolant shall be an environmentally safe glycol based antifreeze or an environmentally safe food grade oil rated for use down to temperatures of minus 20° C (minus four degrees Farinheight).

D. The pump/motor shaft shall be constructed of type 416, 420 or type 431 stainless steel. When operating at the pump design point, the shaft shall have a maximum deflection of 0.2 mm at the lower seal face and a maximum deflection of 0.45 mm at the wear ring area. The shaft shall rotate on permanently lubricated ball bearings properly sized to withstand the axial and radial forces. The ABMA Minimum L-10 bearing life shall be at least 30,000 hours rated at the pump BEP.

E. The pump motor with its appurtenances and cable shall be capable of continuous submergence underwater without loss of watertight integrity to a depth of 65 feet. All mated surfaces shall be machined, fitted with O-rings for watertight sealing.

F. The pumps shall be provided with a cable entry design that shall preclude specific torque requirements to insure a water tight and submersible seal. The cable entry shall be certified by UL or FM to have passed pull-testing requirements. The cable entry junction chamber and motor shall be separated by a stator lead, sealing gland or terminal board, which shall isolate the motor interior from foreign material gaining access to the pump motor top. The cable entry system shall be field serviceable. The power and control cable entry into the lead connection chamber may also be epoxy encapsulated for positive moisture sealing. A BUNA-N cable grommet shall be provided in addition to the epoxy sealed leads.

G. Cables, Conduits and Accessories

1. The pumps shall be supplied with power and sensor conductors. Pump motor cables shall be sized to meet applicable NEC requirements. The cable shall consist of a type SPC or SEOW insulated cable with a double jacketed protection system. The cable shall have a neoprene or chlorinated polyethylene outside and synthetic rubber inside, and shall exceed industry standards for oil, gas and sewage resistance. Individual conductors shall be of type RUW. Pump cables shall be provided of sufficient length so that the cables will be continuous between the pump and the disconnect with no splices being allowed.

2. If more than one cable is being provided per pump, the Contractor shall furnish and provide for the installation of the additional conduits, etc. as required for each additional cable. Only one cable per conduit will be allowed at the pump station. Conduit sized per manufacturers recommendations but not smaller than 3/4-inch.

3. Contractor shall furnish all required stainless steel conduit hardware and fittings.

4. Coordinate the installation of the above materials with the Manufacturer.

2.05 VARIABLE FREQUENCY DRIVES

A. The speed control for variable speed pumps shall be Variable Frequency Drives, as specified in Section 16400, suitable for installation as shown on the Drawings. The VFDs furnished shall have an established record of successful performance with the submersible motors supplied by the Pump Manufacturer.

B. The Variable Frequency Drives shall be supplied by a JEA pre-approved pump station electrical panel manufacturer and shall be completely coordinated with the pumps and pump driving motors and shall include all internal auxiliaries required to meet the functional specifications.

C. The Variable Frequency Drives shall conform to all requirements stipulated in this Section and Division 16, Electrical, and shall be designed for a speed range of 40% to 100% of full load motor speed.

D. The Variable Frequency Drives shall be compatible with the motors provided by the Manufacturer.

2.06 PUMP/MOTOR PROTECTION

A. Each pump/motor unit(s) shall be equipped with the following protection and monitoring sensors:

1. Three motor winding bi-metalic thermal switches, one installed in each motor stator phase winding, and connected in series to monitor and protect the winding from over temperature operation. The thermal switches shall open, activating an alarm and stopping the motor should a high temperature event occur.

2. One water-in-oil or water-in-air capacitive type or float type moisture sensor installed in the mechanical seal lubrication chamber (between the inner and outer mechanical seals) to alarm should there be intrusion of water into the chamber.

3. Vibration sensors shall be on the exterior of the pump/motor unit. The vibration sensor shall be capable of monitoring vibration velocity in in/sec RMS unfiltered. The vibration sensor shall be installed to the outside of the pump casing near the upper bearing housing in accordance with manufacturer's recommendations. A separate sensor mounting base equipped with mounting stud shall be connected to the pump with epoxy-based adhesive, to which the sensor shall be mounted.

4. Each pump shall be provided with a vertical and horizontal vibration transmitter. The transmitter shall be Wilcoxon model PCC421VR-10-R6 with 2 wire 4-20ma output, Velocity, RMS, 1.0 ips full scale, 2 pin MIL-C5015 connector. The sensor shall also be provided with a cable R6Q Mill 2 pin high temperature connector for waterproof applications with twisted pair, braided shield for a continuous run from the sensor to the panel.

5. All relays associated with the monitoring and protective devices furnished.

2.07 PRESSURE GAUGES

A. Each pump shall be equipped with a suction and discharge pressure gauge as shown on the Drawings. Pressure gauges shall be bronze bourdon tube Ametek U.S. Gauge, SOLFRUNT Duragauge Series 1980 Black Phenol Turret type with Type 316 stainless steel rack and pinion movement or equal. The gauges shall be glycerin filled. Gauges shall be calibrated from 15" Hg - zero to 30-psig for suction service and from zero to 100 psig for discharge service. Gauges shall be 4-1/2-in diameter furnished with 1/4-in inlet. All fittings and cocks shall be Type 316 stainless steel. Pressure gauges shall be furnished with isolating diaphragm seals as shown on the Drawings.

2.08 SHOP PAINTING

A. Each pump and associated equipment shall be shop-primed and finished-coated in accordance with the Manufacturer's standard practice prior to shipment. Color shall be selected by the Engineer and an adequate supply of touch-up paint shall be supplied by the Manufacturer.

B. All interior and exterior wetted surfaces of pumps, exterior and interior of cooling jacket and exterior of motor enclosure shall be thoroughly cleaned, dry and free of all rust, mill scale, grease, dirt, other foreign matter and supplied with Manufacturer's standard coatings meeting the requirements in Sections 09901and 09902.

C. All nameplates shall be properly protected during painting.

PART 3 EXECUTION

3.01 INSTALLATION

A. Installation shall be in strict accordance with the Manufacturer's instructions and recommendations in the locations shown on the Drawings. The Contractor shall furnish all required oil and grease for initial operation, if required, in accordance with the Manufacturer's recommendations. Anchor bolts shall be set in accordance with the Manufacturer's recommendations.

B. Upon completion of each pump installation, the Manufacturer shall inspect the unit and submit a certificate stating that the installation of the equipment is satisfactory, that the equipment is ready for operation, and that the operating personnel have been suitably instructed in the operation, lubrication and care of each unit.

3.02 INSPECTION AND TESTING

A. General

1. The Engineer shall be notified in writing prior to initial shipment and/or testing, in ample time so that arrangements can be made for inspection by the Engineer.

2. Field tests shall not be conducted until such time that the pumping system, including controls, is complete and ready for testing.

B. Factory Pump Test

1. All pumps shall receive a non-witness factory test.

2. The Manufacturer shall factory test all pumps prior to shipment in accordance with the Hydraulic Institute standards, latest version. Flow rate, total head and Input KW shall be tested and recorded for at least five points on the pump performance curve. Test shall be performed to demonstrate that the pumps meet ANSI/HI 11.6 acceptance grade 1U for the design point and 1E for remaining specified points. The five points shall include the points specified in pump performance table in Paragraph 2.02.

3. The Manufacturer shall perform hydrostatic test on the pressure-containing parts in accordance with ANSI/HI 11.6. Test shall be conducted on each pump prior to final coating and shipment.

4. The Manufacturer shall perform the following test on each pump prior to shipment from factory:
   a. Megger motor and pump for insulation breaks or moisture.
   b. Prior to submergence, the pump shall be run dry and checked for correct rotation.
   c. Pump shall be run for a minimum of 30 minutes in a submerged condition.
   d. The pump shall be removed from test tank, meggered immediately for moisture and upper and lower seal unit shall be checked for water intrusion.
   e. A written certification test report regarding the above tests shall be submitted for approval prior to shipment.Field Pump Test

5. As specified in Paragraph 1.07 B., the Manufacturer shall furnish the services of a factory representative who shall have complete knowledge of proper operation and maintenance to inspect the final installation and supervise the test run of the equipment. The Manufacturer shall include in his price, a minimum of eight hours of a representative's time for the above tests in addition to the time specified in Paragraph 1.07 B.

6. Written test procedures shall be submitted to the Engineer for approval 30 days prior to testing. Contractor shall coordinate flow diversion and temporary shutdown of existing station with JEA.

7. The Contractor shall furnish all water, power, facilities, labor, materials, supplies and test instruments required to conduct the field testing.

8. The Final Acceptance Test shall demonstrate that all items of these Specifications have been met by the equipment as installed and shall include, but not be limited to, the following tests:
   a. That all units have been properly installed and are in correct alignment.
   b. The Contractor shall check for correct lubrication in accordance with manufacturer's instructions. The Contractor shall check direction of rotation of all motors and reverse connections, if necessary.
   c. That the units operate without overheating or overloading any parts and without objectionable vibration.
   d. That there are no mechanical defects in any of the parts.
   e. That the pumps can deliver the specified total head and flow rate to demonstrate that the pumps generally meet the requirements specified (factory performance test is the basis of pump acceptance).
   f. That the pump sensors and controls perform satisfactorily as to sequence control, correct start and stop pressures, and proper pressure alarm functions.

9. If the pump performance does not meet the specifications, corrective measures shall be taken or pumps shall be removed and replaced with pumps which satisfy the conditions specified.

10. A thirty-day continuous operating period of the entire pumping system will be required before acceptance. If pumping system fails during the test period, the test shall be restarted (including reset of time to zero) after repair (or replacement) has been completed.

C. Field Vibration Testing

1. After installation and as soon as conditions permit full speed operation, and in the presence of the Engineer, have the vibration tests performed in accordance with ANSI/HI 11.6 on each unit to (a) prove compliance with specified limitations, and (b) prove that there are no field installed resonant conditions due to misalignment, the foundation, or the connecting piping and its supports, when operating at any speed within the specified operating range.

© 2019 CDM Smith
All Rights Reserved

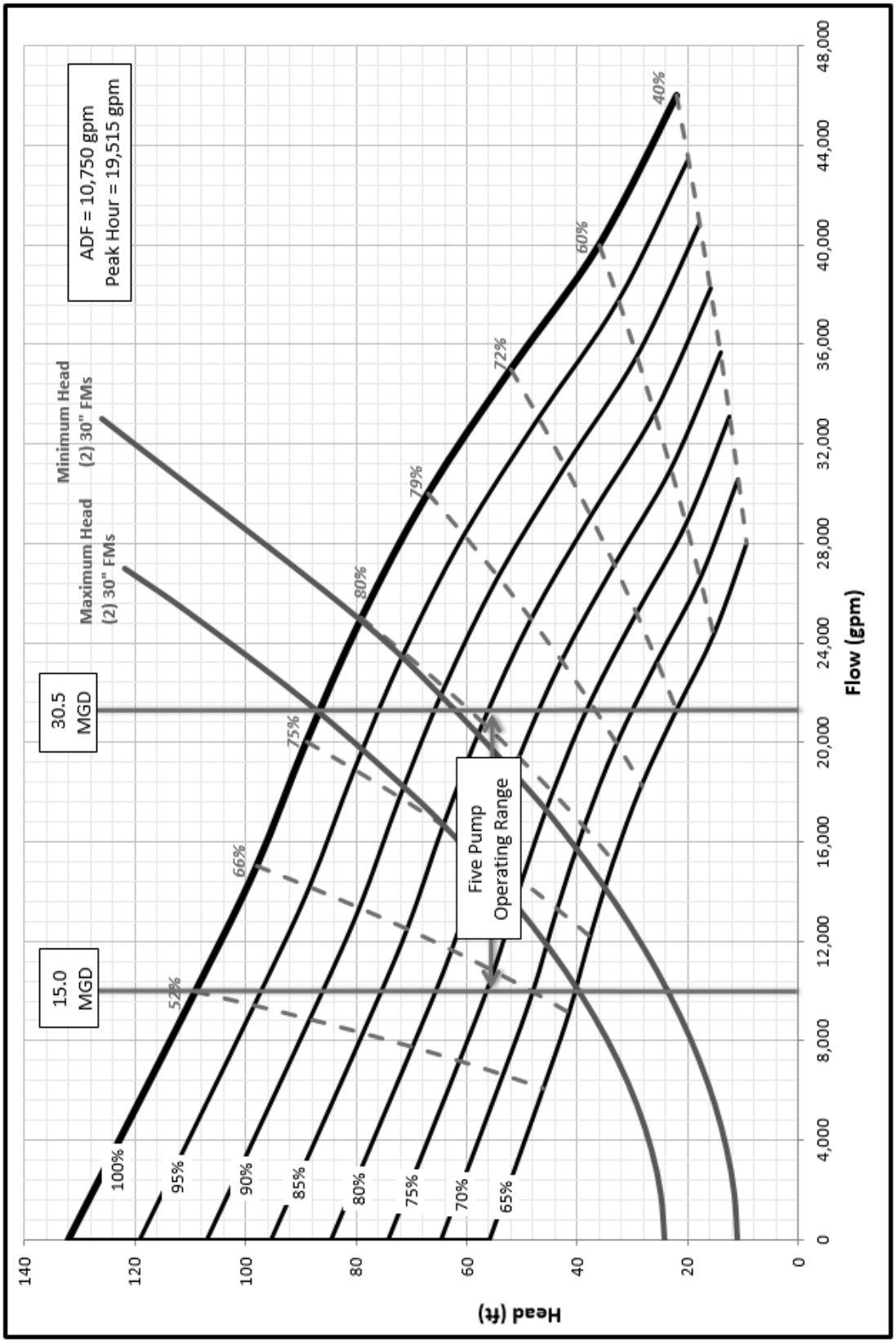

© 2019 CDM Smith
All Rights Reserved

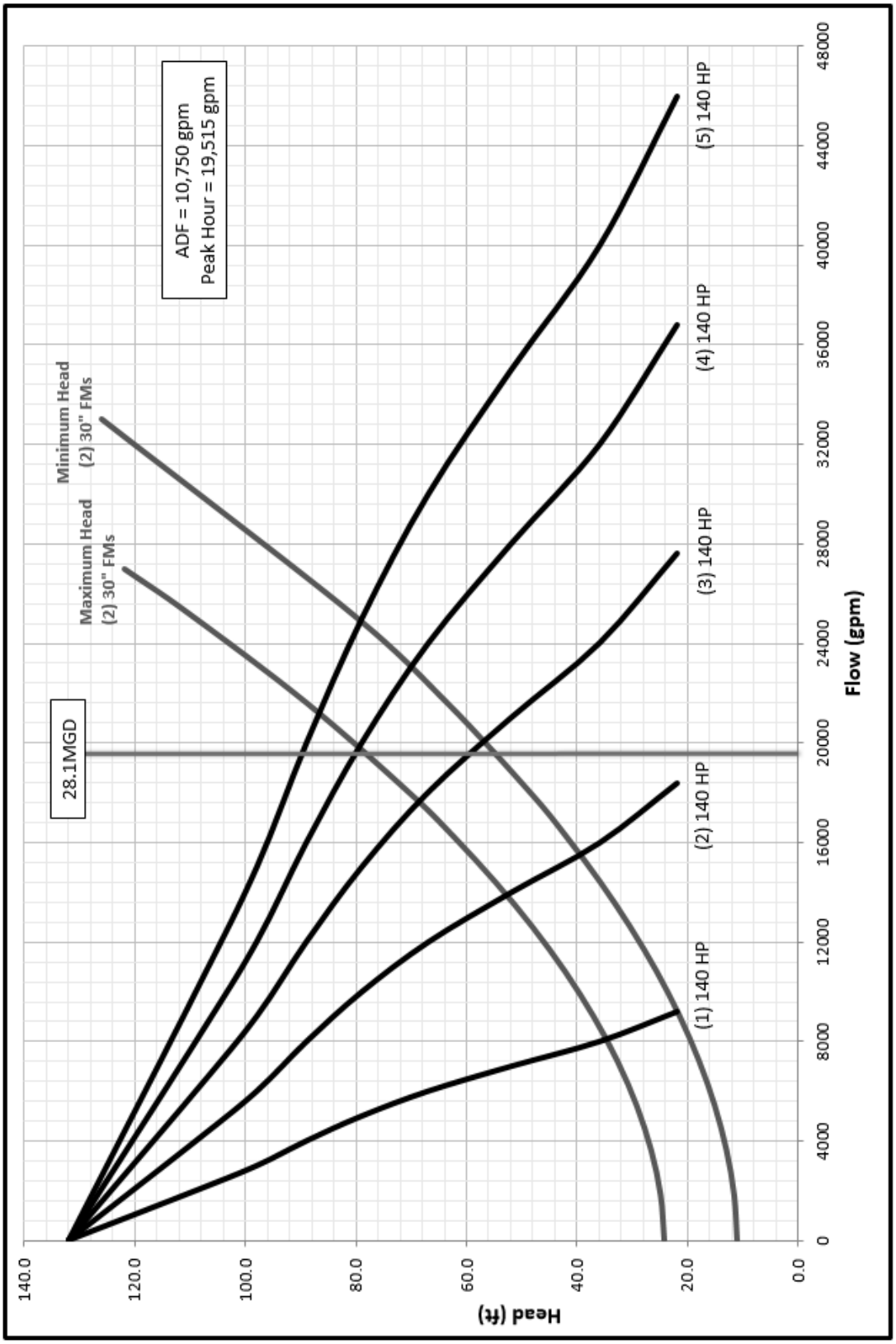

© 2019 CDM Smith
All Rights Reserved

END OF SECTION

© 2019 CDM Smith
All Rights Reserved

SECTION 11313
VACUUM PRIMING SYSTEM

PART 1 GENERAL

1.01 SCOPE OF WORK

A. The Contractor shall furnish all labor, materials, equipment and incidentals required to furnish and install, complete, and ready for operation an engineered and factory assembled, packaged vacuum priming system, complete with all necessary accessories as shown on the Drawings and as specified herein.

B. The packaged vacuum priming system shall consist of a vacuum receiver tank, duplex vacuum pumps, control panel, and interconnecting piping and valves, assembled and mounted on a single skid base.

C. The vacuum priming system supplier shall also supply two (2) vacuum priming valves (VPV) suitable for unscreened wastewater service (one VPV for each existing diesel backup raw sewage pump). Priming valves shall have integral water control switches to confirm primed condition for the associated influent raw sewage pump startup.

D. The components of the packaged vacuum priming system form an integrated system and are to be furnished by a single supplier, who shall provide all equipment and appurtenances required regardless of manufacture and is responsible for the satisfactory operation of the entire system.

1.02 SUBMITTALS

A. Copies of all materials required to establish compliance with the specifications will be submitted in accordance with the provisions of Section 01300. Submittals will include at least the following:

1. Certified shop and erection drawings showing all important details of construction, dimensions and anchor bolt locations.

2. Descriptive literature, bulletins, and/or catalogs of the equipment. All pertinent design data for the vacuum priming system including vacuum pump HP, priming capacity in CFM, vacuum capacity, etc. shall be provided.

3. Data on the characteristics and performance of the system components.

4. The total weight of the equipment including the weight of the single largest item.

5. A complete total bill of materials of all equipment.

6. A list of the manufacturer's recommended spare parts with the manufacturer's current price for each item. Include gaskets, packing, etc. on the list. List bearings by the bearing manufacturer's numbers only.

7. Complete control diagram and control panel details. Wiring diagram/power requirements for the water sensors supplied with the priming valve shall be submitted.

B. Operating Instructions

1. Operating and maintenance manuals will be furnished as specified in Section 01730. The manuals will be prepared specifically for this installation and will include all required catalog cuts, drawings, equipment lists, descriptions, etc. that are required to instruct operation and maintenance personnel unfamiliar with such equipment.

2. The operating and maintenance instructions shall be provided as required in Section 01730. The maintenance instructions shall include troubleshooting data and full preventative maintenance schedules and complete spare parts lists with ordering information.

1.03 QUALITY ASSURANCE

A. All equipment shall be furnished by manufacturers who are fully experienced, reputable, and qualified in the manufacture of the equipment to be furnished.

B. The Contractor shall be responsible for assuring the quality and compatibility of the component parts of the system. The work shall comply with the detailed process, mechanical materials and construction requirements of this specification and shall include all appurtenances necessary for a complete and operable system.

C. The vacuum priming system shall be as manufactured by one of the following Named manufacturers:

1. Lynn Engineered Systems Model APD-50RVAP/120H

2. DeZurik APCO. Model 4-A

No Alternate Manufacturers/Suppliers are included in these specifications. Substitute Manufacturers/Suppliers are subject to review and approval per Section 01300.

1.04 DESCRIPTION OF SYSTEMS

A. The vacuum priming units shall be a factory-built package system capable of maintaining two (2) diesel influent raw sewage pumps, and pipes primed and ready for operation under all conditions of pump operation.

B. The system shall be designed and capable of creating a sufficient vacuum condition to overcome a 10 foot water column lift in addition to any priming system header piping losses and shall be suitable for a wastewater environment high in sulfur dioxide and other corrosive gases/vapors, under the following conditions:

Number of Units	1
Service	Raw Sewage/Wastewater
	Vacuum Priming System
System Volume to be maintained under vacuum conditions	420 cf
System Capacity (ACFM) (per pump)	35

Vacuum Pumps	2
Maximum Horsepower	3
Receiver Tank – Minimum Volume	120 gallons

1.05 DELIVERY, STORAGE AND HANDLING

A. All parts shall be properly protected so that no damage or deterioration will occur during a prolonged delay from the time of shipment until installation is completed and the unit and equipment are ready for operation.

B. All equipment and parts must be properly protected against any damage during shipment. Store all equipment in accordance with the manufacturer's instruction.

C. Factory assembled parts and components shall not be dismantled for shipment unless permission is received in writing from the Engineer.

D. The finished surfaces of all exposed flanges shall be protected by wooden or equivalent blank flanges, strongly built and securely bolted thereto.

E. Finished iron or steel surfaces not painted shall be properly protected to prevent rust and corrosion.

1.06 MAINTENANCE

A. Furnish all special tools and test equipment required for the proper servicing of all equipment as specified in Section 01170. All such tools and test equipment shall be furnished in a suitable steel tool chest complete with lock and duplicate keys.

B. All spare parts shall be properly protected for long periods of storage and packed in containers that are clearly identified with indelible markings as to contents.

1.07 WARRANTY

A. Provide equipment warranty as required in Section 01740.

PART 2 PRODUCTS

2.01 GENERAL

A. The packaged vacuum priming system shall be factory prefabricated on a structural steel skid with all components mounted and all interconnecting wiring and piping completed and factory tested prior to shipment. The only field connections are to be the connection of the system to the connection of the vacuum suction and discharge air piping, and three-phase power connection.

B. The packaged vacuum priming system shall be a stored vacuum type, working in concert with sewage-suitable vacuum priming valves mounted on the discharge nozzle of each influent raw sewage pump as shown on the Drawings.

C. The system suction manifolds, as well as the vacuum sensing lines shall be provided with shut-off cocks for gauges and vacuum switches.

D. Any connections to process piping shall be made with stainless steel tubing with compression fittings. Plastic tubing is not acceptable.

E. All electrical wiring shall be complete between the skid mounted components and the control panel.

F. All parts shall be so designed and proportioned as to have liberal strength and stiffness and to be especially adapted for the work to be done. Ample room and facilities shall be provided for inspection, repairs, and adjustments.

G. Stainless steel nameplates giving the name of the manufacturer, the rated capacity, head, speed, serial number, model number, horsepower, voltage, amperes, and all other pertinent data will be attached to each device and the system.

2.02 VACUUM PRIMING SYSTEM COMPONENTS [1 COMPLETE UNIT REQUIRED]

A. The vacuum tank, pumps, control panel, gauges, valves, and piping and valves, and other components shall be a single unit factory assembled to the receiving tank and supported by a structural steel skid.

B. Vacuum Receiver Tank

1. The vacuum tank shall meet ASME VIII Division 1 vacuum vessel requirements and shall be fabricated of 316 series stainless steel. The tank shall be outfitted gauge glass for monitoring of accumulated water and a 1-inch drain NPT tank and ball valve to remove any liquids that may accumulate in the receiving tank.

2. The tank exterior shall include any welded supports or attachments as necessary for support of vacuum pumps, control panels, piping and valves, or other system components proposed to be mounted on the tank.

3. Tank shall include suitable ports for connection of required high level and low vacuum sensor switches.

C. Vacuum Pumps

1. Vacuum pumps shall be dry reciprocating piston type pumps. All parts of vacuum pump in contact with the evacuated air (sewage gas) shall be 316 stainless steel.

2. Vibration isolation pads shall be furnished as required to prevent transfer of vibration from the pumps to the support skid, receiving tank, and structure.

D. Piping

1. All system piping and conduit shall be 316 SS.

2. Inlet air connection shall be minimum 2-inches diameter with flanged connection.

3. Foul air exhaust connection shall be minimum of 4-inch diameter. Exhaust connection shall be provided with and oil/grease P-trap with 316 SS petcock valve for drainage.

E. Filters

1. In-line filter shall be provided on pump inlet as required.

F. Gauges

1. A stainless steel vacuum gauge of a minimum of 3-in diameter shall be securely mounted to the unit and shall display to a minimum of -30 mm Hg. Gauge shall be Ashcroft T5500E.

G. Valves

1. Process valves shall be in accordance with Section 15120 and as specified herein.

2. All valves shall be 316 SS type suitable for continuous exposure to raw sewage and sewage gases.

3. An automatic vacuum relief valve shall be provided to prevent excessive vacuum condition in the receiver tank.

4. Discharge side check valves and suction and discharge side isolation ball valves shall be provided for each vacuum pump.

H. Receiver Tank Level Switches

1. Receiver tank shall include a high level switch to signal high water in tank level to the unit's control panel.

2. Receiver tank shall include a low vacuum level switch to signal low vacuum condition to the unit's control panel,

2.03 CONTROLS

A. Each vacuum priming system unit shall be provided with a NEMA 4X stainless steel local control station (LCS) control panel, pre-assembled and mounted to the system skid assembly.

B. LCS shall include all necessary motor starters, relays, fuses, 110V control power transformer, contacts, and other components necessary for operation of the vacuum pumps and vacuum priming system controls instrumentation.

C. All local control station control panels shall be constructed in accordance with Specification Section 01179.

D. The LCS shall include HAND/OFF/AUTO three-way switches for manual and automatic operation of each vacuum pump.

E. In AUTO operation, the LCS shall initiate vacuum pump operation as required to restore and maintain pre-set vacuum condition in the vacuum receiver tank and downstream vacuum piping.

F. The LCS shall include the following local light indicators on the LCS
   a. Vacuum Pump 1 Running.
   b. Vacuum Pump 2 Running.
   c. Low Vacuum in Tank
   d. High Water in Tank

G. Control panel shall include dry contacts to communicate High Water Alarm, Vacuum Pump 1 Run, and Vacuum Pump 2 Run to the SCADA system.

2.04 VACUUM PRIMING VALVES (VPV) [2 TOTAL UNITS REQUIRED]

A. Vacuum priming valves shall be ductile iron with exterior and interior epoxy coating suitable for use in domestic wastewater with 2-inch threaded connection on the inlet/pump side of the valve. Priming float shall be suitable for discharge pressures up to 100-ft of water column and the vacuum negative pressure.

B. Vacuum priming valves shall be fitted with flushing connections to allow for valve flushing without removal from the line.

C. Vacuum priming valves shall be supplied with a high water level switch suitable for wired connection to raw influent sewage pumps control for signal of primed condition.

2.05 ANCHOR BOLTS

A. Contractor shall furnish 316 SS anchor bolts, nuts, and washers, as required for mounting of the equipment. Number and size of anchor bolts shall be as per the vacuum priming system

2.06 SURFACE PREPARATION AND SHOP PAINTING

A. All surfaces shall be prepared and shop primed as part of the work under this section. Surface preparation and shop priming shall be as specified in Division 9.

PART 3 EXECUTION

3.01 FACTORY TESTING

A. The Manufacturer shall complete a full operational test of the complete vacuum priming system assembly in his facility to confirm and verify complete installation and proper operational of the system prior to shipment. Provide certification of completed testing with equipment shipment.

3.02 INSTALLATION

A. Vacuum priming system shall be installed on a concrete equipment pad in accordance with the Contract Drawings.

B. Installation will be in strict accordance with the manufacturer's instructions and recommendations in the locations shown on the drawings. Installation will include furnishing any required oil and grease for initial operation. The grades of oil and grease will be in

accordance with the manufacturer's recommendations. Anchor bolts will be set in accordance with manufacturer's recommendations.

C. Supply all anchor bolts, temporary lift equipment, power, water, labor, and all other incidentals required for the proper installation of the vacuum priming system units.

3.03 FIELD PAINTING

A. Field painting is included under Painting, Division 9.

3.04 INSPECTION AND TESTING

A. Vendor Test and Start-Up Services

1. The equipment manufacturer(s) shall furnish the services of a competent and experienced representative(s), who has complete knowledge of proper operation and maintenance of the equipment to inspect the installed equipment, supervise the initial test runs, provide start-up support, and perform field performance testing. A representative should be provided for—at a minimum—one 8-hour day (excluding travel time).

2. The above stated times are minimums and are exclusive of travel time and time required for training Owner's personnel, as specified elsewhere. If there are difficulties in start-up, testing, or operation of the equipment additional services may be required and shall be provided at no travel additional cost to the Owner.

B. The completed vacuum priming system installation shall be fully tested for proper operation of the complete system, by experienced personnel prior to being placed in service.

C. Upon completion of installation of equipment, piping, and valves shall be tested for a 2-hour period. All leaks, malfunctions or defects shall be repaired at the Contractor's expense prior to acceptance.

END OF SECTION

THIS PAGE INTENTIONALLY LEFT BLANK

© 2019 CDM Smith
All Rights Reserved

SECTION 12484
FLOOR MATS

PART 1 GENERAL

1.01 SCOPE OF WORK

A. Furnish all labor, materials, equipment and incidentals required and install floor mats as shown on the Drawings and as specified herein.

1.02 RELATED WORK

A. Concrete work is included in Division 3.

1.03 SUBMITTALS

A. Submit, in accordance with Section 01300, shop drawings showing materials and construction with substrate surface preparation installation procedures. Submittals shall include the following:

1. Two samples of each type of mat proposed and proposed adhesive. Sample size shall be approximately 6-in by 6-in.

1.04 REFERENCE STANDARDS

A. ASTM International

1. ASTM D178 - Standard Specification for Rubber Insulating Matting

2. ASTM D 5603 - Standard Classification for Rubber Compounding Materials-Recycled Vulcanizate Particulate Rubber

B. Where reference is made to the above standard, the revision in effect at the time of bid opening shall apply.

PART 2 PRODUCTS

2.01 FLOOR MATS

A. Electrically Energized Equipment Mats: Rubber electric insulating type mats conforming to ASTM D178, Type I, Class 2; branded continuously on back. Bevel edges of mats or attach electric insulating rubber reducing strips as approved to provide a non-trip perimeter.

1. Locations: Provide as indicated.

2. Size: As indicated, minimum 1/4-in thick, 3-ft wide, in lengths equal to bench length or equipment piece length.

3. Materials and Construction: Construct electrically energized equipment mats of prime quality rubber compound, free of calendaring and curing defects, with narrow continuous longitudinal corrugations.

4. Color: Black.

5. Product: Provide one of the following:
   a. "ASTM Switchboard" by American Floor Products Company, Inc.
   b. "Switchboard Runner Matting," by Musson, R. C. Rubber Co.
   c. "Corrugated Switchboard," by Tennessee Mat Co.
   d. Or equal.

2.02 ACCESSORIES

A. Provide waterproof adhesive, approved by the manufacturer, for securing floor mat to substrate.

2.03 FABRICATION

A. Floor Mats: Shop fabricate units to greatest extent possible in sizes indicated. Unless otherwise indicated, provide single unit for each mat installation; do not exceed manufacturer's recommended maximum sizes for units that are removed for maintenance and cleaning. Where joints in mats are necessary, space symmetrically and away from normal traffic lanes. Miter corner joints in framing elements with hairline joints or provide prefabricated corner units without joints.

PART 3 EXECUTION

3.01 INSTALLATION

A. Lay floor mats in place when and where directed.

END OF SECTION

© 2019 CDM Smith
All Rights Reserved

SECTION 15050
PIPING - GENERAL REQUIREMENTS

PART 1 GENERAL

1.01 SCOPE OF WORK

A. This Section specifies the basic administrative and testing requirements for piping. Specific piping materials, systems and related installation and testing requirements are specified in other Sections of Division 2 and 15.

1.02 RELATED WORK

A. Piping materials and systems are included in other Sections of Division 2 and 15.

B. Valves are included in Section 15100.

1.03 SUBMITTALS

A. Submit, in accordance with Section 01300, general submittals for piping and piping systems are listed below. It is not intended that all submittals listed below be provided for all piping materials and systems. Refer to individual System or Piping Sections for specific submittals.

B. Shop Drawings and Product Data

1. Piping layouts in full detail.

2. Location of pipe hangers and supports.

3. Location and type of backup block or device to prevent joint separation.

4. Large scale details of wall penetrations and fabricated fittings.

5. Schedules of all pipe, fittings, special castings, couplings, expansion joints and other appurtenances.

6. Catalog cuts of joints, couplings, harnesses, expansion joints, gaskets, fasteners and other accessories.

7. Brochures and technical data on coatings and linings and proposed method for application and repair.

C. Samples

D. Design Data

E. Test Reports

1. Certified shop tests showing compliance with appropriate standard.

2. Copies of all field test reports, signed by Contractor and Engineer.

F. Certificates

1. Copies of certification for all welders performing work in accordance with ANSI B31.1.

G. Manufacturer's Installation (or application) instructions.

H. Statement of Qualifications

I. Manufacturer's Field Report

J. Project Record Document

K. Operation and Maintenance Data in accordance with Section 01730.

L. Warranties

1.04 REFERENCE STANDARDS

A. ASTM International

1. ASTM A307 - Standard Specification for Carbon Steel Bolts and Studs, 60,000 psi Tensile Strength

B. American National Standards Institute (ANSI)

1. ANSI B16.5 - Pipe Flanges and Flanged Fittings

2. ANSI B31.1 - Power Piping

C. American Welding Society (AWS)

1. AWS B2.1 - Specification for Welding Procedure and Performance Qualifications

D. American Water Works Association (AWWA)

1. AWWA Manual M11 - Steel Pipe - A Guide for Design and Installation

E. American Society of Mechanical Engineers (ASME)

F. Underwriters Laboratories (UL)

G. Factory Mutual (FM)

H. Where reference is made to one of the above standards, the revision in effect at the time of bid opening shall apply.

1.05 QUALITY ASSURANCE

A. All materials shall be new and unused.

B. Install piping to meet requirements of local codes.

C. Provide manufacturer's certification that materials meet or exceed minimum requirements as specified. Reference to standards such as ASTM and ANSI shall apply to those versions in effect at the time of bid opening.

D. Coordinate dimensions and drilling of flanges with flanges for valves, pumps and other equipment to be installed in piping systems. Bolt holes in flanges to straddle vertical centerline.

E. Reject materials contaminated with gasoline, lubricating oil, liquid or gaseous fuel, aromatic compounds, paint solvent, paint thinner and acid solder.

F. Pipe-joint compound, for pipe carrying flammable or toxic gas, must bear approval of UL or FM.

G. Unless otherwise specified, pressures referred to in all Piping Sections are expressed in pounds per square in gauge above atmospheric pressure, psig and all temperature are expressed in degrees Fahrenheit (F).

1.06 DELIVERY, STORAGE AND HANDLING

A. During loading, transportation and unloading take care to prevent damage to pipes and coating. Carefully load and unload each pipe under control at all times. Place skids or blocks under each pipe in the shop and securely wedge pipe during transportation to ensure no injury to pipe and lining.

PART 2 PRODUCTS

2.01 MATERIALS

A. Specific piping materials and appurtenances are specified in the respective Piping or System Sections.

B. General installation materials shall be as specified below.

1. Flanged Joints. Bolt and nuts, Type 316 stainless steel, bolt number and size same as flange standard; studs - same quality as machine bolts; 1/8-in thick SBR rubber gaskets with cloth insertions; rust-resistant coatings.

2. Temporary Plugs shall be standard plugs or caps which are suitable for permanent service.

3. Flexible Connections shall be flanged spool type, 180 degrees F maximum service, single filled arch with synthetic rubber tube and cover, steel-ring reinforced synthetic fiber carcass, with flanges drilled to 150 lb ANSI B16.5. Steel retaining rings, control rods and compression sleeves shall be provided where shown and as required for the working pressure of the system in which the joint is installed. All flexible joints shall be rated for the working pressure of the system in which they are installed.

PART 3 EXECUTION

3.01 GENERAL

A. All dirt, scale, weld splatter, water and other foreign matter shall be removed from the inside and outside of all pipe and sub-assemblies prior to installing.

B. All pipe joints and connections to equipment shall be made in such a manner as to produce a minimum of strain at the joint.

C. Install piping in a neat manner with lines straight and parallel or at right angles to walls or column lines and with risers plumb. Run piping so as to avoid passing through ductwork or directly under electric light outlets and/or interference with other lines. All work shall be accomplished using recognized methods and procedures of pipe fabrication and in accordance with the latest revision of applicable ANSI Standards, ASME Codes and Pipe Fabrication Institute Standards.

1. Use full length of pipe except where cut lengths are necessary. Do not spring or deform piping to make up joints.

2. Pipe shall be cut square, not upset, undersize or out of round. Ends shall be carefully reamed and cleaned before being installed.
   a. Bending of pipe is not permitted. Use fittings for all changes in direction.

3. Do not use bushings except where specifically approved by the ENGINEER or OWNER's Representative. Reducers shall be eccentric to provide for drainage from all liquid-bearing lines and facilitate air removal from water lines.

4. Verify the locations and elevations of any existing piping and manholes before proceeding with work on any system. Any discrepancies between the information shown on the Drawings and the actual conditions found in the field shall be reported at once to the ENGINEER or OWNER’s Representative. No claim for extra payment will be considered if the above provision has not been complied with.

5. Where lines of lower service rating tie into services or equipment of higher service rating the isolation valve between the two shall conform to the higher rating.

6. Mitering of pipe to form elbow is not permitted.

7. All piping interiors shall be thoroughly cleaned after installation and kept clean by approved temporary closures on all openings until the system is put in service. Closures should be suitable to withstand the hydrostatic test.

8. [End caps on pre-cleaned pipe shall not be removed until immediately before assembly. All open ends shall be capped immediately after completion of installation.]

D. Test Connections

1. Provide 1/2-in female NPT test connection equipped with 1/2-in brass plug on all pump suction and discharge lines. Where indicated on the Drawings, test connections should be equipped with bar stock valve and gauge.

E. Unions

1. Unions screwed or flanged shall be provided where indicated and in the following locations even if not indicated.
   a. In long runs of piping to permit convenient disassembly for alterations or repairs.
   b. In by-passes around equipment.

c. In connections to tanks, pumps and other equipment between the shut-off valve and the equipment.
d. In connections on both sides of traps, controls and automatic control valves.

F. Vents and Drains

1. Provide vents and drains in the following places:
   a. Water Lines - Vents at high points and drains at low points.
   b. Air Lines - Drains at low points.

3.02 UNIONS

A. Use unions to allow dismantling of pipe, valves and equipment.

3.03 WELDING

A. Welding in accordance with ANSI B31 and AWS B3.0.

B. Install welding fittings on all welded lines. Make changes in direction and intersection of lines with welding fittings. Do not miter pipes to form elbows or notching of straight runs to form tees, or any similar construction. Do not employ welder who has not been fully qualified in above specified procedure and so certified by approved welding bureau or similar locally recognized testing authority.

3.04 FLANGED JOINTS

A. Make flanged joints with bolts; bolt studs with nut on each end; or studs with nuts where one flange is tapped. Use number and size of bolts conforming to same ANSI Standard as flanges. Before flanges pieces are assembled, remove rust resistant coating from machined surfaces, clean gaskets and smooth all burrs and other defects. Make up flanged joints tight, care being taken to prevent undue strain upon valves or other pieces of equipment.

3.05 SLEEVE COUPLINGS

A. Install tierods, pipe clamps or bridles when sleeve type couplings or fittings are used in piping system where indicated, and at changes in direction or other places as necessary, to prevent joints from pulling apart under pressure. Use bridles and tierods at least 3/4-in in diameter, except where tierods replace flange bolts of smaller size, in which case fit with nut on each side of pair of flanges. Joint harnessing shall conform, as a minimum, to the requirements for the bolts and tie bolt lugs as set forth in AWWA Manual M11.

3.06 WALL SLEEVE SEALS

A. Use expandable rubber segmented sealing device with corrosion-resistant fasteners to make watertight the annular space between pipe and sleeve. Determined the required inside diameter of each individual wall opening or sleeve to fit the pipe and seal it to assure a watertight joint as recommended by the manufacturer, before ordering, fabricating or installing. Install pipe concentrically through wall sleeve. Install and tighten seal per manufacturer's instructions.

3.07 TESTING

A. Test all pipelines for water/gas tightness as specified in the Piping or System sections. Furnish all labor, testing plugs or caps, pressure pumps, pipe connections, gauges and all other equipment required. Testing shall be performed in accordance with one or more of the testing procedures appended to this Section as specified in each Piping or System Section. All testing shall be performed in the presence of the Engineer or Owner's representative.

B. Repair faulty joints or remove defective pipe and fittings and replace as approved by the Engineer. Retest.

3.08 DISINFECTION

A. After satisfactory testing, all potable, protected water collection and distributed systems shall be thoroughly disinfected with a solution of not less than 50 parts per million of available chlorine. The disinfecting solution shall be allowed to remain in the system for a period of 3 hours after which time all valves and faucets shall be opened and the system shall be flushed with clean water.

B. Water being flushed from structures or pipelines after disinfection with a chlorine residue of 2 mg/l or greater, shall be treated with a dechlorination solution, in a method approved by the Engineer, prior to discharge.

3.09 HYDROSTATIC TEST

A. Scope: This test shall be used to hydrostatically test piping systems for structural integrity and leaks. The test shall be performed at ambient temperature unless otherwise specified.

B. Test Fluid

1. Water should be used as the test fluid whenever possible. In those systems where water cannot be used the test fluid may be either the one to be used in the system or the one agreed upon by the Engineer and the Contractor.

C. Test Equipment

1. Water - Of sufficient capacity to deliver the required test pressure.

2. Strainer - On inlet side of the pump to prevent foreign matter from entering the system.

3. Valves - Shall be provided on the suction and discharge side of the pump.

4. Heater - To allow heating of the test fluid when elevated temperatures are required for test.

5. Relief Valve - Set at a pressure to relieve at 20 to 25 percent above the required test pressure.

6. Pressure Gauge(s) - Capable of reaching 50 percent over the test pressure. These should be located at the pump discharge and any other place deemed convenient by the Contractor.

7. Pressure gauges and relief valves shall be checked for accuracy before use in test procedures.

D. Preparation for Test

1. Determine the fluid to be used for the test, and, if other than ambient temperature is required, what the test temperature will be.

2. When a fluid other than water is used for a test, the equipment used for the test shall be of a material compatible with the test fluid. Normally this would be equal to the piping material.

3. Vents shall be provided at the high points of the system and drains provided where means of venting or draining do not exist.

4. Remove or block off, all relief valves, rupture discs, alarms, control instruments, etc, that shall not be subjected to the test pressure.

5. All discs, balls, or pistons from check valves shall be removed if they interfere with filling of the system. Open all valves between inlet and outlet of the section to be tested.

6. Connect pump and provide temporary closures for all of the external openings in the system. Use caution to ensure that the closures are properly designed and strong enough to withstand the test pressure.

7. All joints, including welds, are to be left uninsulated and exposed for examination during test.

8. A joint previously tested in accordance with this Section may be covered or insulated.

9. Piping designed for vapor or gas shall be provided with additional temporary supports, if necessary, to support the weight of the test liquid.

10. Expansion joints shall be provided with temporary restraint for additional pressure under test or shall be isolated from the test.

11. Flanged joints, where blanks are inserted to isolate equipment during the test, need not be tested.

E. Test Pressure

1. The hydrostatic test pressure shall be 1-1/2 times the design pressure unless otherwise specified in the System Section.

F. Test Procedure

1. Allow the test fluid to enter the system. Open vents to allow displacement of all entrapped air. For all pipelines exceeding 500-ft in length, the maximum rate of filling shall be limited to that which produces a maximum nominal flow velocity of one foot per second in the pipe to be tested.

2. Close vents and restrict personnel in the test area to those involved in the test.

3. Raise the pressure slowly with the pump until the predetermined test pressure is reached. Maintain pressure for duration of time specified in System Section, keeping personnel at a safe distance.

4. Reduce the pressure about 20 percent and hold it at that point while the entire system is carefully inspected for leaks, cracks, or other signs of defects.

5. If defects are found, the pressure shall be released, the system drained, the defects corrected and the test repeated.

6. After a satisfactory test has been completed, the line shall be drained.

G. Flushing

1. Lines tested with water shall be completely drained.

2. Lines shall be flushed, after test.

H. Test Records

1. Records shall be maintained of all tests performed.

2. Test records shall include:
   a. Date of Testing
   b. Identification of Piping Tested
   c. Test Fluid
   d. Test Pressure
   e. Signatures of Contractor and Engineer

3. If leaks are found, they shall be noted, on the record. After correction, retesting as specified for original test.

4. Records of test shall be maintained by the Contractor and furnished to the Engineer.

3.10 SERVICE PRESSURE TEST

A. Scope: This test shall be used to test piping systems using service pressure and the fluid for which the system is used.

1. It shall not be used to test piping systems conveying combustible or flammable liquids or systems that comply with ANSI B31 codes.

B. Test Fluid

1. The fluid for which the system is designed shall be the test fluid.

C. Test Equipment

1. A pressure gauge capable of registering 25 psi over the design pressure shall be installed down-stream from the supply shut-off valve if one is not included in the system.

D. Preparation for Test

1. Insulated lines shall have all joints left exposed until completion of the test.

E. Test Pressure

1. The test pressure shall be equal to the maximum pressure that the line will be subjected to under normal operating conditions as determined by the Engineer.

F. Test Procedure

1. Liquids
   a. See that all personnel not involved in the test vacate the area.
   b. Allow the system fluid to enter the system slowly while venting the air at the extreme far and uppermost points. For all pipelines exceeding 500-ft in length, the maximum rate of filling shall be limited to that which produces a maximum nominal flow velocity of one foot per second in the pipe to be tested.
   c. When the system is full and all air is vented, close the vents.
   d. Allow the pressure in the system to build up to the full line pressure.
   e. Inspect entire system for leaks.

2. If leaks are found, the lines shall be relieved of pressure, purged if necessary, and repaired. Tests shall be repeated for repaired sections.

G. Test Records

1. Records shall be maintained of all tests performed.

2. Test records shall include:
   a. Date of Testing
   b. Identification of Piping Tested
   c. Test Fluid
   d. Test Pressure
   e. Signatures of Contractor and Engineer

3. If leaks are found, they shall be noted on the record. After correction, retesting is required.

4. Test records shall be maintained by the Contractor and furnished to the Engineer.

END OF SECTION

© 2019 CDM Smith
All Rights Reserved

THIS PAGE INTENTIONALLY LEFT BLANK

© 2019 CDM Smith
All Rights Reserved

SECTION 15066
STAINLESS STEEL PIPE AND FITTINGS

PART 1 GENERAL

1.01 SCOPE OF WORK

A. Furnish all labor, materials, equipment and incidentals required and install, test, complete and ready for operation all stainless steel pipe as shown on the Drawings and as specified herein.

B. Where the word "pipe" is used it shall refer to pipe, fittings, hangers, supports and appurtenances unless otherwise noted.

C. The work includes, but is not necessarily limited to:

1. Furnishing and installing interior, above grade, stainless steel pipe, fittings and specials with screwed, butt welded, or flanged and plain ends.

1.02 RELATED WORK

A. JEA Water and Wastewater Standards (January 2017 or Latest Edition) – Section 429 and 435

B. Testing is included in Section 01445.

C. Concrete work is included in Division 3.

D. Field painting is included in Section 09902.

E. Instrumentation and controls, other than those specified herein, are specified under their respective Sections of Division 16.

F. Valves and appurtenances are included in Section 15100.

G. Piping specialties are included in Section 15120.

H. Pipe hangers and supports are included in Section 15140.

1.03 SUBMITTALS

A. Submit, in accordance with Section 01300, the following:

1. Within 30 calendar days following effective date of the Agreement submit the name of the pipe, fitting and appurtenances manufacturers and a list of the material to be furnished by each manufacturer. Also include information on local representative for each manufacturer, if product is sold through a distributor.

2. Shop drawings including piping layouts and schedules, including dimensioning, fittings, expansion joints, locations of valves and appurtenances, joint details, wall penetration details, methods and locations of supports and all other pertinent technical specifications for all piping to be furnished. Shop drawings shall include all data and information required for the complete piping systems. All dimensions shall be based on the actual equipment to be furnished. Types and locations of pipe hangers and/or supports shall be

shown on the piping layouts for each pipe submittal. Not all dimensions will be checked by the Engineer, nor will detailed review be performed. Contractor shall be responsible for accurate dimensioning of piping systems.

3. Proposed cleaning method, including pre-cleaning, descaling, chemicals to be used, or mechanical descaling method and final cleaning/passivation

4. Certifications that welders are qualified, in accordance with ANSI B31.1, Paragraph 127.5 for shop and project site welding of pipe work.

1.04 REFERENCE STANDARDS

A. ASTM International

1. ASTM A312 - Standard Specification for Seamless and Welded Austenitic Stainless Steel Pipes.

2. ASTM A530 - Standard Specification for General Requirements for Specialized Carbon and Alloy Steel Pipe.

3. ASTM A778 - Standard Specification for Welded, Unannealed Austenitic Stainless Steel Tubular Products.

B. American National Standards Institute (ANSI)

1. ANSI B16.1 - Cast Iron Pipe Flanges and Flanged Fittings Classes 25, 125 and 250.

2. ANSI B16.9 - Factory-Made Wrought Steel Buttwelding Fittings.

3. ANSI B36.19 - Stainless Steel Pipe

C. American Water Works Association (AWWA)

1. AWWA C111 - Rubber-Gasket Joints for Ductile-Iron Pressure Pipe and Fittings.

D. American Society of Mechanical Engineers (ASME)

1. ASME B31.1 - Power Piping.

E. American Welding Society (AWS)

F. Where reference is made to one of the above standards, the revision in effect at the time of bid opening shall apply.

1.05 QUALITY ASSURANCE

A. Stainless steel pipe and fittings shall be furnished by a single manufacturer who is fully experienced, reputable, qualified and regularly engaged for the last 5 years in the manufacture of the materials to be furnished. The pipe and fittings shall be designed, constructed and installed in accordance with the best practices and methods and shall comply with this Section.

1.06 SYSTEM DESCRIPTION

A. Piping shall be installed in those locations as shown on the Drawings.

B. The equipment and materials specified herein are intended to be standard types of stainless steel pipe and fittings for use in transporting wastewater.

C. Stainless steel piping for the system listed below shall be designed for the following conditions:

1. System: Pump Station Building – Above and Below Grade Piping
   a. Material: Type 316L, Schedule 40S
   b. Operating Pressure: 58 psi
   c. Test Pressure: 150 psi
   d. Temperature: 68-80°F

1.07 DELIVERY, STORAGE AND HANDLING

A. Care shall be taken in loading, transporting and unloading to prevent injury to the pipe and fittings. Pipe and fittings shall not be dropped. Pipe and fittings shall be examined before installation and no piece shall be installed which is found to be defective.

B. In handling the pipe, wide cushioned slings or other devices and methods acceptable to the Engineer shall be used. No uncushioned ropes, chairs, wedges or levers shall be used in handling the pipe, fittings and couplings.

C. If any defective pipe is discovered after it has been installed, it shall be removed and replaced with a sound pipe by the Contractor, at the Contractor's own expense. All pipe and fittings shall be thoroughly cleaned before installation and shall be kept clean until they are put into service.

PART 2 PRODUCTS

2.01 MATERIALS

A. All stainless steel pipe and fittings shall be fabricated from stainless steel sheet and conform to ASTM A778 Type 316L. Carbon content of Type 316L material shall be 0.03 percent maximum. Finish shall be No. 1 or No. 2B.

B. Pipe shall be die-formed or rolled true to dimension and round. Tolerances for length, inside and outside diameter and straightness shall conform to ASTM A530. The two edges of sheet shall be brought to line so as not to leave a shoulder on the inside of the pipe. Ends of pipe and fittings shall be perpendicular to the longitudinal axis. Longitudinal seams on pipe and fittings shall be welded by either the tungsten gas or the metallic-gas method. The interior welds shall be smooth, even and shall not have an internal bead higher than 1/16-in. All pieces shall be marked with gauge and type of stainless steel and with the initials of the inspector marked on the inside of each piece, at each end.

   1. All stainless steel piping shall be Schedule 10, at a minimum, or of sufficient thickness for a working pressure of 58 psi at 120 degrees F.

C. Fittings shall conform to ANSI B16.9.

D. Flanges for pipe 4-in and smaller shall be of the type of stainless steel as the pipeline, and shall be welded directly to the pipe end, and shall be drilled to the 125 lb ANSI B16.1 standard. Flanges for pipe larger than 4-in shall have stub ends or rolled angle rings of the type of stainless steel as the pipeline welded to the pipe end, with suitable gaskets between the mating surfaces and joined through the use of 125 lb rated back-up flanges, drilled to ANSI B16.1, and made of Type 316 stainless steel. Where the pipe stub is to pass through a sleeve during installation, a split-type back up flange shall be used. Bolts, washers, nuts and other hardware for flange bolting shall be Type 316 stainless steel.

E. Gaskets for flanged connections shall be a minimum of 1/8-in thick and shall be Hypalon®, Teflon™, BUNA-N, SBR, NBR or Viton™.

F. All stainless steel pipe and fittings shall be pickled at the point of manufacture, scrubbed and washed until all discoloration is removed in accordance with ASTM A380.

G. Pipe ends shall be prepared for couplings or other type ends where required by transport and handling limitations, where required by the support layout requirements and where noted on the Drawings. Plain end pipe may be coupled with "Pressfit"-style connectors, for pipe/tubing sizes 1-1/2-in and smaller, manufactured by the Victaulic Co. or by the use of grooved end couplings. Grooving (or built-up ends for Schedule 5s or 10s pipe) shall be of the coupling manufacturers standard type. Contractor is responsible for ensuring rigidity of joints where required. All normal pipe joints at valves, bends, etc., shall be flanged, drilling per ANSI B16.1, Class 125.

H. Shop welding of fabrications shall be done according to the procedures and by welders certified per ASME Section IX. Welds shall be by an inert gas shielding process using only extra low carbon filler metals. Welds shall have a bead height of no more than 1/16-in. Butt welds shall have 100 percent penetration to the interior or backside of the weld joint. Cross-sectional thickness of welds shall be equal or greater than that of the parent metal.

I. Where shown on the Drawings or where approved by the Engineer, harnessed flange adapter couplings (HFAC) shall be used to connect plain end pipe to equipment, fittings and valves. HFACs shall be as specified in Specification 15120.

PART 3 EXECUTION

3.01 INSTALLATION

A. All pipe and fittings shall be installed true to grade and alignment and pipe anchorage and/or restraint shall be provided where required. Manufacturer's instructions shall be strictly followed.

B. All pipe and fittings shall be protected from dirt, dust, oil, grease and other foreign matter during installation to prevent damage to pipe and to assure no foreign matter is left in the piping.

C. To assemble the joints in the field, thoroughly clean all joint surfaces and gaskets, if any, with soapy water before assembly. Bolts shall be tightened alternately, evenly to the manufacturer's specified torques. Under no condition shall extension wrenches or pipe-over-handle ratchet wrenches be used to secure greater leverage. All electrical bonding or insulation shall be installed as joints are made up.

D. Fittings, in addition to those shown on the Drawings, shall be provided if required. Due consideration shall be given to thermal expansion/contraction over a temperature range of 200 degrees F.

E. When cutting of pipe is required, the cutting shall be done by machine neatly, without damage to the pipe. Cut ends shall be smooth and at right angles to the axis of the pipe.

F. After installation, stainless steel pipe lines shall be washed clean with steam or hot water to remove any foreign material picked up during transport.

G. All connections at pump stations shall be flanged.

3.02 JOINING FLANGED JOINTS

A. Flanged joints shall be made with gasket, bolts and nut bolts stud with a nut on each end, or studs with nuts where the pipe is tapped. The number and size of bolts shall conform to the same standard requirements as the flange.

3.03 FIELD WELDING

A. Welding in the field shall be done only if approved by the Engineer. Field welds shall be made by welders certified under ASME Section IX and be equal in all respects to shop welds. After field welding has been done, all joints shall be thoroughly cleaned and buffed using deburring and finishing wheels.

3.04 FIELD PAINTING

A. Final field painting is included in Section 09902 except that for all stainless steel pipe, only bands, labels and arrows rather than full pipe painting will be required.

3.05 FIELD TESTING

A. Field Testing of the pipe is specified in Section 01445.

END OF SECTION

© 2019 CDM Smith
All Rights Reserved

THIS PAGE INTENTIONALLY LEFT BLANK

© 2019 CDM Smith
All Rights Reserved

SECTION 15072
DUCTILE IRON PIPE AND FITTINGS (ABOVE GRADE)

PART 1 GENERAL

1.01 WASTEWATER PIPE AND FITTINGS

A. Shall be as specified in the JEA Water and Wastewater Standards (January 2019 or latest), Wastewater Force Mains – Section 429.

B. Shall be as specified in the JEA Water and Wastewater Standards (January 2019 or latest), Wastewater Valves and Appurtenances – Section 430.

C. Shall be as specified in the JEA Water and Wastewater Standards (January 2019 or latest), In-Line Booster Wastewater Pumping Stations – Section 435.

END OF SECTION

© 2019 CDM Smith
All Rights Reserved

THIS PAGE INTENTIONALLY LEFT BLANK

© 2019 CDM Smith
All Rights Reserved

SECTION 15100
VALVES

PART 1 GENERAL

1.01 SCOPE OF WORK

A. Furnish all labor, materials, equipment and incidentals required and install complete and ready for operation and test all non-buried valves as shown on the Drawings and as specified herein.

B. The equipment shall include, but not be limited to, the following; however not all items specified herein may be included in this project.

1. General Requirements.
2. Valve Actuators - Manual.
3. Gate Valves.
4. Plug Valves.
5. Check Valves.
6. Ball Valves.
7. Air Release and Vacuum Relief Valves.
8. Hose End Valves.

1.02 RELATED WORK

A. Shop and Finish painting is included in Sections 09901 and 09902.

B. Instrumentation, not specified herein, is included in Division 16.

C. Valves on all HVAC and plumbing systems are included in their respective sections of Division 15.

D. Electrical work is included in Division 16.

E. Certain items similar to those specified in this Section may be specified to be furnished and installed with individual equipment or systems. In case of a conflict, those individual equipment or system requirements shall govern.

F. Pipeline appurtenances are included in Section 15120 and include the following:

1. Unions.
2. Flanged Joints.
3. Dielectric Connectors.
4. Plugs and Caps.

5. Miscellaneous Adaptors.

6. Vents and Drains.

7. Line Strainers.

8. Service Clamps.

9. Cleanouts.

10. Floor Drains.

11. Quick Connect Couplings.

12. Mechanical Sleeve Seals.

13. Flexible Connectors.

14. Expansion Joints.

15. Harnessing and Restraints.

16. Pressure Gauges.

17. Diaphragm Seals and Snubbers for Gauges.

18. Pipe Cleaning Equipment.

19. Appurtenances and Miscellaneous Items.

20. Color Coding and Labeling.

1.03 SUBMITTALS

A. Submit to Engineer, in accordance with Section 01300, materials required to establish compliance with this Section. First submittal shall be valve schedule described in Paragraph 1.09. Approval of valve schedule submittal is required prior to Contractor submitting any of equipment in this specification. Subsequent Equipment Submittals shall include at least the following:

1. Valve tag number.

2. Manufacturer and supplier.

3. Address at which equipment will be fabricated or assembled.

4. Drawings showing assembly details, materials of construction and dimensions.

5. Descriptive literature, bulletins and/or catalogs of the equipment.

6. Total weight of each item.

7. A complete bill of materials.

8. Additional submittal data, where noted with individual pieces of equipment.

9. Individual electrical control schematics and wiring diagrams for each valve operator with external interfaces, identified exactly as detailed on Electrical and Instrumentation Drawings. Standard catalogue cut sheets that show typical wiring diagrams only are not acceptable. Valve actuators shall be coordinated with electrical requirements shown on Drawings and valves as specified herein.

B. Certificates:

1. For each valve specified to be manufactured, tested and/or installed in accordance with AWWA and other standards, submit an affidavit of compliance with appropriate standards, including certified results of required tests and certification of proper installation.

C. Manufacturer's Installation and Application Data.

D. Operating and Maintenance Data.

1. Operating and maintenance instructions shall be furnished to Engineer as provided in Section 01730. Instructions shall be prepared specifically for this installation and shall include required cuts, drawings, equipment lists, descriptions and other information required to instruct operating and maintenance personnel unfamiliar with such equipment.

1.04 REFERENCE STANDARDS

A. ASTM International:

1. ASTM A48 - Standard Specification for Gray Iron Castings.

2. ASTM A126 - Standard Specification for Gray Iron Castings for Valves, Flanges and Pipe Fittings.

3. ASTM A276 - Standard Specification for Stainless Steel Bars and Shapes.

4. ASTM A436 - Standard Specification for Austenitic Gray Iron Castings.

5. ASTM A536 - Standard Specification for Ductile Iron Castings.

6. ASTM B30 - Standard Specification for Copper-Base Alloys in Ingot Form.

7. ASTM B62 - Standard Specification for Composition Bronze or Ounce Metal Castings.

B. American Water Works Association (AWWA):

1. AWWA C111 - Rubber-Gasket Joints for Ductile-Iron Pressure Pipe and Fittings.

2. AWWA C500 - Metal-Seated Gate Valves Supply Service.

3. AWWA C508 - Swing-Check Valves for Waterworks Service, 2-in (50mm through 24-in (600mm) NPS.

4. AWWA C509 - Resilient-Seated Gate Valves for Water Supply Service.

5. AWWA C511 - Reduced-Pressure Principle Backflow-Prevention Assembly.

6. AWWA C550 - Protective Epoxy Interior Coatings for Valves and Hydrants.

7. AWWA C800 - Underground Service Line Valves and Fittings.

C. American National Standards Institute (ANSI):

1. ANSI B1.20.1 - Specifications, Dimensions, Gauging for Taper and Straight Pipe Threads (except dry seals).

2. ANSI B16.1 - Cast Iron Pipe Flanges and Flanged Fittings.

3. ANSI B16.10 - Face-to-Face and End-to-End Dimensions of Valves.

D. American Iron and Steel Institute (AISI).

E. Manufacturer's Standardization Society of the Valve and Fittings Industry (MSS):

1. MSS-SP-61 - Pressure Testing of Steel Valves.

2. MSS-SP-70 - Cast Iron Gate Valves, Flanged and Threaded Ends.

3. MSS-SP-71 - Cast Iron Swing Check Valves, Flanges and Threaded Ends.

4. MSS-SP-72 - Ball Valves with Flanged or Butt-Welding Ends for General Services.

5. MSS-SP-78 - Cast Iron Plug Valves, Flanged and Threaded Ends.

6. MSS-SP-82 - Valve Pressure Testing Methods.

7. MSS-SP-98 - Protective Coatings for the Interior of Valves, Hydrants and Fittings.

F. National Electrical Manufacturers Association (NEMA).

G. Underwriters Laboratories (UL).

H. Factory Mutual (FM).

I. Where reference is made to one of the above standards, the revision in effect at the time of bid opening shall apply.

1.05 QUALITY ASSURANCE

A. Qualifications:

1. Valves and appurtenances shall be products of well-established firms who are fully experienced, minimum ten years, reputable and qualified in manufacture of particular equipment to be furnished.

2. Equipment shall be designed, constructed and installed in accordance with best practices and methods and shall comply with this Section as applicable.

3. Units of the same type shall be the product of one manufacturer.

B. Certifications:

1. Manufacturers shall furnish an affidavit of compliance with Standards referred to herein as specified in Paragraph 1.03C above. Refer to Part 3 for testing required for certain items in addition to that required by referenced standards.

C. Inspection of units may also be made by Engineer or other representative of Owner after delivery. Equipment shall be subject to rejection at any time due to failure to meet any of specified requirements, even though submittal data may have been accepted previously. Equipment rejected after delivery shall be marked for identification and shall be removed from job site at once.

1.06 SYSTEM DESCRIPTION

A. Equipment and materials specified herein are intended to be standard for use in controlling flow of water, wastewater, and air as noted on Drawings.

B. Valves, appurtenances and miscellaneous items shall be installed as shown on Drawings and as specified, so as to form complete workable systems.

1.07 DELIVERY, STORAGE AND HANDLING

A. Reference is made to Section 01600 for additional information.

B. Packing and Shipping:

1. Care shall be taken in loading, transporting and unloading to prevent injury to the valves, appurtenances, or coatings. Equipment shall not be dropped. Valves and appurtenances shall be examined before installation and no piece shall be installed which is found to be defective. Damage to the coatings shall be repaired as acceptable to Engineer.

2. Prior to shipping, ends of valves shall be acceptably covered to prevent entry of foreign material. Covers shall remain in place until after installation and connecting piping is completed.
   a. Valves 3-in and larger shall be shipped and stored on site until time of use with wood or plywood covers on each valve end.
   b. Valves smaller than 3-in shall be shipped and stored as above except that heavy cardboard covers may be used on the openings.
   c. Rising stems and exposed stem valves shall be coated with a protective oil film which shall be maintained until the valve is installed and put into use.
   d. Corrosion in evidence at the time of acceptance by the Owner shall be removed, or the valve shall be removed and replaced.

C. Storage and Protection:

1. Special care shall be taken to prevent plastic and similar brittle items from being directly exposed to the sun, or exposed to extremes in temperature, to prevent deformation. See the individual piping sections and manufacturer's information for further requirements.

1.08 MAINTENANCE

A. Special tools and the manufacturer's standard spare parts, if required for normal operation and maintenance, shall be supplied with the equipment in accordance with Section 01730 and where noted, as specified herein. Tools shall be packaged in a steel case, clearly and indelibly marked on the exterior to indicate equipment for which tools are intended.

B. Provide one operations and maintenance manual for each type of valve and operator supplied under this specification in accordance with Section 01730.

C. Included within operations and maintenance manuals, provide a list of all spare and replacement parts with individual prices and location where they are available.

1.09 VALVE DESIGNATIONS AND SCHEDULE

A. Valves shall be identified by a unique valve tag as identified in valve schedule prepared by Contractor. Specific type of valve to be used will be identified by symbol and/or call out on Drawings. Contractor shall identify each valve by its assigned tag number on shop drawings and equipment submittals.

B. Contractor shall refer to the P&IDs and mechanical plans for type of each valve called out by abbreviation or drawing symbol. Prior to first valve submittal, Contractor shall submit a detailed valve schedule listing process valves to be furnished along with Contract Drawing P&IDs edited electronically which shall include valve tag numbers prepared by Contractor identifying each valve. This valve schedule shall NOT include valves furnished under Division 2 or in Plumbing and HVAC sections of Division 15. Valve schedule shall include: valve tag number; valve designation; valve size; end connections and operator type. Valve tag convention shall be four digits long, numbering shall be linked to the P&ID Sheet on which it is shown. Identical valves in same position in parallel processes (EX. Pump inlet/outlet isolation valves where there are three parallel pumps of same type) shall have same tag number followed by a hyphen and quantifier -1, 2, 3 etc. Where electric, hydraulic or pneumatic actuators are supplied their type shall be so noted with an E, H or P. Modulating duty actuators shall be noted with an M following the actuator type notation. An excerpt of an EXAMPLE schedule is as follows:

Valve Tag.	Designation	Size	Ends	Operator	Notes
1000-1	BFV1	8-in	Flanged	Gear/Handwheel	Extra description as necessary
1000-2	BFV1	8-in	Flanged	Gear/Handwheel	
1005	PV1	6-in	Flanged	EM	

PART 2 PRODUCTS

2.01 MATERIALS AND EQUIPMENT - GENERAL

A. Reference is made to Division 1 for additional requirements, including nameplates, provisions for temporary pressure gauges, protection against electrolysis and anchor bolts.

B. Use of a manufacturer's name and/or model or catalog number is for purpose of establishing standard of quality and general configuration desired.

C. Valves and appurtenances shall be of size shown on the Drawings or as noted and as far as possible equipment of same type shall be identical and from one manufacturer.

D. Valves and appurtenances shall have name of maker, nominal size, flow directional arrows, working pressure for which they are designed and standard referenced, cast in raised letters or via riveted stainless steel nameplate upon some appropriate part of the body.

E. Unless otherwise noted, items shall have a minimum working pressure of 150 psi or be of same working pressure as pipe they connect to, whichever is higher and suitable for pressures noted where they are installed.

F. Joints, size and material - unless otherwise noted or required by Engineer:

1. Except where noted, joints referred to herein shall be of same type, nominal diameter, material and with a minimum rating equal to pipe or fittings they are connected to.

2. Valves and appurtenances shall be of same nominal diameter as pipe or fittings they are connected to.

3. Valves exposed to view, or in vaults:
   a. 3-in and smaller - threaded ends- unless noted otherwise herein or on Drawings.
   b. 4-in and larger - flanged ends.

G. Provide special adaptors as required to ensure compatibility between valves, appurtenances, and adjacent pipe.

H. No alternative materials will be considered for approval unless complete documentation is provided regarding their satisfactory long-term use in similar conditions; in addition, the consideration of any substitution will be considered only if superiority of proposed materials is the intent of substitution, and only if sufficient evidence is provided to document that superiority.

2.02 VALVE ACTUATORS - GENERAL/ MANUAL

A. Geared actuators shall be suitable for all weather service, with mechanical shaft seals, shall be permanently greased, or shall have provisions for greasing. Actuators for submerged duty shall be so rated, with certification by manufacturer for submerged service.

B. Valve manufacturer shall supply, mount, and test all actuators on valves at factory. Valves and their individual actuators shall be shipped as a unit.

C. Unless otherwise noted on Drawings, valves shall be manually actuated; non-buried valves shall have an operating wheel, handle or lever mounted on operator; those with operating nuts shall have a non-rising stem with an AWWA 2-in nut; At least two tee handles shall be provided for operating nuts. Unless otherwise noted, operation for valves shall be CCW open.

D. Manually actuated butterfly valves 6 inches and smaller for fluid service shall have a 10 position, spring retained ratcheting handle. Handle shall be fusion bonded epoxy coated steel or cast iron, hardware, spring and ratcheting plate shall be Type 316 stainless steel. Manually actuated butterfly valves for air service 6 inches and smaller shall have a memory stop handle with infinite throttling position capability. Memory stop plate and hardware shall be Type 316 stainless steel.

E. Except as otherwise shown on Drawings or specified herein, valves 3-in diameter or larger, with valve hand wheel center line located 7-ft or more above operating floor, shall be provided with chain wheel operators complete with chain guides and hot dipped galvanized steel chain, which loop within 4-ft of operating floor. These requirements shall supersede positioning lever actuator requirements of manual butterfly valves 6 inch and smaller.

F. Actuators shall be capable of moving valve from full open to full close position and in reverse and holding valve at any position part way between full open or closed.

G. Each operating device shall have cast on it the word "OPEN" and an arrow indicating direction of operation.

H. Floor boxes for operating nuts recessed in concrete shall be standard cast iron type, cast-in-place, with fastening top, and Type 316 stainless steel hardware.

I. Stem guides shall be of the adjustable wall bracket type, bronze bushed, with maximum spacing of 10-ft as manufactured by Clow; Rodney Hunt or equal. Extended operating nuts and/or stems shall have universal joints and pin couplings, if longer than 10-ft and a rating of at least five times the maximum operating torque. Stem adaptors shall be provided.

J. Where required by installation, or as specified, provide the following: extended stem; floor stand and handwheel; position indicator and etched or cast arrow to show direction of rotation to open the valve; resilient, moisture-resistant seal around stem penetration of slab.

K. Gear Actuators:

1. Unless otherwise noted, gear actuators shall be provided for the following: plug and ball valves larger than 3-in diameter; butterfly valves larger than 6-inch diameter; where specified and/or indicated on Drawings; where manual operator effort is greater than 40 lbs rim pull.

2. Actuators shall be capable of being removed from valve without dismantling the valve or removing valve from the line.

3. Gear actuators for quarter turn valves shall be of worm or helical worm gear type with output shaft perpendicular to valve shaft, having a removable hand wheel mounted on output shaft. Where shown on Drawings, a two inch cast iron operating nut shall be provided. Actuators shall conform to AWWA C504 except where more stringent requirements are provided hereinafter. Gearing shall be machine cut steel designed for smooth operation. Bearings shall be permanently lubricated, with bronze bearing bushings provided to take thrusts and mechanical shaft seals to contain lubricants. Housings shall be sealed to exclude moisture and dirt, allow reduction mechanisms to operate in lubricant and be constructed of cast iron, ASTM A 126, Grade B, or of ductile iron, ASTM A 536. Gear housing bodies for thermoplastic valves may be cast aluminum or fabricated steel to reduce weight. Gear actuators shall indicate valve position and have adjustable stops.

4. Where indicated on Drawings, gear actuators for butterfly valves shall be of travelling nut type with output shaft perpendicular to valve shaft, having a removable hand wheel mounted on output shaft. Unless noted they shall conform to AWWA C504. Stem shaft shall be machine cut alloy steel, nut and cross head shall be bronze, lever shall be ductile iron. Nut Actuators for valves 24-in and smaller shall be slotted lever design, actuators for valves greater than 24 inch shall be link and lever design. Mechanism shall be lubricated with water resistant extreme pressure NLGI No. 2 grease. Bevel gear reduction box shall be

mounted on the actuator when required to meet specified manual operating effort requirements Gear actuators shall have mechanical, external indication of valve position and have adjustable threaded stops secured to the stem with spring pins. Stop shall be capable of withstanding 450-fts-lb of input torque. Stop adjustment requiring shims are not acceptable.

5. Manual Input torque to produce required valve operating torque for worm and travelling nut gear operators shall not exceed 80 ft-lbs. In addition, hand wheel rim pull shall not exceed 20 lbs for valve sizes up to 12 inches, 40 lbs for valve size between 14 and 20 inches, 60 lbs for valve size 24 and greater. Minimum hand wheel size shall be 8 inches for up to 12-inch valve size, 12 inches for up to 16-inch valve size, 18 inches for up to 20-inch size.

6. Gear actuators for multi turn valves shall be of bevel or spiral bevel type with output shaft perpendicular to valve shaft, having a removable hand wheel mounted on output shaft. Gearing shall be machine cut steel designed for smooth operation. Bearings shall be permanently grease lubricated, with dual anti-friction ball bearings on output shaft and mechanical shaft seals to contain lubricants. Output flange of primary gear reducer shall be designed to meet an appropriate MSS or ISO standard to allow mounting to secondary gear reducer. Ring gear shall ride on ball bearings. Stem nut shall be bronze alloy, shouldered, and ride on needle bearings. Housing components shall be O-ring sealed to exclude moisture and dirt, constructed of cast iron, ASTM A 126, Grade B, or of ductile iron, ASTM A 536. Gear housing bodies for thermoplastic valves may be cast aluminum or fabricated steel to reduce weight. Manual operator input effort to the hand wheel shall be a maximum of 30 lbs for operating the valve from full open to full close, under any conditions. Maximum hand wheel size shall be 24-in diameter.

L. Additional valve actuator requirements are included with the individual valve types and as noted in Paragraph 1.02 above.

M. Position indication and direction of opening arrows shall be embossed, stamped, engraved, etched, or raised castings. Decals or painted indications shall not be allowed.

N. Unless otherwise noted, valves larger than 3-in nominal diameter shall be provided with position indicators at the point of operation.

2.03 GATE VALVES

A. Gate valves shall be as specified in JEA's Water and Wastewater Standards – Section 430 January 1, 2019 or most recent.

2.04 PLUG VALVES

A. Plug valves shall be as specified in JEA's Water and Wastewater Standards – Section 430 January 1, 2019 or most recent.

2.05 RUBBER FLAPPER SWING CHECK VALVES

A. The Rubber Flapper Swing Check Valve shall have a heavily constructed ductile iron body and cover. The body shall be long pattern design (not wafer) with integrally cast-on end flanges. The flapper shall be Buna-N having an "O" ring seating edge and be internally reinforced with steel.

B. Flapper to be captured between the body and the body cover in a manner to permit the flapper to flex from closed to full open position during flow through the valve. Flapper shall be easily removed without need to remove valve from line. Check Valves to have full pipe size flow area. Seating surface to be on a 45 degree angle requiring the flapper to travel only 35 degrees from closed to full open position, for minimum head loss and non-slam closure.

C. Buna-N Flapper (hi-strength coated fabric – coated both sides with 70 Duro) which creates an elastic spring effect, molded internally, to assist the flapper to close against a slight head to prevent slamming.

D. Valve designed for 250 psi working pressure for raw water.

E. A top mounted valve position limit switch shall be provided to indicate when the valve is fully closed and open. The indicator shall have continuous contact with the disc under all operating conditions to assure accurate disc position indication. The limit switch shall be Honeywell model no. 914CE20-3. The switch shall be rated NEMA 4X with an SPDT relay (120VAC@5A) for remote indication.

F. The valve shall come with a hold open device for backflushing. The hold open device shall be operable without removing the check valve or taking the pump out of service.

G. The Valve Manufacturer shall have been regularly engaged in the design and manufacture of Rubber Flapper Swing Check Valves for at least five years and shall submit a list of at least five separate installations in service for a minimum of five years for engineer approval prior to release to manufacture.

H. Materials of construction shall be certified in writing to conform to ASTM specifications as follows:

Body & Cover	ASTM A536 Grade 65-45-12 Ductile Iron
Rubber Flapper	Buna-N

I. Valve to be APCO Series 100 Rubber Flapper Swing Check Valve, as manufactured by Dezurik; Val-Matic 500 Series or approved equal.

2.06 BALL VALVES

A. Ball valves shall be as specified in JEA's Water and Wastewater Standards – Section 430 January 1, 2019 or most recent.

2.07 AIR VALVES AND AIR RELEASE VALVES

A. Air Release and Air/Vacuum valves shall be as specified in JEA's Water and Wastewater Standards – Section 430 January 1, 2019 or most recent.

1. Combination air valves for the 18-inch pump discharge piping on the diesel engine driven emergency backup pumps shall be 3-inch, Model D-023NS by A.R.I. USA Inc. or equivalent by JEA approved equal.

2. Air release valves for discharge piping of the in-line booster pumps shall be 2-inch, Model S-020 by A.R.I. USA Inc. or equivalent by JEA approved equal.

2.08 SURFACE PREPARATION AND SHOP COATINGS

A. Notwithstanding any of these specified requirements, coatings and lubricants in contact with potable water shall be certified as acceptable for use with that fluid.

B. If not specified herein, coatings shall comply with the requirements of Section 09901 and 09902. In case of a conflict, requirements of this Section govern.

C. If manufacturer's requirement is not to require finished coating on interior surfaces, then manufacturer shall so state and no interior finish coating will be required, if acceptable to Engineer.

D. Exterior surface of various parts of valves, operators, floor-stands and miscellaneous piping shall be thoroughly cleaned of all scale, dirt, grease or other foreign matter and thereafter one shop coat of an approved rust-inhibitive primer such as Inertol Primer No. 621 shall be applied in accordance with instructions of paint manufacturer or other primer compatible with finish coat provided.

E. Unless otherwise noted, interior ferrous surfaces of valves shall be given a shop finish of an asphalt varnish conforming to AWWA C509, (except mounting faces/surfaces) or epoxy conforming to AWWA C550 with a minimum thickness of 6 mils.

F. Ferrous surfaces obviously not to be painted shall be given a shop coat of grease or other suitable rust-resistant coating. Mounting surfaces shall be especially coated with a rust preventative.

G. Special care shall be taken to protect uncoated items and plastic items, especially from environmental damage.

2.09 FACTORY INSPECTION AND TESTING

A. Factory inspection, testing and correction of deficiencies shall be done in accordance with the referenced standards and as noted herein.

B. See Division 1 for additional requirements. Also refer to Part 1, especially for required submission of test data to Engineer.

C. In addition to tests required by referenced standards, the following shall also be factory tested:

1. Pressure regulating valves shall be factory tested at specified pressures and flows.

2. Butterfly valves shall be factory tested to demonstrate drop tight closure at specified conditions.

3. All types of air and vacuum valves.

PART 3 EXECUTION

3.01 INSTALLATION - GENERAL

A. Valves and appurtenances shall be installed per manufacturer's instructions in locations shown, true to alignment and rigidly supported. Damage to above items shall be repaired to satisfaction of Engineer before they are installed.

B. Install brackets, extension rods, guides, various types of operators and appurtenances as shown on Drawings, or otherwise required. Before setting these items, check Drawings and figures which have a direct bearing on their location. Contractor shall be responsible for proper location of valves and appurtenances during construction of the work.

C. Materials shall be carefully inspected for defects in construction and materials. Debris and foreign material shall be cleaned out of openings, etc. Valve flange covers shall remain in place until connected piping is in place. Operating mechanisms shall be operated to check their proper functioning and nuts and bolts checked for tightness. Valves and other equipment which do not operate easily, or are otherwise defective, shall be repaired or replaced at no additional cost to Owner.

D. Where installation is covered by a referenced standard, installation shall be in accordance with that standard, except as herein modified, and Contractor shall certify such. Also note additional requirements in other parts of this Section.

E. Unless otherwise noted, joints for valves and appurtenances shall be made up utilizing same procedures as specified under applicable type connecting pipe joint and valves and other items shall be installed in proper position as recommended by manufacturer. Contractor shall be responsible for verifying manufacturers' torqueing requirements for all valves.

3.02 INSTALLATION OF MANUAL OPERATIONAL DEVICES

A. Unless otherwise noted, operational devices shall be installed with units of factory, as shown on Drawings or as acceptable to Engineer to allow accessibility to operate and maintain item and to prevent interference with other piping, valves, and appurtenances.

B. For manually operated valves 3-in in diameter and smaller, valve operators and indicators shall be rotated to display toward normal operation locations.

C. Floor boxes, valve boxes, extension stems and low floor stands shall be installed vertically centered over operating nut, with couplings as required and elevation of box top shall be adjusted to conform to elevation of finished floor surface or grade at completion of Contract. Boxes and stem guides shall be adequately supported during concrete placement to maintain vertical alignment.

3.03 INSPECTION, TESTING AND CORRECTION OF DEFICIENCIES

A. See also Division 1. Take care not to over pressure valves or appurtenances during pipe testing. If unit proves to be defective, it shall be replaced or repaired to satisfaction of Engineer.

B. Functional Test: Prior to plant startup, items shall be inspected for proper alignment, quiet operation, proper connection and satisfactory performance. After installation, manual valves shall be opened and closed in presence of Engineer to show valve operates smoothly from full open to

full close and without leakage. Valves equipped with electric, pneumatic or hydraulic actuators shall by cycled five times from full open to full closed in presence of Engineer without vibration, jamming, leakage, or overheating. Pressure control and pressure relief valves shall be operated in presence of Engineer to show they perform their specified function at some time prior to placing piping system in operation and as agreed during construction coordination meetings

C. Various pipe lines in which valves and appurtenances are to be installed are specified to be field tested. During these tests any defective valve or appurtenance shall be adjusted, removed, and replaced, or otherwise made acceptable to Engineer.

D. Various regulating valves, strainers, or other appurtenances shall be tested to demonstrate their conformance with specified operational capabilities and deficiencies shall be corrected or device replaced or otherwise made acceptable to Engineer.

3.04 CLEANING

A. Items including valve interiors shall be inspected before line closure, for presence of debris. At option of Engineer, internal inspection of valve and appurtenances may be required any time that likelihood of debris is a possibility. Pipes and valves shall be cleaned prior to installation, testing, disinfection and final acceptance.

3.05 DISINFECTION

A. Disinfection of valves and appurtenances on potable water lines and where otherwise noted, shall be as specified in Section 15050.

END OF SECTION

© 2019 CDM Smith
All Rights Reserved

THIS PAGE INTENTIONALLY LEFT BLANK

© 2019 CDM Smith
All Rights Reserved

SECTION 15120
PIPING SPECIALTIES

PART 1 GENERAL

1.01 SCOPE OF WORK

A. Furnish all labor, materials, equipment and incidentals required and install complete test, and make ready for operation all piping specialties required by the work of this Contract. Specific piping materials, systems and related installation and testing requirements shall be coordinated with the related sections in Divisions 2, 13 and 15. The items shall include the following:

1. Unions.
2. Flanged Joints.
3. Dielectric Connectors.
4. Plugs and Caps.
5. Miscellaneous Adaptors.
6. Vents and Drains.
7. Service Clamps.
8. Quick Connect Couplings.
9. Mechanical Sleeve Seals.
10. Flexible Connectors:
11. Expansion Joints:
12. Harnessing and Restraints.
13. Pressure Gauges.
14. Diaphragm Seals for Gauges.
15. Appurtenances and Miscellaneous Items.
16. Color Coding and Labeling.

1.02 RELATED WORK

A. Piping penetration are included in Section 01180.

B. Pipeline color coding and labeling is included in Section 09902.

C. Piping materials and systems are included in other Sections of Division 15.

D. Specialties and apparatus furnished with equipment and systems are included in individual Sections in Divisions 11 and 14.

E. Valves are included in Section 15100.

F. Pipe supports are included in Section 15140.

1.03 SUBMITTALS

A. Submit, in accordance with Section 01300, general submittals for piping, piping systems and pipeline appurtenances are listed below. It is not intended that all submittals listed below be provided for all piping materials and systems. Refer to individual System or Piping Sections for specific submittals.

B. Shop Drawings and Product Data:

1. Piping layouts with specialties.

2. Location and type of backup block or device to prevent joint separation.

3. Large scale details of fabricated fittings, if applicable.

4. Catalog cuts of specialties, joints, couplings, harnesses, expansion joints, gaskets, fasteners and other accessories.

5. Catalog cuts of all pipeline appurtenances specified herein.

6. Brochures and technical data on coatings and linings and proposed method for application and repair.

C. Design Data.

D. Certificates:

1. Copies of certification for all welders performing work in accordance with ANSI B31.1.

E. Manufacturer's Installation (or application) instructions.

F. Statement of Qualifications.

G. Operation and Maintenance Data in accordance with Section 01730.

H. Warranties.

1.04 REFERENCE STANDARDS

A. ASTM International (ASTM):

1. ASTM A36 - Standard Specification for Carbon Structural Steel.

2. ASTM A126 - Standard Specification for Gray Iron Casting for Valves, Flanges and Pipe Fittings.

3. ASTM A183 - Standard Specification for Carbon Steel Track Bolts and Nuts.

4. ASTM A278 - Standard Specification for Gray Iron Castings for Pressure-Containing Parts for Temperatures up to 650 Degrees F.

5. ASTM A307 - Standard Specification for Carbon Steel Bolts and Studs, 60,000 psi Tensile Strength.

6. ASTM A325 - Standard Specification for Strength Bolts, Steel, Heat Treated, 120/105 ksi Minimum Tensile Strength.

7. ASTM A536 - Standard Specification for Ductile Iron Castings.

8. ASTM A575 - Standard Specification for Steel Bars, Carbon, Merchant Quality, M-Grades.

9. ASTM B62 - Standard Specification for Composition Bronze or Ounce Metal Castings.

B. American National Standards Institute (ANSI):

1. ANSI A13.1 - Scheme for the Identification of Piping Systems.

2. ANSI B1.1 - Unified Inch Screw Threads (UN and UNR Thread Form).

3. ANSI B18.2 - Square and Hex Bolts and Screws Inch Series Including Hex Cap Screws and Lag Screws.

4. ANSI B31 - Code for Pressure Piping.

C. American Society of Mechanical Engineers (ASME):

1. ASME B2.1 - Specifications, Dimensions, Gauging for Taper and Straight Pipe Threads (except dry seals).

2. ASME B16.1 - Cast Iron Pipe Flanges and Flanged Fittings.

3. ASME B16.5 - Pipe Flanges and Flange Fittings.

D. American Welding Society (AWS):

1. AWS B3.0 - Welding Procedure and Performance Qualifications.

E. American Water Works Association (AWWA):

1. AWWA C110 - Ductile-Iron and Gray-Iron Fittings, 3-in Through 48-in (75mm Through 1200mm), for Water and Other Liquids.

2. AWWA C111 - Rubber-Gasket Joints for Ductile-Iron Pressure Pipe and Fittings.

3. AWWA C219 - Bolted Sleeve-Type Couplings for Plain-End Pipe.

4. AWWA C606 - Grooved and Shouldered Joints.

F. Underwriters Laboratories (UL).

G. Factory Mutual (FM).

H. Where reference is made to one of the above standards, the revision in effect at the time of bid opening shall apply.

1.05 QUALITY ASSURANCE

A. Materials shall be new and unused.

B. Install piping to meet requirements of local codes.

C. Provide manufacturer's certification that materials meet or exceed minimum requirements as specified.

D. Coordinate dimensions and drilling of flanges with flanges for valves, pumps and other equipment to be installed in piping systems. Bolt holes in flanges to straddle vertical centerline.

E. Reject materials contaminated with gasoline, lubricating oil, liquid or gaseous fuel, aromatic compounds, paint solvent, paint thinner and acid solder.

F. Pipe-joint compound, for pipe carrying flammable or toxic gas, must bear approval of UL or FM.

G. Unless otherwise specified, pressures referred to in all Piping Sections are expressed in pounds per square inch, gauge above atmospheric pressure, psig and all temperature are expressed in degrees Fahrenheit (F).

1.06 DELIVERY, STORAGE AND HANDLING

A. During loading, transportation and unloading, take care to prevent damage to pipes and coating. Carefully load and unload each pipe under control at all times. Place skids or blocks under each pipe in the shop and securely wedge pipe during transportation to ensure no injury to pipe and lining. Cover or cap all pipe ends while pipe is in storage, until it is made a part of the work.

PART 2 PRODUCTS

2.01 MATERIALS AND EQUIPMENT

A. Specific piping materials and appurtenances are specified in the respective Piping or System Sections. The use of a manufacturer's name and/or model number is for the purpose of establishing the standard of quality and general configuration desired.

B. Equipment shall be of the size shown on the Drawings or as noted and as far as possible equipment of the same type shall be identical and from one manufacturer.

C. Equipment shall have the name of the maker, nominal size, flow directional arrows (if applicable), working pressure for which they are designed and standard referenced specifications cast in raised letters or indelibly marked upon some appropriate part of the body.

D. Unless otherwise noted, items shall have a minimum working pressure of 150 psi or be of the same working pressure as the pipe they connect to, whichever is higher and suitable for the pressures noted where they are installed.

2.02 UNIONS

A. Unions shall be PVC unions for joining PVC pipe.

2.03 FLANGED JOINTS

A. Flanged Joints bolts and nuts shall be Type 316 stainless steel with the bolt number and size same as flange standard; studs shall be same quality as machine bolts. Gasket shall be 1/8-in thick rubber gaskets with cloth insertions; rust-resistant coatings.

2.04 DIELECTRIC CONNECTORS

A. Dielectric pipe fittings/insulators and unions shall be used to prevent galvanic action wherever valves or piping of dissimilar metals connect.

B. Dielectric unions shall be used for 2-in and smaller connections. Steel union nuts shall meet ASTM A575 requirements. The steel or ductile iron connection end shall have a steel body and shall have accurately machined taper tapped pipe threads in accordance with ASME B2.1. The copper connection end shall be a copper solder joint that meets requirements of ASTM B88. Dielectric unions shall be rated for at least 250 psi at 210 degrees F.

C. Dielectric flange unions shall be used for connections 2-1/2-in and larger. Cast iron flanges shall meet ASTM A126; the copper solder end shall meet ASTM B62 and the pipe thread shall meet ASME B2.1. Dielectric flange unions shall be rated for at least 175 psi at 210 degrees F.

D. Dielectric unions and flange unions shall be as manufactured by Epco Inc., Cleveland, OH or equal.

E. Flange insulating kits shall be as acceptable to the Engineer, as manufactured by PSI or equal.

2.05 PLUGS AND CAPS

A. Provide standard plug or cap as required for testing; plugs, caps suitable for permanent service.

B. Plug or cap or otherwise cover all piping work in progress.

2.06 MISCELLANEOUS ADAPTORS

A. Between different types of pipe and/or fittings special adapters may be required to provide proper connection. Some of these may be indicated on the Drawings or specified with individual types of pipe or equipment. However, it is the Contractor's responsibility to ensure proper connection between various types of pipe, to structures and between pipe and valves,

gates, fittings and other appurtenances. Provide all adapters as required, whether specifically noted or not.

B. As required, these adapters shall be suitable for direct bury, with proper dielectric insulation and as a minimum, if metallic (not stainless steel or galvanized), with two coats of Coal Tar Epoxy.

2.07 SERVICE CLAMPS

A. Service clamps for outlet sizes up to 2-in shall have malleable or ductile iron bodies which extend at least 160 degrees around the circumference of the pipe and shall have neoprene gaskets cemented to the saddle body. Bodies shall be tapped for IPS. Clamps shall be of the double strap design. Service clamps shall be Style 91 by Dresser Industries, Inc.; Smith Blair; Mueller or equal.

A. Service clamps for outlet sizes 4-in through 12-in where the outlet size is not greater than half the size of the main pipe shall have ductile iron bodies and a neoprene circular cross section O-ring gasket confined within the body. Outlet shall be AWWA C110 flange or AWWA C111 mechanical joint as required for the application. Straps shall be alloy steel, minimum 1/4-in by 1-1/2-in in cross section and fabricated with 3/4-in threaded ends. Service clamps shall be Fig. A-10920 or A-30920 by American Cast Iron Pipe Company or equal.

2.08 QUICK CONNECT COUPLINGS

A. Couplings shall be of the cam and groove type consisting of a male adapter. Male adapters shall be designed to receive a female coupler without requiring threading, bolting, or tools. Connections shall remain tight and leak-proof under pressures up to 100 psig. Each adapter shall be furnished with a dust cap complete with a 18-in long security chain of corrosion resistant material. Couplings shall be by Civacon, a Division of Dover Corporation; Ever-tite or equal.

B. Adapters shall be furnished in accordance with the Drawings, or as required by the installation.

C. Coordinate final coupling size with Owner.

2.09 FLEXIBLE CONNECTORS

A. Sleeve Couplings:

1. Provide plain end type ends to be joined by sleeve couplings as stipulated in AWWA C219.
   a. Join welds on ends by couplings without pipe stops. Grind flush to permit slipping coupling in at least one direction to clear pipe joint.
   b. Outside diameter and out-of-round tolerances shall be within limits specified by coupling manufacturer.
   c. Provide lugs in accordance with ASTM A36.
   d. Provide hardened steel washers in accordance with ASTM A325.
   e. Plastic plugs shall be fitted in coupling to protect bolt holes.
   f. Nuts and bolts:

1) Provide bolts and bolt-studs in accordance with ASTM A307 and ANSI B1.1 with hexagonal or square heads, coarse thread fit, threaded full length with ends chamfered or rounded.
2) Project ends 1/4-in beyond surface of nuts.
3) Hexagonal nuts with dimensions in accordance with ANSI B18.2 and coarse threads in accordance with ANSI B1.1.

2. Middle ring of each mechanical coupling shall have a thickness at least equal to that specified for size of pipe on which coupling is to be used and shall not be less than 10-in long for pipe 30-in and larger and not less than 7-in long for pipe under 30-in in diameter.
   a. Omit pipe stop from inner surface of middle rings of couplings whenever necessary to permit removal of valves, flowmeters and other installed equipment.
   b. Provide pipe stops in other couplings.

3. Clean and shop prime with manufacturer's standard rust inhibitive primer.

4. Provide gaskets of a composition suitable for exposure to the fluid service.

5. Where shown on the Drawings, anchor sleeve-coupled joints with harness bolts. Weld harness lugs to steel pipe.
   a. Joint harness bolts shall be of sufficient length, with harness lugs placed so that coupling can be slipped at least in one direction to clear joint. Provide harnesses of sufficient number and strength to withstand test pressure as recommended in AWWA M-11.
   b. Each harness shall have a minimum of two 5/8-in diameter bolts.

6. Unless otherwise specified with the individual type of pipe, sleeve couplings (mechanical couplings) shall be Victaulic Depend-O-Lok E x E (unrestrained) or F x F (self-restrained); ITT (formerly Smith Blair) Style 411; Dresser Style 38, similar models by Baker or equal, with the pipe stop removed.

7. Similar insulation type couplings shall be provided at the face of buildings, between different type metals or where otherwise noted.

B. Harnessed Flanged Adaptor Coupling (HFAC)

1. Provide HFACs meeting the requirements of AWWA C.219 as applicable and with tie rods. Provide dismantling joints as shown on the Drawings and called out as HFAC. All connecting hardware shall be type 316 stainless steel. The spigots and flange adapters shall be ductile iron or steel meeting ASTM A283 Grade C, and shall be provided with a shop-coat primer compatible with the field applied coating as specified in Specification 09902. The HFAC shall be a complete assembly consisting of a spigot piece, flange adapter, tie rods and gaskets. The tie rod restraint system shall be capable of withstanding the full pressure thrust that the pipe system can develop at no more than 50% of the yield strength of the tie rod material. The design pressure rating of the HFACs shall be a minimum of 150 psig. HFACs shall be type DJ 400 Dismantling Joints by Romac Industries, Dismantling Joints by Viking Johnson, Style 131 Dismantling Joints by Dresser Industries, or equal.

2.10 HARNESSING AND RESTRAINT

A. All below grade piping shall be restrained unless otherwise noted.

B. Harnessing and restrained joints shall be as specified in JEA Water and Wastewater Standards (January 2019 or latest Edition) – Section 429.

2.11 PRESSURE GAUGES

A. Bosses, connections, or nipples for gauges shall be provided as acceptable to the Engineer. Unbossed tappings shall not be acceptable. Where gauge tappings are not available in the suction or discharge nozzle, the necessary tapping in the adjacent piping shall be made.

B. Gauges shall be furnished as part of a complete factory assembly, including gauge, pressure sensor, liquid fill, ball isolation valve and threaded stainless steel connecting piping.

C. Unless otherwise noted, gauge rating shall be from 0 to at least 2.5 percent higher than the rating of the pipe it is connected to.

D. For Liquid Service:

1. Pressure gauges shall have a 300 series stainless steel case and shall be 4-1/2-in nominal diameter with a full-sized Type 316 stainless steel Bourdon tube and a 300 series stainless steel movement. The gauges shall be liquid filled with glycerin and shall be provided with a filler/breather cap. The socket shall be 1/4-in NPT Type 316 stainless steel with a bottom connection and the dial shall be a white background with black markings. Gauges shall be ANSI Grade A plus or minus one percent of scale and shall have a blow-out back design.

2. Gauges for the above services shall be as manufactured by U.S. Gauge; Ashcroft; Trerice or equal.

2.12 COLOR CODING AND LABELING

A. General:

1. Provide a complete color coding system consisting of preprinted labels and banding by Brady; Seton or equal. Field painting shall be specified in Section 09902. Coordinate piping color selection with the Owner.

2. Piping system identification shall comply with the requirements of ANSI A13.1.

3. Colors listed are general. Actual colors will be selected based on a comparison to the existing plant color codes, except as otherwise indicated; samples shall be furnished for all pipe paint colors; with chips from existing piping where new service lines are connecting.

4. Banding:
   a. Unless special spacing is listed in schedule, apply banding to pipe at connections to equipment, valves, branch fittings, at wall, floor, or ceiling boundaries and at intervals not greater than 36-ft.

5. Labels and Directional Arrows:

a. Apply labels with directional arrows at connections to equipment, valves, branch fittings, at least one wall, floor, or ceiling boundary within a room and at intervals not greater than 36-ft.
b. At each label, arrows indicating direction of flow shall point away from label. If flow may be in both directions, use double headed arrows.
c. Lettering shall bear the full pipe system name as scheduled.
d. Lettering height shall be as follows:

Outside Pipe Diameter	Minimum Letter Height
3/4-in to 1-1/4-in	1/2-in
1-1/2-in to 2-in	3/4-in
2-1/2-in to 6-in	1-1/4-in
8-in to 10-in	2-1/2-in
Over 10-in	3-1/2-in

e. Two labels minimum each room, crawl space or compartment, unless otherwise approved.

PART 3 EXECUTION

3.01 GENERAL

A. Dirt, scale, weld splatter, water and other foreign matter shall be removed from the inside and outside of all pipe and sub-assemblies prior to installing.

B. Pipe joints and connections to equipment shall be made in such a manner as to produce a minimum of strain at the joint.

C. Test Connections:

1. Provide 1/2-in female NPT test connection equipped with 1/2-in stainless steel plug on all pump suction and discharge lines. Where indicated on the Drawings, test connections should be equipped with bar stock valve and gauge. The connection shall be located on the discharge side of the trap between the trap and the first valve. It shall consist of a 1/2-in branch connection terminated with a gate valve.

D. Installation of Expansion Joints and Flexible Connectors:

1. Piping systems shall be aligned prior to installation of expansion fittings. Alignment shall be provided by fitting a rigid pipe spool in place of the expansion joint. Prior to testing of the piping system, the pipe spool shall be replaced with the specified expansion or flexible fitting.

2. In addition to the locations noted on the Drawings and in PART 2, expansion fittings and anchors shall be located and spaced as specified by the Expansion Joint Manufacturer's Association. The expansion joints/flexible connectors shall not be installed during times of temperature extreme or in a fully compressed or fully expanded condition.

E. Installation of Sleeve Couplings:

1. Unless otherwise required by the manufacturer's instructions, prior to installation of sleeve couplings, the pipe ends shall be cleaned thoroughly for a distance of at least 12-in. Soapy water may be used as a gasket lubricant. A follower and gasket, in that order, shall be slipped over each pipe to a distance of about 6-in from the end, the middle ring shall be placed on the already installed pipe and shall be inserted into the middle ring flair and brought to proper position in relation to the pipe already installed. The gaskets and followers shall then be pressed evenly and firmly into the middle ring flares.

2. After the bolts have been inserted and all nuts have been made up fingertight, diametrically opposite nuts shall be progressively and uniformly tightened all around the joint, preferably by use of a torque wrench of the appropriate size and torque for the bolts.

3. Correct torque as indicated by a torque wrench shall not exceed 75 ft-lb for 5/8-in bolts and 90 ft-lb for 3/4-in bolts.

4. If a wrench other than a torque wrench is used, it should be no longer than 12-in so that when used by the average person the above torque values shall not be exceeded.

5. To prevent sleeve couplings from pulling apart under pressure, a suitable harnessing or flange clamp assembly shall be provided and installed where shown on the Drawings, directed by the Engineer or required elsewhere under Division 15 concerning anchorage.

6. Note the additional locations required for sleeve couplings in PART 2. Also note Contractor's responsibility for locating, providing and installing restraints.

F. Installation of Pipeline Appurtenances:

1. Pipeline appurtenances shall be installed as required and in accordance with the manufacturer's recommendations, as acceptable to the Engineer.

2. Gauges, meters and similar in-line items shall be isolated from testing pressures in excess of the rated pressure of the assembly.

3. Use Teflon tape on all screwed fittings.

G. Installation of Unions:

1. Use unions to allow dismantling of pipe, valves, and equipment.

H. Welding:

1. Welding shall be in accordance with ANSI B31 and AWS B3.0.

2. Install welding fittings on all welded lines. Make changes in direction and intersection of lines with welding fittings. Do not miter pipes to form elbows or notch straight runs to form tees, or any similar construction. Do not employ welder who has not been fully qualified in above specified procedure and so certified by approved welding bureau or similar locally recognized testing authority.

I. Installation of Flanged Joints:

1. Make flanged joints with bolts; bolt studs with nut on each end; or studs with nuts where one flange is tapped. Use number and size of bolts conforming to same ANSI Standard as flanges. Before flanges pieces are assembled, remove rust resistant coating from machined surfaces, clean gaskets and smooth all burrs and other defects. Make up flanged joints tight, care being taken to prevent undue strain upon valves or other pieces of equipment.

3.02 TESTING

A. Test all pipelines for water/gas tightness as specified in the Piping or System Sections. Furnish all labor, testing plugs or caps, pressure pumps, pipe connections, gauges and all other equipment required. Testing shall be performed in accordance with one or more of the testing procedures appended to this Section as specified in each Piping or System Section. All testing shall be performed in the presence of the Engineer.

B. Repair faulty joints or remove defective pipe and fittings and replace as approved by the Engineer. Retest.

3.03 DISINFECTION

A. After satisfactory testing, all potable water systems shall be thoroughly disinfected with a solution of not less than 50 ppm of available chlorine. The disinfecting solution shall be allowed to remain in the system for a period of three hours after which time all valves and faucets shall be opened and the system shall be flushed with clean water.

B. Water being flushed from structures or pipelines after disinfection with a chlorine residual of two mg/l or greater, shall be treated with a dechlorination solution, in a method approved by the Engineer, prior to discharge.

END OF SECTION

© 2019 CDM Smith
All Rights Reserved

THIS PAGE INTENTIONALLY LEFT BLANK

© 2019 CDM Smith
All Rights Reserved

SECTION 15140
PIPE HANGERS AND SUPPORTS

PART 1 GENERAL

1.01 SCOPE OF WORK

A. Furnish all labor, materials, equipment and incidentals and install a complete system of pipe hangers, supports, concrete inserts and anchor bolts including all metallic hanging and supporting devices for supporting non-buried piping as shown on the Drawings and as specified herein.

B. The absence of pipe supports and details on the Drawings shall not relieve the Contractor of the responsibility for providing them. Pipe supports indicated on the Drawings are shown only to convey the intent of the design for a particular location and are not intended to represent a complete system.

1.02 RELATED WORK

A. Concrete is included in Division 3.

B. Miscellaneous metal is included in Section 05500.

C. Field painting is included in Division 9.

D. Pipe and fittings are included in respective sections of Division 15.

E. Piping Specialties are included in Section 15120.

F. Valves and appurtenances are included in Section 15100.

G. Hangers and supports pertaining to HVAC and Plumbing systems are included in their respective Sections.

1.03 SUBMITTALS

A. Submit, in accordance with Section 01300, complete sets of shop drawings of all items to be furnished under this Section. Submittals shall include complete layouts, schedules, location plans and complete total bill of materials for all pipe support systems.

B. Submittals shall include a representative catalog cut for each different type of pipe hanger or support indicating the materials of construction, important dimensions and range of pipe sizes for which that hanger is suitable. Where standard hangers and/or supports are not suitable, submit detailed drawings showing materials and details of construction for each type of special hanger and/or support. Provide detailed information on anti-seize compound.

C. Submittals shall include complete piping drawings as submitted for each piping submittal indicating type of hanger and/or support, location, magnitude of load transmitted to the structure and type of anchor, guide and other pipe supporting appurtenances including structural fasteners.

D. Types and locations of pipe hangers and/or supports shall also be shown on the piping layouts for each piping submittal as specified in the respective Division(s) 13 and 15 pipe sections. Service conditions for each piping system, including service temperatures, and operating and test pressures, are tabulated in the piping sections.

E. Submit complete design data for pipe support systems to show conformance with this Section.

1.04 REFERENCE STANDARDS

A. Manufacturer's Standardization Society of the Valve and Fittings Industry (MSS):

1. MSS SP-58 - Pipe Hangers and Supports - Materials, Design and Manufacture.

2. MSS SP-69 - Pipe Hangers and Supports - Selection and Application.

B. ASTM International:

1. ASTM A36 - Standard Specification for Carbon Structural Steel.

2. ASTM A307 - Standard Specification for Carbon Steel Bolts and Studs, 60,000 psi Tensile Strength.

C. American National Standards Institute (ANSI):

1. ANSI B31.1 - Power Piping.

D. Where reference is made to one of the above standards, the revision in effect at the time of bid opening shall apply.

1.05 QUALITY ASSURANCE

A. All hangers, supports and appurtenances shall conform to the latest applicable requirements of ANSI B31.1, except as supplemented or modified by the requirements of this Section.

B. All hangers, supports and appurtenances shall be of approved standard design where possible and shall be adequate to maintain the supported load in proper position under all operating conditions. The minimum working factor of safety for all supporting equipment, with the exception of springs, shall be five times the ultimate tensile strength of the material, assuming 10-ft of water-filled pipe being supported.

C. All pipe and appurtenances connected to equipment shall be supported in such a manner as to prevent any strain being imposed on the equipment. When manufacturers have indicated requirements that piping loads shall not be transmitted to their equipment, submit certification stating that such requirements have been complied with.

1.06 DELIVERY, STORAGE AND HANDLING

A. All supports and hangers shall be crated, delivered and uncrated so as to protect against any damage.

B. All parts shall be properly protected so that no damage or deterioration shall occur during a prolonged delay from the time of shipment until installation is completed.

C. Finished metal surfaces not galvanized, that are not of stainless steel construction, or that are not coated, shall be grease coated, to prevent rust and corrosion.

PART 2 PRODUCTS

2.01 GENERAL

A. All of the equipment specified herein is intended to support the various types of pipe and piping systems shown on the Drawings. It shall be the responsibility of the Contractor to develop final details and any details associated with special conditions not already covered to meet the system conditions (in particular system temperatures and pressures) specified in the respective Division 15 pipe sections.

B. All pipe and tubing shall be supported as required to prevent significant stresses in the pipe or tubing material, valves, fittings and other pipe appurtenances and to support and secure the pipe in the intended position and alignment. All supports shall be designed to adequately secure the pipe against excessive dislocation due to thermal expansion and contraction, internal flow forces and all probable external forces such as equipment, pipe and personnel contact. Structural steel members required to brace any piping from excessive dislocation shall conform to the applicable requirements of Section 05500 and shall be furnished and installed under this Section.

C. The Contractor may propose minor adjustments to the piping arrangements in order to simplify the supports, or in order to resolve minor conflicts in the work. Such an adjustment might involve minor change to a pipe centerline elevation so that a single trapeze support may be used.

D. All pipe and appurtenances connected to the equipment shall be supported in a manner to prevent any strain from being imposed on the equipment or piping system.

E. All rods, clamps, hangers, inserts, anchor bolts, brackets and components for interior pipe supports shall be furnished with galvanized finish, hot dipped or electro-galvanized coated, except where field welding is required, where cold-applied galvanizing may be used. Interior clamps on plastic pipe shall be plastic coated. Supports for copper pipe shall be copper plated or shall have a 1/16-in plastic coating. All rods, clamps, hangers, inserts, anchor bolts, brackets and components for exterior pipe, submerged pipe and pipe within outdoor structures shall be of Type 316 stainless steel.

F. Supports shall be sufficiently close together such that the sag of the pipe is within limits that will permit drainage and avoid excessive bending stresses from concentrated loads between supports.

G. All uninsulated non-metallic piping such as PVC, CPVC, etc, shall be protected from local stress concentrations at each support point. Protection shall be provided by galvanized steel protection shields or other method as approved by the Engineer. Where pipes are bottom supported 180 degrees, arc shields shall be furnished. Where 360 degree arc support is required, such as U bolts, protection shields shall be provided for the entire pipe circumference. Protection shields shall have an 18 gauge minimum thickness, not be less than 12-in in length and be securely fastened to pipe with stainless steel or galvanized metal straps not less than 1/2-in wide.

H. All insulated pipe shall be furnished with a rigid foam insulating saddle at each pipe support location as specified under respective pipe insulation. Provide protection shields as specified in at each support location.

I. Where pipe hangers and supports come in contact with copper piping provide protection from galvanic corrosion by; wrapping pipe with 1/16-in thick neoprene sheet material and galvanized protection shield; isolators similar to Elcen, Figure No. 228; or copper plated or PVC coated hangers and supports. All stainless steel piping shall be isolated from all ferrous materials, including galvanized steel by use of neoprene sheet material and protection shields, similar to above methods.

J. Pipe supports shall be provided as follows:

1. Cast iron and ductile iron, steel and stainless steel piping shall be supported at a maximum support spacing of 10-ft with a minimum of one support per pipe section at the joints.

2. Insofar as is possible, floor supports shall be given preference. Typical concrete supports are shown on the structural drawings. Base elbow and base tees shall be used where possible.

3. Support spacing for steel and stainless steel piping 2-in and smaller diameter shall not exceed 5-ft.

4. For all stainless steel piping, provide neoprene isolators between the pipe and support components.

5. Pipe supports shall not induce point loadings but shall distribute pipe loads evenly along the pipe circumference.

6. Supports shall be provided at changes in direction and elsewhere as shown in the Drawings or as specified herein. No piping shall be supported from other piping or from metal stairs, ladders and walkways, unless specifically directed or authorized by the Engineer.

7. Pipe supports shall be provided to minimize lateral forces through valves, both sides of split type couplings and sleeve type couplings and to minimize all pipe forces on pump housings. Pump housings shall not be utilized to support connecting pipes.

8. Effects of thermal expansion and contraction of the pipe shall be accounted for in the pipe support selection and installation.

K. Unless otherwise specified herein, pipe hangers and supports shall be standard catalogued components, conforming to the requirements of MSS-SP-58 and -69; and shall be as manufactured by Grinnell Co., Inc., Providence, RI; Carpenter & Patterson, Inc., Woburn, MA; F&S Central, Brooklyn NY; Elcen Metal Products Co., Franklin Park, IL and Unistrut Northeast, Cambridge, MA or equal. Reference to a specific figure number of a specific manufacturer is for the purpose of establishing a type and quality of product and shall not be considered as proprietary.

L. Required pipe supports for which the supports specified in this Section are not applicable shall be fabricated or constructed from standard structural steel shapes, concrete and anchor hardware similar to items previously specified herein and shall be subject to the approval of the Engineer.

M. Expansion anchors shall be equal to Kwik-Bolt as manufactured by the McCullock Industries, Minneapolis, MN or Wej-it by Wej-it Expansion Products, Inc., Bloomfield, CO. The length of expansion bolts shall be sufficient to place the wedge portion of the bolt a minimum of 1-in behind the steel reinforcement.

2.02 SINGLE AND MULTIPLE PIPE SUPPORTS

A. Single pipes located in a horizontal plane close to the floor shall be supported by one of the methods as shown on the Drawings and as specified herein.

B. Where shown on the Drawings, pipes 3-in in diameter and larger shall be supported by adjustable stanchions similar to F&S, Figure 427. Stanchions shall provide at least 4-in adjustment and be flange mounted to floor.

C. Pipes less than 3-in in diameter shall be held in position by supports fabricated from steel "C" channel, welded post base similar to Unistrut, Figure P2072A and pipe clamps similar to Unistrut, Figures P1109 thru P1126. Where required to assure adequate support, fabricate supports using two vertical members and post bases connected together by horizontal member of sufficient load capacity to support pipe. Wherever possible supports shall be fastened to nearby walls or other structural member to provide horizontal rigidity. More than one pipe may be supported from a common fabricated support.

D. Where shown on the Drawings, pipe shall be supported using concrete anchor posts. Pipe shall be securely fastened to the posts using suitable metal straps as required and as approved.

2.03 BASE ANCHOR SUPPORT

A. Where shown on the Drawings, pipe bends shall be supported using concrete anchor posts. Pipes shall be securely fastened to the concrete supports with suitable metal bands as required and approved by the Engineer. A felt insert shall be used to isolate the piping from the poured concrete.

2.04 SPECIAL SUPPORTS

A. For piping 3-in and smaller, the framework shall be as manufactured by the Unistrut Corporation; Globe-Strut as manufactured by the Metal Products Division of U.S. Gypsum or equal. For piping larger than 3-in, the support frame shall be fabricated from structural steel shapes and secured through the use of expansion anchors.

B. The assemblies shall be furnished complete with all nuts, bolts and fittings required for a complete assembly including end caps for all unistruts members.

C. The design of each individual framing system shall be the responsibility of the Contractor. Shop drawings, as specified above shall be submitted and shall show all details of the installation, including dimensions and types of supports. In all instances the completed frame shall be adequately braced to provide a complete rigid structure when all the piping has been attached.

D. Supports not otherwise described in this Section shall be fabricated or constructed from standard structural steel shapes in accordance with applicable provisions of Section 05500, or unistrut-type frame; have anchor hardware similar to items previously specified herein, shall meet the minimum requirements listed below and be subject to the approval of the Engineer.

1. Pipe support systems shall meet all requirements of this Section and all related Sections.

2. Complete design details of the pipe support system and system components shall be submitted for review and approval as specified in PART 1. No hanger or support shall be installed without the written approval of the Engineer.

3. The pipe support system shall not impose loads on the supporting structures in excess of the loads for which the supporting structure is designed.

2.05 SURFACE PREPARATION AND SHOP PRIME PAINTING

A. All surfaces shall be prepared and shop painted as part of the work of this Section. Surface preparation and shop painting shall be as specified in Section [09901] [09 91 10].

PART 3 EXECUTION

3.01 INSTALLATION

A. Proceed with the installation of piping and supports only after any building structural work has been completed and new concrete has reached its 28-day compressive strength.

B. The installation of pipe support systems shall in no way interfere with the operation of the overhead bridge cranes, monorails, access hatches, etc.

C. The installed systems shall not interfere with maintenance and operational access to any equipment installed under this Section, or any other related Section.

D. All pipes horizontal and vertical, requiring rigid support shall be supported from the building structure by approved methods. Supports shall be provided at changes in direction and elsewhere as shown in the Drawings or as specified herein. No piping shall be supported from metal stairs, ladders and walkways unless specifically directed or authorized by the Engineer.

E. All pipe supports shall be designed with liberal strength and stiffness to support the respective pipes under the maximum combination of peak loading conditions to include pipe weight, liquid weight, liquid movement and pressure forces, thermal expansion and contraction, vibrations and all probable externally applied forces. Prior to installation, all pipe supports shall be approved by the Engineer.

F. Pipe supports shall be provided to minimize lateral forces through valves, both sides of split type couplings and sleeve type couplings (within four pipe diameters) and to minimize all pipe forces on pump housings. Pump housings shall not be utilized to support connecting pipes.

G. Inserts for pipe hangers and supports shall be installed on forms before concrete is placed. Before setting these items, all Drawings and figures shall be checked which have a direct bearing on the pipe location. Responsibility for the proper location of pipe supports is included under this Section.

H. Continuous metal inserts shall be embedded flush with the concrete surface.

I. Apply anti-seize compound to all nuts and bolts. Supports installed without the approved compound shall be dismantled and correctly installed, at no additional cost to the Owner.

3.02 TESTING

A. All pipe support systems shall be tested for compliance with this Section. After installation, each pipe support system shall be tested in conjunction with the respective piping pressure tests. If any part of the pipe support system proves to be defective or inadequate, it shall be repaired or augmented under this Section to the satisfaction of the Engineer.

END OF SECTION

© 2019 CDM Smith
All Rights Reserved

THIS PAGE INTENTIONALLY LEFT BLANK

© 2019 CDM Smith
All Rights Reserved

SECTION 15400
PLUMBING - GENERAL PROVISIONS

PART 1 GENERAL

1.01 SCOPE OF WORK

A. Furnish all labor, materials, equipment, services and incidentals required and install and test a complete plumbing system as specified and shown on the following:

15400	Plumbing - General Provisions
15600	Fuel Systems

B. Drawings

P-1	Plumbing Symbols and Abbreviations
P-2	Fuel System Plan
PD-1	Plumbing Details

C. More specifically the work shall include, but shall not be limited to the following:

1. All items included under the Scope of Work of other Plumbing Sections.

2. Cutting, coring and rough patching in accordance with Section 01045.

3. Final connections for laboratory furniture and equipment. (Refer to Part 3.)

4. All parts necessary to make a complete Plumbing System ready for continuous operation.

5. The absence of pipe supports and details on the Drawings shall not relieve the Construction Contractor of the responsibility for providing them.

1.02 RELATED WORK

A. The following work related to, but not covered under the plumbing work will be done under other related Sections.

1. All piping systems in the building other than the plumbing work specified in the Plumbing Sections.

2. Yard piping for sanitary drains beyond 5-ft-0-in outside the building unless otherwise indicated.

3. Source for potable and protected water services shall terminate as hereinafter specified.

4. Valve tags are furnished under Division 1, but installed on Plumbing items under this Section.

5. Excavating and backfilling is included under Division 2.

6. Sump pit frames and covers not specified under the plumbing work will be included under Division 5.

7. Manholes, catch basins, gasoline trap and buried pipe encasement are included under Division 2.

8. Concrete is included under Division 3.

9. Painting is included under Division 9.

10. Portable fire extinguishers are included under Division 10.

11. Laboratory Furniture and Equipment is included under Division 12.

12. Ductwork is included elsewhere in Division 15.

13. Fire Protection Systems are included elsewhere under Division 15.

14. Electrical work is included under Division 16.

1.03 SUBMITTALS

A. Inspection by the Engineer's representative or failure to inspect shall not relieve the Construction Contractor of responsibility to provide materials and perform the work in accordance with the documents.

B. Submit, in accordance with Section 01300, shop drawings and product data to establish compliance with this Section. Submittals shall include the following:

1. Shop drawings and technical literature covering details of all plumbing piping systems, equipment, fixtures and accessories being furnished under this Section prior to fabrication, assembly or shipment.

2. Provide a recommended list of spare parts to be provided.

3. Furnish no less than 60 days before start-up, a schedule of all exposed valves installed under this Section. The schedule shall include for each valve the location, type, a number, words to identify the valve function, and the normal operating position.

4. Detailed layout drawings of all piping shall be provided. Drawings shall show the locations of piping appurtenances, specialties, and all valve banks.

5. For units that will be shipped exposed, provide a description of the protective packaging that will be used during transit.

6. Provide manufacturers catalogs, literature, and engineering data on all hangers and supports. Load ratings, materials, and installation shall be in accordance with the recommendations of MSS SP-58 and MSS SP-69.

7. All submittals shall contain a statement that Section 15400, 15410, 15440, and 15450 and all other referenced Sections have been read and complied with. The certification

statement shall be made by all of the following that are applicable; the Construction Contractor, sub-contractor and the vendor. The statement shall be an individual statement for each party involved, and shall be included with every submittal and resubmittal.

C. Operation and Maintenance Data

1. Operating and maintenance manuals shall be furnished to the Engineer as provided in 01730. The manuals shall be prepared specifically for this installation and shall include all required cuts, drawings, equipment lists, descriptions, etc, that are required to assist operation and maintenance personnel unfamiliar with such equipment. The following information shall be considered a minimum. Where applicable, provide information required for specific pieces of equipment.
   a. Personnel familiar with the operation and maintenance of the specific information shall prepare manuals.
   b. Equipment shall be identified with the Engineers Equipment Numbers and Identification as shown in the Schedules and on the Drawings.

2. Contents - Each volume shall contain the following minimum contents:
   a. Installation including instructions for unpacking, installing, aligning, checking and testing. Foundation data, allowable piping loads, and electrical design shall be included.
   b. Operating Instructions to provide pre-operational checks, start up and shut down, and description of all control modes. Include emergency procedures for all fault conditions and actions to be taken for all alarms. Procedures for long term storage shall be included.
   c. Maintenance shall include preventive, and corrective. Schedules for test of other functions are to be included. Provide a list of tools required to service the equipment. Trouble shooting instructions to include a trouble-shooting guide shall be included.

3. Spare Parts List

4. Shop Drawing Data to include performance curves, data sheets, flow diagrams, wiring diagrams, and descriptive drawings.

D. In general, corrections or comments or lack thereof, made relative to submittals during review shall not relieve the Contractor from compliance with the requirements of the drawings and specifications. Submittals are for review of general conformance with the design concepts of the project and general compliance with the contract documents. The Contractor is responsible for the final design conforming and correlating all quantities and dimensions, selecting fabrication processes and techniques of construction, coordinating the work of all trades, and performing the work in a safe and satisfactory manner.

1.04 MANUFACTURERS SERVICES

A. A representative of the manufacturer who has complete knowledge of proper operation and maintenance shall be provided for the number of 8 hour days as listed below to instruct representatives of the Owner and the Engineer on proper operation and maintenance. With the Owner's permission, this work may be conducted in conjunction with the inspection and the installation and test run as provided under Part 3. If there are difficulties in operation of the equipment due to the manufacturer's design or fabrication, additional service shall be provided at no additional cost to the Owner.

1.05 REFERENCE STANDARDS

A. American Society for Testing and Materials (ASTM)

B. American National Standards Institute (ANSI)

C. American Water Works Association (AWWA)

D. National Fire Protection Association (NFPA)

E. National Electrical Manufacturers Association (NEMA)

F. Plumbing and Drainage Institute (PDI)

G. Cast Iron Soil Pipe Institute (CISP)

H. Underwriters Laboratories (UL)

I. Factory Mutual (FM)

J. American Society of Plumbing Engineers Data Book (May be used as a design guide.)

K. Where reference is made to one of the above standards, the revision in effect at the time of bid opening shall apply.

1.06 QUALITY ASSURANCE

A. The Construction Contractor shall be fully responsible for the proper execution and performance of the work described herein. It shall be their responsibility to inspect all installation conditions and bring to the attention of the Engineer any conditions which may affect their work adversely. They shall report to the Engineer, prior to commencing any portion of this work, any conditions unsuitable for the installation of their portion of the work.

B. All products and materials provided for potable water service application under the plumbing sections shall be certified “lead-free”, by an ANSI certified, third party independent organization. The term “lead-free” shall refer to the wetted surface of pipe, fittings, and fixtures in potable water systems that have a weighted average lead content less than or equal to 0.25 percent per the Safe Drinking Water Act (Sec. 1417) amended 1-4-2011 and other equivalent state regulations. Non lead-free materials can be purchased and installed in non-potable water systems.

C. Mention herein or indication on the Drawings of equipment, materials, operation or methods shall require that each item mentioned or indicated be provided to make a complete system of plumbing ready for continuous operation.

D. The location of all equipment, fixtures and piping shall be considered as approximate only and the right is reserved by the Engineer to change at any time, before the work is installed, the position of such equipment and piping to meet structural conditions and to provide proper headroom clearance or for other sufficient causes and such changes shall be made without additional expense to the Owner.

E. Attention is called to the necessity for elimination of transmission of vibration from mechanical equipment to building structures. All equipment, therefore, shall be carefully selected and installed to meet this condition and isolators and water hammer arrestors shall be provided where required.

F. Instruct such persons as designated by the Owner in the care and use of all plumbing equipment and piping systems installed.

G. Comply with all the laws, ordinances, codes, rules and regulations of the State, local or other authorities having jurisdiction over any of the work specified herein.

H. Obtain all required permits and pay all legal fees for the same and in general take complete charge and responsibility for all legal requirements pertaining to this Section of the work.

I. Requirements set forth in this Section and indicated on the Drawings shall be followed when in excess of the required or minimum regulations.

J. If any work is performed and subsequent changes are necessary to conform to the regulations, such change shall be made as part of this work at no additional cost to the Owner.

K. All work shown on the Drawings is intended to be approximately correct to scale, but figured dimensions and detailed drawings shall be followed in every case. The Drawings shall be taken in a sense as diagrammatic. Size of pipes and general method of running them are shown, but it is not intended to show every offset and fitting nor every structural difficulty that may be encountered. To carry out the true intent and purpose of the Drawings all necessary parts to make complete working systems ready for use shall be furnished without extra charge.

L. Refer to the Structural and Architectural Drawings which indicate the type of construction in which the work shall be installed. Locations shown on the Plumbing Drawings shall be checked against the general and detailed drawings of the construction proper. All measurements must be taken at the building.

M. All equipment of a given type included in this Section shall be furnished by or through a single manufacturer or as specified on the schedules

N. Inspection by the Engineer's representative or failure to inspect shall not relieve the Construction Contractor of responsibility to provide materials and perform the work in accordance with the documents.

O. The piping manufacturer shall furnish an affidavit of compliance certifying that all materials used and work performed complies with the specified requirements. The Construction

Contractor shall provide copies of mill test confirming the type of material used in the various components.

P. The Owner and Engineer reserve the right to sample and test any materials after delivery and to reject all components represented by a sample that fails to comply with the specified requirements.

Q. An authorized representative of the manufacturer shall perform the initial startup of the equipment. The Owner and Engineer shall witness startup. The use of local sales representatives to perform this work is not acceptable, unless the manufacturer provides documented evidence that the sales representative has been specifically trained for this work.

R. All rotating parts of equipment shall be statically and dynamically balanced at the factory.

1.07 ENGINEERING SERVICES

A. When engineering services are specified to be provided by the Construction Contractor, the Construction Contractor shall retain a licensed professional engineer to perform the work. The engineer shall be licensed at the time the work is done and in the state in which the project is located. If the state issues discipline specific licenses, the engineer shall be licensed in the applicable discipline. In addition, the engineer shall be experienced in the type of work being provided.

B. All work is to be done according to the applicable regulations for professional engineers, to include signing, sealing and dating documents. When submittals are required by a professional engineer, in addition to state required signing and sealing, a copy of the current wallet card or wall certificate indicating the date of expiration shall be included with the submittal.

1.08 SERVICE AND UTILITY CONNECTIONS

A. Sanitary

1. The sanitary waste drainage systems shall terminate as shown on the Drawings.

B. Water Service

1. The source of water for potable and protected use in the building will be brought to the building under another Division of the work and left as a flanged connection 8-in to 12-in inside the foundation wall or above the finish floor, except where noted otherwise.

2. The backflow preventer units shall be furnished and installed complete with all components as shown on Water Piping Diagrams. The water connections shall be made to these units as shown and from these points furnish and install all water to the building, equipment, fixtures and apparatus, as shown on the Drawings.

1.09 DELIVERY, STORAGE AND HANDLING

A. All materials shall be inspected for size, quality and quantity against approved shop drawings upon delivery.

B. Delivery schedule of all equipment shall be coordinated with the Construction Contractor. Equipment ready for shipment prior to the agreed on shipping date shall be stored without cost to the Owner by the manufacturer.

C. All materials shall be suitably packed for shipment and long term storage. Each package shall be labeled to indicate the project and the contents of each package. Where applicable, equipment numbers shall be marked on the container.

D. All equipment shipped that is exposed such as on a flat bed truck shall be protected during transit. The equipment shall be protected from moisture, road salt, dirt and stones or other materials thrown up from other vehicles. Electrical components shall be protected as above, but with special attention to moisture. The method of shipment protection shall be defined in the submittals.

E. Instructions for the servicing and startup of equipment in long term or prolonged storage shall accompany each item.

F. All materials shall be stored in a covered dry location off of the ground. When required to protect the materials they shall be stored in a temperature-controlled location.

1.10 COORDINATION

A. The Drawings indicate the extent and general arrangement of the systems. If any departures from the drawings or specifications are deemed necessary, details of such departures and the reasons therefore shall be submitted as soon as practical for review. No such departures shall be made without the prior written concurrence of the Engineer.

B. The Construction Contractor shall coordinate the location and placement of all concrete inserts and welding attachments with the structural engineer.

C. The Construction Contractor shall assume full responsibility for coordination of the Plumbing systems, including; scheduling, and verification that all structures, piping and the mounting of equipment are compatible.

D. The Construction Contractor shall start up each piece of equipment and system and shall make all adjustments so that the system is placed in proper operating condition.

1.11 ELECTRICAL EQUIPMENT

A. Electric motors in NEMA frame sizes shall conform to the requirements in Section 16150, unless otherwise specified herein.

B. Electrical equipment which is furnished under this Section shall meet the requirements specified in Division 16:

1. Disconnect switches, motor starters and combination motor starters (starters with disconnecting means and short circuit protection) shall be as specified in Section 16191.

2. Cord-connected controls for hazardous areas shall be provided with intrinsically safe relays, which shall be as specified in Section 16191.

3. Raceways, boxes, fittings and supports shall be as specified in Section 16110.

4. Wires and cables shall be as specified in Section 16120.

C. Electrical enclosures, panels and components shall be suitable for the environment and electrical classification for the space they are located in. The type of enclosure for the various spaces shall be as specified in Division 16. Refer to the electrical drawings for the space classifications.

1.12 SUPPORTS

A. All components shall be provided with lugs, brackets or field supplied devices to allow the components to be firmly attached to the structure. The lugs, brackets or field supplied devices shall be sized to withstand the seismic and wind loads for the area and type of application.

PART 2 PRODUCTS (NOT USED)

PART 3 EXECUTION

3.01 INSTALLATION

A. All the items specified in Sections 15600 under PART 2 shall be installed according to the applicable manufacturer's recommendations, the details shown on the Drawings and as specified herein and in other related Sections.

B. The Construction Contractor shall start up each piece of equipment and system and shall make all adjustments so that the system is placed in proper operating condition.

C. The Construction Contractor shall not install any equipment or materials until the Owner and Engineer have approved all submittals. If any equipment or materials are installed prior to approval of the submittals, it shall be at the Construction Contractor's risk.

D. All work shall be installed in accordance with the manufacturer's printed instructions and shall be rigid, plumb and true to line, with all parts in perfect working order. Maintain protective covers on all units until final cleanup time and at that time remove covers and clean and polish all surfaces.

3.02 VALVE TAGS

A. The work of this Section shall also include the installation of valve tags furnished by the Construction Contractor. All valves provided under this Section shall be tagged.

3.03 PROTECTION

A. Materials, fixtures and equipment shall be properly protected at all times and all pipe openings shall be temporarily closed so as to prevent obstruction and damage.

3.04 COORDINATION SKETCHES

A. It shall be the responsibility of the subcontractor to have employed a competent coordinator of mechanical systems and as such to provide all coordination of drawings or sketches as may be required or deemed necessary by the Engineer to obtain the required ceiling heights and eliminate conflicts with all piping, ducts and electrical installation.

END OF SECTION

© 2019 CDM Smith
All Rights Reserved

THIS PAGE INTENTIONALLY LEFT BLANK

© 2019 CDM Smith
All Rights Reserved

SECTION 15500
HVAC

PART 1 GENERAL

1.01 SCOPE OF WORK

A. These Sections and Drawings cover(s) the requirements of the HVAC Work to be performed and shall not void any of the requirements specified under the General Conditions or General Requirements.

B. The areas where work is to be accomplished are specified and shown in the following:

1. Specification Sections

15500	HVAC
15990	Testing, Adjusting, and Balancing

2. Drawings

H-1	HVAC Symbols and Abbreviations
H-2	Electrical Building HVAC Plan
HD-1	HVAC Schedules
HD-2	HVAC Details

C. The requirements specified herein shall be modified only if specified otherwise for particular application in other Divisions.

D. This HVAC specification is incomplete without the information contained on the Drawings and in the Schedules on the Drawings.

E. Work included under the "Scope of Work" of this HVAC Section includes all labor, material, equipment, tools and services necessary to furnish, deliver, unload, install, test and place in satisfactory operation, the equipment, services and systems as called for under the HVAC Section(s) including any incidental work not shown, or not specified but which can reasonably be inferred as belonging to the various systems and necessary in good practice to provide complete and fully operational systems. Cutting and patching is included in this Section and shall be done as described in Division 1 unless otherwise indicated.

F. Equipment shall consist of the following:

1. Split system units, condensing units, air handling units, and filters

G. The following work descriptions are not intended to in any way limit the above broad statement, but are intended as a more specific mention of the most important items included therein.

1. Booster Pump Electrical Building: Provide split system electrical room air conditioning system, including all associated equipment, controls, ductwork, air distribution devices, and piping.

H. Outdoor Design Conditions

Summer:	94ºF Dry-bulb, 77ºF Wet-bulb
Winter	29ºF Dry-bulb
Site Elevation	~39.8 ft. Above Sea Level

I. Indoor Design Conditions

Space Designation	Summer Space Temp. °F	Outdoor Air Vent.	Winter Space Temp °F	Outdoor Air Vent.
Electrical Rooms	80 ± 5°F	N/A	Ambient	N/A

J. This Section is incomplete without the information contained in the HVAC equipment schedules on the Drawings. Provide equipment of the type, size, capacity and arrangement as shown on the Drawings and as scheduled. Equipment shall consist of the particular components listed in the schedules in addition to those components normally required for the type of unit. The order of component assembly will be as stated in the schedule. Particular attention must be paid to the remarks and notes in the schedules and on the Drawings.

K. All ductwork, piping, and equipment shown on the Drawings is intended to be approximately correct to scale, but figured dimensions and detailed drawings of the actual equipment furnished shall be followed in every case. The Drawings shall be taken in a sense as diagrammatic. Size of ductwork and piping are shown, but it is not the intent to show every offset or fitting, nor every hanger or support, or structural difficulty that may be encountered. To carry out the intent and purpose of the drawings all necessary parts to make a complete working system ready for use shall be furnished without extra charge. The Construction Contractor shall be responsible to coordinate the system installation and routing with the work of all trades.

L. Furnish and install all HVAC Systems in accordance with all requirements of the Florida Mechanical Code, the Florida Building Code, all other applicable codes and standards and the requirements of this specification.

1.02 RELATED WORK

A. Cutting and patching is included in Division 1, except for items specified herein.

B. Temporary, cooling, heating, electric power and lighting is included in Division 1.

C. Trenching, excavation and backfill is included in Division 2, except for items specified herein.

D. Concrete work is included in Division 3, except for required HVAC anchor bolts, sleeves and templates which shall be furnished under this Section.

E. Structural steel and miscellaneous metal is included in Division 5, except for supplementary steel required for HVAC hangers, equipment supports, anchors and guides, which shall be furnished under this Section.

F. Flashing and counterflashing is included in Division 7, except for items specified herein.

G. Painting is included in Division 9, except for factory finished HVAC equipment, HVAC shop painting and HVAC identification labeling.

H. Exterior louvers are included in Division 10.

I. Plumbing work is included under the Plumbing Section (Division) of this Division (Specification) except for water and drain closing in connections to HVAC equipment.

J. Electrical field wiring is included in Division 16, except for field wiring for automatic temperature controls as specified herein or as shown on the HVAC Drawings.

1.03 SUBMITTALS

A. Submit, in accordance with Section 01300, shop drawings and product data for the following:

1. Catalog cuts and data sheets for all equipment.

2. Design calculations for record purposes, signed and sealed by a professional engineer hired by the Construction Contractor as specified in 1.08, Engineering Services. Engineering services shall be provided as required in Part 2.

3. Automatic control drawings with composite wiring diagrams, including bills of material and descriptions of operation for all systems. Panel layouts and name plate lists for all local and central panels. Data sheets for all control system components.

4. Complete damper schedules for damper submittals including the following for each type or model of damper to be furnished for the project: materials of construction for blades, frames, bearings, linkages and seals; flow and leakage characteristics; typical operating torque requirements or characteristics; options to be furnished; general installation and maintenance instructions. Damper schedules shall include damper type; unit served; damper service; damper size; duct size; drive linkage location; installation arrangement (flanged or in duct) and damper operator type.

5. All fans, submit in accordance with sections 01300 and 15500, all data on the fan schedules. In addition, the submittal shall include catalog data, fan data sheets with a description of the proposed fan, fan size, type, arrangement, materials of construction, weight, motor horsepower, motor type, power supply, and frame size. Provide catalog data and selections for vibration isolators, include materials of construction. For belt drive equipment; provide drive data indicating the sheave sizes, belts size, number and length. Each submittal shall include pertinent equipment dimensional data, fan performance (operating data) information, and a performance curve showing the fan operating point and range. Minimum curve size shall be 8-in by 6-in. Faxed copies of curves are not acceptable. A list of accessories to be furnished shall be included on each submittal. Copies of operating and maintenance manuals shall be submitted. Significant dimensional differences between the specified equipment and the proposed equipment shall be noted on the equipment submittal. The Construction Contractor shall provide data to show the dimensionally different equipment will fit within the space and still provide suitable clearance. Where corrosion resistance is required, provide conformation of material suitability for the specified service.

6. For all air handling units, submit, in accordance with Section 01300 and 15500, the following:
   a. Unit data sheets; to include catalog data, a description of the proposed unit, size, type, arrangement, and materials of construction.
   b. For belt drive equipment, provide drive data indicating sheave sizes, belt size, number and length.
   c. Each submittal shall include pertinent equipment dimensional data, heating and cooling coil operating data. Submit, in accordance with Sections 01300 and 15500, all data and the unit schedules. The submittal shall include fan data sheets with a description of the proposed fan, fan size, type, arrangement, materials of construction, weight, motor horsepower, motor type, power supply, and frame size. Provide catalog data and selections for vibration isolators, include materials of construction. For belt drive equipment; provide drive data indicating the sheave sizes, belts size, number and length. Each submittal shall include pertinent equipment dimensional data, fan performance (operating data) information, and a performance curve showing the fan operating point and range. Minimum curve size shall be 8-in by 6-in. Faxed copies of curves are not acceptable. A list of accessories to be furnished shall be included on each submittal. Copies of operating and maintenance manuals shall be submitted. Significant dimensional differences between the specified equipment and the proposed equipment shall be noted on the equipment submittal. The Construction Contractor shall provide data to show the dimensionally different equipment will fit within the space and still provide suitable clearance. Where corrosion resistance is required, provide conformation of material suitability for the specified service.
   d. For heating sections, provide information on type of heating, air entering and leaving conditions, air pressure drop, heating media entering and leaving conditions and flow or consumption, and pressure drop. Provide size, type, arrangement, materials of construction, and operating weight.
   e. For cooling sections, provide information on type of cooling, air entering and leaving conditions, air pressure drop, cooling media entering and leaving conditions, flow, and pressure drop. Provide size, type, arrangement, materials of construction, and operating weight.
   f. For condensing sections provide information on number and type of compressors, type of refrigerant and refrigerant charge, and controls provided and operating weight. Provide electrical data for power and controls. For condensing coils, provide air entering and leaving conditions, air pressure drop, size, type, arrangement, and materials of construction.
   g. Pertinent data on standard filters: types and sizes, quantity of modules required for each filter type, efficiency ratings performance data and manufacturer catalog cutsheets.
   h. List of accessories to be furnished shall be included on each submittal.
   i. Provide a recommended list of spare parts to be provided.

7. Where called for on the schedules, provide certified test data for the fan.

8. Detailed equipment, ductwork and piping layout drawings; minimum scale 1/4-in = 1-ft-0-in for interior systems and equipment, dimension clear service spaces for motors and drives, filter, coils and spacer section access doors, and ductwork access panels and doors. (Site layout drawings and roof plans showing HVAC equipment and systems may be prepared and submitted at scales smaller than 1/4-in = 1-ft-0-in, subject to Engineer's prior approval.)

9. Standard shop and field installation details for transitions, elbows, takeoffs, discharge nozzles, turning vanes, access panels and doors, volume control and splitter dampers and extractors.

10. Piping and appurtenances, materials and joining methods. Pipe hanger materials and methods.

11. Ductwork materials, joining methods, reinforcing and material gauges. Where options are allowed by SMACNA, the proposed option shall be clearly defined. Indicate proposed materials and methods for ductwork and equipment hangers.

12. Prepare dimensional comparisons between proposed equipment and scheduled equipment when the proposed equipment is dimensionally larger than that scheduled. Do not propose dimensionally larger equipment from an alternate manufacturer for installation in confined areas, or when the installation of alternate equipment will result in reduction of service access below that recommended by the manufacturer.

13. Prepare layouts showing size, arrangement, and routing of field fabricated refrigerant piping for split-systems and air handling units with remote condensers. Include a letter from the AC system manufacturer indicating their approval of the proposed sizing and routing.

14. For units that will be shipped exposed, provide a description of the protective packaging that will be used during transit.

15. When special hangers, supports, anchors, or hold downs are required that are not covered by standards provide signed and sealed calculations and details for record purposes.

16. All submittals shall contain a statement that Section 15500 and all other referenced Sections have been read and complied with. The certification statement shall be made by all of the following that are applicable; the Construction Contractor, sub-contractor and the vendor. The statement shall be an individual statement for each party involved, and shall be included with every submittal and resubmittal.

17. Submit air system testing, adjusting and balancing reports for review and approval.

18. Operation and Maintenance Data
    a. Submit to the Engineer as provided in Section 01730, Operating and Maintenance Manuals. The following information shall be considered a minimum. Where applicable, provide information required for specific pieces of equipment.
        1) Personnel familiar with the operation and maintenance of the specific information shall prepare manuals.
        2) Equipment shall be identified with the Engineers Equipment Numbers and Identification as shown in the Schedules and on the Drawings.
    b. Contents - Each volume shall contain the following minimum contents:
        1) Installation including instructions for unpacking, installing, aligning, checking and testing. Foundation data, allowable piping loads, and electrical design shall be included.
        2) Operating Instructions to provide pre-operational checks, start up and shut down, and description of all control modes. Include emergency procedures for

all fault conditions and actions to be taken for all alarms. Procedures for long term storage shall be included.

3) Maintenance shall include preventive, and corrective. Schedules for test of other functions are to be included. Provide a list of tools required to service the equipment. Trouble shooting instructions to include a trouble-shooting guide shall be included.

c. Spare Parts List

d. Shop Drawing Data to include performance curves, data sheets, flow diagrams, wiring diagrams, and descriptive drawings.

19. Submit the following for each insulation by System: manufacturer's product data showing conformance with this Section for all required insulation, jackets, covers, coatings, adhesives, fasteners, supports and appurtenances; complete manufacturer's instructions for installation of all required items.

20. All materials deliveries must have accompanying manufacturer's certifications attesting to satisfactory results of product testing showing conformance with this Section.

21. Provide a recommended list of spare parts to be provided

22. In general, corrections or comments or lack there of, made relative to submittals during review shall not relieve the Construction Contractor from compliance with the requirements of the drawings and specifications. Submittals are for review of general conformance with the design concepts of the project and general compliance with the contract documents. The Construction Contractor is responsible for the final design conforming and correlating all quantities and dimensions, selecting fabrication processes and techniques of construction, coordinating the work of all trades, and performing the work in a safe and satisfactory manner.

1.04 REFERENCE STANDARDS

A. These standards shall be considered as minimum requirements. This is a general list and not all standards listed are necessarily referenced elsewhere in this Section. Specific requirements of this Section and/or Drawings shall have precedence. In case of conflict between published requirements, the Engineer shall determine which is to be followed.

B. Abbreviation and the title of Federal, State and industry standards, technical societies, associations and institutes and other organizations which may be used are as follows:

1. Associated Air Balance Council (AABC)

2. American Conference of Governmental Industrial Hygienists (ACGIH)

3. Air Diffusion Council (ADC)

4. American Bearing Manufacturers Association (ABMA)

5. Air Movement and Control Association (AMCA)

6. American National Standards Institute (ANSI)

7. Air Conditioning and Refrigeration Institute (ARI)

8. American Society of Heating, Refrigerating and Air Conditioning Engineers (ASHRAE)

9. American Society of Mechanical Engineers (ASME)

10. American Society for Testing and Materials (ASTM)

11. Factory Mutual (FM)

12. Institute of Electrical and Electronic Engineers (IEEE)

13. National Institute of Standards and Technology (NIST)

14. National Environmental Balancing Bureau (NEBB)

15. National Electrical Code (NEC)

16. National Electrical Manufacturers Association (NEMA)

17. National Fire Protection Association (NFPA)

18. Occupational Safety and Health Administration (OSHA)

19. Sheet Metal and Air Conditioning Contractors National Association (SMACNA)

20. Underwriters Laboratories (UL)

C. Where reference is made to one of the above standards, the revision in effect at the time of bid opening shall apply.

1.05 QUALITY ASSURANCE

A. Provide single source supplier/installer responsibility for the following systems or services:

1. ATC Equipment

2. Thermal Insulation

3. Testing and Balancing

4. Air Conditioning Equipment

B. Provide single source supplier/installer responsibility for systems where specified in other related Sections.

C. Services of Manufacturer's Representative

1. Provide services of a manufacturer's service engineer or test engineer, as required in Section 01170, specifically trained on type of equipment supplied or service provided.

Submit qualifications of service engineer for approval. Man-day requirements listed below are exclusive of travel time and do not relieve Construction Contractor of obligation to provide sufficient service to place equipment in satisfactory operation.

a. Automatic Temperature Controls - Operation and maintenance instructions. 2 Man-days.
b. Testing and Balancing - Spot check HVAC system flows and system inspection during the first year of operation at Owner's request exclusive of repair, malfunction, or other trouble-shooting service calls. 2 Man-days.
c. Air Conditioning Systems. 1 Man-day.

D. The insulation materials to be furnished under this section shall be essentially the standard products of manufactures regularly engaged in the manufacture of insulation systems.

E. Several manufacturers are indicated as acceptable for each type of insulation in these specifications. The insulation sub-contractor shall be responsible for determining that all insulation supplied for the project is suitable for installation in the spaces indicated. The insulation sub-contractor shall also insure that all materials used are compatible and in compliance with applicable codes and standards.

F. All equipment of a given type included in this section shall be furnished by or through a single manufacturer or as specified on the schedules

G. Inspection by the Engineer’s representative or failure to inspect shall not relieve the Construction Contractor of responsibility to provide materials and perform the work in accordance with the documents.

H. The Owner and Engineer reserve the right to sample and test any materials after delivery and to reject all components represented by a sample that fails to comply with the specified requirements.

I. An authorized representative of the manufacturer shall perform the initial startup of the equipment. The Owner and Engineer shall witness startup. The use of local sales representatives to perform this work is not acceptable, unless the manufacturer provides documented evidence that the sales representative has been specifically trained for this work.

J. All rotating parts of equipment shall be statically and dynamically balanced at the factory.

1.06 DELIVERY, STORAGE, AND HANDLING

A. All materials shall be inspected for size, quality and quantity against approved shop drawings upon delivery.

B. Delivery schedule of all equipment shall be coordinated with the Construction Contractor. Equipment ready for shipment prior to the agreed on shipping date shall be stored without cost to the Owner by the manufacturer.

C. All materials shall be suitably packed for shipment and long term storage. Each package shall be labeled to indicate the project and the contents of each package. Where applicable, equipment numbers shall be marked on the container.

D. All equipment shipped that is exposed such as on a flat bed truck shall be protected during transit. The equipment shall be protected from moisture, road salt, dirt and stones or other materials thrown up from other vehicles. Electrical components shall be protected as above, but with special attention to moisture. The method of shipment protection shall be defined in the submittals.

E. Instruction for the servicing and startup of equipment in long term or prolonged storage shall accompany each item.

F. All materials shall be stored in a covered dry location off of the ground. When required to protect the materials they shall be stored in a temperature-controlled location.

1.07 COORDINATION

A. The Drawings indicate the extent and general arrangement of the systems. If any departures from the drawings or specifications are deemed necessary, details of such departures and the reasons therefore shall be submitted as soon as practical for review. No such departures shall be made without the prior written concurrence of the Engineer.

B. The Construction Contractor shall coordinate the location and placement of all concrete inserts and welding attachments with the structural engineer.

C. The Construction Contractor shall assume full responsibility for coordination of the HVAC systems, including; scheduling, and verification that all structures, ducts, piping and the mounting of equipment are compatible.

D. The Construction Contractor shall not install any equipment or materials until the Owner and Engineer have approved all submittals. If any equipment or materials are installed prior to approval of the submittals, it shall be at the Construction Contractor's risk.

1.08 ENGINEERING SERVICES

A. When engineering services are specified to be provided by the Construction Contractor, the Construction Contractor shall retain a licensed professional engineer to perform the services. The engineer shall be licensed at the time the work is done and in the State in which the project is located. If the State issues discipline specific licenses, the engineer shall be licensed in the applicable discipline. In addition, the engineer shall be experienced in the type of work being provided.

B. All work is to be done according to the applicable regulations for professional engineers, to include signing, sealing and dating documents. When submittals are required by a professional engineer, in addition to state required signing and sealing, a copy of the current wallet card or wall certificate indicating the date of expiration shall be included with the submittal.

1.09 SPARE PARTS

A. Spare parts shall include all special items on the manufacturer's standard list of spare parts.

B. In addition to special items, the following spare parts shall be provided:

1. Furnish all special tools required for normal operation and proper servicing of the equipment.

2. Spare parts shall include all items on the manufacturer's standard list of spare parts and the following for each unit:
   a. One complete set of drive belts for each piece of belt driven equipment.
   b. One complete set of gaskets for each unit.

3. Provide a minimum of 1 or 5 percent of the total units rounded to the next full unit whichever is greater for each size and rating of the following components.
   a. Thermostats
   b. Control relays
   c. Damper operators
   d. Control transmitters
   e. Control transformers

4. Provide a minimum of 4 or 10 percent of the total units rounded to the next full unit whichever is greater for each size and rating of the following components.
   a. Panel light bulbs
   b. Fuses

C. Pack spare parts in containers suitable for extended storage without deterioration of the parts. Containers shall be clearly labeled designating contents, pieces of equipment for which intended and equipment identification numbers.

1.10 UL LISTING

A. All materials, equipment and system components of the HVAC system must be UL Listed. If factory UL listing of all system components is not available, the manufacturer must include in their scope of supply, ALL expenses associated with getting the complete installation UL field labeled, by a UL representative. This includes all hourly or per diem costs and expenses of the UL representative, all costs to bring the system or specific components, within UL field labeling compliance, and all costs of the manufacturer’s representative.

1.11 MAINTENANCE

A. Maintain and service all equipment and systems until the particular equipment or the system has been accepted by the Owner.

B. Maintenance shall include compliance with the manufacturers operating and maintenance instructions as well as periodic cleaning or replacement of air handling system filters.

C. Compile records of all maintenance and lubrication work performed on Owner or Construction Contractor furnished equipment. Maintain records at the construction or

installation site and make available at all times for review by the Owner or Engineer. At the request of the Owner or Engineer submit copies of these records to the Owner for information and/or review.

D. Provide all special tools required for normal maintenance. Tools shall be packaged in a steel case, clearly and indelibly marked on the exterior to indicate equipment for which tools are intended.

E. Provide to the Owner a list of all spare and replacement parts with individual prices and location where they are available. Prices shall remain in effect for a period of not less than 1 year after start-up and final acceptance.

1.12 DEFINITIONS

A. Particular terminology used under this Section is defined as follows:

1. Traffic Level and Personnel Level - Areas, including process areas, equipment rooms, boiler rooms and other areas where insulation may be damaged by normal activity and local personnel traffic. Area extends to 8-ft above floor, walkways, platforms and stairs, and horizontally 3-ft beyond the edge of walkways, platforms, and stairs.

2. Exposed Piping and Ductwork - Piping and ductwork visible from the floor level and includes all piping and ductwork in equipment rooms, boiler rooms, etc.

3. Concealed Piping and Ductwork - Piping and ductwork not visible from the floor level and includes piping and ductwork above hung ceilings and in shaftways.

4. Supply Air Ductwork - Ductwork carrying air from a fan or air handling unit to the space or spaces to which it will be introduced. This air may have been heated or cooled or in the case of ventilation system the air would be neither heated nor cooled. Supply air ductwork extends from the fan or air handling unit to the registers, grills or diffusers at the end of the ductwork.

5. Return Air Ductwork - Ductwork carrying air from the space it was supplied to back to a fan or air handling unit. Return air ductwork extends from the registers or grills at the end of the ductwork to the air handling unit or connection with an outdoor air intake duct.

6. Exhaust Air Ductwork - Ductwork carrying air from a space to a fan and then to be discharged to the outdoors. Exhaust air ductwork extends from the registers of grills at the end of the ductwork to the fan. From the fan exhaust ductwork extends to the discharge point, exhaust air damper, or exhaust air plenum, whichever comes first.

7. Relief Air Ductwork - Ductwork carrying air from a space without a fan to be discharged to the outdoors. Relief air ductwork extends from the registers or grills at the end of the ductwork, to the discharge point, relief air damper, or relief air plenum, whichever comes first.

8. Outdoor Air Ductwork - Ductwork carrying untreated air from the outside to a fan or air handling unit. Outdoor air ductwork starts at the intake point, outdoor air damper, or outdoor air plenum, whichever comes last. The outdoor air ductwork extends to the fan, air handling unit, or connection with a return air duct, whichever comes first.

9. Mixed Air Ductwork - Ductwork that can carry either return air or outdoor air or a combination of both. Mixed air ductwork starts at the connection of the return air and outdoor air ducts and extends to the fan or air handling unit.

10. Outdoor Air Plenum - A plenum that extends from the opening in the skin of the structure to the outdoor air duct. If the outdoor air damper is directly at the intake or there is no outdoor air damper, the plenum will extend to the first size reduction. If the outdoor air damper is not at the intake, the plenum will extend to the outdoor air damper.

11. Exhaust Air Plenum - A plenum that extends from the opening in the skin of the structure to the exhaust air duct. If the exhaust air damper is directly at the discharge or there is no exhaust air damper, the plenum will extend from the last size reduction. If the exhaust air damper is not at the discharge, the plenum will extend to the exhaust air damper.

12. Relief Air Plenum - A plenum that extends from the opening in the skin of the structure to the relief air duct. If the relief air damper is directly at the discharge or there is no relief air damper, the plenum will extend from the last size reduction. If the relief air damper is not at the discharge, the plenum will extend to the relief air damper.

13. Ventilated Spaces - Areas supplied with outdoor air on a continuous or intermittent basis. The outdoor air may be heated and/or cooled or untreated.

14. Heated Spaces - Areas where heat is supplied to maintain a minimum temperature during the heating season.

15. Unheated Spaces - Areas where heat is not applied and there is no minimum temperature during the heating season.

16. Conditioned Spaces - Areas that are provided with heating and mechanical cooling.

17. Non-Conditioned Spaces - Areas that are not provided with mechanical cooling.

18. Indoor Piping - Piping within a building that is not exposed to the weather.

19. Outdoor Piping - Piping that is not within a building and which is exposed to the weather.

20. Indoor Ductwork - Ductwork within a building that is not exposed to the weather.

21. Outdoor Ductwork - Ductwork that is not within a building and is exposed to the weather.

22. Hot Ductwork - Ductwork carrying air with a temperature above the surrounding space temperature.

23. Cold Ductwork - Ductwork carrying air with a temperature below the surrounding space temperature.

24. Hot/Cold Ductwork - Ductwork carrying air with a temperature that can be either above or below the surrounding space temperature.

25. Thermal Conductivity - The rate of heat flow through unit area of a homogeneous substance under the influence of unit temperature gradient in the direction perpendicular to the area. Units-BTU per (hour)(sq ft)(degrees F temp. difference)(per inch thickness).

26. Flues/Stacks/Breeching - Ductwork carrying products of combustion to atmosphere.

PART 2 PRODUCTS

2.01 ELECTRICAL EQUIPMENT

A. Electric Motors

1. Electric motors in NEMA frame sizes shall conform to the requirements in Section 16150 unless otherwise specified herein.

2. The motor manufacturer shall confirm that motors used to power equipment are provided with bearings that will provide a bearing life equal to the driven equipment or better. Confirmation shall be included with shop drawing submittal.

3. Motors will be selected to be non-overloading over the entire operating range of the equipment. A safety factor of 25 percent will be added to all motors up to and including 50 horsepower. A safety factor of 15 percent will be added to all motors over 50 horsepower. Motors indicated on the schedules are to be considered a minimum. This sizing is not to limit compliance with the above requirements

B. Electrical Equipment

1. Electrical equipment which is furnished under this Section shall meet the requirements specified in Division 16:
   a. Disconnect switches, motor starters and combination motor starters (starters with disconnecting means and short circuit protection) shall be as specified in Section 16191.
   b. Cord-connected controls for hazardous areas shall be provided with intrinsically safe relays, which shall be as specified in Section 16191.
   c. Raceways, boxes, fittings and supports shall be as specified in Section 16110.
   d. Wires and cables shall be as specified in Section 16120.

C. Electrical enclosures and panels to include automatic temperature control panels and components shall be suitable for the environment and electrical classification for the space they are located in. The type of enclosure for the various spaces shall be as specified in Division 16. Refer to the electrical drawings for the space classifications.

D. Where noted in the HVAC equipment schedules, or when shown on the Drawings, provide fan speed control switches and integral unit thermostats.

2.02 EQUIPMENT VIBRATION ISOLATOR AND MOUNTINGS

A. General

1. Unless otherwise specified in this Division all machinery or vibrating mechanical equipment shall be isolated from the building structure by vibration isolators with a minimum deflection as specified. Operating equipment that can transmit objectionable vibration and noise must be installed with special types of vibration isolators such as flexible connectors to ductwork, piping and wiring. In more critical areas and under particular conditions, additional vibration isolators shall be installed as specified in other

related Sections in this Division, or in specific equipment schedules.

2. All equipment shall be provided with attachment points for floor or suspended mounting that will safety transmit all loads including seismic to the supports.

3. The vibration isolator manufacturer shall be responsible for the proper selection of vibration isolators suitable for the particular application. Selection of the vibration isolator shall include the following factors.
   a. Equipment Weight
   b. Equipment operating frequencies
   c. Type of building support structure
   d. Seismic forces as required by the applicable building codes to include shear, tension and compression due to the code specified loads.

4. All floor mounted vibration isolators shall be bolted to the floor or framing on which they rest. Bolts shall be arranged to prevent transmission of vibration through the bolts.

5. All isolation devices for a single piece of equipment shall be selected for a uniform static deflection according to distribution of weight in the equipment.

6. All pieces of equipment that have a variation in weight during operation or maintenance such as, but not limited to, cooling towers and hoppers, shall have built-in vertical limit restraints to limit motion to a maximum of 1/4-in.

7. Isolators exposed to the weather, in rooms classified on electrical drawings as damp, wet, or corrosive or where called for on the Drawings shall be provided with corrosion protection. Steel parts other than springs shall be galvanized. Parts subject to wear, rubbing, shall be non-corrosive material such as rubber or stainless steel. Springs and hardware shall be cadmium plated or otherwise provided with an approved coating.

8. After installation of equipment, isolators shall be adjusted for proper loading and distribution of weight.

B. Types - The following types of vibration isolators may be used.

1. Isolation Types for Floor Mounting
   a. Single elastomer-in-shear isolators, molded mound shaped element designed for 1/4-in deflection under the imposed static load. Double elastomer-in-shear isolators shall be two such elements assembled in series or a molded element designed to provide 1/2-in deflection under the imposed static load. Elastomer-in-shear isolators shall be properly housed to prevent bulging and shall be provided with adequate facilities for bolting to equipment and floor slab.
   b. Heavy load pads shall be 1-1/4-in thick and shall consist of a high load capacity elastomer pad and sandwiched between two 1/8-in thick steel load distribution plates capable of supporting loads up to 250 psi. For large pad area, steel plates of suitable thickness shall be provided to distribute the load.
   c. Light load pads shall be neoprene corrugated single, laminated double or laminated with 1/2-in thick fine granular composition cork sandwiched between two 1/4-in layers of corrugated, oil resistant neoprene. Pads shall be capable of loading to 50 psi.

2. Rails and Bases - Rails and bases shall be of the following types based on the equipment and deflection required.
   a. Rubber in shear type shall be steel rails running the full length of the supported equipment and extending under any overhang to counteract cantilever effects. The rails shall incorporate single or double deflection elastomer-in-shear fastened in place and a continuous steel floor bearing plate running the full length of each rail. The rails shall be drilled and tapped to accept the supported equipment and shall serve as a template.
   b. Steel spring type shall be steel rails running the full length of the supported equipment and extending under any overhang to counteract cantilever effects. The rails shall consist of structural members supported by individual free standing springs. The rails shall be drilled to accept the supported equipment and shall serve as a template.
   c. Fans and their driving motors shall be mounted on structural steel channel members forming a rigid base. A common member parallel to the V-belt drive shall run the full length of the fan and motor and shall be of sufficient rigidity to resist the bending stress of belt pull. The structural steel base shall incorporate single or double deflection elastomer-in-shear elements or free standing springs located for proper weight distribution. The base shall be drilled and tapped to accept the fan and motor and shall serve as a template. Integral motor slide rails shall be provided and welded in place.

3. Unless specifically noted in other sections of the specification or on specific equipment schedules, all equipment will be provided with vibration isolation as defined by the following table:

Type of Equipment	Vibration Isolation Type	Minimum Deflection for Slab on Grade Inches	Minimum Deflection for up to 20-ft floor span inches	Minimum Deflection for 20-ft to 30-ft Floor Span Inches	Minimum Deflection for 30-ft to 40-ft Floor Span Inches
Condensing Units	Neoprene	0.25	--	--	--
Air Handling Units	Neoprene	0.25	--	--	--

C. Rigidly Mounted Equipment

1. When equipment does not require vibration isolation, it shall be firmly attached to the building structure. Bolts and support structure shall include allowances for seismic loads as required by the applicable building codes to include shear and moment loads.

2.03 FLAME AND SMOKE RATINGS

A. All materials, including adhesives, surface coatings, sealers, assemblies of several materials, insulation, jacketing, finish, etc, shall have flame spread ratings not over 25 (fire resistive), and smoke development ratings not over 50, as established by tests conducted in accordance with ASTM E84, NFPA 255, and UL 723.

B. These requirements apply to all circumstances whether the materials are field applied or applied by a manufacturer in his/her shop, or elsewhere, prior to delivery to the project.

2.04 V-BELT DRIVES

A. V-belt drives shall consist of the driver and driven sheaves and one or multiple matched V-belts. Select V-belt drives with belt horsepower ratings equal to or greater than 1.5 times the driving motor nameplate horsepower. Provide sheaves with steel, cast iron, or malleable iron split taper bushings and keyways on driven shafts of 3/4-in and larger diameter.

2.05 NOISE CRITERIA

A. The selection of pumps, fans, air handling equipment, air conditioners, heating ventilating and air conditioning machinery and mechanical equipment and the installation of the system components such as duct work and piping shall be such as not to exceed to maximum permissible noise for non-equipment spaces as defined in Table 2, Design Guidelines for HVAC System Noise in Unoccupied Spaces contained in the 1995 edition of the ASHRAE Application Handbook. Under no conditions shall the noise created by equipment exceed the levels of permissible noise exposures of occupational areas as established by the OSHA and other Federal, State and local safety and health standards, codes and ordinances.

B. The equipment supplier shall provide actual data for the equipment submitted. If the space does not meet the required criteria, and the noise level of the equipment is found to be the cause, the equipment supplier shall be responsible for the modifications required to correct the condition.

2.06 BEARINGS

A. General - Furnish equipment bearings suitable for the intended equipment service. Furnish bearings designed to carry both thrust and radial loads for equipment designed for all angle operation.

B. Provide extended lube lines with pressure relief equipped grease fittings for all bearings which are not readily accessible from outside the equipment.

C. Bearings for all equipment in the schedule below shall have heavy-duty grease lubricated self aligning ball or roller bearings. Bearings shall have ample thrust provision to prevent end play during the normal life of the bearing. Unless specifically noted otherwise, all fans shall have bearings for both the equipment and motors with the following ABMA L-50 life.

1. Fans over 3000 cfm - 100,000 hours.
2. Fan impellers greater than 10-in diameter

D. Belt driven fans, including air handling unit fans shall be equipped with self aligning single row ball bearings, double row tapered or spherical roller bearings.

E. For systems with bearings requiring L-50 lives of 200,000 hours or greater, the equipment supplier shall provide calculations for both the equipment bearings and the motor bearings to confirm the bearing selections. For belt drives, the calculations shall include the effect of the sheave size, number of belts, the sheave location on the shaft, and the location of the motor to the driven sheave.

F. Provide seals for bearings installed in airstreams, exposed outdoors, and for applications in corrosive or dusty atmosphere.

G. Provide bearings suitable for high temperature service where heat fan construction is required.

2.07 HANGERS, SUPPORTS, AND ANCHORS

A. General

1. Furnish supports, hangers and other devices necessary to support and anchor firmly and substantially the piping, equipment and ductwork described in this Section. Piping and duct support systems shall include restraints as required by the applicable building codes to withstand seismic and wind loading. Design shall be provided by a licensed professional engineer hired by the Construction Contractor as specified in Part 1. Signed and sealed calculations shall be submitted for record purposes.

2. All equipment, ductwork, piping, and supports that are installed outdoors shall be designed and installed to meet wind loadings as required by the Florida Mechanical Code, the Florida Building Code, all other applicable codes, and the requirements of this specification. Design services shall be provided by a licensed professional engineer as specified in Part 1. All equipment shall be furnished with factory supports and/or tie downs to properly secure the equipment to applicable structure, equipment pad, etc.

3. For all outdoor equipment, each equipment manufacturer shall provide a signed and sealed letter certifying that their equipment's unit integrity and anchoring system meet the requirements of the Florida Mechanical Code and the Florida Building Code.

4. All equipment shall be provided with lugs or brackets to allow the equipment to be firmly fastened to the structure. The lugs and brackets shall be sized to withstand the expected seismic and wind loads for the area and type of application. Location of the attachments shall be based on the equipment being hung or base mounted as shown on the Drawings and the schedules.

5. Design of hangers, supports, anchors and hold downs shall include the effect of all loads applied to the equipment, pipe or duct as well as the load of the component. These loads include, but are not limited to wind, seismic and internal dirt or liquid buildup.

6. Provide Type 316 stainless steel hanger rods, hangers, supplementary steel, anchors and guides in areas classified as corrosive, wet, and in outdoor exposed applications. This applies to the Pump Area.

B. Hangers and Suspension

1. Furnish and install all miscellaneous metalwork in accordance with Division 5 requirements.

2. Where C-clamp type hangers are used, furnish with a retainer strap.

3. Hangers shall not be supported from roof decking or bulb tees. Where required, provide supplemental steel to span between the building structures.

4. All piping supported at a maximum of 10-ft-0-in intervals. Hangers or rings, sized to fit outside the insulation.

5. All piping 2-in diameter and smaller supported by pipe rings or bands with one 3/8-in adjustable steel rod hanger and one concrete insert.

6. Anchor piping mains where indicated or wherever necessary to limit pipe expansion and to prevent vibration. Furnish anchors constructed of steel securely bolted to masonry and welded to pipes.

7. Rectangular, Round and Flat-Oval Ductwork - Spacing and size of hangers shall be as called for in the SMACNA standards, except as detailed below:
   a. Rectangular ductwork 48-in wide and larger shall be supported by two adjustable threaded rods.
   b. The following methods of hanger attachment to the building structure are NOT allowed. The numbers and letters refer to hanger methods shown in Figure 4-1, 4-2 and 4-3 of the 1985 edition of the HVAC Duct Construction Standards Metal and Flexible as published by SMACNA.
      1) "T" wrap around straps of open web joist.
      2) "W" bent over band on open web joist.
      3) "14" Friction clamps
      4) "17" Bent wire in metal deck.
8. All hanger and fastener material shall be of same finish as ductwork which they serve, e.g., galvanized, aluminum, black steel, etc. When a material other than the duct construction material must be used, the material used must be as corrosion resistant or greater than the duct material.

9. Perforated band iron or wire for supporting ducts shall not be permitted.

10. Support flexible duct by band hangers, 1-in wide minimum, attached so as not to crush the ductwork. The use of wire to hang flexible ductwork shall not be permitted.

11. Duct supports at flexible connections shall be adjustable.

2.08 PAINTING AND COATINGS

A. Unless otherwise specified, all machinery and factory finished equipment such as pumps, fans, air handling units, air conditioning units, and other items of manufacture shall be hot dipped galvanized or will have a factory applied finish, color as standard with the manufacturer. Components fabricated from stainless steel do not require a coating finish unless otherwise specified. All tanks, supporting steel, hangers, rods and all other uncoated or non galvanized steel other than standard piping and fittings shall have a shop coat consisting of a suitable primer and finish coat. If not factory applied, the prime coat shall be as specified in Division 9. All items not factory or shop primed prior to installation shall be suitably cleaned of rust and mill scale by wire brushing, sanding, or other means and prime painted, immediately after installation.

B. The Contractor shall be responsible for the repair of all defects, blemishes, holidays and the like apparent in manufactures coatings and shall ensure that the materials used for such repair shall match and be compatible with the manufacturer's standard color, coatings and practices. Surfaces to be repaired or recoated are to be prepared as recommended by the paint or coating supplier. Care shall be taken not to paint over nameplates.

C. Furnish touch up paint for the various types of equipment furnished and deliver unopened paint to the Owner at completion of the project. The amount of touch-up paint supplied shall be sufficient to cover 15 percent of the applicable painted surfaces or one pint, whichever is greater.

D. Where specified, or called for on the following schedule, special corrosion resistant/protective coatings shall be provided. Whenever a protective coating is specified, the equipment shall be coated both inside and out. Whenever necessary to provide full coverage of the equipment, the equipment shall be completely disassembled to allow proper preparation and coating application. Any component that would block the coating process shall be removed. Equipment provided with gaskets or liners shall be coated before the application of the gasketing or liner. The equipment Vendor shall test rotating equipment after coating to confirm dynamic balance. If work needs to be done to correct the equipment balance, the integrity of the coating must be corrected after such work.

E. Ductwork connections to units that require corrosion resistant coatings shall be made with flanges. Flanges shall be factory drilled before coating. Resilient washers suitable for the environment shall be used to protect the coating from the bolts in the flange. The use of self-tapping screws or other fastening methods that will damage the coating are not acceptable.

F. All items to be provided with a protective coating shall have the following data on the coating included with the unit submittal. Submittal shall include vendor data sheets on the specific coating being used, corrosion resistance data sheets, detailed application data sheets to include surface preparation procedures. For baked coatings submit a letter from the coating manufacturer, that the company doing the actual coating operation is an approved coating company. When an equipment supplier provides the coating, the information shall be supplied by the coating manufacturers.

G. Coil coatings, associated refrigerant piping and refrigerant circuit components within the AHU and Condensing unit cabinets shall be applied by Bronz-Glow Technologies Inc.. All field piping is to be coated with Bronz-Glow Technologies Inc. aerosol Platinum color. No other coatings acceptable.

H. Inspection and Preparation of Coil prior to Cleaning and Coating

1. Coil shall be inspected for fin damage. Bent fins shall be straightened using the proper fitting fin comb. Tubes and tube "U" bends shall be inspected for dents, punctures or pinched areas. Where possible, and with equipment manufacturer's approval bent, punctured, pinched tube or "U" bend areas shall be repaired and leak tested by coating vendor's A/C technician prior to coating. Vendor shall securely seal all open tubes to prevent the infiltration of dirt, water, cleaning and coating solutions into the tube. The header tube shall be fitted with a Schrader valve and the coil placed under no less than 5 and no greater than 50 psi nitrogen blanket throughout the cleaning and coating process. The charge shall be recorded and verified following coating to ensure the coil was not damaged allowing cleaning or coating solutions to infiltrate the tube side.

I. Cleaning and Conditioning of the Coil Fin and Tube Surfaces Prior to Coating

1. Following initial preparation of the coil, the coil shall be thoroughly cleaned using a non-etching and non-oxidizing detergent solution having less than 10- ppm chlorides, and formulated for use on ferrous and non-ferrous metals to remove shop soils, dirt, grease and oils from the surface of the coil fins, tubes and casings. Following the detergent cleaning the coil shall be thoroughly rinsed using clean filtered water to flush off soils removed by the detergent. The surface to be water break free when rinsed ensuring a clean surface. A non-oxidizing chemical solution sealer shall then be applied to enhance adhesion and provide secondary corrosion protection. The coil shall then be dried at temperatures up to 220 degrees F until thoroughly dry prior to applying the coating.

J. Coatings shall be of the following types:

1. MANUFACTURER STANDARD COATINGS
   a. Coating material shall be manufacturer's standard as specified in the schedule below. Surfaces shall be prepared, primed and coated as required be the coating supplier. Heat curing shall be provided where required by the coating supplier.

2. BAKED PHENOLIC (for heat transfer coils, dipped)
   a. Coating material Husky Coil Coat and Husky E-Vap Coat from Bronz-Glow. Coil shall receive corrosion protection treatment from a qualified coating vendor through application of vendor's in-house dip coating process. The coating material applied by this process shall have passed a minimum 3,500 hours salt spray test in accordance with ASTM B-117.85. Coating solution shall provide effective corrosion protection throughout the entire pH range of 1.0 to 14.0. Coating material shall consist of a synthetic polyelastomer material having properties of a minimum 5,000 psi tensile strength, 400% or greater flexibility, 250% or greater elasticity to prevent chipping, cracking or flaking, have negligible (less than ½ of 1%) effect on heat transfer coefficients, coating shall contain a UV inhibitor rating at 10 year Florida sun protection and coating shall be of a type that can be repaired in the field in the event of damage to the coating. The protective coating shall be applied by dip application (complete immersion) of the coil into the coating solution. Following curing of the coating the dry mill thickness of the coating shall be not less than 1 or greater than 1½ dry mills. Following dip coating the coil fin edges shall be sprayed to enhance fin edge coverage then the coating shall be cured at temperature of not greater than 200°F until fully cured.

K. Coatings shall be factory applied by the equipment manufacturer/supplier. If this is not possible, coating shall be applied by a specialty shop under contract to the equipment manufacturer/supplier.

1. Corrosion protection shall be provided, by an authorized coating vendor for each applicable unit component as specified herein. A "Certificate of Coating Compliance" shall be issued by the coating vendor verifying use of the specified products and processes. Coating vendor shall supply owner a written "Owner's Coated Coil Cleaning Service and Maintenance Manual". The afore mentioned certificate and manual shall be submitted upon completion of the project with all other closing documents.

2. Prior to shipment or installation of a coil into a cabinet coil shall be pressure tested to 110% of operating pressure and held for 45 minutes to ensure no leaks have occurred. Coil shall then be evacuated and placed under nitrogen blanket or installed in the cabinet.

3. When coil is being shipped as a single unit vendor shall protect coil tubes from soil or moisture infiltration by shipping coil under a nitrogen blanket of not less than 5 psi on the fluid side. Coil shall be tagged advising coil is under nitrogen blanket and psi rating of the nitrogen blanket.

4. Following installation of coil into the cabinet coating vendor's a/c technician shall place coil under a 200-400 micron vacuum to ensure integrity of coil and absence of moisture within the coil.

5. Coil shall be issued a registration number and number shall be affixed to the coil by means of a non-removable polymer seal. Coating vendor shall maintain a job warranty file for each coil coated for the period of the warranty.

6. After coating application is completed, the equipment manufacturer/supplier shall test the equipment and certify system operation prior to releasing the equipment to the job site.

L. Any holidays, runs, sags, blisters, or inclusions in the coating are unacceptable and will be corrected. With the approval of the engineer, small areas no more than 4-in by 4-in may be corrected in the field. Larger faults shall be returned to the coater to be repaired. The faulty material shall be removed by sanding and in the case of blisters, the edges feathered. The material used for recoating shall be manufactured by the same manufacturer as the original coating and shall be suitable for field repairs. The touch up material shall have the same corrosion resistance as the original coating, and if the original coating required an ultraviolet protection, the same protection will be provided as part of the repair. The final mil thickness of the repaired coating shall be equal to the originally specified thickness. Where baked coatings have been damaged, the repair shall be made with heat applied to the repaired surface to cure the coating. After curing a solvent test as recommended by the manufacturer shall be used to confirm that the coating is cured.

M. The coating manufacturer shall supply direct to the engineer, a set of coupons showing the final appearance of the cured coatings. Any coating that does not match the supplied coupons will be rejected.

2.09 TESTING, ADJUSTING AND BALANCING

A. Furnish the services of an AABC or NEBB certified agency for the testing, adjusting and balancing of all HVAC air systems installed under this Section.

B. The testing, adjusting and balancing agency shall be independent of all suppliers, installers and contractors on the project.

C. Refer to Section 15990 Testing, Adjusting, and Balancing for additional requirements.

2.10 INSULATION

A. Provide insulation adhesives, coatings and vapor barrier materials, which are compatible and recommended, for use by the insulation manufacturer. Submit a certified statement from the insulation manufacturer attesting to their approval of the adhesives, coatings, and vapor barrier materials. The following adhesives and coatings, as manufactured by Foster Div.; H.B. Fuller Co. or Childers Products Co. are representative of approved products that meet the above requirements. (Other manufacturers who demonstrate to the Engineer that their products are equivalent are acceptable.)

1. Lagging adhesive: 30-36, CP50, AMV-1.
2. Vapor barrier coating: 30-35, CP30.
3. Vaporseal adhesive: 85-75, CP82.
4. Duct adhesive: 85-20, CP82.
5. Sealing compound adhesive: 30-45, CP70.
6. Weatherproof mastic: 35-01, CP10-1.

B. Closed cell foam type insulation applications include, but are not limited to:

1. Refrigerant Piping – Suction Lines
   a. Insulation Material - Preformed flexible closed cell foam pipe insulation, minimum density 5.5 lbs/cu ft, maximum "K" factor of 0.27 at 75 degrees F mean temperature.
   b. Provide a field applied 0.016-inch aluminum jacket secured with stainless steel straps for all piping.
2. Condensate Drain Piping – Air Conditioners
   a. Insulation Material - Preformed flexible closed cell foam pipe insulation, minimum density 5.5 lbs/cu ft, maximum "K" factor of 0.27 at 75 degrees F mean temperature.
   b. Provide a field applied 0.016-inch aluminum jacket secured with stainless steel straps for all piping.
3. Acceptable manufacturers shall be Armstrong Corp; Manville Corp.; or equal.

C. Blanket type duct insulation shall include but not be limited to the following:

1. Concealed round and rectangular single wall ductwork.
2. Exposed round single wall ductwork.
   a. Insulation Material - Fibrous glass insulation, minimum density 1 lb/cu ft and a maximum "K" factor of 0.29 at 75 degrees F mean temperature.
   b. Facing - Factory applied vapor barrier 0.10 perm consisting of glass fiber scrim reinforced laminated facing of 2 mil aluminum foil and kraft paper.

D. Fiberglass board type insulation shall include but not be limited to the following:

1. Exposed rectangular single wall ductwork and plenums.
   a. Insulation Material - Fibrous glass insulation, minimum density 3 lbs/cu ft and a maximum "K" factor of 0.24 at 75 degrees F mean temperature.
   b. Facing - Factory applied vapor barrier 0.02 perm, consisting of glass fiber scrim reinforced laminated facing of 2 mil aluminum foil and kraft paper.

2.11 PIPE AND FITTINGS

A. Condensate Drains

1. Pipe - Copper tube ANSI H23.1 Type K or ANSI H23.6 Type DWV hard drawn. Fittings - Soldered cast brass or wrought copper drainage fittings ANSI B16.29.
2. Solder - 95 percent tin and 5 percent antimony per ASTM B32, Alloy 95TA.

B. Refrigerant Piping

1. Pipe - Type ACR copper, precleaned, inert gas filled, and capped. Fittings - Soldered wrought copper.

2. Solder - Hard silver solder with a minimum melting point of 1,300 degrees F. Fit up and solder joints while using an inert gas purge.

3. Refrigerant piping will be supplied with sight glass on the liquid line.

2.12 AIR HANDLING UNITS

A. In general, all air handling units, package, thru the wall type and split systems shall be factory assembled with cabinet fan, heating and/or cooling section, filters, dampers, access sections with hinged access doors, motor, motor base, drive, drive guard and vibration isolators.

1. Units shall be designed to provide an integrated assembly when all of the components are assembled. All transition sections and filler pieces required between sections are to be provided as part of the unit.

2. Support brackets or rails are to be provided with the unit. Type of support is to be as required by the schedules and as shown on the Drawings, e.g. hung, floor mounted, etc. All air handling units shall be provided with lugs, brackets or field supplied devices to allow the unit to be firmly bolted to the structure or fastened to specified vibration isolators. The lugs, brackets or field supplied devices shall be sized to withstand the expected seismic loads for the area and type of application. Location of the attachments shall be based on the equipment being hung or base mounted as shown on the Drawings and the schedules.

3. Units not mounted on vibration isolators shall have all rotating components internally isolated from the main unit with vibration isolators.

4. Ductwork connections to units that require corrosion resistant coatings shall be made with flanges. Flanges shall be factory drilled before coating. Resilient washers suitable for the environment shall be used to protect the coating from the bolts in the flange. The

use of self tapping screws or other fastening methods that will damage the coating are not acceptable.

B. Casings

1. Casings shall be galvanized sheet steel construction with structural framing members as required. Pressure class rating shall be for the total fan static pressure. All sections of the unit shall be of the same pressure class.

2. The housing shall be constructed of formed and reinforced metal panels, fabricated to allow removal for access to internal parts and components, with joints between sections sealed and continuous seam welded corners. Unit shall be double-wall construction with insulation sandwiched between the panels. Provide with structural framing as required. Interior of unit shall be flush with no internal standing seams or framing extending into the air stream. Seal all seams with high performance polyurethane sealant. Materials of construction shall be as called for in the schedules. The housing shall be coated internally and externally with a gray polyurethane enamel for corrosion resistance. Pressure class rating shall be for the total fan static pressure. All sections of the unit shall be of the same pressure class.

3. Where specified on the schedules, and in all units with heating and/or cooling sections, the unit shall be insulated. All sections including, but not limited to, return plenum, coils, filter, spacers, access sections, fan cabinet, mixing box and by-pass sections, shall be insulated. Insulation shall be 1-in mat faced or neoprene coated fiberglass liner, 1-1/2 pound minimum density, installed with stick clips and adhesives to prevent erosion of the insulation.

4. Provide gasketed access doors for servicing all components. Access doors shall have a positive-pressure locking latch to provide an airtight seal. Bolts, nuts and shafts for door latches, handles and hinges shall be stainless steel.

5. Where suspended from structure, horizontal units shall be supported on channel supports or provided with brackets.

6. Holes shall be provided in the base rails for rigging shackles to facilitate overhead rigging and forklift slots shall be provided to facilitate maneuvering.

7. Units for outdoor installation shall comply with the following:
   a. Materials of construction shall be corrosion resistant, or provided with a corrosion resistant coating system for weather protection.
   b. The casing shall enclose all components for weather protection, with gasketed access doors provided for all sections to facilitate maintenance. Doors shall have provision for key locking to prevent unauthorized tampering.
   c. Top of housing shall be constructed to prevent buckling and ponding of water.

C. Fan Section

1. Fans shall be centrifugal cabinet fans with belt or direct drive as scheduled. Extended external lubrication fittings shall be provided.

2. On belt driven fans, mount motor on an adjustable slide base, equipped with jack screws.

3. Where scheduled, backwardly curved wheels shall be air foil type.

4. All fans shall be statically and dynamically balanced before shipment.

5. Whenever possible, fans shall be AMCA certified for sound and air performance, per AMCA 210-85 and AMCA 330-86.

6. Where called for on the schedules, fans shall be of spark resistant construction. On spark resistant fans, bearings shall not be placed in the air stream. Construction shall conform to AMCA 99-0401-82 Classification.

7. Fan bearings shall be furnished as specified elsewhere in this Section.

D. Cooling Section

1. Cooling coil section shall be insulated, and provided with with drain pan, coil support slide rails and coil closure plate. Coil mounting shall minimize air by-pass around the coil. Provide insulated drain pan with a corrosion resistant lining and drain connections on both ends of the drain pan.

2. Refrigerant cooling coils shall be cartridge type with copper tubes, aluminum fins, galvanized steel frame, copper suction header and distribution tubes. Fins shall be mechanically attached to the tubes. Coils shall be pressure and leak tested at 300 psig with air under water. Coils shall be certified per ARI Standard 410.

E. Heating Sections

1. Heating section shall be insulated. Where heating is provided by coils, coil support slide rails and closure plates shall be provided.

2. Location of heating sections, preheat and reheat, shall be as shown on the schedules or Drawings.

3. Electric Heating Coils
   a. Electric heating coils shall be open resistance heating type with coil and unit UL listed. Coils and coil controls shall meet NEC requirements. Coil frame shall be galvanized steel with vertical element supports. Elements shall be insulated from the supports with ceramic bushings.
   b. Factory wired controls shall be provided in the unit control panel. Panels shall include all safety controls and interlocks, step control relays and devices and terminal strip for remote wired devices. Step control sensors and step controller will be provided under the temperature control portion of the specification. Control voltage shall not exceed 120V.
   c. Electric heaters must comply with the latest NEC and UL requirements and shall include the following:
      1) Primary overtemperature, thermal cut-out (automatic reset).
      2) Secondary thermal protection (manual reset).
      3) Zero clearance construction. Maximum current of 48 Amps per circuit.
      4) Interlock between fan and heater control circuit.
      5) A disconnect switch at or within sight of magnetic contactors.

6) Factory dielectric test of electrical insulation.
7) Fusible links (heat limiters) for thermal protection will not be accepted.
8) All three phase duct heaters shall have balanced three phase circuits. Where duct heaters draw more than 48 Amps, each circuit must have fused or circuit breaker protection.
9) Pressure type minimum airflow switch.
10) The following built-in accessories and controls, in addition to the NEC and UL required safety controls, shall be housed in the terminal box, magnetic contactors for automatic temperature control, control circuit transformers and a fusible disconnect switch with visible break and external operating handle with direct linkage to disconnect switch.

F. Filters

1. See makeup and air handling unit schedules for filter types by unit.

2. Filter Box shall have tracks for the specified filter types, except roll filters, to allow filter replacement from either side. Sealing material shall be provided at tracks and ends to prevent air by-passing the filters.

3. Disposable Filters shall be framed filters, 1-in or 2-in thickness (as scheduled). Filter pressure drop for clean filters at 300 fpm face velocity shall be 0.2-in wg for 1-in thick and 0.15-in wg for 2-in thick filters. Filter shall have 30 to 35 percent efficiency on ASHRAE test standard 52-76. Manufacturers and type shall be American Air Filter Co., Am Air 300X; Farr Co., 30/30 Disposable or equal.

4. A total of three complete sets of filter media shall be provided for each unit.

G. Condensing Unit

1. Condensing unit shall consist of casing, compressor(s), refrigerant piping system, condenser, condenser fans and drives and factory wired controls and panel.

2. All rotating components shall be internally isolated with vibration isolators from the main unit.

3. Condensing unit for split systems shall be designed and constructed for mounting remote from its associated air handler with field fabricated interconnecting refrigerant piping, including associated specialties.

4. Refrigerant compressors shall be of the type, number, and capacity specified on the schedules. Compressors shall be provided with unloading or hot gas by-pass as required by the schedule. Compressor shall include suction strainer, crank case oil sight glass, oil strainer and oil heater and forced feed lubrication. Compressor controls shall include three-phase manual reset overload protection, hi-low refrigerant pressure cutout, manual reset low oil pressure cutout, non-cycle pump down relay. In addition multiple compressor units shall have a compressor sequence switch.

5. Air cooled condenser shall have propeller or centrifugal fans as shown on the schedules. Exposed fans shall be provided with fan guards. Coils shall have copper tubes, aluminum

fins, galvanized steel frame and copper headers. Fins shall be mechanically attached to the tubes. Coils shall be pressure and leak tested at 425 psig with air under water.

H. A complete refrigerant piping system shall be factory fabricated and installed in the unit. Each compressor shall be provided with a complete and independent refrigerant piping system.

1. Piping shall be Type K copper tubing with joints silver brazed. Brazing shall be done with an inert gas purge. Suction lines shall be insulated with closed cell foam insulation. Hot gas piping shall be insulated to protect personnel as required.

2. Valves shall be bronze body brazed connection and shall include compressor and condenser relief valves, condenser liquid line service valve, refrigerant charging valve, compressor discharge, suction service valves, liquid line solenoid and thermal expansion valve.

3. Complete refrigerant system shall be cleaned, leak tested and charged with refrigerant.

4. Size of field fabricated piping for split systems shall be determined by the equipment manufacturer.

I. Unit Control Panel

1. For split system units, factory wired control panel shall be furnished and mounted on the unit. Panels shall include all controls required in other sections and all safety controls and interlocks, heavy duty fused visible break disconnect, control devices, motor starters and terminal strip for remote wired devices. Control type and sequence shall be as specified in other related Sections or on the Drawings. Control voltage shall not exceed 120 Volts. A complete wiring diagram shall be permanently attached to the inside of the unit.

2. Furnish electric heater section controls as scheduled and in accordance with the controls specified under Electric Duct Heaters, elsewhere in this Section.

3. Where specific area classifications are called for or shown on the electrical drawings, all equipment and wiring shall be in conformance with the requirements for that classification.

4. The type of enclosure shall be as specified in Division 16.

J. Accessory Sections

1. Accessory sections shall be as shown on the Drawings and Schedules, and as required for the unit type.

2.13 DUCTWORK

A. Sheet metal ductwork shall be constructed of the materials specified using the gauges or thicknesses and reinforcing called for by SMACNA for the material specified. Unless otherwise specified, all components of duct systems shall be constructed of the same material as the ductwork. This is to include braces and turning vanes.

1. Aluminum ductwork shall be constructed of 3003H-14 alloy B&S Gauges.

2. Stainless steel ductwork shall be constructed of Type 316 stainless steel

B. Ductwork shall be constructed of the following materials and to the following standards:

System	Location	Static Pressure	Construction Material	SMACNA Standard
Supply	Electrical Room	±2-in WG	AL	M&F

Abbreviations

M&F - SMACNA HVAC Duct Construction Standards - 1st Ed. - Metal & Flexible

AL = Aluminum

C. Design of ductwork shall include all loads applied to the ductwork, in addition to the load of the duct. These loads include but are not limited to wind, snow and internal dirt or liquid buildup.

D. Construction

1. All ductwork shall be substantially built with joints and seams smooth on the inside and given a neat appearance on the outside. Inside surfaces and joints shall be smooth and free from pockets, burrs and projections. All joints shall be substantially air tight with laps made in the direction of air flow and no flanges projecting into the air stream. All changes in direction and duct transitions shall be shaped to permit the easiest possible air flow.

2. Pressure Classes
   a. Pressure classes for determination of sheet metal gauge and reinforcing shall be as defined by the latest issue of the SMACNA standards for duct construction.
   b. For ductwork with a static pressure higher than 2-in water gauge, pressure class shall be as shown on the Drawings. For ductwork with a static pressure 2-in water gauge or less pressure class shall be equal to the maximum pressure indicated for the fans or air handling units on the Schedules and the pressure class shall be the same for the entire length, including branches, of the specific duct system.

3. Rectangular Ductwork
   a. Ductwork shall be constructed as shown on the Drawings in accordance with the specified SMACNA Construction Standard, latest edition.
   b. Cross-breaking shall conform to SMACNA Standard. Cross-breaking shall be applied to the sheet metal between the standing seams or reinforcing angles. The center of the cross-break shall be of the required height to assure rigidity for each panel.
   c. All square elbows for rectangular ductwork shall be provided with turning vanes unless otherwise noted on the Drawings. Turning vanes shall be as detailed in the SMACNA Manual and or as shown on the Drawings.
   d. Alternate Construction (Rectangular Only) - Factory-fabricated joint systems may be offered as an alternate form of construction. The system offered shall meet all

requirements of SMACNA. Alternate joint systems shall be "Ductmate System" as manufactured by Ductmate Industries, Inc., installed in accordance with the manufacturer's recommendations. The system shall be sealed for zero leakage and angle attachment to the main duct section shall be by tack welding. The use of screws is not allowed.

4. Insulated Round Flexible Ducts
   a. Round flexible ducts shall comply with specified SMACNA Construction Standards and be constructed of corrugated ductile aluminum that can be bent and rebent by hand and is self-supporting. 1-in insulation shall be applied around the outside and be finished with a vinyl cover.
   b. Thermal conductivity of the insulation shall not exceed 0.27 BTU/hr/sq ft/1 degree F at 75 degree mean temperature. Duct shall be Class I, per UL 181.
   c. Maximum length shall be 5-ft. The remainder shall be galvanized sheet metal. Duct run shall be as short and straight as possible to minimize static resistance.

5. Volume Dampers
   a. Dampers shall be standard opposed or parallel multi-blade type on 2-in channel frame, flanged connection with external damper position indicator, manual adjustment, and position locking arrangement. Damper blades shall not exceed 6-in in width. Dampers shall be constructed of the same material as the ductwork, or of a material of equal corrosion resistance. Balancing and balancing/shutoff dampers shall be opposed blades and shutoff dampers shall be parallel blade.
   b. Locking quadrants shall have a positive method of holding the damper in its selected position such as a bolt through both the quadrant and the lever arm. Systems using springs or other devices that can vibrate loose are not acceptable.
   c. Where manual dampers are used for shut off service, dampers shall have a replaceable butyl rubber or bulb vinyl seals provided with the damper. Install seals along the top, bottom and sides of the frame and along each blade edge.

6. Access Doors
   a. Access doors shall be 24-in by 24-in minimum, except where the duct size is less than 26-in, where the largest door that will fit the duct will be used. Unhinged access panels are not acceptable, except where shown on the Drawings. Access doors shall be of the same material as the duct, pan type construction for metal ductwork, with smooth edges and fitted seals, constructed and installed for air-tight fit with ease of opening and closing. Doors shall be substantially butt hinged, with heavy sash locks and substantial door pulls. Door openings and door frames shall be reinforced with bar stock or angle. Where ductwork is installed with duct liner or exterior duct insulation, the access door shall be of the insulated type. Access doors may be factory fabricated. Where ductwork is constructed of aluminum or stainless steel, access door hardware shall be of similar material.

7. Fasteners
   a. Sheet metal screws, drive cleats, cinch bands and other fasteners shall be fabricated from materials with an equal of greater corrosion resistance than the ductwork in which they are installed. Where a material other than the duct material is used, it shall be approved by the Engineer before installation.

2.14 DIFFUSERS, REGISTERS, AND GRILLES

A. General

1. All diffusers, registers and grilles shall be of the shape, sizes, capacity and type as shown on the Drawings. Refer to the Air Distribution Device Schedule on the Drawings

2. On all duct openings that do not have a specific diffuser, register, grill or mesh covers, provided a wire mesh cover.

3. Finish – Unless, otherwise specified, diffusers, registers and grilles shall have the following finish. All diffusers, registers and grilles located in ceilings shall have a baked white enamel finish except where the ceiling system has an exposed aluminum support grid. Where the ceiling has an exposed aluminum support grid the diffusers, registers and grilles shall have a baked aluminum enamel finish. All diffusers, registers and grilles not located in ceilings shall have baked aluminum enamel finish.

B. Wire Mesh Covers

1. Where wire mesh covers are called for on the Drawings, the wire mesh and support frame shall be Type 316 stainless steel. Unless otherwise noted the wire mesh shall be 0.5-in mesh.

2. The wire mesh shall be contained in a metal frame. The mesh shall be firmly attached to the frame to prevent it being pulled out of the frame by casual contact. The frame shall be a minimum of 16 gauge sheet metal or the minimum gauge for a flange based on SMACNA, whichever is greater. The frame shall be on both sides of the mesh creating a sandwich with the mesh in the middle. Fastenings shall go through the frame on both sides of the cover.

2.15 GRAVITY HOODS

A. Gravity hoods shall be a factory-fabricated and assembled sheet metal housing. Air intake hoods shall have a pleasing contour and a minimum free area for the handling of outdoor air at a maximum of 500 fpm. Gravity hoods shall consist of a "dome" or "mushroom" head, a stack section and a base for mounting of the entire unit over a curbed roof opening. Gravity hoods shall be of substantial construction with rigid framing, bracing and supports. Gravity hoods shall be of all aluminum construction, low silhouette. All hoods shall be provided with bird screens of 1/2-in mesh, welded wire, galvanized. Hoods shall be of type, size and capacity as shown on the Drawings. Provide anti-condensation coating on internal surfaces.

B. Gravity Hoods - Acceptable equipment shall be FGR Series by Greenheck Fan Co., or equal.

2.16 ATC EQUIPMENT

A. Area Classification

1. Where specific area classifications are called for or shown on the electrical drawings, all equipment and wiring shall be in conformance with the requirements for that classification as specified in Division 16. Special attention shall be given to hazardous areas specifically "Class I Div. 1 Group D" and "Class I Div. 2 Group D" to comply with code requirements for equipment selection and installation procedures.

B. Room Thermostats

1. Electric room thermostat shall be of the heavy duty all metal type, provided with concealed adjustment and exposed thermometer.

2. Temperature sensors shall be of the wire-wound resistive element type (RTD) using either nickel or platinum alloy as the resistive element. All temperature sensors shall have an end to end (element to readout display) accuracy of plus or minus 0.5 degree F.

3. Room thermostat and temperature sensors mounted on exterior walls shall be provided with insulated mounting plates.

4. All room thermostats and sensors shall be mounted 5-ft-6-in above finish floor except where otherwise indicated on the Drawings or specified herein.

5. Electric thermostats in corrosive areas shall be installed in electric boxes with remote stainless steel bulbs.

C. Photo Electric Type Smoke Detectors (Four Wire Type)

1. Furnish and install photo electric type smoke duct detectors in the supply air/make-up air duct and return air duct or plenum of each air handling unit and make-up air unit and in the exhaust air duct of exhaust systems where shown on the Drawings.

2. The detector housing shall be listed per UL 268A specifically for use in air handling systems. The detector shall operate at air velocities of 500 to 4000 feet per minute. The detector housing shall be equipped with an integral mounting base capable of accommodating either photo electronic or ionization detector heads. It shall be capable of local testing via remote testing station. The duct detector housing shall incorporate an airtight smoke chamber in compliance with UL 268A, Standard for Smoke Detectors for Duct Applications. The housing shall be capable of mounting to either rectangular or round ducts without brackets. An integral filter system shall be included to reduce dust and residue effects on detector and housing, thereby reducing maintenance and service.

3. Detectors shall be provided with two sets of contacts to provide smoke alarm signals. One is to be used by the ATC systems, and the second is for use in Division 16 for interface to fire alarm system.

4. Remote test switch and alarm indicator stations shall be furnished for all duct smoke detectors as specified above. The installation and wiring of the remote stations will be

provided under this Section. The remote test stations shall be wall mounted within the visible location of the smoke detector and easily accessible from the floor. Alarm indicator stations shall activate a visible and audible signal upon smoke detector activation. Alarm indicator stations shall also activate a visible or audible signal identified as AIR DUCT DETECTOR TROUBLE upon smoke detector trouble conditions. Alarm indicator stations shall be mounted in a location approved by the Authority having jurisdiction.

5. Provide all necessary relays, transformers and other devices as required.

6. Where multiple units serve the same space, the smoke detectors shall be wired such that any smoke detector will shut down all units serving the space.

D. Dampers

1. Automatic dampers shall be parallel or opposed blade as specified under "Sequence of Operation."

2. All damper frames are to be constructed of the same material as the duct or a material with greater corrosion resistance sheet metal and shall have flanges for duct mounting. Damper blades shall not exceed 6-in in width. All blades are to be of corrugated type construction, fabricated from two sheets metal, spot welded together. Blades are to be suitable for high velocity performance. Maximum blade length in any section shall be 48-in. Additional stiffening or bracing shall be provided for sections exceeding 48-in in height. Multi-section dampers shall be provided with sufficient interconnecting hardware to provide unison operation of blades in the entire assembly.

3. All damper bearings shall be made of nylon.

4. Replaceable butyl rubber or bulb vinyl seals are to be provided with the damper. Seals are to be installed along the top, bottom and sides of the frame and along each blade edge. Seals shall provide a tight closing, low (1 percent) maximum leakage damper.

5. Dampers shall be selected for the velocity and pressure differential required without excessive deflections.

6. Modulating dampers shall be of opposed blade construction. Dampers for two position operation may be single direction multiple-leaf type.

7. Dampers may be furnished for in duct mounting and with face linkages if the following conditions are met.
   a. Service is for supply or makeup air in either process or non-process areas or service is for return or exhaust of non-corrosive air.
   b. Space is available to install a 24 by 24 (minimum) access door in the duct on the linkage side of the damper.

8. Dampers shall be furnished for flange mounting with exposed jamb mounted blade linkages for any of the following applications:
   a. Where installation clearances do not allow the installation of full size access doors to allow inspection and adjustment of face linkages.
   b. For corrosive, dirty or particle laden air service.

c. Where called out on the Drawings.

E. Electronic Damper Actuators

1. Electronic actuators, less than 600 in-lb of rated torque, shall have ISO 9001 quality certification and be UL listed under standard 873, CSA C22.2 No. 24 and have CE certification. Electronic actuators used on dampers shall be designed to directly couple and mount to a stem, shaft or ISO style-mounting pad. Actuator mounting clamps shall be a V-bolt with a toothed V-clamp creating a cold weld, positive grip effect. Single point, bolt or single screw actuator type fastening techniques or direct-coupled actuators requiring field assembly of the universal clamp is not acceptable.

2. Actuators shall be fully modulating/proportional, pulse width, floating/tri-state, or two position as required and be factory or field selectable. Actuators shall have visual position indicators and shall operate in sequence with other devices if required. Proportional actuators shall be capable of digital communication, as built.

3. Two sets of DPDT switches with fully adjustable set points shall be provided to activate panel indicators and provide signals for equipment operation.

4. Actuator shall have an operating range of minus 22 to 122 degrees F.

5. Proportional actuators shall accept a 0 to 10 VDC or 0-20 mA input signal and provide a 2 to 10 VDC or 4-20 mA (with a load resistor) operating range.

6. Actuators shall be capable of operating on 24, 120 or 230 VAC or 24 VDC and Class 2 wiring as directed by the application. Power consumption shall not exceed 10 VA for AC, including 120 VAC actuators and 8 watts per actuator for applications.

7. NEMA 2 rated actuators shall be provided with a three foot (minimum), prewired, electrical cable. Actuators requiring removal of the actuator cover for access to wiring terminals, exposing electronics, printed circuit boards to damage, are unacceptable.

8. Actuators shall have electronic overload protection or digital rotation sensing circuitry to prevent actuator damage throughout the entire rotation. End switches to deactivate the actuator at the end of rotation or magnetic clutches are not acceptable.

9. For power-failure/safety applications, an internal mechanical spring return mechanism shall be built into the actuator housing. Spring return actuators shall be capable of CW or CCW mounting orientation. Spring return models >60 in-lb will be capable of mounting on shafts up to 1.05-in diameter. Spring return actuators with more than 60 in-lb of torque shall have a manual override metal crank. Upon loss of control signal, a proportional actuator shall fail open or closed based on the minimum control signal. Upon loss of power, a non-spring return actuator shall maintain the last position.

10. Actuators using “on-board” chemical storage systems, capacitors or other “on-board” non-mechanical forms of fail-safe operation are unacceptable.

11. Actuators shall be capable of being mechanically and electrically paralleled to increase torque if required. Dampers requiring greater torque or higher close off may be assembled with multiple low torque actuators. Dual mounted actuators using additional anti-rotation

strap mechanical linkages or special factory wiring to function are not acceptable. Actuators in a tandem pair must be "off the shelf" standard actuators ready for field wiring.

12. Dampers actuators will not produce more than 62 dbA when furnished with a mechanical fail-safe spring. Non-spring return actuators shall conform to a maximum noise rating of 45 dbA with power on or in the running or driving mode.

13. Proportional actuators shall be fully programmable. Control input, position feedback and running time shall be factory or field programmable. Diagnostic feedback shall provide indications of hunting or oscillation, mechanical overload, mechanical travel and mechanical load limit. The actuators shall also provide actuator service data, at a minimum, number of hours powered and number of hours in motion.

14. Where special classifications are shown on the electrical drawings damper actuators shall be provided with suitable enclosures.

15. NEMA 4X enclosures shall be Type 304 stainless steel and shall have a shaft seal and all electrical connections shall be suitable for the space classification. Enclosure shall be UL listed.

16. Explosion-proof enclosure shall be suitable for Class I, II and III. A suitable shaft seal must be provided. Housing shall be cast copper fill aluminum with stainless steel fasteners and shall be UL listed. Housing shall be suitable for NEMA 4, 7 and 9.

F. Local ATC Panels

1. Where shown on the Drawings or required by the control sequence, provide local ATC panels.
2. All controllers, relays, switches, etc, for equipment shall be mounted within ATC cabinets with hinge lock type doors where shown on the Drawings. All temperature settings, adjustments and calibrations shall be made at the system control panel.

3. Submit details of each ATC panel for approval prior to fabrication. Locations of each panel are to be convenient for adjustment and service. Provide engraved nameplates beneath each panel mounted control device clearly describing the function of said device and range of operation. All manual switches and dial thermometers shall be flush mounted on the hinged door, with permanent labels showing the function of each item. All other devices shall be located within the cabinet mounted to a sub panel.

4. All electrical devices within the panels shall be factory pre-wired to a numbered terminal strip. All wiring within the panel shall be in accordance with NEMA and UL standards and shall meet all local codes.

5. Unless otherwise specified herein or shown on the Drawings, control panels shall meet the requirements for Electrical Products specified elsewhere in this Section.

6. Electrical power supplied to automatic temperature control panels shall be 120V, single phase, 60Hz. Where 24V power is required, a 120/24 transformer shall be provided. The transformers shall be sized for their control system electrical loads. Transformers shall be mounted in the local control panel.

7. Provide an 110V power receptacle in each panel.

8. Provide a copy of the wiring and control diagram for all work in each panel. The diagram is to be stored in a pocket on the door.

G. Miscellaneous Devices - Provide all the necessary relays, limit switches, positioners, clocks, transformers, etc, to make a complete and operable system. Locate these devices on local ATC panel unless specified otherwise.

H. Name Tags - All sensing devices, transmitters, controllers, not mounted in a clearly labeled panel, or which are not an obvious part of a clearly labeled device, shall be provided with an engraved plastic plate containing the name, function and system or system number for the device.

I. Set points on thermostats and temperature controllers, shown on the Drawings are indicative only and devices shall be adjustable above and below such set points. If a set point is not stated, the control range of devices shall be suitable for the intended service. Range of devices shall be approximately 50 percent greater in both directions than span of variable, with a minimum of 25 degrees and a maximum of 110 degrees F for air systems.

J. Short Cycle Timers - Timers shall be electric operated with two sets of normally open, normally closed contacts with manual time adjustment from 1 to 15 minutes.

K. Break Glass Switches

1. Break glass switch enclosures shall be made from corrosion resistant fiberglass reinforced polyester. The enclosure cover shall be gasketed and fasteners shall be Type 316 stainless steel. The hammer shall be attached to the side of the enclosure with an 11-in chain. The unit shall be the automatic type that when the glass is broken, the alarm circuit shall activate. The alarm circuit shall consist of one NO and one NC Contact. The front of the enclosure shall be labeled “VENTILATION SYSTEM, EMERGENCY SHUTOFF”,

2. Units shall be 8146/552 as manufactured by Killark Electrical Manufacturing Company, or equal.

L. Flow Sensors

1. Flow sensors shall be thermal dispersion type sensors using a heated and RTD sensor probe to define flow. Housing shall be aluminum construction NEMA 4X and all parts of the sensor in contact with the measured air stream shall be Type 316 stainless steel. Units shall be powered by 120 Volt, single phase, 60 Hz power taken from the control panel. The unit set point shall be field adjustable and shall have a field configurable power supply of 24 VDC, 115 VAC, or 240 VAC. Flow sensors shall be Model FLT 9 3B manufactured by Fluid Components, Inc San Marcos, CA or equal. Each duct airflow sensor for system status shall provide flow indication by LED and activate two SPDT 6 amp dry contacts located in its respective control panel for status indication. Provide panel indicator lights for system “normal” and “failure” status indication and provide “failure” annunciation. The flow sensor shall have a built in calibration circuit for testing and calibrating the flow sensors. Sensor alarm points shall be set after the system has been balanced.

M. Field Wiring

1. All field wiring, other than power wiring, between control cabinets (A.T.C. control), control devices, unitary control panels and control terminals in motor control centers shall be furnished under this Section and shall conform to the requirements of Division 16.

2. 120V line voltage wiring to suspended and cabinet unit heaters and their thermostats shall be considered power wiring. All interlocking wiring within MCC shall be installed under Division 16.

3. Refer to the electrical drawings for NEMA enclosure types, other than NEMA 1, by room or location designation such as "Damp", "Wet", "Corrosive", "Class - Div. - Group -".

4. Installation of all conduit, wire, sleeves, outlet boxes, insulating bushings, system cabinets, terminal boxes, pull boxes, junction boxes, inserts, anchors, system devices, etc, shall be in accordance with the appropriate requirements of Division 16 and in accordance with the requirements of the current edition of the local codes for signal systems and electrical systems.

5. Run wiring in rigid steel conduit except in dry locations above ceilings and wood or metal stud framed partition walls, where EMT may be used. Conduit, boxes and fittings and their installation and testing shall be as specified in Section 16110.

6. Wire, with the exception of DDC cable and thermostat wire, shall be copper type THHN/THWN insulated for 600 Volts. Wire and its installation and testing shall be as specified in Section 16120.

7. In the event of any conflict among referenced codes, current editions of the applicable local codes shall take precedence for interpretation of "Signal System" installation requirements.

8. Installation of sensor wiring in finished areas shall be concealed whenever possible. Where concealed wiring is not possible, written approval for exposed work must be obtained from the Engineer prior to installation.

9. A power supply 115V, single phase, 60 Hz, 20 Amp circuit for ATC, requirements will be available at each local control panel. Power shall not be taken from the control power transformers of the motor control center.

10. Coordination Issues
    a. When motors are manually or automatically controlled from the HVAC ATC panels, the panels shall include a set of normally dry (unpowered) contacts (for connection to the motor started) which close when the motor is to operate. The ATC contractor will wire these contacts to the motor starter and make connections to the terminals provided. Contacts shall be rated 120 Volts, 10 Amperes, 60 Hz for inductive and resistive loads.
    b. A set of normally open dry (unpowered) contacts (for connection to the HVAC ATC panel) which close when the motor starter has pulled in, shall be provided under Section 16000. The ATC contractor will make connections to the terminals provided

and wire these contacts from the motor starter to the HVAC ATC panel to signal the motor is operating.

c. Line voltage thermostats will be furnished under this Section and installed and wired under Division 16.

d. The electrical contractor will provide a 120V circuit to all control panels shown on the Drawings. Power for the control systems is to be taken from the panels and no other source.

e. Alarms from the HVAC systems that provide a signal to the central control system will be furnished and installed under this Section. The alarms shall be provided with two sets of contacts. One set will be wired by the electrical contractor for the instrumentation system. The second contact will be used to provide an HVAC signal which will be wired under the Section.

f. The following wiring is to be done under this Section:
   1) Between ATC panels and MCCs.
   2) Between ATC panels and control panels on equipment provided by the HVAC contractor.
   3) Between alarm devices provided by the other trades and ATC panels.
   4) Power wiring from the ATC panels to smoke detectors and flow sensors.

g. Wiring from smoke detectors provided under this Section to the building fire alarm systems will be provided under Division 16.

h. Refer to electrical drawings for details of wiring at motor control panels. Provide all interconnecting wiring to start and stop motors.

2.17 SEQUENCE OF CONTROLS

A. General

1. HVAC equipment will operate with the following sequences of operation.
2. The following will apply to all sequences.
   a. All sequences are reversible unless otherwise noted.
   b. Manual reset of control functions with manual reset will be at the local control panel unless otherwise noted.
   c. Where required to prevent nuisance shut downs of systems, provide time delay of sensors to allow system start-up before the sensors are activated. This would include, but not be limited to, low temperature freeze protection on 100 percent outdoor air units and flow sensors on all systems.
   d. For fan systems with shut off dampers and air flows greater than 2000 cfm and fan operating static pressure greater than 1-in water gauge, fans shall be stopped and started by damper end switches. When the sequence calls for the fan to run, the control system shall open the respective damper. When the damper is open as indicated by an end switch on the damper the fan shall start.
   e. Where control sequences refer to activation of an alarm indicator, it will be understood to mean activation of a labeled pilot light at the local ATC panel. A dedicated pilot light will be provided for each alarm unless a common alarm light is specified.

B. ATC contractor shall coordinate with equipment supplier regarding control components. Control Sequences for Constant Volume Direct Expansion Units

1. Electrical Room Air Conditioning Unit with Space Thermostat Control
   Units AHU/ACCU-1

a. When the unit thermostat on/off switch is placed in the off position, the temperature controls shall be inactivated, the supply fan and condensing unit shall be off.
b. When the unit thermostat is placed in the on position and the system fan on/auto switch is in the on position, the temperature controls shall be activated, and the fan shall run continuously.
   1) When the space temperature sensed by the space thermostat is above the cooling set point, the condensing unit shall be on in cooling mode.
   2) When the space temperature sensed by the space thermostat is below the cooling set point, the condensing unit shall be off.
c. When the unit thermostat is placed in the on position and the system fan on/auto switch is in the auto position, the temperature controls shall be activated.
   1) When the space temperature sensed by the space thermostat is above the cooling set point, the condensing unit shall be on in cooling mode, and the supply fan shall be on.
   2) When the space temperature sensed by the space thermostat is below the cooling set point, the condensing unit shall be off, and the supply fan shall be off.
d. The space thermostat shall be a non-programmable digital thermostat and have an adjustable set point. The cooling set point for AHU-1 shall be 80°F.
e. Provide a space temperature sensor. Space temperature sensor shall have an adjustable high limit set point with an initial setting of 95°F. Sensor shall send a high space temperature alarm signal to the instrumentation system. See Electrical and Instrumentation drawings for additional details. Coordinate interface with instrumentation system supplier.

PART 3 EXECUTION

3.01 INSTALLATION

A. The Construction Contractor shall start up each piece of equipment and system and shall make all adjustments so that the system is placed in proper operating condition.

B. The Construction Contractor shall not install any equipment or materials until the Owner and Engineer have approved all submittals. If any equipment or materials are installed prior to approval of the submittals, it shall be at the Construction Contractor's risk.

C. Equipment

1. Install equipment in accordance with manufacturer's recommendation. Provide piping and ductwork connections in accordance with the requirements as specified elsewhere in this Section.

2. When units are shipped disassembled, field connect all sections together as shown on the Drawings to form single air handling unit. Seal all joints with gaskets and/or sealants.

3. Do not operate equipment without filters. Do not run equipment with dirty filter pressure drop more than twice clean filter pressure drop. A total of three complete sets of filters shall be provided. The first set is to be installed for start-up, test and balancing. The second set shall be installed after final cleanup and acceptance by the Owner. The third set shall be turned over to the Owner as a spare.

4. The Construction Contractor shall start up each piece of equipment and system and shall make all adjustments so that the system is placed in proper operating condition.

D. Insulation - General

1. Do not apply insulation prior to testing and acceptance of piping, ductwork and/or equipment. Insulation shall not be applied to damp or frosty surfaces. Clean dust, dirt, grease and moisture from surfaces of pipe and ducts before applying insulation or insulation adhesives. Install all insulation in a neat and workmanlike manner. Nameplates and equipment certification and data tags affixed to any piece of apparatus must remain exposed to view. Where two layers of insulation are used, stagger all joints both ways. Secure each layer independently. Continue insulation through walls, partitions, floors and pipe sleeves.

2. The recommendations and instructions of the manufacturers of products used in the work are hereby made part of this Section except as they may be superseded by other requirements of this Section.

3. Adhesives, coatings and vapor barrier materials shall be applied as specified by the manufacturer. Do not apply these materials when ambient temperature is above or below the maximum and minimum ambient temperature respectively, specified as limits by the manufacturer. In general, these limits are 90 degrees F and 40 degrees F, however, the limitations are to be checked for each product.

4. All penetrations through a vapor barrier for hangers, instruments, etc, shall be sealed to provide a complete vapor barrier. The use of staples or other fasteners that penetrate the vapor barrier shall not be permitted.

5. Insulation systems that require a vapor barrier shall be installed with an intact vapor barrier that covers the entire pipe, duct, or piece of equipment to be insulated. All edges of insulation that do not abut another piece of insulation shall have the vapor barrier extended, and sealed to the item being insulated. All penetrations through the insulation such as for thermowells, test ports, dampers, nameplates, or other items shall have the vapor barrier extend over the edges of the insulation and sealed to the item being insulated. Where items are mounted on ductwork a standoff shall be provided to protect the vapor barrier. The vapor barrier shall be sealed to the standoff.

6. For insulated items exceeding 100 square feet, or 20 feet in length, extend the vapor barrier to the item being insulated to reduce the area or length within a single enclosed area to the dimensions listed above.

E. Piping Insulation Cold Piping Closed Cell Foam

1. Apply insulation in thicknesses indicated. Joints shall be sealed using self-sealing seams or adhesive.

2. Fittings shall be covered with the same insulation, mitered to fit.

3. Installation - Apply insulation in the thickness indicated. Attach insulation to sheet metal duct. Joints shall be made to have compression fit with the joints sealed with adhesive. Manufacturer’s installation instructions shall be followed. Adhesives and coatings shall

be provided by the insulation manufacturer and shall be compatible with the insulation. Insulation shall be provided with a protective finish for outdoor use in accordance with manufacturer's recommendations.

Service	Pipe Size	Insulation Thickness
Refrigerant/Condensate Piping	All sizes	1 – in.

F. Ductwork Insulation

1. For purposes of insulation, flexible ductwork shall be treated as sheet metal ductwork.

2. Provide all cold ductwork with a vapor barrier. Where the method of attachment causes penetrations of the vapor barrier, seal such penetrations with vaporseal adhesive and vapor barrier tape.

3. Clips, pins, washers, staples, and other metal components shall be of the same material as the duct to be insulated. Where items of the same material are not available, a material of equal corrosion resistance may be used. If a different material of equal corrosion resistance is to be used, it must be approved by the Engineer.

4. All outside corners of ductwork in the traffic level shall be protected by sheet metal angles. Angles shall be 22 gauge galvanized steel with 2-in legs. When the duct is constructed of materials other than galvanized steel, the protective angle shall be fabricated of the same material as the duct, or of equal corrosion resistance. If a different material of equal corrosion resistance is to be used, it must be approved by the Engineer. Angles shall be attached to the outside of the vapor barrier with adhesive. The entire inside surface of the corner angle shall be coated with adhesive before being installed.

5. All joints in insulation shall be compressed 0.25-in. Corner insulation shall be lapped with the overlap extending over the full thickness of the insulation layers. Open spaces in joints are not acceptable. A minimum of two layers of insulation shall be used when the required insulation thickness is greater than 2-in. Joints in adjacent layers shall be staggered a minimum of 3-in.

6. All ductwork, except as specifically noted below, shall be insulated.

G. Ductwork Insulation - Blanket Type

1. Concealed Round and Rectangular Single Wall Ductwork and Exposed Round Single Wall Ductwork
   a. Installation - Apply insulation in the thickness listed below. Adhere insulation to the duct surface with adhesive applied in strips 6-in wide on 12-in centers. Butt all joints and lap jacket 2-in over adjoining jacket. Seal all lap joints with vaporseal adhesive and staples. For ducts 30-in wide and over, additionally support insulation on bottom of duct with rows of welded or adhesive clips and washers on 18-in centers. Seal penetrations, staples and terminations of vapor barrier with vapor barrier coating.
   b. Insulation Thickness - Concealed Round and Rectangular Single Wall Ductwork and Exposed Round Single Wall Ductwork.
      1) All ducts 2-in

H. Ductwork Insulation - Fiberglass Board Type

1. Exposed Rectangular Single Wall Ductwork and Plenums.
   a. Installation - Apply insulation in the thickness listed below. Fasten insulation to sheet metal duct with weld pins or approved adhered pins and clip washers. Place pins on 12-in centers located near edge of insulation and with a minimum of two rows per side. Impale insulation on pins. Attach clip washers so that they rest on the surface of the insulation without indent. Cut off pins flush with surface of washers. Seal penetrations with aluminum vapor barrier coating. Groove insulation to cover standing seams or stiffeners. Extend vapor barrier facing continuously over standing seams or stiffeners to provide continuous seal. Seal joints and edges with 4-in wide strip of factory furnished vapor barrier facing adhered with vapor barrier adhesive or approved vapor barrier duct sealing tape to provide a continuous vapor barrier.
   b. Insulation Thickness - Exposed Rectangular Single Wall Ductwork and Plenums.
      1) All ducts 2-in

I. Installation of Ductwork

1. Fabricate and erect all ductwork where shown on the Drawings, as specified herein and in accordance with SMACNA requirements. Rigidly support and secure ductwork in an approved manner. Install hangers plumb and securely suspended from supplementary steel or inserts in concrete slabs. Sufficiently thread lower ends of hanger rods to allow for adequate vertical adjustment. Do not use building siding and metal decking to hang ductwork.

2. Wherever ducts are divided, maintain the cross-sectional area. All such changes must be approved and installed as directed by the Engineer or as approved on shop or erection drawings.

3. During installation, close the open ends of ducts to prevent debris and dirt from entering. Install work in accordance with the overall approved progress schedule and in cooperation with all other trades so there will be no delay to other trades.

4. Provide the unused portion of external louvers (where it is not used as a fresh air intake or exhaust) with a blank-off constructed of 0.0625-in aluminum. Provide blank-off panels with aluminum reinforcing angles to prevent buckling and secured to the exterior wall with aluminum angles and rustproof fasteners on not more than 12-in centers. Provide caulking completely around the outside edge of the angle and the aluminum.

5. Install automatic dampers when supplied by other trades.

6. Cross-break sheet metal in accordance with SMACNA duct construction standard. Apply cross-breaking to the sheet metal between the standing seams or reinforcing angles. The center of the cross-break shall be of the required height to assure each panel section being rigid.

7. Cross-break steamlined ducts on top only and adequately brace internally.

8. Beading as specified in SMACNA will be acceptable in lieu of cross-breaking.

9. The Drawings of the air ducts and air risers show the general location for installation of the ducts and risers. Should additional offsets or changes in direction be made, these changes must be considered in the original bid and shall be installed at no additional cost to the Owner.

10. All necessary allowances and provisions shall be made in the installation of the ducts for the structural conditions of the building. Ducts shall be transformed or divided as may be required. Wherever this is necessary, maintain the cross-sectional area. All of these changes, however, must be approved and ducts installed as directed by the Engineer or as approved on shop or erection drawings.

11. The taper of all transformations shall be not more than 15 degrees.

12. Secure casing to curbs according to SMACNA Duct Construction Standards.

13. Provide baffle plates as required to prevent stratification and to provide proper operation of controls.

14. Where ducts are constructed of materials other than galvanized steel the reinforcing members shall be of the same material as the ductwork.

15. The use of button punching or snap locks on ductwork constructed of aluminum shall not be permitted.

J. Hangers

1. The use of wire to hang flexible ductwork shall not be permitted.

2. Ductwork shall not come in contact with any of the ceiling construction or any other equipment in the ceiling cavity.

K. Sealing of Ductwork

1. General – Unless, otherwise indicated, seal all ductwork joints and seams using sealant in accordance with the instructions of the sealant manufacturer and this Section. All transverse seams, joints and fitting connections, both shop and field assembled, shall be sealed in accordance with this Section. Not more than one longitudinal seam shall be unsealed in each section of duct.

2. Application of Sealant - Thoroughly clean all seams, joints, etc, of dirt, oil, grease, or other coatings which might interfere with the adhesion of the duct sealant before the sealant is applied.

3. Uncured sealant may be forced into the slotted side of the seam or joint before shop or field assembly, and the joint or seam completed while the sealant is still uncured. Excess sealant shall be removed from both the inside and outside of the duct before it sets.

4. Duct Tape - Use of duct tape alone for sealing ductwork is prohibited. Duct tape may be used primarily for the purpose of retaining the uncured duct sealant in seams and joints until it has cured. Duct tape shall not be applied to the inside of any duct nor shall it be

applied to standing type joints at any time. All duct tape used shall be compatible with the sealant.

5. Sealant shall be either in liquid form or a mastic with a maximum flame spread of 25 and a maximum smoke developed rating of 50 when tested in accordance with ASTM E84, NFPA 255 and UL 723.

6. Sealing systems shall be suitable for the environment. The following schedule is to be used to select the sealant.
   a. Indoor, dry galvanized round and rectangular duct is to be sealed with Iron Grip 601 or equal.
   b. Indoor, dry, stainless steel, aluminum and PVC coated is to be sealed with FTA 20 adhesive and DT-Tape gypsum or equal.
   c. All other areas unless otherwise noted are to be sealed with FTA 50 adhesive and DT-Tape gypsum or equal.
   d. All sealers listed or manufactured by Hardcast Inc. and are to define the type of sealer. Other equal sealants are acceptable.

L. Ductwork Fittings and Accessory Items

1. Duct Elbows - Rectangular ductwork where full radius elbows cannot be installed, provide abrupt elbows equipped with shop-installed hollow, air foil turning vanes.

2. Flexible Connectors
   a. Install flexible connectors at all duct connections to fans, fan units or blowers, air handling units and air conditioning units. Make connections substantially air tight at all seams and joints.
   b. Where the construction of the flexible connection or vibration isolator results in a cross sectional area of the connection which is less than 90 percent of the adjacent ductwork, the size of the connection shall be increased to provide a cross sectional area equal to or greater than 90 percent of the adjacent duct.
   c. Provide flexible duct connections at both the intake and discharge connections for all fans and air handling units except as noted below:
      1) Wall and roof fans that have integral motor/fan wheel isolation.
      2) Air handling units where the fan is isolated from the intake and discharge connections by internal flexible connections or separations, and the unit is mounted without vibration isolators between the unit and the support structure.

3. Dampers
   a. Install manual volume control dampers wherever it may be necessary to regulate air volume for system air balancing and where shown on the Drawings.
   b. Install splitter dampers, where shown on the Drawings, to regulate air volume for system air balancing. Splitter dampers shall be single blade, end pivoted type, manual adjustment and position locking arrangement.
   c. Factory-fabricated volume extractors shall be used at all supply air diffusers.
   d. An access door, of ample size to permit maintenance and resetting of damper blades, shall be installed at each opposed blade damper, splitter damper and volume extractor so located for easy access to the damper blades.

4. Access Doors
   a. Provide access doors at the following locations (minimum requirements):

1) Automatic dampers - linkage side.
2) Duct mounted temperature controllers.
3) Freeze-stats.
4) Fire dampers.
5) Smoke detectors.
6) Filter banks.

b. Where access doors are required in ductwork located above ceilings, coordinate the location of the access doors to clear the ceiling support system and to be accessible through the ceiling grid.

M. Grilles, Registers and Diffusers

1. The location of diffusers, registers and grilles shall be as shown on the Reflected Ceiling Plans. Where diffusers, registers and grilles are not located in the ceiling, there are no Reflected Ceiling Plans provided, the location shall be as shown on the ductwork drawings. The exact location of these devices shall be determined in the field in cooperation with the other trades.

2. Install all devices in an approved manner in accordance with the manufacturer's recommendation.

N. Flexible Ductwork

1. Make connections, joints and terminations air tight as recommended by the manufacturer. Where joints are made to rigid sheet metal ductwork, apply 3M Company EC-800 sealer and the joint shall be drawn tight with a drawband. Collars shall be 2-in long minimum and sleeves shall be 4-in long minimum.

2. Install flexible ducts with one duct diameter-radius elbows and cut as short as possible. Duct shall not be compressed and the length shall be kept short so minimum hangers or supports are required, and static pressure losses are kept to a minimum. Sag in flexible duct shall not exceed 1/2-in/ft between duct supports.

O. Filling in Space Around Ductwork

1. To prevent sound passing through the area between the duct and the framed or cut opening in the floors, walls or partitions, pack mineral wool to completely fill the space the full depth of the opening. Whenever a fire-rated wall or floor is penetrated, fill the space around the duct with a locally approved type of fireproof rope.

2. At firewalls, apply galvanized sheet metal escutcheon plates on both faces of the wall to close the gap between the structure and the sides of the insulated or bare duct.

P. Ductwork at Masonry

1. Where ducts connect to, or terminate at masonry openings, or along the edges of floors where concrete curbs are not being provided, place a continuous 2-1/2-in by 2-1/2-in by 3/16-in galvanized angle of the same material as the duct around the ductwork. Then bolt the angle to the construction and make airtight to same by applying caulking compound on the angle before it is drawn down tight to construction.

2. Fasten plenums to concrete curbs with 3-in by 3-in by 1/4-in thick continuous angle. Concrete curbs will be provided under another Division. This angle shall sit on a continuous bead of caulking compound and be anchored to the curb at 16-in centers. Terminate the sheet metal at the curb and bolt to the angle. Seal the sheet metal to the curb with a continuous bead of caulking compound.

3. When exposed ducts pass through finished floors, walls or ceilings, provide angle collars completely covering space around duct.

Q. Quality of Ductwork Installation

1. All ductwork shall be free from pulsation, chatter, vibration or objectionable noise. After system is in operation, should these defects appear, correct by removing, replacing or reinforcing the work. Sound levels shall not exceed the minimum requirement as specified in ASHRAE 1980 Systems Volume, page 35.16, Table 23. No discreet tones will be allowed.

2. The maximum allowable leakage of low pressure system shall be 5 percent of air volume.

R. Plenums

1. Seal fresh air inlet and exhaust air plenums at louvers or otherwise subject to weather entrainment watertight at all bottom joints and seams and up all vertical seams for a minimum of 12-in. After application, remove excess sealant before it sets hard. Where possible, pitch fresh air inlet and exhaust air plenums down towards the louver. Where it is not possible to pitch the plenum, provide a 1-in capped drain connection at the low point of the plenum.

S. Test Ports

1. Where shown on the Drawings and where required for testing and balancing, provide instrument insertion ports. Size and location of ports shall be coordinated with the Construction Contractor performing air balancing. Seal ports with plastic snap lock plugs. When the ductwork will be insulated, extend the port to the face of the insulation and seal the vapor barrier to the port. When the ductwork is lined, extend the port into the duct to the inner surface of the duct liner.

2. In round ductwork provide 2 ports 90 degrees on centers. In rectangular ductwork provide ports are required by AABC or NEBB for a full traverse measurement.

3. As a minimum, ports shall be provided in the following connections:
   a. All duct mains.
   b. All duct branches unless all connections are diffusers, registers, or grilles and the total can be calculated by summing the readings for all of the connections.
   c. All connections to tanks or hoods where there is no other access for taking a measurement.

4. A main duct is defined as one of the following:
   a. A duct serving five or more outlets.
   b. A duct serving two or more branch ducts.
   c. A duct emanating from a fan or plenum.

d. All remaining ducts are considered branch ducts.

T. Piping

1. Pipe and Fittings
   a. Install piping in a neat manner with lines straight and parallel or at right angles to walls or column lines and with risers plumb. Run piping so as to avoid passing through ductwork or directly under electric light outlets and/or interference with other lines or extending beyond furring lines as determined by Architectural Drawings. Accomplish all work using the best methods and procedures of recognized pipe fabrication in a good and workmanlike manner in accordance with the latest revision of applicable ANSI Standards, ASME Codes and PFI Standards.
   b. Cut pipe square, not upset, undersize or out of round. Carefully ream ends and clean before installing.
   c. Bending of pipe shall not be permitted. Use fittings for all changes in direction.
   d. Do not remove end caps on pre-cleaned pipe until immediately before assembly. Cap all open ends immediately after completion of installation.
   e. Thoroughly clean all piping interiors after installation and keep them clean by approved temporary closures on all openings until the system is put in service. Closures shall be suitable to withstand the hydrostatic test.

2. Soldering (Copper Tubing)
   a. After cutting, thoroughly clean all surfaces to be soldered to a metal-bright finish, free from dirt, grease or other material before fluxing and soldering. Perform this cleaning by using emery cloth, sandpaper or steel wool. Clean the outside end of the tubing for a length of 1/2-in greater than the depth of the fitting. Clean the inside of the fittings in a similar manner. Apply non-corrosive flux and assemble the joint. Acid solder or acid flux will not be accepted.
   b. Heat the surfaces to be joined slowly and uniformly to the melting point of the solder. Maintain the surface being soldered above the melting point of the solder for sufficient time to draw the solder completely into the joint. When the solder congeals to a plastic state, remove the excess metal with a cloth brush, leaving a fillet around the end of the fitting. Full penetration of the solder uniformly throughout the entire socket is required. Allow the soldered joints to cool in still air until only warm to the hand, after which the work may be quenched.
   c. Any type of crack, pinhole, area of incomplete penetration, or similar defect will not be accepted. Peening for closing up defects shall not be permitted.
   d. Use heating torches of sufficient size for heating of large fittings prior to soldering. Multiple tips or ring burners for use on combination torches may be used.
   e. Remove all external and internal loose solder and flux after joint cools.

3. Refrigerant Piping
   a. Before and during silver soldering refrigerant piping, purge the assembly of pipe and fittings with dry nitrogen, to avoid formation of oxidation scale on inside of pipe during soldering.
   b. Where specially prepared, Type R, cleaned or charged refrigerant piping is not available for equipment interconnection, with the Engineer's or Owner's Representative's approval, the following procedure must be completed. Clean the interior of field assembled refrigerant piping after joining in four steps as follows:
      1) Draw a clean lintless cloth through the piping to remove coarse dirt and dust.

2) Draw clean lintless trichlorethylene saturated cloth through the piping until cloth is not discolored with dirt.
3) Draw a clean cloth saturated with compressor oil through the piping.
4) Complete cleaning by drawing a clean, dry, lintless cloth through the piping.

c. Pressure test and charge immediately after cleaning.

3.02 FIELD TESTING

A. Testing and Balancing

1. General - Test, adjust and balance all HVAC systems. If required by the Engineer, tests shall be made during the progress of the work to demonstrate the strength, durability and fitness of the installation. Furnish all instruments, ladders, lubricants, test equipment and personnel required for the tests; including manufacturer's representatives for testing and start-up of all Construction Contractor supplied equipment. Before testing and balancing, all systems shall be cleaned as specified. Submit four copies of records of all tests, measurements, settings of throttling devices and nameplate data to the Engineer.

2. Final Tests - Perform tests of all systems as required by the Engineer prior to final acceptance of the systems for the purpose of demonstrating satisfactory functional and operating efficiency as well as adjustment. During this period, check the setting of all automatic controls and take sufficient measurements to ensure that conditions are correct and that capacities are adequate to meet the specified requirements. Systems will not be considered complete until all tests have been concluded to the satisfaction of the Engineer and all other parties having jurisdiction. In event of leakage or defects, repeat tests until all faults are corrected. Perform the general operating tests under as near design conditions as possible.

3. Perform all testing, adjusting and balancing under the supervision of a qualified heating, ventilating and air conditioning engineer employed by the air balance and testing agency. Reporting forms for testing and balancing shall be as recommended by the AABC or NEBB.

4. Coordination of the test shall be the responsibility of the balancing sub-contractor. Access to the site, availability of service representatives, and tenant acquiescence will be considered in the determination of both the testing schedule and the witnessed recheck of the balancing.

5. Refer to Section 15990 for additional requirements.

B. Piping Pressure Testing

1. Pipe Testing Procedure
   a. The equipment to which any piping system is attached shall not be subject to any line tests. Either remove or blank off items which may be damaged by the test pressure. The test pressures apply to the piping materials as specified, but shall not be assumed to apply to piping specialties, accessories, or equipment including safety heads, rupture discs, relief valves, expansion joints, instruments or filters.
   b. Prior to pressure testing, take the following precautions:
      1) Do not apply insulation over piping prior to completion of testing.

2) Lines containing check valves shall have the source of test pressure located on the upstream side. Set the control valves in the open position for the duration of the test.
3) Block up all piping supported by springs temporarily to a degree sufficient to sustain the test liquid load.

c. Test the piping system at the pressure indicated in the individual pipe material specification section or 1-1/2 times normal working pressure, whichever is greater for the respective systems. Leakage or loss of head will not be acceptable.

2. Condensate Drains Testing

Test Press.	Medium	Duration	Allowable Loss
10 Feet Column	Water	2 hrs	None
10 Inch Mercury	Air	15 min.	None

3. Refrigerant Piping Testing

Test Press.	Medium	Method
To suit Refrigerant used	Inert gas and refrigerant	Electronic leak detector

4. Following the completion of acceptable leak testing, evacuate and charge the completed refrigeration system in accordance with the manufacturer's recommendations.

3.03 START-UP AND TEMPORARY OPERATION

A. Properly maintain and service all equipment and systems until the particular equipment or the system has been accepted by the Owner.

3.04 BALANCING OF ROTATING EQUIPMENT

A. All machines shall be balanced both statically and dynamically by the manufacturer within the limits of best commercial practices. The term machine, as used above, is to be considered as any piece of equipment, which contains rotating components. All machines furnished shall have operating speed not exceeding 80 percent of the first critical speed.

3.05 PAINTING

A. The Construction Contractor shall be responsible for the repair of all defects, blemishes, holidays and the like apparent in manufacturer's coatings and shall ensure that materials used for such repair shall match or be compatible with the manufacturer's standard color, coatings and practices. Do not paint over nameplates.

3.06 ACCEPTANCE OF AUTOMATIC CONTROL SYSTEM

A. During the acceptance inspections, the manufacturer shall provide the required personnel to operate the system and show complete functionality. The manufacturer will also provide the required communication devices to allow simultaneous observations at multiple points. In general, each system will be run through its complete operating sequence.

B. Systems that are found to be operating incorrectly will be bypassed and not corrected during the inspection. If multiple systems are found to not be operating, the inspection will be canceled and rescheduled at the manufacturer's expense.

3.07 CLEANING

A. Leave all piping, ductwork and equipment in a thoroughly cleaned condition. Thoroughly flush all piping to remove all foreign materials prior to any cleaning procedure. All flushing and cleaning shall be to the satisfaction of the Engineer. Furnish, install and remove all temporary piping and equipment used in the cleaning and flushing operations.

B. Maintain all ductwork, fans, coils, air filters, outlets and other parts of the ductwork systems in a clean condition during installation.

C. Clean complete ductwork systems prior to testing and air balancing. Secure cheese cloth over all openings of the ductwork system for entrapment of dirt during the cleaning operation.

END OF SECTION

© 2019 CDM Smith
All Rights Reserved

THIS PAGE INTENTIONALLY LEFT BLANK

© 2019 CDM Smith
All Rights Reserved

SECTION 15600
FUEL SYSTEM

PART 1 GENERAL

1.01 SCOPE

A. The work of this section includes all labor, materials and equipment required for the installation and testing of the fuel and fuel piping systems complete and ready for operation.

1. The system will include a new 4,000 gallon above ground fuel storage tank and two new 2,000 gallon above ground fuel storage tanks as indicated on the drawings, a complete fuel piping system for the tanks and diesel driven pumps, fuel storage tank monitoring systems, concrete pad, and all accessories as indicated for each tank and fuel piping system. The systems will convey diesel fuel between the diesel driven pumps, generator, and the fuel storage tanks.

2. Refer to Section 15400 for additional requirements.

1.02 RELATED WORK

A. Related work specified in other sections:

1. Concrete work is included in Division 3.

2. Field painting is included in Division 9.

3. Electrical and Instrumentation work, except as otherwise specified herein, is included in Division 16.

1.03 REQUIREMENTS OF REGULATORY AGENCIES

A. All work shall conform to the applicable requirements of the city, county, state and federal codes. Where the requirements of such agencies are more stringent than specified herein, abide by such requirements and consider this specification as supplementary to those requirements.

B. The tank systems including coating and sealants must be accepted by the US Environmental Protection Agency. All work shall conform to the applicable requirements of the following: Federal Register and the Federal Resource Conservation Recovery Act law (RCRA).

C. All work shall conform to the applicable requirements of the following: National Fire Protection Association (NFPA) 30 - Flammable and Combustible Liquids Code, NFPA 321 - Basic Classification of Flammable and Combustible Liquids, and NFPA 37 - Standard for the Installation and Use of Stationary Combustion Engines and Gas Turbines.

D. All work shall conform to the applicable requirements of the following: Department of Environmental Protection, the Florida Building Code, and Local Ordinances.

E. The tank shall meet the current requirements of Underwriters Laboratories (UL) Standard 142 and UL 2085 and all requirements of the Florida Administrative Code 62-762. All components of the fuel distribution system shall be UL listed, unless otherwise specified, or approved by the Engineer.

F. The tank and fuel systems shall be designed and fabricated according to best practices and methods available to date.

G. Electrical Components, Devices, and Accessories shall be listed and labeled as defined in NFPA 70, Article 100, by a testing agency acceptable to authorities having jurisdiction, and marked for intended use.

1.04 QUALIFICATIONS

A. Installer shall have had supervisory experience with five similar fuel systems in the past three years and shall hold a valid pollution control contracting license if required by the State of Florida, Department of Environmental Protection or the local jurisdiction. A copy of the license shall be submitted to the Engineer and to the local authorities, prior to proceeding with construction. Written confirmation from the applicable authorities shall be provided to verify that a pollution control contracting license is not required.

B. Tank installers shall be certified in writing by the tank manufacturer as being qualified to install the equipment. A copy of the certificate shall be submitted, prior to proceeding with construction.

1.05 SUBMITTALS

A. Complete shop drawings shall be submitted, including certification of shop test to the Engineer for review, in accordance with Section 01300.

1. The shop drawings shall include sufficient information to demonstrate compliance with the specified tank design standards, including copies of applicable sections of the specified design standards, manufacturer's catalog data and descriptive literature for the tank, fully dimensioned shop layout drawing (1/4" = 1' scale or larger) showing all piping, manholes, valves, equipment connections, tank outline dimensions, platform and stair dimensions, nozzle locations and foundation requirements, recommended tank installation and test procedures.

2. The shop drawings for pipe, fittings, and each item listed in the Specifications shall include manufacturer's catalog data and descriptive literature, fully dimensioned shop layout drawing (1/4" = 1' scale or larger) showing all piping, manholes, valves, equipment connections, nozzle locations and installation clearance requirements.

3. Submit all manufacturer's recommended installation and test procedures for all equipment including tanks, piping, etc.

4. Submit manufacturer's Test Reports (vessel fabrication, coating integrity and tank leakage, etc) for each tank and specific service application.

5. Submit manufacturer's warranty for each tank, all fuel components, containment piping and specific service application.

6. Operation and Maintenance Manuals shall be submitted in accordance with Section 01730.

1.06 ENGINEERING SERVICES

A. When engineering services are specified to be provided by the Contractor, the Contractor shall retain a licensed professional engineer to perform the work. The engineer shall be licensed at the time the work is done and in the state in which the project is located. If the state issues discipline specific licenses, the engineer shall be licensed in the applicable discipline. In addition, the engineer shall be experienced in the type of work being provided.

B. All work is to be done according to the applicable regulations for professional engineers, to include signing, sealing and dating documents. When submittals are required by a professional engineer, in addition to state required signing and sealing, a copy of the current wallet card or wall certificate indicating the date of expiration shall be included with the submittal.

1.07 PRODUCT HANDLING

A. Deliver materials and equipment to project site in manufacturer's original, unopened containers with labels intact and legible. Labels shall indicate manufacturer's name and model number. Store equipment in dry protected area. All damaged items shall be replaced with new at no additional cost to Owner.

B. Piping shall be supplied to the site with sealed end caps which shall remain in place until installation. Tanks shall be delivered to the site with all openings sealed which shall remain in place until installation. The tanks shall be properly supported during transportation to the site and during installation in accordance with the manufacturer's instructions.

PART 2 PRODUCTS

2.01 ABOVEGROUND FUEL OIL STORAGE TANK AND ACCESSORIES

A. Rectangular Steel Storage Tank

1. Steel primary and steel secondary tanks shall be listed by UL as an aboveground tank for flammable and combustible liquids and manufactured in accordance with UL 142 and UL Standard 2085 with a two-hour fire rating.

2. The steel primary tank shall be fabricated from minimum 3/16-inch thick steel plate.

3. The tank shall be insulated for fire resistance and protected against ballistic and impact penetration.

4. Emergency Vent: as required by NFPA 30 with no size reduction allowed for insulation.

5. Normal Vent: independent of the emergency vent as required by NFPA 30.

6. Steel Tank Openings: threaded and located in the top of tank.

7. Steel Tank shall be provided with two (2) lugs for connecting ground conductors for lightning protection in accordance with NFPA 780.

8. Steel tank shall be pressure tested at the tank factory at 4 psi per UL 142.

9. Secondary steel tank shall be painted with a primer coat and finish coat of an industrial epoxy coating. The coating shall be impervious to diesel fuel, weather resistant, and UV protected.

10. Secondary containment shall be capable of unobstructed liquid and vapor monitoring. Containment space shall be vacuum or pressure tested pursuant to industry standard.

11. The interstitial space between inner and outer tanks shall be filled with light weight thermal insulation or reinforced concrete.

12. Leak detection shall be facilitated by a polyethylene membrane around the primary tank or porous fill material.

13. Integral steel supports shall be provided for the tank.

14. The tank shall have appropriate warning signs as required by the local and state jurisdictions.

15. Steel tank shall have an integral seven gallon UL listed spill containment system, as a part of the tank, with internal reservoir and normally closed UL listed drain port. Spill containment system shall be provided with water tight gaskets at all openings. This includes containment housing cover, fill port cover, drain valve, and stick port cover.

16. The tank shall be placed on reinforced concrete pad made to manufacturer's specifications.

17. Hurricane Restraints and Flood Restraints shall be designed and installed per the requirements of the Florida Building Code with Amendments. Design services shall be provided by a licensed Engineer as described in Paragraph 1.06. Signed and sealed calculations shall be submitted for record purposes.

18. The tank design shall have been in manufacturing production and commercial use for a minimum of five (5) years.

19. The tank shall be Envirovault as manufactured by Phoenix Products.

20. Tank sizes shall be (1) 4000 gallon and (2) 2000 gallons.

21. The fuel tanks shall be left 90 percent full of diesel fuel at the conclusion of the contract as part of the Contractor Scope of Services. Refer to Paragraph 3.05.D.

B. Tank Accessories

1. A mechanical level gauge system shall be provided to indicate the liquid level within the tank. The level gauge shall have a direct reading indicator mounted on top of the tank. The tank shall include all openings required for the level gauge system. Gauge shall be Krueger At-A-Glance Type D Direct Reading Gauge.

2. A mechanical leak gauge system shall be provided to indicate leaks in the annular/interstitial space of the double wall above ground fuel tank. The leak gauge shall have a direct reading indicator mounted on top of the tank. The tank shall include all openings required for the leak gauge system. Gauge shall be Krueger Type D Leak Detection Gauge.

3. Provide stairs with 24” x 24” platform at the top, to provide access to the top of the tank. Stairs shall have handrails on both sides and at all platform sides. Stairs shall be aluminum construction and painted with one coat of epoxy corrosion resistant paint, color to be selected by the Owner. Refer to the Drawings for required location of stairs for each tank.

4. The tank fabricator shall provide ports and accessories with the tank as shown on the drawings and listed below.

5. All ports shall be steel pipe with male threaded fittings.

6. All ports except for those with capped accessories shall be provided with threaded caps.

7. The following equipment shall be furnished along with the necessary piping and fittings required to provide a complete diesel fuel piping system.
   a. Vent piping shall be 3-inches.
   b. Vent cap shall be 3-inches and shall be constructed of aluminum with removable brass screen, EBW Model 800-203-01.
   c. A single poppet foot valve, EBW model 75-105-01 shall be installed inside the aboveground tank at the fuel intake line at a location 6” above the bottom of the tank.

C. Fuel Level/Leak Monitoring Equipment

1. General
   a. Furnish a complete electrical monitoring system and associated equipment including but not limited to tank alarm, tank level detection and real time monitoring, tank leak detection, and associated modules for the entire fuel level/leak detection system shown on the drawings and specified herein. The system shall be the Greenleaf Solar Gauge EFG-8000-I with EFC-420.1 4-20mA data converter. The system shall include provisions for remote monitoring of the alarm conditions, tank level detection, and tank leak detection including all required terminals, switches, and transmitters.
   b. The control unit shall be housed in a NEMA 4 equivalent plastic steel enclosure. All probes and sensors shall be rated for outdoor service.
   c. The control unit shall be solar powered with battery back-up.
   d. A minimum of four (4) programmable relay outputs shall be provided. At least one output shall be designated as a common system alarm/fault. The tank level shall be provided with a 4-20 mA outputs for level monitoring each tank at a remote monitoring PLC. Tank manufacturer shall coordinate with the Instrumentation System Supplier to provide all required signals for the Instrumentation System. Refer to instrumentation drawings for additional signal requirements.
   e. The supplier shall be responsible for coordinating and providing all necessary components for a fully functional fuel level and leak detection monitoring system. Any additional components required for a complete system shall be included whether specifically noted or not.
   f. Provide complete piping and electrical schematic diagrams for the entire system in the shop drawing submittals.

2. Tank Level Detection
   a. All necessary tank level detection probes shall be provided. The system shall include provisions for remote monitoring of the level detection system including all required terminals, switches, transmitters, and local wiring.

3. Double Wall Interstitial Leak Sensing
   a. Double wall interstitial leak sensing shall be capable of detecting the presence of any liquid in the annulus of the aboveground storage tanks.

4. Tank Alarm Horn and Light
   a. A local audible electronic horn and flashing amber light alarm system shall be furnished to indicate a trouble condition. Horn and light shall be NEMA 4 suitable for outdoor installations.

2.02 PIPE AND FITTINGS AND FUEL SYSTEM ACCESSORIES

A. Fuel, vent, and level gauge piping shall be Schedule 40, Type 316 stainless steel welded in conformance with ASTM A-312 and ASTM A-774 stainless steel socket and buttweld fittings.

B. Flexible piping at tank and equipment connections shall be constructed of a seamless flexible plastic liner with corrosion resistant type 316 stainless steel wire braid reinforced cover, stainless steel collars, and stainless steel fittings.

C. Provide all piping, valves, unions, filters, strainers, and other accessories as shown on the Drawings and/or as required for a complete system.

   1. Fire safe ball valves shall be three-piece design with stainless steel body and end caps, stainless steel ball and stem, reinforced Teflon seats and seals, and socket welded ends. Valves shall be of fire safe design and shall utilize secondary metal seating surfaces to ensure shut-off if the primary seats are destroyed by fire. Fire safe ball valves shall be Contromatics or Jamesbury.

   2. An anti-siphon valve, EBW model 605-300-01 shall be installed at the aboveground tank in the fuel intake line, at a location approximately 6” above the top of the tank, or as required by the valve manufacturer. Valve shall be suitable for the final elevations of the aboveground tank and generator as installed.

   3. Unions shall be Type 316 stainless steel with fully ground faces. Where threaded unions are required, all threaded connections shall utilize Hercules Chemical Company Inc. multipurpose heavy Teflon “Tape Dope” and “Megaloc and/or Real-tuff.”

   4. Manual strainers shall be "Y" type, capable of removing solids 0.01-inch diameter and larger. The strainer body shall be Type 316 stainless steel construction, and shall conform to the latest revision of ASTM A278 (1993), Class 30. Strainer elements, including woven wire mesh, shall be constructed of stainless steel. The design of the strainer body shall be such that the cleanout plug and screen may be easily removed to permit inspection and cleaning without disassembly of the inlet and outlet piping. End connections shall be ANSI screwed pipe threads. Provide three spare screen elements for each strainer furnished. The strainers shall be designed for a maximum operating pressure of 150 psig. They shall be as manufactured by GA Industries Inc., Pittsburgh, PA or approved equal.

   5. Refer to Section 16200 for fuel filter and oil water separator.

D. All piping and supports that are installed outdoors shall be designed and installed to meet wind loadings as required by the Florida Building Code, all other applicable codes, and the requirements of this specification. Design services shall be provided by a licensed Engineer as

described in Paragraph 1.06. Signed and sealed calculations shall be submitted for record purposes.

E. All piping and tank supports, including hangers, brackets, fasteners, and miscellaneous metals shall be Type 316 Stainless Steel.

F. Joint compound for steel pipe threaded connections shall be a non-hardening, non-solvent joint sealer.

G. Fire Suppression Kit:

1. Contractor shall furnish a packaged fire suppression kit including 10 lb. extinguisher with vinyl jacket.

H. Provide a Core Engineered Solutions Spill Kit, Model EP-SKL-2, Or Equal, including socks, pillows, wipers, mat pads, labels, Emergency Response Guidebook, and instruction manual.

I. Finish painting shall be provided as specified in Division 9 - Finishes and as specified herein.

1. Tank exterior shall be factory painted prior to shipment. Painting shall be two coats of epoxy powder coating suitable for outdoor corrosive environment and approved by Owner.

2. All non-stainless steel pipe fittings and nipples on the tank shall have a suitable primer and finish coat of epoxy powder coating suitable for outdoor corrosive environment and approved by Owner.

3. All colors to be selected by the Owner.

4. The Contractor shall provide minor field touch-up painting of fuel tank after completed installation. Surface preparation shall be in accordance with factory paint system. Any major defects or damage shall be inspected and repaired by the Manufacturer.

5. One quart of paint and a brush shall be provided to the Owner for field touchup painting.

PART 3 EXECUTION

3.01 INSTALLATION

A. General

1. Equipment shall be installed in accordance with the manufacturer's recommendations.

2. All materials and equipment shall be new and free from defects or damage and shall be installed in accordance with the approved recommendations of the manufacturer to conform to the contract documents. The installation shall be accomplished by workmen skilled in this type of work. Equipment shall be erected in a neat manner, shall be aligned, leveled and adjusted to provide satisfactory operation. Installation shall be such that connection and disconnection of piping and accessories can be readily made and so that all parts are easily accessible for inspection, operation, maintenance and repair. Minor deviations from indicated arrangements to provide proper access may be made.

3. Tank installers shall be certified in writing by the tank manufacturer as being qualified to install the equipment. A copy of the certificate shall be submitted to the local authorities prior to proceeding with construction.

4. Fuel storage tanks shall be grounded.

5. The Contractor shall install all warning and safety signs required by the local Fire Marshal and as specified herein.

B. Fuel Piping

1. All pipes shall be cut accurately to measurements established at the site and shall be worked into place without forcing or bending.

2. Piping shall be installed to minimize the quantity of piping joints. Provide unions and/or flexible connections at all equipment connections.

3. Joints shall be fabricated in accordance with standard industry practices and manufacturer's instructions. All joints shall be welded except where flanged or threaded connections to equipment or valves are required.

4. Aboveground steel piping shall be grounded. Where fittings cause a break in the electrical continuity of the system approval jumpers shall be provided.

5. Refer to Part 2 for requirements for piping mounted outdoors, and for wind restraint requirements.

C. Flexible Fuel Piping

1. Provide flexible piping connectors at all day tank connections, all generator connections, all storage tank connections and all equipment connections.

2. Flexible connections shall be a minimum of 12-inches long or as required for equipment removal or maintenance. Protect flexible connectors where physical damage may occur due to adjacent equipment, other piping, wiring, or where subject to possible damage from operating personnel.

D. Leak and Level Sensor Installation

1. Install all level and leak sensing equipment, monitoring panel interface modules and all wiring, conduit, junction boxes, sealing fittings and other material required for a complete operating system.

2. Install all monitoring equipment in accordance with the manufacturer's instructions including compliance with hazardous locations as defined in the National Electrical Code as locally amended and local codes having jurisdiction.

3. Provide instrument identification (tagging), calibration and manufacturer services.

3.02 CLEANING

A. At the conclusion of the work thoroughly clean all pipelines to remove all dirt, stones, pieces of wood or other material which may have entered during the construction period.

B. If defective piping or joints are discovered at this time, they shall be repaired or replaced by the Contractor at no cost to the Owner.

3.03 PERMITS

A. Contractor shall contact the local public health department, DEP, and the local building department for necessary inspections and to obtain required operating permits in the Owner's name.

B. The entire system including the tanks, piping, equipment, and leak detection system shall be inspected and approved by DEP.

C. Contractor shall obtain written approval of the installation from the local fire official of jurisdiction.

3.04 PROTECTIVE COATINGS

A. Finish painting shall be provided as specified in Division 9 - Finishes and as specified herein.

3.05 TESTING

A. Piping shall be tested in strict accordance with the manufacturer's testing requirements. Piping system shall be tested upon completion of the roughing-in before setting equipment. Piping shall be subjected to an air test of 10 psig maximum. The entire system shall be pressure tested with fuel at 25 psig and proved tight at this pressure for a period of four (4) hours. Defective work or material shall be replaced and retested. The system shall be test plugged or capped prior to testing to prevent test pressure from reaching any equipment or storage tank.

B. Storage tanks and piping shall be precision tested by a state qualified tester.

C. Storage tanks shall be pressure tested at 5 psi and all fittings soaped for a period of at least 12 hours prior to placing tanks. Tanks under test pressure shall not be left unattended.

D. Contractor shall provide fuel for any required testing and retesting. If the fuel subsequently becomes contaminated, Contractor shall dispose of the fuel at no cost to the Owner and in accordance with all DEP regulations. Upon completion of the testing and prior final acceptance of the system, the Contractor shall fill the tanks to 90% of capacity.

END OF SECTION

© 2019 CDM Smith
All Rights Reserved

THIS PAGE INTENTIONALLY LEFT BLANK

© 2019 CDM Smith
All Rights Reserved

SECTION 15990
TESTING, ADJUSTING AND BALANCING

PART 1 GENERAL

1.01 SCOPE OF WORK

A. Furnish the necessary labor, materials, instruments, transportation and devices required and test, adjust and balance the total heating-ventilating-cooling systems, both water and air systems. Each as specified and detailed herein, or as required to cause the systems to perform in accordance with the intent of the Drawings and this Section. Systems to be tested, adjusted and balanced include all systems installed by the HVAC Contractor.

B. Testing, balancing and operation of the systems shall be performed by competent and experienced personnel, having formerly done similar work and whose qualifications and performance shall be subject to the approval of the Engineer. Test and balance air and water system and submit testing and balancing reports to the Engineer for review and approval. Re-balance when required by the Engineer, incorporating all changes and certify the systems have been tested and balanced to meet specified requirements.

C. The tests shall demonstrate the specified capacities and operation of equipment and materials comprising the systems. Such tests other than as described herein, which are deemed necessary by the Engineer to indicate the fulfillment of the Contract, shall be made.

D. Data required by this Section shall receive complete approval before final payment is made.

E. If, in the opinion of the Engineer, the Construction Contractor has not, will not, or cannot comply with the testing, balancing and adjusting requirements of this Section, he may advise the Owner to employ a qualified firm to perform such work at Construction Contractor's sole expense.

F. Refer to Section 15500 for additional requirements.

G. Refer to the Drawings for additional requirements.

1.02 RELATED WORK

A. Refer to Section 15500.

1.03 SUBMITTALS

A. Submit, in accordance with Section 01300, the following:

1. Qualifications and experience information and data as detailed under Paragraph 1.04 below.

2. Proposed testing schedules and procedures.

3. Preliminary draft "system" balancing reports as systems are completed and tested.

4. Final systems and Project balancing reports as final system adjustments are made as systems are accepted by the Owner.

5. All submittals shall contain a statement that Sections 15500, 15990 and all other referenced Sections have been read and complied with. The certification statement shall be made by all of the following that are applicable; the Construction Contractor, sub-contractor and the vendor. The statement shall be an individual statement for each party involved, and shall be included with every submittal and resubmittal.

B. In general, corrections or comments or lack thereof, made relative to submittals during review shall not relieve the Construction Contractor from compliance with the requirements of the drawings and specifications. Submittals are for review of general conformance with the design concepts of the project and general compliance with the contract documents. The Construction Contractor is responsible for the final design conforming and correlating all quantities and dimensions, selecting fabrication processes and techniques of construction, coordinating the work of all trades, and performing the work in a safe and satisfactory manner.

1.04 QUALITY ASSURANCE

A. Qualifications standards for this work - Affiliation with manufacturers, installing contractors or engineering firms will not preclude acceptability. Submit qualifications within 60 days after Contract award. Membership in the AABC or NEBB for air and water testing is required. The testing balancing contractor shall not be affiliated with the on-site contractors.

B. To perform required professional services, the balancing agency shall have a minimum of two test-and-balance engineers certified by the AABC or NEBB.

C. This certified test-and-balance engineer shall be responsible for supervision and certification for the total work specified herein.

D. The balancing agency shall submit records of experience in the field of air and hydronic system balancing or any other data as requested by the Engineer. The supervisory personnel for the firm shall have at least 5 years' experience and all the employees used in this project shall be qualified technicians in this specific field.

E. The balancing agency shall furnish all necessary calibrated instrumentation to adequately perform the specified services. An inventory of all instruments and devices in possession of the balancing agency may be required by the Engineer to determine the balancing agency's performance capability.

1.05 ENGINEERING SERVICES

A. When engineering services are specified to be provided by the Construction Contractor, the Construction Contractor shall retain a licensed professional engineer to perform the services. The engineer shall be licensed at the time the work is done and in the State in which the project is located. If the State issues discipline specific licenses, the engineer shall be licensed in the applicable discipline. In addition, the engineer shall be experienced in the type of work being provided.

B. All work is to be done according to the applicable regulations for professional engineers, to include signing, sealing and dating documents. When submittals are required by a professional engineer, in addition to state required signing and sealing, a copy of the current wallet card or wall certificate indicating the date of expiration shall be included with the submittal.

1.06 SCHEDULE AND PROCEDURES

A. A complete schedule of balancing procedures for each of the buildings or systems shall be submitted in sufficient time in advance so that the Engineer might arrange to observe these procedures as they progress. Before commencing with the balancing of the systems submit the methods and instruments proposed to be used to adjust and balance the air and water systems.

B. Submit proposed testing programs at least 2 weeks prior to the scheduled test to assure agreement as to personnel and instrumentation required and scope of each testing program.

1.07 DRAWING REVIEW

A. The balancing organization shall thoroughly review the location of all fresh air dampers, return dampers, spill dampers, quadrant dampers, splitter dampers, bypass dampers, face dampers, fire dampers, registers, grilles, diffusers, VAV boxes, troffers, etc. The purpose of the review is to finalize the optimum locations for dampers, test ports and balancing valves shown on the Drawings.

1.08 EQUIPMENT CURVES

A. Fan Characteristics Charts: The HVAC and Construction Contractors shall provide to the Balancing Organization any required characteristic curve charts for all fans to include air conditioning units and air handling units. Characteristic curve charts shall be not less than 8-1/2-in by 11-in and shall show the static pressure, capacity horsepower and overall efficiency for operating conditions from no load to 130 percent of specified load. The minimum size of the actual fan curve shall be no less than 6-in by 8-in. The use of faxed copies of curves is not acceptable.

1.09 GUARANTEE

A. The balancing work shall be guaranteed to be accurate and factual data, based on readings in the field. All typewritten data shall be submitted within 14 working days of the performance of the test. Test data shall not be held until final completion, but shall be submitted on an interim basis as soon as the test or appropriate groups of tests are finished.

PART 2 PRODUCTS

2.01 MATERIALS

A. Furnish gaskets, lubricants and other expendable materials required to be replaced during the execution of this work.

B. Fixed-pitched pulleys required for fan adjustments shall be furnished on an exchange basis by the party responsible for the fan installation.

C. Where test results indicate that air quantities at any system fan are below or in excess of the specified amount, the HVAC and Construction Contractors, at their own expense, shall change driving pulley ratio or shall make approved changes to obtain the specified or scheduled air quantities.

D. Testing apparatus: Furnish plugs, caps, stops, valves, pumps, compressors, blowers and similar devices required to perform this work.

1. Furnish anemometers, thermometers, gauges, voltmeters, ammeters, lachometers and similar instruments, not part of the permanent installation, but required to record the performance of the equipment and systems.

2. Testing apparatus, not part of the permanent installation, shall remain the property of the Construction Contractor, but made available to the Engineer.

3. Instruments used for testing shall be certified accurate to within plus or minus 0.10 degrees F for temperature or plus or minus 0.10-in wc for pressure. Calibration of the instruments shall be done within 7 days of testing for this project and henceforth every 30 days thereafter for the duration of the testing period. Certification of calibration shall be submitted to the engineer prior to starting the work.

2.02 TESTING REPORTS

A. Forms: Furnish test report data on 8-1/2-in by 11-in bond AABC or NEBB form paper in accordance with Section 01300. Submit format for recording data and receive approval prior to use.

B. Reports shall be excel spread sheets format and shall be submitted in both hard copy and as a data file.

C. The report shall contain the following general data in a format selected by the balancing agency:

1. Project number

2. Contract number

3. Project title

4. Project location

5. Project architect

6. Project mechanical engineer

7. Test and balance agency

8. Test and balance engineer

9. Construction contractor

10. Mechanical subcontractor

11. Dates tests were performed

12. Certification

D. At a minimum, the report shall include:

1. Preface. A general discussion of the systems, any abnormalities and problems encountered.

2. Instrumentation list. The list of instruments including type, model, manufacturer, serial number and calibration dates.

3. System Identification. In each report, the VAV boxes, zones, supply, return and exhaust openings and traverse points shall be numbered and/or lettered to correspond to the numbers and letters used on the report data sheets and on the report diagrams.

E. Prepare 11-in by 17-in single line diagrams or 12-in by 18-in half size drawings showing all duct systems indicating all terminal air outlets including diffusers, grilles and registers, perforated plates, nozzles and other types of air supply, exhaust or return outlets. The minimum scale for diagrams showing the measurement points shall be 1/8-in=1-ft-0-in in the final form as submitted. The use of faxed copies of diagrams is not acceptable. Location of test points shown on the diagrams shall be clear and easy to locate on the diagram. The identification mark of the test points shall be the same as is shown on the test report showing the test data. The identification for test points shall include indication of the units served, and shall not have a duplicate in the project. All supply outlets shall be adjusted so that there are no drafts. Grille and register readings may be made by a vane anemometer, but diffuser readings shall be made by a flow hood or a velometer, using the tip recommended by the diffuser manufacturer. Each test sheet shall include the following data:

1. Job name and address.

2. Name of HVAC Contractor.

3. Name of balancing organization.

4. Instruments used to perform the test.

5. Name of test technician or test engineer.

6. Fan system and/or zone number.

7. Room number or area name.

8. Size of outlet.

9. Type outlet.

10. Manufacturer of outlet.

11. The cfm at each outlet on system and corresponding cfm at each outlet as noted on the plans.
12. Percent deviation of the measured flow versus the design flow.

13. Indication of the branch and terminal that are the open/low that are the basis for balancing the remainder of the system

PART 3 EXECUTION

3.01 START OF BALANCING

A. The Construction Contractor shall notify the Balancing Organization and Engineer when systems become operational and ready for preliminary and final testing, adjusting and balancing.

B. Final balancing shall not begin until system has been installed complete and is capable of normal operation. Provide personnel to assist in rough balance and calibration.

C. All grilles, dampers, fans, coils, pumps, valves and linkages shall be verified to be installed and operating.

D. System shall be capable of operating under control as specified on Drawings and/or contained herein.

E. Visually inspect all fire dampers on branch take-offs to each floor to ensure that they are fully open.

F. Verify with straight edge that fan/pump and motor shafts are parallel and that sheaves are in proper alignment.

G. Verify that belts are properly tensioned when unit is operating with no excessive squeal at startup. If not correct, adjust sheaves or motor base accordingly.

H. Start fans and verify that rotation is correct. If rotation is incorrect coordinate with electrical contractor to switch power leads such that the motor rotates correctly.

I. Check nameplate voltage on motor, compare to scheduled voltage. Notify the Engineer immediately of any discrepancies. Measure and record actual voltage across all power leads. Notify the Engineer of discrepancies immediately.

J. Check motor nameplates full load amps, measure and record amperage across all power leads. If there are marked discrepancies in amperage draws between legs, notify the Engineer immediately.

K. Measure and record fan/pump and motor rpm. Check that motor rpm agrees with nameplate and scheduled rpm.

L. If, upon commencing the work, the balancing contractor finds that the systems are not ready, or if a dispute occurs as to the readiness of the systems, the balancing agency shall request an inspection to be made by the Engineer. This inspection shall establish to the satisfaction of the represented parties whether or not the systems meet the basic requirements for testing and balancing. Should the inspection reveal the notification to have been premature, all costs for the inspection and work previously accomplished by the balancing agency shall be paid for by the Construction Contractor. Furthermore, such items that are not ready for testing and balancing shall be completed and placed in operational readiness before testing and balancing services shall be recommenced.

M. Leaks, damage and defects discovered or resulting from startup, testing and balancing shall be repaired or replaced to like-new condition with acceptable materials. Tests shall be continued until system operates without adjustments or repairs.

3.02 REQUIRED ACCURACY

A. Systems shall be balanced to be within the following limits of the capacity shown on the Drawings. Limits shall be applied to both individual components and to the system totals.

1. General Systems (plus/minus 10 percent)

3.03 TESTING

A. HVAC Air Systems

1. Balance the supply return and exhaust air systems in accordance with AABC or NEBB Standards by the use of direct reading instruments such as an "anemotherm" or velometer which has been properly calibrated.

2. Temporarily add static pressure to the system, to simulate the effect of dirty filters, by blanking off portions of the filter section, covering filter section with cheesecloth or other suitable means. Confirm static has been added with new static pressure reading across fan. Remove cheesecloth, etc, after traverses are complete.

3. If so instructed by the Engineer, further balancing of temperature shall be made either by thermometer or by temperature recorder.

4. The sequence of air balancing shall be as follows:
   a. First, establish air flow quantity at supply fan by main duct traverse.
   b. Next, establish air flow quantities in main ducts and branches.
   c. Finally, establish air flow quantities at outlets, using proportional balancing among branch outlets. All multiple opening systems shall be left with at least one "open low" inlet or outlet, to which all other system openings shall be proportionally balanced. The "open low(s)" on each system shall be indicated in the report.
   d. Grille and register readings may be made by a vane anemometer, but diffuser readings shall be made by a flow hood or a velometer using the tip recommended by the diffuser manufacturer. All supply outlets shall be adjusted so there are no drafts.
   e. After all outlets are adjusted to within the tolerances specified elsewhere in this Section, remeasure all system outlets, and retraverse all branch and main ducts to establish final "as balanced" flows.
   f. All main air ducts shall be traversed, using a Pitot tube and manometer. The manometer shall be calibrated to read two significant figures in all velocity pressure ranges. The static pressure reading at the traverse point shall be recorded for each successive traverse.
      1) A main duct is defined as either of the following:
         a) A duct serving five or more outlets.
         b) A duct serving two or more branch ducts.
         c) A duct emanating from a fan or plenum.
      2) All other ducts are branch ducts.

3) The intent of this operation is to measure by traverse, the total air quantity handled by the fan and to verify the distribution of air to zones and to adjust system pressure to minimum level required to satisfy the farthest air outlet.

g. Adjust fan speeds if results of system capacity tests are not within tolerances specified and repeat Paragraphs 3.03.A.4.c, d, and e above, as required.

h. Mark all final balancing damper positions with a permanent marker.

5. Furnish data in excel spread sheet format tabulating the following:
   a. Opening number, type, size and design flow rate.
   b. Quantity of air in cfm at each air outlet and inlet.
   c. Dry and wet bulb temperature in each room.
   d. Dry and wet bulb temperature of the supply air.
   e. Dry and wet bulb temperature of the return air.
   f. Outdoor dry and wet bulb temperature at the time the above tests are conducted.
   g. Total, sensible, and latent capacity in BTUH.

6. Adjust belts, sheaves and the alignment of air handling equipment.

7. Where various combinations of sheaves must be installed on fan systems to achieve the correct air delivery, change the sheaves and continue to take successive readings until the correct combinations are installed.

8. Furnish data in excel spread sheet format taken at each air moving device, to include fans, packaged units and air handling units, tabulating the following:
   a. Manufacturers, model number and serial number of units.
   b. All design and manufacturer's rated data.
   c. Total quantity of supply air in cfm.
   d. Total quantity of return air in cfm.
   e. Total quantity of exhaust or relief air in cfm.
   f. Total quantity of outside air in cfm.
   g. Outlet velocity - fpm.
   h. The rpm of each fan or blower.
   i. Maximum tip speed - fpm.
   j. The rpm of each motor.
   k. Voltage and ampere input of each motor (one reading for each phase leg on 3 phase motors).
   l. Pressure in inches w.g. at inlet of each fan or blower.
   m. Pressure in inches w.g. at discharge of each fan or blower.
   n. Pressure drops across system components such as louvers, filters, coils and mixing boxes.
   o. Submit the actual fan operating point on a copy of the fan shop drawing showing operating curve.
   p. List the following data from all fan motors installed.
      1) Manufacturer model and size.
      2) Motor horsepower, service factor and rpm.
      3) Volts, phases, cycles and full load amps.
      4) Equipment locations.
   q. Pressure in inches w.g. at inlet to unit cabinet.
   r. Pressure in inches w.g. at discharge from unit cabinet.
   s. Outdoor air and return air damper position.
   t. List the following data for all coils installed in the unit:

1) Airflow rate in cfm.
2) Number of rows.
3) Number of fins per inch.
4) Face area in square feet.
5) Tube size in inches.
6) Tube and fin materials.
7) Outdoor-air, wet- and dry-bulb temperatures in deg F.
8) Return-air, wet- and dry-bulb temperatures in deg F.
9) Entering-air, wet- and dry-bulb temperatures in deg F.
10) Leaving-air, wet- and dry-bulb temperatures in deg F.
11) Water flow rate in gpm.
12) Water pressure differential in feet of head or psig.
13) Entering-water temperature in deg F.
14) Leaving-water temperature in deg F.
15) Refrigerant expansion valve and refrigerant types.
16) Refrigerant suction pressure in psig.
17) Refrigerant suction temperature in deg F.
18) Inlet steam pressure in psig.
19) Input fuel type.
20) Input fuel capacity in BTU/h.
21) Number of stages.
22) Actual operating current and voltage for all legs.

B. Condensing Units

1. Furnish typewritten data, tabulating as follows:
   a. Manufacturer, model number, size and serial number of all units.
   b. All design and manufacturer's rated data.
   c. Suction and condensing temperatures, and pressures.
   d. Temperatures of entering and leaving air.
   e. Voltage and ampere input of motors under full load (one for each phase leg).
   f. Capacity in BTUH.

C. Electric Heating Coils

1. Furnish typewritten data tabulating the following:
   a. Manufacturer and model number.
   b. All design and manufacturer's rated data.
   c. Actual operating current and voltage for all legs.
   d. Coil location and identification.
   e. Number of stages.
   f. Dry bulb inlet and outlet coil temperatures.
   g. Air flow in cfm.
   h. Face area in square feet.
   i. Capacity in BTUH.

3.04 FINAL ACCEPTANCE

A. At the time of final inspection, the balancing agency shall recheck, in the presence of the Engineer, specific and random selections of data recorded in the certified test-and-balance report.

B. Points and areas for recheck shall be selected by the Engineer.

C. Measurements and test procedures shall be the same as the original test and balance.

D. Selections for recheck, specific plus random, shall not normally exceed 15 percent of the total number tabulated in the report, except where special air systems require a complete recheck for safety reasons.

E. Specific systems for recheck shall include the systems in the ozone generation area or as required by the Engineer.

F. If the specific rechecks are more than 5 percent deviation from the report or specified flows, all of the systems, that require specific recheck, shall be rebalanced. If 5 percent or 5 of the random checks, whichever is less, exceeds a 10 percent deviation from the specified flows, the report shall be rejected. In the event the report is rejected, all systems shall be readjusted and tested, new data recorded, a new certified test-and-balance report submitted, and a new inspection test made, all at no additional cost to the Owner.

END OF SECTION

© 2019 CDM Smith
All Rights Reserved

SECTION 16000
ELECTRICAL WORK - GENERAL

PART 1 GENERAL

1.01 DESCRIPTION OF WORK

A. In general, the work specified in this division of the specifications includes the furnishing of all labor, material, auxiliaries, and services necessary to install complete and properly operating electrical systems, including all fees, charges, and permits necessary.

B. The Contractor shall furnish and install all wire, cables, conduits, wiring, wiring devices, lighting fixtures, motor controllers, safety switches, relays, control equipment, and all other apparatus and accessories indicated, specified, or required for complete lighting, power, instrumentation and control systems for the project facilities.

C. The Contractor shall refer to every section of these specifications for installation and coordination requirements applicable to the work specified in this division. The Contractor shall furnish and install all wiring and connections to all electrical equipment furnished under other sections of these specifications, except where specified or indicated otherwise.

D. The Contractor shall coordinate all electrical work with other project construction trades, installation requirements, sequence of construction schedule, etc., including coordination and installation of required conduit sleeves and supporting devices.

E. The Contractor shall be required to coordinate all electrical system connections with each appropriate utility company and shall furnish and install all equipment or material necessary to provide complete electrical and communication services in accordance with all utility company requirements.

1.02 GENERAL REQUIREMENTS

A. Design drawings are diagrammatic and intended to show approximate installation and equipment locations. All dimensions shall be verified in the field and coordinated with shop drawings issued. Equipment schedules are intended to serve as a guide only and do not relieve the Contractor of the responsibility for the complete furnishing and installation of all wiring, cable, conduits, or additional apparatus required.

B. The Contractor shall furnish, install, maintain, and remove upon completion of the project, all temporary service required for construction and testing. The service shall be for general power and lighting and shall include distribution system, panelboards, grounding, branch circuits, general lighting, and receptacles as required.

C. The Contractor shall furnish and install reinforced concrete pads, for electrical equipment, of size as shown on the drawings or required. Unless noted otherwise, pads for indoor equipment shall be 4 inches high and exceed the equipment dimensions by 6 inches on all sides not flush to a wall; pads for outdoor equipment shall be a minimum of 12 inches thick and exceed the equipment dimensions by 2-1/2 feet on sides equipped with door access and 6 inches on all remaining sides. Motor control centers, switchboards, etc., located indoors and equipped with a

wireway at the base, shall be centered on a continuous reinforced concrete curb, minimum 6 inches high and 8 inches wide.

D. The Contractor shall furnish a covered, weather-protected facility, providing a clean, dry, non-corrosive environment for storage of all electrical and instrumentation equipment incorporated into this project in accordance with the provisions of the General Conditions.

E. The Contractor shall furnish and install a system of engraved, laminated nameplates (black lettering on a white background), designed to identify each major piece of equipment.

F. Motors will be furnished with the equipment they drive unless indicated otherwise. Motors shall be premium efficiency design. Motors located outdoors or within corrosive environments shall be severe duty construction.

1.03 SUBMITTALS

A. For each individual section of this division, there shall be submitted for approval a single, complete shop drawing submission. All elementary and schematic diagrams shall be provided with indication of system coordination and complete description of sequence of operation. Deviations from the contract documents shall be clearly identified. One copy of each shop drawing submittal shall be provided in PDF format.

B. Complete operation and maintenance instruction manuals, including system schematics which reflect "as-built" modifications, shall be provided. All wire terminations shall be numbered and identified on as-built drawings included as part of the operations and maintenance manuals. All drawings included within the operation and maintenance manuals shall be reduced to a maximum dimension of 17 inches x 11 inches, and shall be legible and reproducible. Special maintenance requirements particular to the system shall be clearly defined along with special calibration and test procedures. One copy of each operation and maintenance manual submittal shall be provided in PDF format.

C. Following approval of the operation and maintenance instruction manual submittals, an electronic copy of all as-built electrical apparatus drawings, schematic diagrams, control wiring diagrams, instrumentation drawings, etc. shall be provided. A drawing index, identifying each electronic drawing file name and a description of the contents, shall be included within the operation and maintenance instruction manuals.

1. Unless otherwise approved prior to submittal, all electronic drawings shall be provided on compact disk in both PDF and AutoCAD 2013 format.

D. One complete set of design drawings shall be neatly marked daily as a record of job progression and "as-built" installation. The drawings shall reflect the actual installed locations of all equipment and indicate the exact routing and elevations of all concealed conduits. Upon completion of the project, the drawings shall be coordinated with the as-built drawings and submitted to the Engineer. One copy of the final as-built drawings shall be provided in PDF format.

E. The Contractor shall maintain a record of all construction documentation including construction survey data, inspection reports, test reports, startup logs, etc. Upon completion of

the project, copies of all construction documentation shall be submitted to the engineer. One copy of the final construction documentation shall be provided in PDF format.

PART 2 PRODUCTS

2.01 MATERIALS

A. All material shall be new and shall conform with the standards of the Underwriter's Laboratories, Inc., American National Standards Institute, National Electrical Manufacturers' Association, Insulated Power Cable Engineers Association, and Institute of Electrical and Electronic Engineers in every case where such a standard has been established for the particular type of materials in question.

B. The use of a manufacturer's trade name and catalog number is not intended to indicate preference but only the type and quality of the product desired. Products of reputable manufacturers of equal quality and functional type will be acceptable. Substitutes which tend to lower the quality of the work will not be permitted.

C. Acceptance of alternate equipment does not relieve the Contractor of the responsibility of compliance with the performance and accuracy requirements of these specifications. Where such substitutions alter the design or space requirements indicated on the Contract Drawings, detailed drawings shall be prepared and submitted by the Contractor delineating any changes in or additions to the work shown on the Contract Drawings, and such drawings and changes or additions to the work shall be made by the Contractor at no additional expense to the Owner. In all cases, the burden of proof that the material or equipment offered for substitution is equal in construction, efficiency, and service to that named on the Contract Drawings and in these Contract Documents shall rest on the Contractor and, unless the proof is satisfactory to the Engineer, the substitution will not be approved.

D. Wherever possible, equipment items having the same or similar rated capacity or function shall be identical.

E. All equipment and apparatus shall be the manufacturer’s latest proven design, neither presently scheduled for obsolescence nor developmental prototype.

F. All electrical apparatus and lighting equipment shall be in compliance with the Federal Energy Policy Act of 1992, including all subsequent updates, revisions, and replacements.

2.02 RACEWAYS

A. Metallic Conduit (Aluminum): All conduit shall be heavy wall rigid aluminum of standard pipe weight unless noted otherwise.

1. Couplings, conduit unions, conduit fittings, etc., shall be aluminum, shall have conventional trade dimensions, and shall be internally threaded with a tapered thread at each end to fit the tapered thread specified for the corresponding size conduit. Conduit outlet body covers shall be cast construction.

2. All conduits, couplings, and fittings run exposed to corrosive atmospheres, and all conduit elbows and risers within concrete encasement, shall have a gray or black factory-applied

PVC coating of not less than 20 mils thickness. Damaged PVC coatings shall be repaired with an approved compound. Conduit supports, channels, and mounting apparatus shall be 316 stainless steel.

B. Flexible Conduit: All flexible conduit shall be Type UA liquid-tight flexible metal conduit made with galvanized steel flexible conduit covered with an extruded PVC jacket, unless noted otherwise. Fittings shall be the type specifically designed for flexible conduit use and shall form watertight connections. Flexible conduit fittings shall be aluminum construction.

1. Flexible conduit shall only be used for connections from conduits, junction boxes, or motor controllers to mechanical equipment or where the location of the connection is such that it is impractical to make a rigid conduit connection, where vibration isolation is required, or where specifically called for on the drawings. Flexible conduit shall be used for connection to all motors.

C. Non-Metallic Conduit: Non-metallic conduit, couplings, and fittings shall be Schedule 40 PVC unless noted otherwise. All PVC conduit joints shall be solvent-welded in accordance with the manufacturer's recommendations.

1. Underground conduits and conduit embedded within slabs on grade shall be non-metallic; however, conversion shall be made to rigid metallic conduit before conduit runs exit encasement. Conversion elbows, fittings and risers within the concrete encasement shall be PVC coated rigid metallic conduit.

2. Underground conduits shall be installed not less than 24 inches below grade.

3. Underground pull boxes shall be provided for all miscellaneous underground conduit runs over 200 feet long.

4. A minimum 3-inch wide polyethylene warning tape, yellow for electrical and orange for telephone, with imprinted legend, shall be installed in the backfill above all underground conduits. Warning Tape shall be Allen Terra Tape, or equal and shall be guaranteed not to discolor. Unless indicated otherwise, the tape shall be 12 inches below the finished ground grade.

2.03 WIRES AND CABLE

A. Low Voltage Cable: Low voltage wire and cable shall be 600 volt, single-conductor copper, rated 90 degrees C dry and 75 degrees C wet. Unless indicated otherwise, low voltage building wire shall have XHHW-2 insulation.

B. VFD Cable: VFD power cable shall be used to interconnect AC variable frequency drives to compatible AC motors. VFD power cables shall be 1000V rated, extra flexible, extreme high-strand tinned copper conductors with XLPE insulation, three symmetrical high-strand tinned copper grounds, foil/braid shield, and flexible TPE jacket; Belden 29500F series.

1. VFD cables are subject to a harsh operating environment characterized by high voltage spikes, high noise levels and adverse environmental conditions. VFD cables shall be specifically designed to overcome the shortcomings of single conductor lead wire installed

in conduit, unshielded tray cables, or continuously welded armored cable typically used for this application.

C. Instrumentation Cable: Instrumentation cable shall be single twisted pair, 600 volt, stranded, tinned copper conductors with cross-linked polyethylene primary insulation, overall foil shield with tinned copper braid, and chlorinated polyethylene jacket; Belden 3072F.

D. Inner Panel Wiring: Wiring for instrumentation and control panels shall be single conductor, 600 volt, 125 °C rated UL Type AWM stranded tinned copper conductors with cross-linked polyethylene insulation, Belden 356 series.

E. Profibus Cable: Profibus cable shall be Siemens type FC (Fast Connect) 2 wire shielded cable specifically designed for rapid installation, with flame retardant foam polyethylene insulation, foil/braid shield, and sunlight resistant PVC jacket; Siemens 6XV1830.

F. Profinet Cable: Profinet cable shall be Siemens Fast Connect type.

G. Fiber Optic Cable: Unless otherwise indicated or required to meet the specific installation requirements, fiber optic cables shall be UL listed, OFNR-rated, UV, water and fungus resistant, all dielectric, tight buffered construction, consisting of tight buffered optical fibers with acrylate fiber coating, central strength member, aramid yarn strength member, ripcord, and PVC outer jacket.

1. Single-Mode optical fibers shall be minimum 9 micron core, 125 micron clad, 900 micron buffer glass fiber conductors. Fiber optic cables shall be Optical Cable Corporation DX-DSLX9YR.

2. Multi-mode optical fibers shall be 50 micron core, 125 micron clad, 900 micron buffer glass fiber conductors. Fiber optic cables shall be Optical Cable Corporation DX-DWLX9OR.

3. Fiber optic cable termination interface patch panels shall be provided at all termination points.

4. Each cable fiber shall be terminated with connector type as required by the utilization equipment.

5. Fiber optic jumper cables shall be provided from patch panels to the utilization equipment.

6. Fiber optic cable test report shall be provided following installation.

2.04 TERMINAL BLOCKS AND WIRE MARKING

A. Terminal blocks for power conductors shall be 600 volt, three pole unit construction type with high pressure solderless connectors, headless socket screws, and ampere rating equal to or greater than the ampacity of the maximum conductor size to be terminated; Square D Type LBC, or equal.

B. Terminal blocks for control conductors shall be 600 volt, sectional rail mounted terminal blocks with plastic pre-printed terminal numbering markers on both the inside and outside tracks, and

provisions for center terminal bridge jumper cross connections with no loss of space on terminal or rail; Siemens 8WA1 011-1DF11, or equal. Terminal blocks for general control connections shall be feed-through terminal blocks; terminal blocks for instrumentation signal circuits shall be knife type test/disconnect terminal blocks; and terminal blocks for cable shield termination and grounding shall be ground blocks.

C. Cable and conductor markers shall be heat shrinkable sleeve markers with permanent legible machine printed markings.

2.05 BOXES

A. General: Boxes shall be installed at all locations necessary to facilitate proper installation and equipment connection, including each conduit/cable transition.

1. Minimum dimensions of boxes shall not be less than NEC requirements and shall be increased if necessary for practical reasons or where required to suit job condition.

2. Boxes shall have only the holes necessary to accommodate the conduits at point of installation. All boxes shall have lugs or ears to secure covers.

3. All boxes shall be rigidly secured in position.

B. Outlet Boxes: The location of outlets as shown on the drawings will be considered as approximate only. It shall be the work of this section to study all plans with relation to spaces surrounding each outlet in order that the work may fit and that when fixtures or other fittings are installed they shall be symmetrically located to best suit each condition. All outlets shall be coordinated with the work of other sections of these specifications to prevent outlets or fixtures from being covered by pipe, duct, etc.

1. Outlet boxes shall be cast aluminum one piece hub type standard gang boxes with rubber gaskets. Outlet boxes shall be equipped with cast screw-type covers; Crouse-Hinds Series FS or equal.

C. Pull Boxes: Pull boxes, including junction boxes and terminal boxes, shall be installed at all necessary points, whether indicated or not, to prevent injury to the insulation or other damage that might result from pulling resistance or other reasons during installation.

1. Unless indicated otherwise, pull boxes shall be NEMA 12 construction with gasketed screw covers and gray baked enamel over a rust-inhibiting primer finish. Pull boxes installed outdoors or in corrosive atmospheres shall be NEMA 4X aluminum or 316 stainless.

2. Branch circuit pull boxes shall be appropriate outlet boxes with blank covers.

D. Underground Pull Boxes: Underground pull boxes shall be minimum 24-inch x 14-inch x 18-inch deep composolite service boxes constructed of reinforced polymer concrete suitable for light traffic loading, with locking cover and molded logo; Quazite Composolite, or equal.

1. Unless otherwise indicated underground pull boxes shall have solid bottoms. Where open bottom pull boxes are indicated or approved for installation, a bed of gravel, minimum 12"

thick and exceeding the pull box footprint by 6" on all sides, shall be placed beneath each open bottom pull box.

2.06 WIRING DEVICES

A. Wall Switches: Wall switches shall be specification grade, totally-enclosed, toggle switches rated 20 ampere, 120/277 volt. Switches shall be single pole, double-pole, 3-way, or 4-way as indicated; GE-5951 through 5954, Hubbell 1221 through 1224, Leviton 1221 through 1224, or equal.

1. Wall switches shall be furnished with suitable plates. The material, colors, and finishes of switch plates shall be as directed to harmonize with the surroundings. In general, standard switches shall be brown with Sierra S-1N, Hubbell S-1N, or equal, 302 stainless steel plates.

2. Unless specified otherwise, wall switches installed outdoors or in corrosive atmospheres shall be weatherproof and vapor-tight. Weatherproof and vapor-tight switches shall consist of standard wall switches as previously specified, enclosed in Series FS condulets equipped with vapor-tight gasketed covers; Crouse-Hinds Series DS128, Appleton Series FSK-1VTS, or equal.

B. Receptacles: Receptacles shall be specification grade, grounding type, totally-enclosed, duplex receptacles rated 20 ampere, 125 volt; GE 8300-9, Hubbell 5362-GRY, Leviton 5362-GY, or equal.

1. Each receptacle shall be provided with a single gang plate for flush mounting. The materials, colors, and finishes of the plates shall be as directed to harmonize with the surroundings. In general, receptacles shall be gray with Hubbell S-8N, Sierra S-8N, or equal, 302 stainless steel plates.

2. Unless specified otherwise, receptacles installed outdoors or in corrosive atmospheres shall be weatherproof. Weatherproof receptacles shall each consist of standard duplex receptacles as previously specified, enclosed in Series FS condulet equipped with a weatherproof cover; Crouse-Hinds WLRD or equal. Outdoor receptacles installed on circuits without ground fault protection shall be type GFCI.

3. The Contractor shall connect the grounding terminal in each receptacle to the inside of the metal enclosure.

2.07 MOTOR STARTERS

A. Manual Motor Starters: Manual motor starters shall be 600 volt, toggle-type suitable for installation within standard outlet boxes. Enclosures for all starters not installed in outlet boxes, and all starters located outdoors, shall be NEMA 4X aluminum or 316 stainless steel.

1. Where required, starters shall be equipped with overload protection on each pole.

2. Starters located in hazardous areas shall be front-operated explosion-proof, manual motor starting switch condulets; Crouse-Hinds Series EDS, Appleton EDS, or equal.

3. Each starter for automatic control shall be equipped with an H-O-A selector switch.

2.08 DISCONNECT SWITCHES

A. Disconnect switches shall be 600 volt rated heavy-duty safety switches with full cover interlocks and quick-make, quick-break mechanisms. Switches shall be fused or non-fused, of capacities noted; General Electric Type TH or equal.

1. Unless indicated otherwise, switches shall have NEMA 12 enclosures with gray baked enamel over a rust-inhibiting primer finish. Switches located outdoors or in corrosive atmospheres shall have NEMA 4X type 316 stainless steel enclosures.

2.09 CIRCUIT BREAKERS

A. Circuit breakers shall be 600 volt thermal magnetic, quick-make, quick-break molded case air circuit breakers, with trip-free operation, incorporating an internal trip bar and a single external handle. Breaker ratings shall be coordinated with the installed service and loads supplied. Unless indicated otherwise, breakers shall be rated not less than 25,000 amperes RMS symmetrical.

1. Unless indicated otherwise, circuit breakers shall have NEMA 12 enclosures with gray baked enamel over a rust-inhibiting primer finish. Breakers located outdoors or in corrosive atmospheres shall have NEMA 4X aluminum or 316 stainless steel enclosures.

2. Circuit breakers used as a service disconnecting device shall be 100% rated and UL service entrance rated; shall be equipped with long time, short-time, instantaneous and ground fault adjustments for system selectivity; and shall be fully rated for the maximum fault current, without the use of current limiters.

2.10 SUPPORT SYSTEMS

A. Groups of two or more conduits, and all boxes and equipment, shall be mounted on a system of minimum 1-5/8-inch x 1-5/8-inch heavy wall aluminum or 316 stainless steel channel with a minimum of 25% unused capacity.

B. Overhead conduits shall be supported on trapeze hangers from approved concrete inserts and shall be grouped with pipes wherever possible.

C. Support system hardware, including hanger rods, shall be aluminum or stainless steel.

2.11 LIGHTING FIXTURES

A. Lighting fixtures shall be of specification grade and listed or labeled by Underwriters Laboratories (UL) or an approved Nationally Recognized Testing Laboratory (NRTL).

B. LED fixtures shall comply with the following:

1. UL Standard 8750 “Light Emitting Diode Equipment for Use in Lighting Products”

2. IES Standard LM-79 “Electrical and Photometric Measurements of Solid-State Lighting Products”

3. IES Standard LM-80 “Measuring Lumen Maintenance of LED Light Sources”

4. IES Standard TM-21 “Projecting Long Term Lumen Maintenance of LED Light Sources”.

5. ANSI C78.377 “Specifications for the Chromaticity of Solid State Lighting Products” with LEDs binned within a maximum three-step MacAdam Ellipse to ensure color consistency amongst luminaries of the same type.

C. For LED fixtures, lamps, drivers, and components, provide a complete warranty for parts and labor for a minimum of five years from the date of Substantial Completion.

D. Provide only LED fixtures with a Design Lights Consortium (DLC) listing, a U.S. Department of Energy (DOE) “LED Lighting Facts” label, or a U.S. Environmental Protection Agency (EPA) ENERGY STAR label, which have demonstrated third-party testing verification.

E. Recessed lighting fixtures shall be thermally protected.

F. LED fixtures shall be modular and allow for separate replacement of LED lamps and drivers. User serviceable LED lamps and drivers shall be replaceable from the room side.

G. Dimmable LED fixtures shall have either a 0-10 volt, 3-wire dimming driver, or a two-step (50%-100%) line voltage, two switch controlled dimming driver, as shown on the drawings.

H. Unless otherwise indicated, LED lamps shall have a color temperature of 3500 degrees K, a CRI of 80 minimum, and a lumen maintenance L70 rating of 50,000 hours minimum.

I. LED drivers shall be electronic-type, labeled as compliant with radio frequency interference (RFI) requirements of FCC Title 47 Part 15, and comply with NEMA SSL 1 “Electronic Drivers for LED Devices, Arrays, or Systems”. LED drivers shall have a sound rating of “A”, have a minimum efficiency of 85%, and be rated for a THD of less than 20 percent at all input voltages.

J. Dimmable LED drivers shall be 0-10V type. Dimmable LED drivers shall be capable of dimming without LED strobing or flicker across their full dimming range.

K. Battery-backed LED emergency lighting fixtures shall consist of a normal LED fixture with some or all of the LEDs connected to a battery and charger. The battery shall be nickel cadmium and sized for a minimum of 90 minutes of fixture operation. The charger shall be solid-state and provide overload, short circuit, brownout and low battery voltage protection. The battery and charger shall include self-diagnostic and self-exercising circuitry to exercise and test itself for 5 minutes every month and for 30 minutes every 6 months. The fixture shall include a test/monitor module with LED status indicating lights mounted so as to be visible to the public. The fixture shall not contain an audible alarm.

L. Lighting contactors shall be electrically-operated, mechanically-held, suitable for panelboard mounting, and fully rated as indicated for tungsten and ballast lighting; Square D Type L and S, ASCO 917 and 920, or equal.

1. Contactors shall be provided with fused control circuits and 120 volt operating coils. Contactors shall be furnished with control power transformers where required.

2. Contactors shall be panelboard-mounted, or mounted in separate enclosures, as indicated. Contactor enclosures for interior locations shall be NEMA 1 code-gauge steel with gray baked enamel over a rust-inhibiting primer finish. Enclosures for exterior locations shall be NEMA 4 seam-welded aluminum. Enclosures located in corrosive atmospheres shall be type 316 stainless steel.

2.12 COMMUNICATION NETWORKS

A. All Profibus installations must comply with the Profibus User Organization. More information can be found at “www.Profibus.com”.

1. Reference “Profibus Design Guideline” order number 8.012.

2. Reference “Profibus Assembling Guideline” order number 8.022.

3. ALL recommendations from the Profibus User Organization must be followed, such as using fiber optic cable instead of copper when leaving a building.

4. Profibus cable shall be type FC (Fast Connect) 2 wire shielded cable specifically designed for rapid installation; Siemens 6XV1830.

5. Profibus connectors shall be made with metal housing and have Power, Transmit, Termination and Error indicating LED’s. Connectors shall be Brad Harrison MA9D00-42 and MA9D01-42 type or equal.

6. Only Diagnostic Repeaters shall be used where repeaters are required. Standard repeaters shall not be accepted. Repeaters shall be Siemens Diagnostic repeater 6ES7 972-0AB01-0XA0.

7. Provide an active termination resistor on the last device in the segment. Termination resistor shall be Procentec 101-00211A.

8. For fiber optic communications use the Siemens OLM G12 Part # 6GK1503-3CB00.

B. All Ethernet installation must comply with the Profinet User Organization. More information can be found at “WWW.Profinet.com”.

1. Reference “Profinet Installation Guideline for Cabling and Assembly” order number 8.072.

2. All recommendations from the Profinet User Organization must be followed such as using fiber optic cable when leaving a building.

3. Ethernet connectors shall be made with metal housing. Connectors shall be Siemens 6GK1901-1BB10-2AA0 type or equal.

4. All switches shall have the capability to be managed. Switches shall be of type Siemens Scalance X212-2 at minimum.

PART 3 EXECUTION

3.01 CODES, PERMITS, AND INSPECTIONS

A. The installations shall be in accordance with the regulations of the latest editions of the National Electrical Code, National Electrical Safety Code, applicable city, state, and local codes and regulations and other applicable codes, including utility company codes.

B. All permits required by state or local ordinances shall be obtained and after completion of the work, a certificate of final inspection and approval from the electrical inspector shall be furnished to the Owner. All permits for installation, inspections, connections, etc., shall be taken out and paid for as part of the work under this section.

3.02 CONDUIT INSTALLATION

A. Conduit Installation: All conduits shall be run in such a manner as to cause the least interference with other trades. Conduits shall be joined by means of couplings or 3-piece coupling type conduit unions. Joints shall be set up tight. Runs shall be straight and true; elbows, offsets, and bends shall be uniform and symmetrical. Installation workmanship shall be of the best quality and skill.

B. Conduits shall be of sizes required to accommodate the number of conductors in accordance with the tables given in the current edition of National Electrical Code or as noted on the drawings. The minimum size of conduit shall be 3/4-inch.

C. Conduit runs shall terminate below the particular section of the motor control center or equipment to which their respective circuits run. Concealed conduits shall be run in as direct a line as possible. Exposed conduits shall be run parallel to or at right angles with the lines of the building. All bends shall be made with standard conduit ells, conduit bent to not less than the same radius, or malleable iron conduit outlet bodies with gasketed cast iron covers. Adjacent conduit runs shall be installed with concentric bends. All bends shall be free from dents or flattenings. Not more than the equivalent of four quarter bends shall be used in any one run between terminals at cabinets, outlets, and junction or pull boxes. Boxes shall be located in accessible locations.

D. Conduit shall be continuous from outlet to outlet and from outlets to cabinets, junctions, or pull boxes and shall enter and be secured to all boxes in such a manner that each system shall be electrically continuous from point of service to all outlets. Insulated grounding bushings shall be used on all metallic conduit. Terminals of all conduits shall be plugged with an approved cap to prevent the entrance of foreign materials when exposed during construction.

E. As far as practicable, all exposed conduits shall be run without traps. Where dips are unavoidable, a pull box or approved conduit outlet body shall be placed at each low point. Conduit systems shall be completed before conductors are drawn in. Where conduits must be

run exposed, except as indicated in the drawings, locations of the runs shall be subject to approval.

F. Where exposed conduit needs clamping to the structures, clamps shall consist of galvanized malleable iron 1-hole pipe straps and pipe spacers, galvanized steel bolts of appropriate size to fill the holes in the straps and spacers, and approved expansion shields. Clamps used with aluminum conduit, and clamps located outdoors or in “corrosive atmospheres”, shall be PVC coated, aluminum or 316 stainless steel. Clamps shall be bolted to the structure or where necessary to intermediate galvanized steel brackets. Spacing between conduit supports shall not exceed the recommendations published by the National Electrical Code. No deformed, split, or otherwise defective conduit or fitting shall be installed. Conduit shall be installed with a minimum number of joints.

G. Where conduit has been cut in the field, it shall be cut square using a hand or power hacksaw or approved pipe cutter using cutting knives. The use of pipe cutters with cutterwheels will not be permitted. The cut ends of the field-cut conduit shall be reamed to remove burrs and sharp edges. Where threads have to be cut on conduit, the threads shall have the same effective length and shall have the same thread dimensions and taper as specified for factory-cut threads on conduit. Conduits installed in the work with threads not complying with these requirements shall be removed and replaced.

H. All conduit shall be cleaned, prior to pulling in wire and cable, by pulling a stiff wire brush of the size of the conduit through it. This cleaning shall remove all foreign matter, including water, from the conduit. All boxes in which the conduit terminates shall be cleaned of all concrete, mortar, or other foreign matter and all threads in boxes shall be left clean and true upon completion of the work.

J. All spare, future, or empty conduits shall be equipped with a pull wire prior to capping.

3.03 WIRE AND CABLE INSTALLATION

A. The installation of wires and cables includes all splicing of these wires and cables to each other and connecting them to receptacles, switches, control boxes, lighting fixtures, motors, and all other electrical apparatus installed under this Contract. All cable installation methods shall correspond to manufacturer's recommendations.

B. Wire and cable shall be suitably protected from weather or damage during storage and handling and it shall be first-class condition when installed.

C. The minimum size of wire or cable conductor shall be No.12, unless indicated otherwise on the drawings. Wire sizes No. 8 and larger, and all wire sizes utilized for control or instrumentation, shall be stranded. All sizes called for in the specifications or shown on the drawings are American Wire Gauge sizes.

1. No wire smaller than No.12 shall be used for any branch circuit unless noted otherwise on the drawings. Larger sizes shall be used where required or indicated on the drawings. If the single distance from the panelboard to the first device exceeds 50 feet, the minimum size for this run shall be No. 10 AWG with the minimum between devices as No. 12 AWG.

D. All sizes of wire and cable furnished and installed under these specifications shall be color-coded with a separate color for each phase and neutral used consistently throughout. Each conductor shall have factory color-coded insulation. As an alternative, wire sizes No.8 and larger shall have black insulation and shall be color-coded with waterproof phasing tape at each termination, junction box, pull box, etc. All 277/480 volt wiring shall be color-coded yellow, brown, and orange for hot legs (Phase A, B, and C, respectively). All 120/208-240 volt wiring shall be color-coded black, blue, and red for hot legs (Phase A, B, and C, respectively). The grounded neutral conductor of each circuit shall be color-coded white. Grounding conductors shall be color-coded green.

E. All wires and cables shall, as far as practicable in the judgment of the Engineer, be continuous from origin to destination without running splices in intermediate pull boxes, junction boxes, or wireways. At the ends of these wires and cables, only sufficient slack shall be left as may be required for making proper connections. There shall be no unnecessary slack.

F. In connecting wires and cables to apparatus, various methods shall be used depending upon the local conditions as detailed on the drawings. In general, solderless pressure connectors shall be used for terminals, taps, and splices for all wires and cables. Solderless pressure connectors or vinyl-covered steel spring-type connectors shall be securely fastened and shall not loosen under vibration or normal strain. All connections shall be in accordance with manufacturer's recommendations and shall be with connectors approved for the particular connection conditions.

G. Where wires and cables are connected to metallic surfaces, the coated surfaces of the metal shall be polished before installing the mechanical connector. The lacquer coating of the conduits shall be removed where a ground clamp is to be installed.

H. All soldered joints shall be made mechanically strong before soldering and shall be carefully soldered without the use of acid and shall be taped with insulating tape to a thickness equal to that of the insulation.

I. The installation of wires and cables shall include the furnishing and installing of all hangers, racks, cable cleats, and supports that may be necessary to make a neat and substantial wiring installation in all pull boxes, wireways, cable channels, and in such other locations as may be required. Plastic ties shall be used to hold the wires and cables together and to the racks or supports.

J. Each junction box, terminal box, control cabinet, or other terminal location containing a total of 4 or more conductor terminations or splices, shall be equipped with 1 or more terminal boards, as required, for connecting each wire including the spare wires. Each wire terminal shall be permanently marked throughout the entire system using, wherever possible, the notation of the wires given on the manufacturer's wiring diagrams. Sufficient terminal blocks shall be provided to terminate all wires routed to the enclosure including all spare conductors. In addition, the greater of 20 percent or four unused spare terminals shall be provided. All connections for future functions shall be wired to numbered terminal blocks, grouped separate from the terminal blocks in use. Terminal blocks shall be grouped to isolate power conductors from control conductors and to separate AC circuits from DC circuits.

K. Each control, instrumentation, and power cable and conductor shall be marked with the proper feeder symbol or termination number in each manhole, handhole, pull box, wireway, terminal

cabinet, panelboard, switchboard and all additional locations required to provide positive identification. Each conductor shall be marked at each point of termination following final installation.

L. The electrical installation shall maintain suitable isolation between power, control and instrumentation conductors. Approved isolation barriers shall be provided within each pull box, terminal box, wireway, cable tray, handhole, manhole, etc.

3.04 TESTING

A. Upon completion, the Contractor shall provide all necessary instruments and special apparatus to thoroughly test the complete installation and shall conduct all tests that may be required to insure system is free of all improper grounds and short circuits, and that all the feeders are properly balanced. All electrical equipment shall be tested to determine proper polarity, phasing, relay settings, and operation. System shall be checked for quality and completeness in accordance with the provisions of the General Conditions. Any objectionable noise, heating, voltage drop, or excessive current draw, after in operation, shall be identified and corrected.

B. Prior to energization, the electrical system ground resistance shall be tested. Additionally, the insulation resistance of all electrical gear, power feeders, and electric motors shall be measured. Upon completion of all corrective measures required, certified acceptance reports, including tabulations of all initial and final resistance measurements, shall be submitted for approval in accordance with the provisions of the General Conditions.

C. Each motor starter overload element, and each motor circuit protector, shall be selected and adjusted to coordinate with the nameplate full-load current and service factor of the actual motors installed. Improper units shall be replaced. Upon completion of all corrective measures required, certified compliance reports, including tabulation of the actual full load current and voltage measurements for each phase of each motor, together with the nameplate current rating, overload element rating, and motor circuit protector setting, shall be submitted for approval in accordance with the provisions of the General Conditions.

D. System testing shall include complete circuit breaker tests for each power circuit breaker and complete thermal surveys of all new and existing electrical apparatus. Upon completion of all corrective measures required, certified acceptance reports, including satisfactory infrared photographs, shall be submitted for approval.

3.05 SPARE PARTS

A. The Contractor shall furnish, upon completion of the project, one year's supply of all consumable parts utilized within the electrical system, including pilot lights (minimum 12 of each type), fuses (minimum 12 of each type below 100 amps and 6 of each type 100 amps and above), recorder charts, ink tips, etc.

B. A spare lamp supply consisting of a minimum of 24 of each size incandescent, 12 of each size fluorescent, and 6 of each size H.I.D. lamp utilized shall be provided.

3.06 GUARANTEES

A. All materials and workmanship shall be guaranteed to be free from defects. Any part of the system considered defective by the Engineer within the guarantee period shall be immediately replaced or corrected to the Engineer's satisfaction without further expense to the Owner.

B. Upon final completion, the Contractor shall furnish certification from each equipment manufacturer that all equipment has been installed in accordance with the requirements of these specifications, is ready for permanent operation, and that nothing in the installation shall render the warranty null and void.

END OF SECTION

© 2019 CDM Smith
All Rights Reserved

THIS PAGE INTENTIONALLY LEFT BLANK

© 2019 CDM Smith
All Rights Reserved

SECTION 16100
UNDERGROUND ELECTRICAL WORK

PART 1 GENERAL

1.01 DESCRIPTION OF WORK

A. In general, the work specified in this section of the specifications includes the furnishing of all labor, material, and services necessary to install the following materials, including all fees, charges, and permits necessary.

B. The Contractor shall furnish all materials for, and shall build, a complete underground system of raceways for underground electrical distribution and telephone systems, including PVC conduits embedded in concrete, steel conduits embedded in concrete, manholes, handholes, and accessories, all as indicated on the drawings and specified herein.

C. Earth and rock excavation and backfill, concrete masonry, concrete reinforcement, and construction joints shall be as specified elsewhere under the appropriate headings.

PART 2 PRODUCTS

2.01 UNDERGROUND DUCT BANKS

A. Underground ducts shall be PVC Schedule 40.

B. Conduits shall be encased in reinforced concrete envelopes using Class C concrete as specified in the division of these specifications entitled CONCRETE and as indicated on the drawings.

C. A minimum 3" wide polyethylene warning tape, red for electrical and orange for telephone, with imprinted legend, shall be installed in the backfill above all underground duct banks. Warning tape shall be Allen Terra Tape, or equal and shall be guaranteed not to discolor.

2.02 MANHOLES AND HANDHOLES

A. Manholes and handholes shall be constructed of reinforced Class A concrete as specified in the division of these specifications entitled CONCRETE. Manholes and handholes, including conduit entrance areas, shall be of finished concrete installation.

B. Precast manholes and handholes shall be reinforced concrete, minimum 4,500 psi 28-day compression strength. Complete manufacturer's design and construction specification data, including concrete strength test reports, shall be provided.

C. Manhole and handhole frames and covers shall be aluminum. Manhole covers shall be sectional such that each section may be removed by hand, without the requirement for mechanical lifting equipment.

D. Manholes and handholes shall be of size and construction as indicated on the drawings and shall be suitable for minimum H-20 traffic loading.

2.03 CABLE SUPPORTS

A. All manholes and handholes shall be furnished with cable racks, cable hooks, and insulators to support effectively all cables indicated for present and future installation.

B. Cable racks shall be made from steel channels with ample strength to support cables. All cable rack hardware, including cable hooks, shall have hot-dipped galvanized finish.

C. Insulators shall be made of high grade, dry process porcelain with smooth, glazed surfaces.

PART 3 EXECUTION

3.01 DUCT BANK CONSTRUCTION

A. Approved type precast concrete or plastic spacers shall be used for spacing the ducts and conduit during installation. Ducts or conduits and spacers shall be firmly wired together and anchored in place before the concrete is poured. Duct line couplings shall be staggered by rows.

B. Concrete envelopes shall be constructed to the dimensions indicated on the drawings. Trench bottoms shall be tamped firm and even and suitably braced side forms shall be employed. Concrete shall be installed in a continuous pour to eliminate joints.

C. Conduit runs shall follow straight lines as far as possible; where deviation from a straight line becomes necessary, bends shall be of sufficient radius for the proper installation of cable. Bends in excess of 45° shall be long radius (minimum 2 times standard factory elbow radius) rigid steel.

D. Completed runs shall permit passage through them of a mandrel not less than 12" long and a diameter 1/4" less than the normal size.

E. In manholes and handholes, PVC conduits shall be terminated with approved end bells. Rigid steel conduits shall be terminated with insulated grounding bushings. All unused conduit openings shall be suitably plugged or capped.

F. Conduits shall maintain a continuous slope between manholes and handholes. Conduits shall be sloped downward toward manholes and handholes and away from buildings and structures. The degree of slope shall be as liberal as permitted by the finished grading in order to prevent water from entering junction boxes at buildings and structures under conditions of maximum ground saturation. The minimum slope shall be 1%.

G. The entire underground conduit system shall be watertight. Each conduit shall be sealed to exclude moisture at each building and structure termination.

H. The high point of the conduits between manholes and handholes shall have not less than 18" of cover below the finished ground grade.

I. Approved warning tape shall be installed in the backfill above all underground duct banks. Unless indicated otherwise, warning tape shall be installed 12" below the finished ground grade.

3.02 MANHOLE AND HANDHOLE INSTALLATION

A. Manholes and handhole frames shall be set so that the completed installation will result in a proper alignment of the outside cover with the roadway or other surrounding areas. Unless indicated otherwise, manholes and handholes in traffic areas shall be installed flush and non-traffic areas shall be installed 6" above final grade.

B. A ground rod shall be driven into the ground so as to project 6" above the bottom of each manhole and handhole. Connect all grounding wires and all manhole or handhole hardware to the ground rod.

3.03 CABLE SUPPORTS

A. All manholes and handholes shall be furnished with cable racks, cable hooks, and insulators to support effectively all cables indicated for present and future installation. Racks shall be firmly anchored to walls. A minimum of 2 cable racks shall be installed on each wall.

B. Insulators shall fit hooks in such a manner as to prevent wobbling and ensure minimum movement.

END OF SECTION

© 2019 CDM Smith
All Rights Reserved

THIS PAGE INTENTIONALLY LEFT BLANK.

© 2019 CDM Smith
All Rights Reserved

SECTION 16150
ELECTRIC MOTORS

PART 1 GENERAL

1.01 DESCRIPTION OF WORK

A. In general, the work specified in this section of the specifications includes the furnishing of all labor, material, and services necessary for the installation and placing in operation of all electric motors indicated or required for the proper operation of all mechanical equipment installed.

1.02 SUBMITTALS

A. Motor manufacturers' product literature, nameplate data, and outline drawings shall be incorporated into the appropriate shop drawing submittals of all associated equipment. Additionally, manufacturers' test reports shall be provided for each motor 100 hp and above.

PART 2 PRODUCTS

2.01 GENERAL REQUIREMENTS

A. All electric motors shall be built in accordance with current NEMA, IEEE, ANSI, and AFBMA Standards where applicable. Each motor shall be of the type and quality described by these specifications and/or as indicated on the drawings, fully capable of performing in accordance with the manufacturer's nameplate rating and free from defective material and workmanship.

B. Electric motors shall be of sufficient capacity to operate the driven equipment, under all load and operating conditions, without exceeding 85% of the motor's nameplate horsepower rating with service factor, and with-out exceeding its rated temperature limits.

C. Electric motors for variable speed applications shall be designed for operation at the rated maximum speed and at reduced speeds throughout the variable range, without overloading. Each variable speed motor shall be compatible with all associated control equipment and operating conditions including increased electromagnetic noise (harmonics).

1. Each motor for variable speed operation shall be equipped with internal temperature detectors, in addition to all accessory equipment recommended by the variable speed equipment manufacturer.

2. Electric motors for variable frequency drive applications shall be inverter duty rated in accordance with NEMA MG1 Part 31, and shall be capable of being continuously pulsed at the motor terminals with a voltage of 1600 VAC.

D. Unless indicated otherwise or required by the specific application, all electric motors shall be suitable for continuous operation at maximum load and required starting duty, in a 40°C ambient temperature, at an altitude not to exceed 3,300', in a moist and corrosive atmosphere.

E. Where indicated, or necessary to meet noise level requirements, electric motors shall be designed for quiet operation. Unless indicated otherwise, when operated at nameplate voltage

and frequency the average overall sound pressure level on the A scale shall not exceed 85 ±3 decibels 5' from the motor, as measured in accordance with NEMA Standards.

F. All motors shall be furnished with permanent, highly visible stainless steel nameplates. Nameplates shall include all motor ratings, special features, and accessories.

G. All motors shall be furnished with oversize main terminal boxes. Motor terminal boxes shall be gasketed and shall allow rotation to accommodate conduit entrance. Motor terminal boxes shall be equipped with grounding lugs.

H. All motors shall be equipped with lifting lugs. All motor enclosures shall be equipped with stainless steel screens for all openings in accordance with NEMA Standards for guarded construction.

I. Motor output shafts shall be suitable for connection as required. Vertical hollow-shaft motors shall be equipped with non-reverse ratchets to prevent backspin.

J. Unless indicated otherwise, AC induction motors shall be manufactured by Nidec, U.S. Motors, or pre-approved equal.

2.02 SQUIRREL-CAGE INDUCTION MOTORS

A. General:

1. These specifications are intended to cover the functional requirements, features, and general construction of induction motors of the squirrel-cage, horizontal, vertical solid-shaft, vertical hollow-shaft, normal thrust, and high thrust type.

2. Each motor shall be IEEE-tested, NEMA-rated, premium efficiency energy-saving design, incorporating increased active electrical material and optimum electrical and mechanical design, to provide maximum operating efficiency and power factor. All motors shall be premium efficiency.

B. Rating:

1. When operated at nameplate voltage and frequency, squirrel-cage induction motors shall be rated normal or high starting torque, as required, low starting current not to exceed 600% full load current, low slip, 1.15 service factor, premium efficiency, and continuous duty at rated horsepower and rpm, with open drip-proof, weather-protected Type 1, totally-enclosed, fan-cooled, or explosion-proof construction, as indicated. Temperature rise shall be in accordance with NEMA Standards for the design employed.

2. Unless otherwise indicated, single speed, three phase squirrel-cage induction motors less than 50 HP shall be 200-230/460 volt, 3 phase, 60 hertz. Multi-speed motors, and motors 50 HP and larger shall be single voltage, as required.

3. Single phase squirrel-cage induction motors shall be split-phase or capacitor-start, rated 115/230-208 volt, 1 phase, 60 hertz.

C. Electrical Characteristics:

1. Each motor shall be suitable for full voltage starting and non-injurious heating when operated on power systems with a variation in voltage of not more than ±10% nameplate rating and a variation in frequency of not more than ±5% nameplate rating.

2. Locked rotor torque shall be at least 125% full load torque at 100% rated voltage. Output torque shall exceed the maximum full load torque requirements of the driven equipment by at least 20% throughout the full operating range of the driven equipment, from start to full load. Locked rotor torque, breakdown torque, and locked rotor currents shall be in accordance with NEMA Standards for the design employed.

3. Open drip-proof and WP-1 motors shall have a non-hydroscopic Class B insulation system treated with a minimum of 2 extra dips and bakes using 100% solid epoxy varnish.

4. TEFC and explosion-proof motors shall have a non-hydroscopic Class F insulation system and shall operate with a Class B temperature rise.

D. Mechanical Characteristics:

1. Motors, frames, and end shields shall be cast iron or heavy fabricated steel of such design and proportions as to hold all motor components rigidly in proper position and provide adequate protection for the type of enclosure employed. TEFC and explosion-proof motors shall be severe duty, all cast iron construction.

2. Windings shall be adequately insulated and securely braced to resist failure due to electrical stresses and vibrations. Winding and insulating materials shall consist of one or more of the following as dictated by the motor design: silicone rubber, polyester film, synthetic varnish, or glass cloth.

3. The shaft shall be made of high grade machine steel, or steel forging, of size and design adequate to withstand the load stresses normally encountered in motors of the particular rating. Bearing journals shall be ground and polished.

4. Rotors shall be made from high grade steel laminations adequately fastened together and to the shaft. Rotor squirrel-cage windings may be cast aluminum or bar type construction with brazed end rings.

5. Motors shall be equipped with vacuum degassed anti-friction bearings made to AFBMA Standards and be of ample capacity for the motor rating. The bearing housing shall be large enough to hold sufficient lubricant to minimize the need for frequent lubrication, but facilities shall be provided for adding new lubricant and draining out old lubricant without motor disassembly. The bearing housing shall have long, tight running fits, or rotating seals to protect against the entrance of foreign matter into the bearings or leakage of lubricant out of the bearing cavity. Thrust bearings shall be of ample capacity to carry the maximum thrust load of the driven equipment and the total weight of all revolving parts. Bearings of high thrust motors will be locked for momentary upthrust of 30% downthrust. All bearings shall have a minimum life rating of 5 years in accordance with AFBMA life and thrust values.

a. For motor speeds 1800 rpm and below, double sealed bearings shall be used. The grease fitting shall be removed and a plug inserted so that the motor does not get inadvertently greased.
b. For motor speeds above 1800 rpm, single shielded bearings shall be installed with the shields facing the outboard (grease supply) side and open on the inboard (stator) side. Zert fittings shall be installed at the 12 o'clock position when viewed axially. Grease escape valve or purge plug shall be installed at the 6 o'clock position.
c. The entry and exit paths for new and purged grease, respectively, shall enter and leave the bearing cavity on the outboard (shielded) side of the bearing (termed *conventional* grease flow design).
d. The motor manufacturer shall provide a procedure for initial greasing and for re-greasing the motor bearings. Specific intervals with a specified quantity of grease per the bearing manufacturer's recommendations are required.

E. Accessories:

1. Each motor shall be equipped with all necessary accessories as recommended by the manufacturer for the intended service.

2. Each motor shall be equipped with space heaters. Motor space heaters shall be low voltage, 120 volt, single phase, with the leads brought out to the motor conduit box.

3. Each motor shall be equipped with thermal winding protection. Motor shall be equipped with two normally closed automatic reset thermostats imbedded in the stator winding, between phases, and connected in series. The two leads shall be brought to the motor conduit box.

PART 3 EXECUTION

3.01 GENERAL

A. Electric motors shall be supplied with the driven equipment, unless specified otherwise.

B. All fittings, bolts, nuts, and screws shall be plated to resist corrosion. Bolts and nuts shall have hex heads. All machined surfaces shall be coated with rust-inhibitor for easy disassembly.

C. The entire surface of each motor shall be treated with a final coating of chemical-resistant, corrosion- and fungus-protective epoxy enamel, over a red primer.

3.02 INSTALLATION

A. Motor Connections:

1. All motors shall be connected to the conduit system by means of a short section (18" minimum) of liquid tight flexible metallic conduit.

2. All motor feeders shall include a grounding conductor installed within the motor feeder conductor raceway, continuous from the motor starter to the motor conduit box. The motor feeder grounding conductors shall be properly terminated on each end with approved ground lugs and clamps.

3. Insulated mechanical polaris connectors shall be used for all motor feeder conductor connections to the motor leads. Connectors shall be UV rated, abrasion and chemical resistant, and specifically designed for the conductor material, stranding, etc.

3.03 TESTING

A. All motors shall be tested prior to shipment in accordance with the standard short commercial test procedures to include the following: no-load current, check-current balance, winding resistance, measure air gap, high potential, and bearing inspections.

B. Upon completion, the Contractor shall provide all necessary instruments and special apparatus to thoroughly test the complete installation and shall conduct all tests that may be required to insure system is free of all improper grounds and short circuits. All electrical equipment shall be tested to determine proper polarity, phasing, relay settings, and operation.

C. Prior to energization, the insulation resistance of each motor shall be tested in accordance with the motor manufacturer's recommendations. Upon completion of all corrective measures required, certified acceptance reports, including tabulations of all initial and final resistance measurements, shall be submitted for approval.

D. Each motor starter overload element, and each motor circuit protector, shall be selected and adjusted to coordinate with the nameplate full-load current and service factor of the actual motors installed. Improper units shall be replaced. Upon completion of all corrective measures required, certified compliance reports, including tabulation of the actual full load current and voltage measurements for each phase of each motor, together with the nameplate current rating, overload element rating, and motor circuit protector setting, shall be submitted for approval.

END OF SECTION

© 2019 CDM Smith
All Rights Reserved

THIS PAGE INTENTIONALLY LEFT BLANK

© 2019 CDM Smith
All Rights Reserved

SECTION 16200
ENGINE GENERATOR – DIESEL

PART 1 GENERAL

1.01 EQUIPMENT DESCRIPTION

A. Self-contained diesel engine-generator set

1. Complete skid mounted genset package unit consisting of the following for a complete and operating system
   a. Engine
   b. Generator
   c. Auxiliary systems
   d. Unit control panel
   e. Sound attenuated aluminum enclosure
   f. Stainless Steel Silencer
   g. UL 2085 listed fuel storage tank

2. Manufacturers:
   a. Diesel engine-generators shall be the specified model of the latest commercial design with all necessary controls.
   b. The manufacturing facility shall be ISO 9001 certified
   c. The three preapproved vendors by purchasing are Ring Power (Caterpillar), Zabatt Power Systems (AKSA), and Cummins.
   d. Engine-generators shall meet all EPA regulations.

1.02 SIZE

A. 800 kW

1.03 GENERATOR REQUIREMENTS

A. Rating

1. Each engine-generator set shall be capable of producing rated output at rated generator RPM when equipped with necessary operating accessories such as air cleaners, lubricating oil pump, fuel transfer pump, radiator fan, jacket water pump, governor, alternating current generator and exciter.

2. Standby duty rated at 800 EKW, 1000 KVA,

3. Generator shall be brushless type, rated at .8PF, three phase, 60 Hertz, 480 volt, delta connected, 4 wire, 1800 RPM.
   a. 0.8 lagging power factor.
   b. 480 volts standby duty for 480 volt service.
   c. Engine-generators shall have reconnectable leads to enable JEA to get a variety of voltages from the equipment.

4. Unit shall be sized to operate all pumps simultaneously, started in sequence unless specified otherwise. Unit shall be rated such that each pump, upon start-up, will not

experience greater than 20% instantaneous voltage dip, also considering auxiliary power requirements. Responsibility for sizing generator shall lie with the generator supplier.

5. Operating ambient temperature range of 7°F to 105°F

6. Directly connected to the engine flywheel housing with flex coupling.

7. Unit shall be in compliant to UL 2200 labeled.

8. Unit shall be in compliant to NFPA 110.

9. Generator shall be engine driven, single bearing, continuous duty, salient pole, and synchronous type with amortisseur windings. It shall be of the drip-proof type, entirely self-contained with only line leads brought out for loading connections. Generator insulation used shall be NEMA Class H such that generator life will match that of the prime mover. Generator shall be designed so all components are accessible with a minimum amount of labor.

10. The maximum voltage dip (including any instantaneous voltage dip) during starting shall be 20%.

11. A vacuum pressure impregnation (VPI) process shall be utilized on form wound stator windings.

12. The Supplier shall provide a stator coil pitch, coil distribution, and skew to minimize the total harmonic distortion (THD) to less than 5 percent.

13. Stator winding shall be 2/3 pitch (67 percent).

14. An automatic voltage regulator with 3-phase sensing shall be provided. The regulator shall have over excitation protection. A static voltage adjuster shall be provided to use with automatic synchronizer.

15. Voltage regulator shall be modular construction, replaceable as an assembly and shall provide regulation for single unit operation within plus or minus 2 percent from rated voltage at any steady state load between "no load" and "full load."

16. Generator shall have static excitation systems, which shall incorporate silicon control rectifiers to provide alternator field excitation. Static excitation system shall have capacity to provide 150 percent of required excitation at rated load and rated voltage. Static excitation system shall incorporate circuitry to permit voltage build-up from residual magnetism. Field flashing from a separate source is not acceptable.

17. Voltage level and voltage gain control shall be provided and easily accessible for normal operating adjustments. Voltage level control shall have a minimum range of plus or minus 5 percent from rated voltage. Provide voltage adjustment instruction and generator schematic wiring diagram permanently attached on inside of exciter assembly.

18. Certain applications may require the use of a permanent magnet generator. The generator supplier shall be responsible for recommending this type of alternator where circumstances warrant its use.

19. Generator drive shall be free from critical torsional vibration within the operating speed range.

20. Generator neutral shall be closed.

B. Generator Control Panel

1. Automatic generator starting electronic modular control panel in a metal enclosure. Starting section shall automatically start engine upon failure of normal source through starting contacts in automatic transfer switch. Transfer unit shall serve to operate as follows: Failure of normal supply shall cause its voltage sensitive relay to close a normally open contact initiating starting cycle of diesel engine. Closing of this contact shall cause power to be fed to a throttle solenoid, which picks up, opening fuel rack and energizing starting motor through one of its contacts. As generator voltage approaches normal, relay coil in the cranking panel shall pick up, opening starting circuit through one of its contacts, thereby disconnecting starting motor from the rest of the circuit. Lack of oil pressure or over-temperature of cooling system will cause second relay in cranking panel to be energized, as normal alternator voltage is approached, causing starting cycle to be terminated immediately. Should engine fail to start for any reason, a time delay relay in cranking panel limits its cranking period to 30 seconds. A push-button switch mounted on cranking panel shall allow engine to be further cranked at the operator's discretion. Resumption of normal power shall open engine contacts in transfer switch and shall cause engine to shut down after 5-minute delay. Each engine-generator shall have a digital type generator-mounted control panel and shall be supplied with vibration isolators of the type suitable to isolate the control panel from the engine-generator vibration.

2. The control system features shall include the following:
   a. Automatic generator loading and unloading for open load transfer.
   b. Automatic synchronizing - The automatic synchronizing scheme shall be designed to select and synchronize the engine-generator unit across each switch.
   c. Dead bus closing system
   d. VAR/PF control
   e. Engine Speed Control
   f. Isochronous or droop mode
   g. Automatic/Manual Start-Stop with the following safety shutdowns
      1) Over-speed protection and indicator
      2) Low lube oil pressure protection and indicator
      3) High coolant temperature protection and indicator
      4) Over-crank protection and indicator
      5) Low coolant level protection
      6) Engine Control Switch (Three-Position: Stop - Manual - Auto)
      7) Indicator/ Display Test Switch
      8) Digital Voltage Adjust Potentiometer (plus 10 percent - 25 percent Range)
   h. AC Metering
      1) AC Volt Meter
      2) AC Amp Meter
      3) Frequency Meter:
      4) AmmeterVoltmeter Phase Selector Switch Four Position (Phase 1,2,3, and Off)
   i. All engine-generator units shall be capable of interfacing with JEA SCADA equipment.

j. Two normally open dry contacts that will close when the engine is running and open when engine is stopped.
k. Generator control section shall be 600 volt, with amperage sized to match pump station service and shall include a 3 pole generator circuit breaker with shunt trip. Shunt trip shall be actuated by any of the engine safety devices.
l. Emergency stop push button to shut the engine down regardless of the switch position.
m. Fuel pressure monitored by ECU I control panel.
n. Tachometer.
o. Fuel leak detection.
p. Dry contacts rated 120 volts, AC, 5 amps shall be provided for annunciation of all safety shutdowns, and all control panels mounted visual indicators. Safety shutdowns and control panel visual indicators shall include all items required by NFPA110 Level 1. Dry contacts shall close on safety shutdown or when visual indicators are illuminated and open when the condition is cleared. In addition a common alarm (generator alarm) contact shall be provided that closes when any of the above mentioned contacts close. The common alarm contact shall also close anytime the generator breaker is not closed. The common alarm contact shall open when all conditions are cleared. In accordance with the NFPA requirements, alarm module shall be a dc system.
q. All items shall be included on the control panel, assembled, wired, and tested in the supplier's shop.
r. The control panel shall have adequate clearance from the engine to permit engine maintenance without moving the control panel.
s. Automatic Exerciser:
    1) Supplier will provide an Automatic Exerciser for each unit. This exerciser will automatically start, transfer load, run, transfer load back, and cool down unit on a weekly basis for a minimum of one hour for water treatment and waste water treatment facilities. Operating schedule must be fully adjustable both on length and frequency. The Automatic Exerciser must be provided by the same manufacturer who provides the controls and is a part of the controls package.

1.04 ENGINE REQUIREMENTS

A. Diesel engine shall be heavy-duty type to meet EPA Regulation.

B. Arranged for direct connection to an alternating current generator and shall be the product of a manufacturer regularly engaged in the building of full diesel engines. Engine shall be a current model which has been in regular production for at least three years. Engine shall develop sufficient brake horsepower, net at rated RPM, corrected to sea level barometric pressure (29.92 in. HG) and 110 degrees F, to operate generator continuously at its rated output with all losses included without undue heating, vibration or wear. Diesel engine shall be water cooled four cycle compression ignition diesel. The engine exhaust manifold shall have an expanded metal guard spread sufficiently away from hot parts

C. Engine shall meet the required capacity when operating on ultra-low-sulfur no. 2 diesel fuel.

D. Engine shall be supplied with electronic governor capable of .25 percent speed regulation from no load to full rated load for isochronous regulation of engine speed. Belt-driven or velocity governors are not acceptable.

E. Engine shall be equipped with a pressure lubrication system supplying oil to all surfaces requiring lubrication. Circulation shall be by a positive displacement pump. Lubrication system shall include a full flow strainer, oil filter, and an oil cooler of sufficient capacity to properly cool all lubrication oil circulated, and level indicator or dipstick.

F. Engine shall have an individual mechanical injection pump and injection valve for each cylinder, any one of which may be removed and replaced from parts stock. Injection pumps and injection valves shall not require adjustment in service. Fuel injection pumps shall be positive action, constant-stroke pumps, actuated by a cam driven by gears from the engine crankshaft.

G. Fuel lines between injection pump and valves shall be heavy seamless tubing; and, to eliminate irregularity of fuel injections, shall be of the same length for all cylinders,

H. Fuel system shall be equipped with replaceable fuel filter elements which may be easily removed without breaking any fuel line connections or disturbing the fuel pumps or any other part of the engine. Provide easily serviceable fuel/water separator/filter ahead of other fuel filters.

I. All fuel filters shall be conveniently located in accessible housing, ahead of injection pumps so that fuel will have been thoroughly filtered before it reaches the pumps. No screens or filters requiring cleaning or replacement shall be used in injection pump or injection valve assemblies.

J. Engine shall be equipped with a built-in gear-type engine-driven fuel transfer pump, capable of lifting fuel against a head of twelve feet, for supplying fuel through filters to injection pump at constant pressure.

K. Engine shall be provided with suitable safety controls to automatically stop the unit when low oil pressure, water temperature or engine speed exceeds safe limits. Pilot lights shall be provided to visually indicate the cause of engine shut down. Pilot lights shall operate off battery circuit and shall be on engine generator control panel. Provide contacts for remote engine failure annunciation.

L. Engine shall be equipped with radiator and blower fan of sufficient capacity for cooling engine when diesel electric set is delivering full rated load in an ambient temperature of 122 degrees F. Air flow restriction from radiator shall not exceed 0.5 inches H20. Engine shall have a thermostat integral with jacket water circuit to maintain water at proper operating temperature. Engine shall have a belt driven centrifugal type water circulating pump for circulating water through cooling system.

M. Provide one or more engine mounted dry type air cleaners of sufficient capacity to protect working parts of the engine from dust and grit.

N. Engine shall be equipped with an oil I vapor recovery container or box that meets EPA regulations.

O. The intent of the recovery system is to not allow the blow by waste to escape into the atmosphere or soak the radiator coils, as well as be a possible housekeeping issue around the engine generator.

P. Water cooled diesel engine, sized for generator set.

Q. All engine exhaust emissions shall meet EPA requirements for standby power generation.

R. Engine starting system shall include an electric motor start system including dc starting motor, required voltage battery pack and rack, cables, and battery charger.

1. For engine-generator sets rated 750 kW and above, a redundant electric starting motor shall be provided.

S. The batteries shall be of the lead acid type. The battery shall be sized to provide the specified number of starts, cranking time at firing speed (five 10 second cranks) at any ambient between minimum (7 OF) and maximum (105 OF) design ambient temperatures, with final discharge voltage, exceeding minimum control power supply voltage requirements. Batteries shall be lead acid type complete with cables and rack. Battery shall be rated in accordance with requirements of engine manufacturer. Batteries shall be located for easy removal and servicing.

T. Battery Charger:

1. Current limiting battery charger to automatically charge batteries.

2. Charger shall be dual charge rate with automatic switching to boost rate when required.

3. Charger shall be mounted at rear of engine-generator set inside the enclosure.

4. Control wire connection between starting and safety circuits shall be pre-connected before arriving at job site.

5. The service powered battery charger shall float charge the battery pack and shall be solid-state, full wave bridge rectified type, using silicon controlled rectifiers for power control. The battery charger shall be suitable for the required voltage, and current, battery pack type, shall have a dc output circuit breaker, floating voltage equalization, equalizing timer, a ground detection system, a voltage relay to activate low battery voltage alarms at the engine generator control panel, and battery charger failure which shall alarm at the engine-generator control panel.

U. Cooling System:

1. Engine shall be cooled with a unit-mounted radiator cooling system complete with:
   a. radiator
   b. expansion tank
   c. water pump
   d. belt-driven fan
   e. fan guard
   f. thermostatic temperature control
   g. high water temperature cutout
   h. electric jacket water heater

2. The jacket water heater shall be sized for Northeast Florida climate and shall maintain jacket water at 90 F in an ambient temperature of 30 degrees F.

3. The jacket water heater shall be thermostatically controlled, if "acorn" type heaters with nonadjustable thermostats are provided then they shall not be oversized to waste energy or burn up hoses and shall be single phase, 60 Hertz, and applicable voltage.

4. All jacket water heaters hoses shall be silicone type.

5. All jacket water heaters hoses shall have shut off valves at engine, supply and return as to allow maintenance personnel to swap out hoses without draining all the fluids.

6. The radiator shall be sized to handle the cooling of the engine and all other accessories required for proper operation in the North Florida Region.

7. The fan shall draw air over the engine and discharge through the radiator.

8. The radiator coils shall be 100% dipped in Bronze-Glow (husky coil coat) to provide additional protection on coils for all units do to the corrosive atmosphere at JEA water and waste water facilities.

9. The cooling system shall be filled with a permanent antifreeze mixture of 50 percent ethylene glycol type with rust inhibitor.

1.05 ENCLOSURE/ SILENCER

A. Complete diesel engine generator set including control panel, engine starting batteries and fuel oil tank shall be enclosed in a factory assembled water protective, sound attenuated, high velocity hurricane zone aluminum enclosure.

1. Enclosure for units with greater than 250 kW nominal capacities shall be of the walk-in type and shall be of the drop over configuration, suitable for pad mounting or on base fuel storage tanks. Minimum distance from engine-generator and generator to end wall shall not be less than 3'-0" for walk in type enclosures. The complete engine-generator set shall be enclosed in a modular, walk-in type, weatherproof enclosure. The enclosure shall provide 6 ft. minimum head clearance and 24 inches minimum walk around clearance on sides not including radiator. The enclosure will consist of two sidewalls, two end walls, louvers, and roof.

2. The enclosure for units with nominal capacity of 250 kW or less shall be of the non-walk in type and shall be attached to the skid rails or sub base fuel tank at the supplier's shop. The enclosure will consist of two sidewalls, two end walls, louvers, and roof.

3. The enclosure shall be made of anodized marine grade aluminum white panels. Doors shall be lockable by padlock with stainless steel hardware for access to the engine-generator, controls, and accessories. Doors shall also provide easy accessibility for maintenance.

4. Enclosures shall be polished. Supplier will remove all advertising and labels on the exterior of any enclosure. Drop over type enclosures shall have a rubber gasket under it with a rubber cement type adhesive to keep gasket in place to prevent water intrusion into enclosure as well as keep engine fluids from leaking out.

5. The enclosure shall be constructed of removable side panels and end panels. All fasteners and hardware used in construction of the enclosure shall be stainless steel. The enclosure

shall be braced as necessary to support the silencer and designed to withstand 173-mph wind without damage. All bracing and reinforcing members shall be integral to the enclosure. Roof penetrations for the installation of the silencer shall have a gasket to prevent the entrance of rain. The unit shall have continuous hinged side doors each side and continuous hinged doors at control end, equipped with pad lockable hardware for ease of engine maintenance and a three-point latch system. Doors shall be a minimum of 36". There shall be an expanded metal grating or a punched louvered radiator core guard installed - flush with the enclosure panels in front for the radiator grill, and fixed, punched louvered air intake ports on the enclosure sides and rear for proper air circulation within the housing provide lifting eyes and spreader bar reinforcement for crane unloading. A stainless steel handle mounted at the control panel entry door.

6. The louvers shall be screened from the inside to prevent the entry of insects. The enclosure shall have all penetrations gasketed or sealed to prevent the entry of rodents. "Rain Resistant" louvers, as manufactured by Ruskin or Cesco, vertical air turning plenums, or equal shall be provided to prevent the entrance of rain when the unit is operating and the wind direction is at 90 degrees to the air intake at 120 mph. The entire enclosure, except for the louvered openings, shall be provided with noise suppression insulation mechanically secured and fastened.

7. Enclosures shall be provided with noise suppression insulation and air plenums designed to provide a sound level of mechanical noise of 86 dB (A) at 15 feet from any point of the enclosure Minimum of two industrial T8 fluorescent fixtures, spring wound timer light switch, prewired distribution circuit, power panel, and duplex receptacles shall be conveniently provided in the enclosure. The light switch and receptacles shall be provided near generator control panel. Provisions shall be made for mounting batteries and rack inside the enclosure.

8. The generator breaker, generator control panel, distribution (lights, jacket water heater, etc.) power breaker panel, batteries and accessories shall be located in the enclosure. Engine generator supplier shall provide and install a 240/120V transformer adequately sized to handle all enclosure loads from service voltage. Transformer shall feed off of load side of auto transfer switch via a fused or breaker contact located inside ATS.

9. All engine oil and coolant drains shall be piped to outside of enclosure with shutoff valves and shall have threaded stainless steel or aluminum caps. The threaded drain lines shall be labeled on the outside of the enclosure with an aluminum label with aluminum or stainless rivets.

10. Enclosure shall be Phoenix Products, Advanced Manufacturing & Power Systems Inc., or Fidelity Manufacturing.

11. Power Supply:
    a. Each engine-generator set will be provided with a single 480V ac power supply capable of being rewired for lower voltages.
    b. Each engine-generator shall be provided with a power panel sized to power the required loads inside the enclosure by the Supplier as specified herein. The engine starting and controls will operate from the dc-powered batteries specified herein.
    c. Each engine-generator unit shall have a 120V ac, single phase, 60 Hz, panel, and shall be mounted inside the enclosure and shall be isolated from engine-generator vibration. The Supplier shall determine the number of branch circuit breakers required, and

furnish additional of 10% spares. Circuits must be labeled in panel. The power panel shall be prewired to all engine-generator accessories, including but not limited to the following:
1) Enclosure intake and exhaust louvers.
2) Engine-generator starting system (battery charger).
3) Engine electric jacket water heater.
4) Enclosure lights and receptacles.

12. Each engine-generator unit shall be furnished with complete exhaust system including a stainless steel exhaust silencer, all-stainless steel piping, all-stainless expansion joints and accessories as required for a complete operating system.

13. The exhaust silencer shall be chamber type, of all-welded Type 304L stainless steel construction with all stainless steel hardware and fasteners.
    a. The silencer shall be of the side inlet type
    b. Secured in position at no less than 4 points
    c. The silencer shall be supported by a welded stainless angle iron cradle; silencer shall be bolted or strapped to cradle and then bolted to the roof support members mounted inside the roof of the enclosure for a horizontal mounting on top of the enclosure.

14. The silencer shall be sized so that the backpressure at rated capacity of the engine does not exceed one half the supplier's maximum allowable backpressure. The silencer shall be suitable for critical type silencing and shall be a Maxim "Model M5T or equal.

15. All exhaust piping shall be Type 304L, Schedule 10S stainless steel, and the exhaust shall discharge horizontally at the silencer outlet, with 45 degree bevel cut with a stainless expanded metal bird screen.

16. The intake of the silencer shall connect to the flexible exhaust connection by stainless steel pipe. Size as required by engine manufacturer. A flexible stainless steel exhaust adapter, 18 inch minimum length, shall be furnished for mounting between the engine and silencer. The flexible exhaust connection as specified shall mount directly on exhaust manifold and shall be mounted so that no weight is exerted on the manifold at any time.

B. Instrument transformers, instruments, and associated devices

1. Current Transformers. Current transformer mechanical and thermal limits shall be coordinated with the momentary and short time ratings of the switching device with which JEA utilizes. The thermal ratings shall be based on a short-circuit duration of 1 second or greater. The minimum current transformer accuracy rating shall be C200.

2. Voltage Transformers. Voltage transformer shall have a rating of not less than 500 voltamperes on a thermal basis and a capability of withstanding a secondary short-circuit for not less than 1 second. Each transformer shall be provided primary and secondary fuses. The primary fuses shall be adequately rated for the transformer inrush and load current, and they shall have an interrupting capacity equal to or greater than the maximum short-circuit momentary current rating required. The connections from the main buses to primary of the voltage transformer shall be capable of carrying the rated short-circuit current for a minimum of 1 second.

1.06 FUEL SYSTEM / TANK

A. Each engine-generator unit shall be furnished with a complete fuel system, including engine-driven fuel pump, fuel filter/ water separator, engine supply and return line, all stainless steel flexible connections, manual fire-safe shutoff valves, and anti-siphon valve if required by FDEP. All items shall be suitable for the specified fuel. The engine-driven fuel pump shall transfer the fuel from the fuel storage tank to the engine-generator. The fuel system shall be furnished with any equipment required for the engine to supply or return any unused portion of fuel back to the fuel storage tank with any level in the tank.

   1. JEA Maintenance and Environmental Departments must be notified by supplier 30 day, 10 day, and 48 hours in advance of above ground fuel storage tanks shipments greater than 550 gallons. All FDEP above ground fuel storage tank and piping regulations must be followed and required notification given to JEA Project Manager and JEA Maintenance coordinator.

B. All manual stainless steel fire-safe shutoff valves and a filter/ water separator shall be provided on the fuel supply line. The shutoff valve and the filter/ water separator shall be located upstream from the flexible connection at the engine-generator.

C. All manual stainless steel fire-safe shutoff valves on separate standalone fuel storage tanks shall be mounted in the vertical direction at the fuel storage tank just above the pickup tube, before any solenoid or anti-siphon valve and shall be welded.

D. There shall be no shutoff valves on any fuel return line.

E. There shall be an anti-siphon valve above the manual stainless steel fire-safe shutoff valve on all fuel tanks 551 gallons and above as required per FDEP. All anti-siphon valves must be adjustable and sized for exact rise and run of fuel piping per the site conditions.

F. Fuel system shall be equipped with replaceable fuel filter elements, which may be easily removed without breaking any fuel line connections or disturbing the fuel pumps or any other part of the engine.

G. All fuel filters shall be conveniently located, ahead of injection pumps so that fuel will have been thoroughly filtered before it reaches the pumps. No screens or filters requiring cleaning or replacement shall be used in injection pump or injection valve assemblies. The combination fuel filter/separator shall be a manifold unit with shutoff valves and shall be installed on the fuel supply line between the fuel storage tank and the engine driven pump, and shall as manufactured by Racor or equal.

H. The manual fire safe shutoff shall be ball valve of three piece design, with stainless steel body and end caps, stainless steel ball and stem, reinforced Teflon seats and seals, and socket welding ends. Valves shall be of fire safe design and shall utilize secondary metal seating surfaces to ensure shutoff if the primary seats are destroyed by fire. Fire safe ball valves shall be Contromatics or Jamesbury.

I. Fuel oil cooler shall be supplied if the engine fuel system absorbs heat from the unit injectors and surrounding jacket water. The fuel cooler shall be radiator mounted, air-cooled to cool the return fuel as required to maintain proper fuel operating temperature. The cooler shall utilize the

airflow from the radiator fan for cooling. Any coils shall be 100% dipped in Bronze Glow (husky coil coat) to protect against corrosion.

J. Storage tanks shall be insulated secondary containment aboveground storage tank system for flammable and combustible liquids shall be vehicle impact protected and projectile resistant and must meet UL 2085 standards. Tank shall be a steel tank housed in a double containment concrete vault/tank and supplied by Phoenix Products, Convault or Fidelity Manufacturing

1. The tank shall be tested to and listed (and carry UL/ULC labels) for the following:
   a. UL - 2085, two hour furnace fire test and two hour simulated pool fire test for insulated tank.
   b. UL - 2085, insulated and protected secondary containment aboveground tanks for flammable and combustible liquids.
   c. UL - 2085 ballistic and vehicle impact test for protected tank.
   d. The tank shall withstand bullet resistance tests in compliance with UFC Section (79-7)
   e. The tank shall be supplied with flood resistant tie-down brackets/hurricane hold-down restraints.

2. Steel Tank Construction
   a. Steel tank shall be made of 3/16 inch thick steel. The steel tank shall hold the liquid fuel. The tank shall be made in accordance with UL Standard 2085 and ULC Standard S601 covering all aspects of tank fabrication including material specification, fabrication, welding and testing. The steel tank's exterior shall be coated with primer and paint for protection against corrosion.
   b. At the fabrication shop, the tank shall undergo a 24 hour pressure test at 5 psig.
   c. Secondary Containment
      1) The steel tank shall be wrapped with a minimum of 1/< inch thick Styrofoam (foam) insulation and an impervious barrier of 30 MIL high density polyethylene membrane (poly). The 30 MIL poly shall provide containment for a fuel leak through the steel tank. A leak detector pipe terminating in the secondary containment shall provide positive-proof that the tank is not leaking.
      2) The 30 MIL poly, shall shield and protect the steel tank exterior from coming in direct contact with the concrete and thus minimize the potential of tank external corrosion.
   d. Concrete Vault
      1) The tank and secondary containment shall then be encased in a 6 inch thick reinforced concrete vault. The 6 inches of concrete shall be poured on all sides, bottom and top of the tank in one step and be monolithic. This process assures that there are no joints and no heat sinks in the concrete to carry heat from a fire into the primary containment.
   e. All double wall sub-base and standalone tanks coatings shall be approved by a JEA representative.
      1) The double wall sub-base tank shall have a sloped top if exposed to weather conditions as to allow rain water to run off. All sub-base tanks and standalone tanks if mounts are available shall be secured to concrete slab with stainless steel anchor bolts and washers.

K. Engine-generators with nominal capacity of 150 kW and less shall be furnished with a complete fuel system including double wall sub-base type fuel storage tank unless stated otherwise. The tank shall be UL2085 listed, vented, and shall normally be used to store the specified petroleum product at atmospheric pressure.

L. All above ground fuel storage tanks shall meet or exceed UL2085 standards.

M. Rupture basin with 110% capacity.

N. The sub-base fuel storage tank shall have a minimum capacity to provide 75 hours continuous operation of the engine-generator at 100 percent load, up to 500 gallons maximum capacity. The sub-base tank shall be of welded steel construction throughout and shall be constructed to permit access to the electrical stub up area.

1. 75 hour capacity at 100% at full load up to 150kW gensets.

O. Engine-generator greater than 150kW capacity may be furnished with an approved above ground fuel storage tank with a minimum storage capacity to provide 60 hours continuous operation of the engine-generator at 100 percent load.

1. 60 hour capacity at 100% at full load above 151 kW gensets.

P. The fuel storage tank shall be provided with the following items:

1. Vent cap
2. Primary Vent shall not exceed height of enclosure per sub base tanks.
3. Emergency vents
4. EFG-80001 Greenleaf fuel level gauge
5. EFC-420.1 4-20mA data converter
6. Manual fuel stick with gallons to inch laminated conversion chart

Q. The fuel storage tank shall be provided with the following connections:

1. Fuel supply
2. Fuel return
3. Fill with pad lockable cap and overspill containment
4. Back up mechanical Kruger fuel level gauge
5. Vent
6. Primary tank emergency vent
7. Low level switch
8. Leak detection
9. Secondary tank emergency vent
10. Secondary tank Mechanical Krueger leak gauge

11. Placard set stating size, fuel fill, vent, emergency vent, combustible, No smoking and Diesel on two sides and near fuel fill.

R. The fuel storage tank shall have controls that include but not limited to the following:

1. Greenleaf Solar Gauge EFG-8000-I with EFC -420.1 4-20 mA data converter. The gauge shall monitor fuel level in gallons, interstitial leak, hi, and low fuel level.
   a. The EFC-420.1 4-20 mA data converter shall be mounted inside the generator control panel and shall be wired to the EFG-800I gauge and output feeds to SCADA shall include two sets of twisted pairs wires (TSP#18 Belden 3072F Twinax).
   b. All electrical runs shall be in either rigid or non-metallic liquid tight conduit.
   c. The EFG-8000-I gauge shall be mounted on the outside of the enclosure if on a base tank less than 500 gallons and at fuel fill end. All penetrations through enclosure shall be weather tight. For no or low light conditions EFG-12V is required for the EFG-8000-11 gauge.
   d. For all standalone fuel storage tanks up to 3000 gallons the EFG-8000-I gauge shall be mounted on the fuel level probe nipple at the fuel fill end of the fuel tank. All conduits going from the EFG-8000-I gauge to the EFC-420.1 data converter in the generator control panel shall be aluminum grade with aluminum or stainless unistrute with clamps securely attached to the concrete slab. No penetrations shall be made in to the above ground fuel storage tank.
      1) For tanks greater than 3001 gallons the EFG-8000-I gauge shall be mounted at eye level on the end of the tank at the fuel fill end. All conduits going from the EFG-8000-I gauge to the EFC-420.1 data converter in the generator control panel shall be aluminum grade with aluminum or stainless unistrute with clamps securely attached to the concrete slab. No penetrations shall be made in to the above ground fuel storage tank.

2. Level gauge, capable of measuring the fuel level without the engine running.

S. Tank fill connection and level gauge shall be accessible for personnel at ground level through a lockable door in or outside the enclosure. A fill spill containment box shall be sized for 5-10 gallons and provided for containment of spillage during tank fill.

1. Pad lockable overflow fuel fill port and caps with stainless steel hasp.

2. Spring type plunger fuel fill port drain

T. A suitable sized vent connection and vent cover shall be provided for the storage tank vent. The vent cover shall be installed outside the enclosure. The cover shall have an aluminum body, screen over the outlet, and shall prevent rain from entering the vent line.

U. A suitable sized emergency vent connection and emergency vent shall be provided for the primary and secondary fuel storage tank. Each emergency vent shall be installed outside the enclosure and shall be designed as required to relieve excessive internal pressure caused by fire exposure.

V. Primary vent shall not exceed height of enclosure per sub base tank and not block engine exhaust pipe.

W. All flexible diesel fuel piping inside enclosure or at engine-generator shall meet SAE 100R17 hose with stainless connections to prevent against corrosion and fire. All threaded connections shall utilize Hercules Chemical Company Inc. Multipurpose heavy Teflon "Tape Dope" and "Megaloc and or Real-tuff.

X. The diesel fuel piping shall be standard weight (Schedule 40) 316 stainless steel with socket welded fittings per ASTM standards. At the option of the supplier, use Schedule 40 316 stainless steel with welded fittings. All piping shall be welded and done by a certified pipe welder. Where threaded union is required use Hercules Chemical Co. "Megaloc or Real-tuff all-purpose pipe dope on all stainless steel threaded connections. Vendor/ Contractor must warranty all piping connections to be free of any leaks, drips or weeping for one year. As an alternative, flanged fittings with petroleum grade gasket may be used in lieu of a union.

Y. Above ground fuel storage tanks that have fill box openings over 60 inches above grade shall have aluminum or stainless steel stairs and platform at the fuel port. Larger base tanks/ enclosures that have a walk-in type enclosure shall have access stairs or ladders that are located on two sides of the enclosure I base tank made of aluminum or stainless steel. The stairs/ platform shall be secured to concrete slab using stainless anchor bolts and washers.

Z. Supplier shall provide 90% of fuel for rated tank capacity for any and all turnkey installations by supplier. Fuel shall be number 2 off road ultra-low sulfur diesel. Fuel delivery shall take place prior to load bank test. Supplier shall treat fuel with Marine DEE-ZOL as state by product manufacture Bell Performance Inc.

1.07 SHOP PAINTING

A. All components of each engine-generator unit, including engine, fuel storage tank (if applicable), alternator, piping, ad valves shall be shop primed and finish painted prior to shipment to the site. The paint shall be suitable to an outdoor environment and shall be approved by JEA. Stainless steel, nonferrous, and nonmetallic surfaces shall not be painted.

1. One quart of finish paint and brush shall be provided with each equipment package for field touchup painting.

2. Fuel storage tank with ferrous metal (base tanks) shall be surface prepared to protect all surfaces from corrosive environment at JEA facilities. Metal shall be solvent cleaned on all surfaces to be coated utilizing approved system by JEA Facilities Operations. The entire pipe fittings and nipples on the tank shall be powder-coated to protect them from corrosion.

1.08 SHOP TESTING

A. The drive and generator shall be completely factory assembled and tested by the Supplier to prove that they are assembled correctly, and capable of meeting the net generator output kVA rating. All other components and support systems shall be thoroughly inspected by the Supplier prior to shipment. All control system shall be tested to verify correctness of assembly and operation, applicable high potential test before and after load runs, and applicable standard tests. The integrity and proper connection of all electrical circuits shall be verified.

B. The tests shall consist of specified capacity loading changes (25 percent, 50 percent, 75 percent and 100 percent of primary duty kW) under a .8 power factor reactive testing to be performed at the factory for a minimum of 4 continuous hours total, and demonstrate that each safety

shutdown device is working properly. The Supplier shall submit copies of the onsite tests prior to start of warranty. Shop tests shall be performed in northeast Florida.

C. The Supplier shall notify JEA at least one week prior to the shop test. JEA reserves the right to witness the shop test.

D. If such tests indicate specified performance has not been met, the Supplier shall pay the cost of all corrective measures and additional tests until such time as tests demonstrate that specified performance has been met.

1.09 OPERATING CONDITIONS:

A. Each engine-generator unit will be used as a power unit when the utility-supplied power fails, and shall provide the specified minimum nominal standby capacity for the duration of 60 - 75 hours minimum at full load.

B. The unit shall be capable of being started, synchronized to the system and loaded to the full rating of the unit without dependence upon ac auxiliary power for a minimum of five minutes. The voltage shall remain +/-10% unless stated otherwise.

C. Each engine-generator unit shall be suitable for "black start" conditions and shall automatically start, and connect to electrical loads when initiated from an automatic transfer switch.

D. Each engine-generator shall be supplied with monitoring the following: generator run, generator fault, normal power available, emergency power available, fuel level, and leak alarm.

E. Fuel tanks for the engine-generators with nominal output capacity of greater than 150 kW can be furnished from an approved above ground tank supplier UL 2085. Fuel for engine-generators with nominal output capacity of 150 kW and less will be supplied fuel from a sub-base type fuel storage tank UL 2085.

1.10 AUTOMATIC TRANSFER SWITCHES

A. Delayed Transition, 3-pole, double throw type, rated 480 volts A.C. amperage to match service size as indicated on the drawings. Switch shall be electrically operated, mechanically held type switch and shall have Transient Voltage Surge Suppressor (TVSS) protection. Switch shall be equipped with full relay protection and shall transfer load to emergency source when one of more of the 3-phase voltage falls below 85 percent. It shall automatically return load to normal when all normal line voltages have been restored to 90 percent or more.

B. Automatic transfer switch shall be equipped with an engine starting contact and with an emergency lockout relay to prevent switch from closing load on emergency generator until proper voltage and frequency have been reached. Switch shall be equipped with one time delay, adjustable from 1/6 to 180 seconds in the engine starting contact circuit to prevent contact from closing until a predetermined delay has occurred. Switch shall be equipped with another time delay relay adjustable from 1/6 to 180 seconds which will, after a predetermined time, allow the emergency generator circuit to remain closed after normal power has been restored to at least 90 percent voltage. Switch shall be equipped with a time delay to run engine for 5 minutes at no load on retransfer to normal power source.

C. Provide the following dry contacts for remote monitoring:

1. ATS in Normal Position

2. ATS in Emergency Position

3. ATS Normal Source Available

4. ATS Emergency Source Available.

D. Brand: Transfer switch shall be Zenith Model ZTS-D/L, ASCO Series 4000 (with exception class IV stations shall be 7000 series with Bypass-isolation), Russelectric RTS-3 type delayed transfer switch with microprocessor controls.

1. Where an ASCO 7000 series is specified or equal, a two-way bypass-isolation switch shall provide manual bypass of the load to either source and permit isolation of the automatic transfer switch from all source and load power conductors. Bypass to the load-carrying source shall be accomplished with no interruption of power.

2. The bypass handle shall have three operating modes: “Bypass to Normal”, “Automatic”, and “Bypass to Emergency”. The “Open” mode shall completely isolate the automatic transfer switch from all source and load power conductors. When in the “Open” mode, it shall be possible to completely withdraw the automatic transfer switch for inspection or maintenance to conform to code requirement without removal of power conductors or the use of any tools. When the isolation switch is in the “Test” or “Open” mode, the bypass switch shall function as a manual transfer switch.

E. Enclosure: Transfer switch enclosures shall be available in UL NEMA 1, NEMA 3R and NEMA 3RX.

1. For exterior applications of the ATS a UL Type Secure NEMA 3RX (316 Grade Stainless Steel) enclosure of the secured type shall be provided. The control panel shall be housed inside of the cabinet on an inner full height door/panel away from vandalism and the corrosive environment. All electrical penetrations into the ATS shall be from the bottom of the enclosure. The outer weather tight full height secured door shall be constructed with a closed cell gasket door, a three-point pad lockable latch exterior door arrangement, and a continuous hinge the full height of the door.

2. Supplier shall provide strip heaters in all ATS enclosures.

F. Warranty: 5 years

1.11 START UP AND TESTING:

A. Prior to acceptance of the installation, each unit shall be tested at the job site to show it is free of any defects and will start automatically and be subjected to full resistive load test at rated capacity, 1 power factor, with enclosure using dry type load banks. Supplier shall provide startup personnel to train personnel and witness the tests. Testing by Supplier shall be for a period of four continuous hours and shall be done in the presence of the JEA representative.

1. The supplier shall furnish the services of one or more technical service representatives to assist in the installation of new engine-generators. The service representatives shall be

technically competent; factory trained; experienced in the installation and operation of the equipment; and authorized by the supplier to perform the work stipulated.

2. Supplier will start up and service the engine-generators utilizing its own technicians and will not subcontract any start up work out.

3. For new engine-generators, the Supplier shall also furnish the field services of direct representatives of the manufacturers of auxiliary equipment which has rotating parts, or which may require field inspection and adjustment to assure proper operation.

4. The technical service representatives shall furnish written certification to JEA that equipment has been inspected, adjusted, and passed load bank test by them or under direction and that it is ready for service. All written certification must be duplicated and one copy left onsite in the Manual-Pak maintenance folder and the other electronically sent to the JEA Project Manager in Facilities Operation and Maintenance.

5. The duties of technical service representatives may include, but may not be limited to the followings:
   a. Providing technical advice to assist a contractor in installing the equipment.
   b. Inspection and testing the equipment after installation and directing any changes or adjustments required to assure proper operation. The engine-generator unit shall be field tested by the field service representative(s) for compliance with the specified requirements. The tests shall include but not necessarily limited to the followings:
      1) Ability to start and synchronized to an energized bus.
      2) Ability to start connects to and brings up a dead bus.
      3) Net output at design conditions.
   c. Providing technical direction during startup and initial operation of the equipment.
   d. Directing the correction of any design or manufacturing errors.
   e. Instructing JEA's personnel in the operation and maintenance of the equipment.
   f. Providing services required as a condition to providing warranties and guarantees specified.

6. Service Representatives and Technicians required for installation and start-up are included in the initial engine-generator pricing.
   a. Technical Service Representative includes all expenses including, but not limited to, small tools and consumables, travel, meals, per diem, salaries, benefits, overheads, etc.

7. The load bank will be capable of definite and precise incremental loading and shall not be dependent on the generator control instrumentation to read amperage and voltage of each phase. Rather, the test instrumentation will serve as a check of the generator set meters.

8. Correct amount and grade of crank case oil, coolant, and other fluids necessary for initial testing and operations shall be supplied with each unit.

9. On completion of the installation, the initial inspection for correct installation and start-up shall be performed by a factory-trained representative of manufacturer. At the time of start-up, operating instructions and maintenance procedures shall be thoroughly explained to the operating personnel.

a. In addition to equipment specified, each generator shall be equipped with all standard equipment as specified by the manufacture for this model and shall include but not be limited to the following necessary items:
   1) Initial filling of oil and antifreeze.
   2) Shrink wrap applied to the product to ensure a clean finish.
   3) During the start-up, the technician shall record the following information and provide to the owner for his records:
      a) Operating Voltage
      b) Hz
      c) Phase
      d) kW
      e) KVA
      f) Connected load (Amperage)
      g) Package information consisting of:
         i. Generator & Engine Make
         ii. Generator & Engine Model
         iii. Generator & Engine Serial Number
         iv. Start-up date

10. Prior to acceptance, any defects, which become evident during this test, shall be corrected by Supplier at no additional expense to JEA.

11. Vendor must coordinate all start up and testing activities with the engineer and owner. After installation is completed by others and normal power is available, the vendor must perform a one (1) day start-up including the use of building load. The start-up technician will instruct all necessary personnel how to operate and maintain the equipment in accordance to the manufacturer's requirements.

12. The Supplier's representative shall provide training as required for JEA in the proper operation of the equipment. The supplier shall provide at no additional cost to JEA any and all software and data ports to communicate with engine-generator EMC panels.

1.12 WARRANTY

A. Two (2) year standard standby generator warranty and an additional Three (3) year comprehensive (parts and labor) standby generator warranty. Labor, materials, and travel for the warranty period repair will be paid by manufacturer during normal business hours. Comprehensive warranty shall cover the following:

1. Cooling System

2. Thermostat Housing

3. Water Manifold Housing

4. Jacket Water Precooler

5. Jacket Water Pump

6. Thermostat

7. Radiator & Fan
8. Fuel System
9. Steel Fuel Lines
10. Fuel Shutoff Solenoid
11. Fuel Injectors
12. Fuel Transfer Pump & Housing
13. Fuel Priming Pump
14. Fuel Transfer Pump
15. Lubrication System
16. Pan, Pump Cooler
17. Crankcase Breather
18. Engine Oil Pump Drive
19. Prelubrication Pump
20. Electric System
21. Control Module (ECM)
22. Sensors: All Engine Sensors
23. Wiring Harness & Connectors
24. Starter
25. Engine Alternator
26. Alternator End
27. Alternator, including Rotor, Stator, and Exciter
28. Generator Controls
29. Power Center
30. Air Induction & Exhaust
31. Exhaust Manifolds, Studs & Gaskets
32. Inlet Air Heater Relay

33. Intake Manifold
34. Turbocharger(s)
35. Air-to-Air Aftercooler Cores
36. Muffler/Exhaust System
37. Exhaust Guards
38. Diesel Oxidation Catalyst
39. Short Block
40. Cylinder Block Casting
41. Crankshaft
42. Connecting Rod Assembly
43. Piston, Wrist Pin, Retainer Clip & Piston Rings
44. Idler and Timing Gears
45. Accessory Drive
46. Cylinder Head
47. Cylinder Head
48. Intake & Exhaust Valves
49. Valve Mechanism
50. Camshaft, Camshaft Bearings, Key, Gear
51. Front & Rear Covers
52. Front Cover/Plate/Housing/Gears & Gaskets
53. Vibration Damper
54. Flywheel Housing & Gasket
55. Crankshaft Front & Rear Seal
56. Optional Aftertreatment Coverage
57. Diesel Particulate Filter
58. Selective Catalytic Reduction

59. and any additional manufacture components, having a manufactures part number, installed by an authorized dealer.

60. The Platinum Plus coverage also covers all authorized dealer overtime for warranty repairs and all rental equipment for equipment down longer than 48 hours.

61. Tank manufacturer shall provide its standard 30-year warranty.

END OF SECTION

THIS PAGE INTENTIONALLY LEFT BLANK

© 2019 CDM Smith
All Rights Reserved

SECTION 16400
ELECTRICAL APPARATUS

PART 1 GENERAL

1.01 DESCRIPTION OF WORK

A. In general, the work specified in this section of the specifications includes the furnishing of all labor, material, and services necessary to install the following material, including all fees, charges, and permits necessary.

1.02 SYSTEM RESPONSIBILITY

A. All major components of the electrical system shall be the product of one manufacturer. To insure coordination, compatibility, and the maximum interchangeability of equipment items, the remaining components shall be provided by the major equipment manufacturer.

B. The manufacturer shall maintain a recognized engineering, servicing, and repair facility in the project locality.

1.03 SUBMITTALS

A. Complete wiring diagrams including coordination with instrumentation systems, generation systems, auxiliary control systems, etc., shall be approved prior to manufacture. Drawings shall be clear and carefully prepared to facilitate interconnections with other equipment. Standard drawings revised to indicate applicability shall not be acceptable.

B. Submittals shall include from the VFD manufacturer a Profibus Certificate of Compliance and a Profidrive Certificate of Compliance for each VFD.

C. Submittal shall include from the VFD manufacturer a complete listing of all drive configuration parameters with a project specific recommendation for each setting. The submittal shall include an instruction manual describing in detail the function of each parameter. The parameter setting recommendations shall be selected to insure optimum project specific performance and reliability.

PART 2 PRODUCTS

2.01 GENERAL REQUIREMENTS

A. All factory wiring shall be permanently numbered every 12 inches.

B. In accordance with the JEA Approved Equipment Standards, the electrical apparatus shall be as manufactured by Eaton Cutler-Hammer, Siemens or Square-D Company.

C. The custom variable frequency drive equipment including harmonic filters shall be manufactured by a JEA approved Water and Sewer Standards “Pump Station Electrical and Control Panel” builder. All variable frequency drive equipment shall be native Profibus DP compliant and Profidrive PP04 compliant without the use of external adaptors, converters or gateways.

D. Alternate equipment that has been pre-qualified by the JEA, and is included within the JEA Approved Equipment Standards, shall be furnished complete with all accessory equipment, custom modifications, installation adjustments, etc., as required to meet the basis of design criteria, and at no additional cost to the JEA.

E. Auxiliaries, including fans, that are required for rated load operation at maximum ambient temperature, shall be 100 percent redundant.

F. Corrosion protection shall be provided for circuit boards and critical electrical components. Varnished or epoxy encapsulated circuit boards and tropicalized contactors suitable for corrosive environments shall be furnished where the equipment is not located in climate controlled areas.

G. Electrical equipment construction and installation shall be provided as specified in the section of these specifications entitled ELECTRICAL WORK – GENERAL. Control components shall be provided as specified in the section of these specifications entitled INSTRUMENTATION AND CONTROL.

2.02 MOTOR CONTROL CENTERS

A. Unless indicated otherwise motor control centers (MCC) shall be NEMA Class II, Type B, provided in NEMA 12 enclosures with open bottom panels and shall be UL-approved for use as service entrance equipment. Units located outdoors shall be NEMA 3R non-walk-in construction. Each lineup shall consist of vertical sections nominally 90" high, 20" deep, and 20" wide. Each lineup shall be equipped with 120/1/60 space heaters and shall be provided with starter units, feeder units, main breakers, transfer switches, transformers, panelboards, control equipment, etc., as indicated on the drawings. Control equipment shall be provided as specified in the section of these specifications entitled INSTRUMENTATION AND CONTROLS.

B. Each vertical section shall be fabricated of code gauge steel, reinforced and bolted together to form a rigid, free-standing, completely enclosed assembly. Each section shall have a gray baked enamel final coat over a rust-inhibiting prime coat. Enclosure finish shall be suitably touched up, following installation, with a manufacturer's supplied spray. Unless approved otherwise, the final coat shall be ANSI 61 Light Gray.

C. Each vertical section shall be provided with a separate vertical wire trough door, a 12" horizontal wireway at the bottom, and a 6" horizontal wireway at the top. Each section shall have flange-formed covers on the rear and flange-formed doors with concealed hinges and quick release quarter-turn latches in the front. Unless approved otherwise, each vertical section shall be front-mounted only, completely front-accessible, and suitable for mounting against the wall. Each lineup shall be provided with continuous lifting angle and floor sills.

D. Power shall be distributed throughout the lineup by means of a 3-conductor, bolt-connected, edgewise-mounted, tin-plated copper bus bar system. Cable shall not be used on the load side of the main. Each lineup shall be provided with a continuous ground bus and, if indicated, a continuous neutral bus. Each bus shall be braced, and the entire motor control center rated, for the maximum available short-circuit fault current, minimum 65,000 amperes RMS symmetrical. The main horizontal bus shall be enclosed in an isolating compartment at the top of each vertical section. The main bus shall be rated as indicated on the drawings and shall not be rated less than 600 amperes. The vertical bus sections shall be sized for the total connected load and

shall not be rated less than 300 amperes. The main horizontal bus, transfer switch bus, cable lugs, etc., and the full height of the vertical bus shall be isolated providing a complete, dead-front installation with glass-reinforced polyester barriers equipped with shutter mechanisms for stab openings. Each ground bus shall be rated for the total capacity of the lineup and shall not be rated less than 300 amperes. When provided, each neutral bus shall have 50% of the full capacity of the main horizontal bus and shall be connected to the ground bus by a removable link.

E. A separate control power source, independent of any single control circuit, starter unit, etc., shall be provided for all control components (control relays, annunciators, level controllers, etc.), integral to multiple control circuits or system operations, or actuated by remote field devices. Where practical, all control components connected to the separate control power source shall be located in a common compartment.

F. Each unit compartment shall be provided with an individual front door, interlocked mechanically with the unit disconnect device to prevent opening the door with the unit energized, or energizing the unit with the door open. Unit disconnect device handles shall indicate the ON, OFF, TRIPPED, and RESET positions and shall be provided with means for padlocking in the OFF or ON positions. Each unit compartment, including door, shall be individually removable without disturbing adjacent units. Unless approved otherwise, all units shall be of drawout construction with a positive guidance system to insure positive stabbing into the vertical bus. Unit stabs shall be tin-plated copper. Each unit compartment shall be provided with a door-mounted engraved nameplate attached with removable fasteners.

G. Each motor starter unit shall be the combination type complete with molded case motor circuit protector; magnetic starter; manual resetting, 3-pole, bi-metallic thermal overload relay; individual 120 volt control power transformer; door-mounted pilot control devices, indicators, and instruments; and required accessory control relays, alternators, etc.

1. Each motor starter or contactor coil shall be equipped with a transient suppressor to limit high voltage transients.

2. Overload element ratings shall be individually selected and adjusted in the field to coordinate with the equipment connected.

3. Motor starters for submersible motors shall be equipped with ambient-compensated, bi-metallic, quick-trip type overloads.

4. Control power transformers shall be fused on both primary leads and one secondary lead with the remaining lead grounded and shall be sized for the entire control circuit, including motor space heaters and all additional remote auxiliary devices.

5. Motor circuit protectors shall be quick-make, quick-break, molded case air circuit breakers with adjustable instantaneous trip. Instantaneous trip settings shall be individually adjusted in the field to coordinate with the equipment connected.

6. Each unit shall be provided with 2-piece draw-out terminal boards, for load and control terminals. The field terminal board component shall be mounted adjacent to the wiring trough.

7. As indicated on the drawings, starters shall be full voltage, across-the-line type, or solid state reduced voltage type, unless noted otherwise. Starters shall be reversing or non-reversing as indicated.

8. Multi-speed starters shall have compelling relays which require starting at lowest speed, and prevent instantaneous transition between speeds.

9. Starter unit size and ratings shall be coordinated with the equipment supplied. Units of the same size shall be interchangeable.

10. In addition to contacts required, all starter units shall be provided with 2 spare N.O. and N.C. auxiliary contacts.

H. Solid-state reduced voltage motor starters shall consist of three sets of two inverse-parallel connected SCR's with a complete microprocessor based electronics package to provide soft start and smooth stepless acceleration to full speed. Unless otherwise indicated, or required by the application, each solid-state reduced voltage starter shall provide individually adjustable acceleration and deceleration control (0 - 120 seconds). Each starter shall be equipped with voltage transient protection (thermostat, MOV, and RC protection of each pole), shorted SCR protection, and single phase protection. Each starter shall be equipped with a 3 phase temperature-compensated solid-state motor overload protection relay. Each starter shall be fan-cooled and shall be rated 115% FLA continuous duty and 300% FLA for a minimum of 30 seconds. Each starter shall be equipped with a fault indication pilot light and auxiliary contact for remote indication of fault condition. Unless indicated otherwise, each solid-state motor starter shall include fully rated isolation contactor and bypass shorting contactor. Each solid-state motor starter shall automatically resume normal operation following a power outage.

I. Feeder units shall be equipped with molded case air circuit breakers, unless indicated otherwise. Breakers shall be quick-make, quick-break, with trip-free operation, incorporating an internal trip bar and a single external handle. Breakers shall be thermal magnetic type rated not less than 35,000 amperes RMS symmetrical. Breakers rated above 150 amperes shall be provided with interchangeable trips. Breakers shall be provided with control accessories, such as shunt trip, auxiliary contacts, etc., as indicated or required for proper interlocking and operation.

J. Unless specified otherwise, main breakers shall be as specified for feeder breakers; however, main breakers shall be shall be 100% rated, UL-approved for use as service entrance equipment, and shall be fully rated for the maximum fault current, without the use of current limiters. Each main breaker shall be equipped with a completely self-contained temperature insensitive automatic trip unit with selective tripping characteristics including adjustable long time setting, adjustable long time delay setting, adjustable short time setting, adjustable short time delay setting, adjustable instantaneous setting, and ground fault protection systems. Each main breaker shall be equipped with auxiliary contacts for remote indication of breaker status and overcurrent trip.

K. Power monitoring units shall be complete microprocessor-based circuit monitors for each incoming line, and selected feeders as indicated. Power circuit monitors shall be equipped with data communications port, communications interface modules, protocol converters, etc. as required for remote monitoring from the Owner’s standard monitoring system. Power circuit monitors shall continuously monitor and display 3 phase current, voltage, power factor,

frequency, watthours, varhours, demand current, and demand power, and shall store historical maximum and minimum data for each parameter monitored. Power meters shall be Siemens PAC4200.

2.03 VARIABLE FREQUENCY DRIVES

A. Variable frequency drives shall control the speed of standard squirrel-cage induction motors by controlling the frequency applied to the motor. Each variable frequency drive shall convert incoming 60 hertz, 3 phase AC power to variable frequency AC by use of a 3 phase insulated gate bipolar transistor power module inverter with sine-coded pulse width modulated output. Each drive shall operate with a minimum of 0.98 primary power factor and a minimum efficiency rating of 0.96. Each drive shall have a continuous overload current rating of 110%, and 120% for 60 seconds.

B. Each VFD manufacturer shall provide a Profibus Certificate of Compliance and a Profidrive Certificate of Compliance for each VFD.

C. Each variable frequency drive shall be properly equipped and configured for maximum reliability and resiliency with regard to the site specific application and operating conditions.

1. Each VFD shall individually monitor each incoming line to provide three phase protection from phase loss, phase imbalance, and phase reversal. The VFD incoming line power monitoring and protection shall be independent of DC bus voltage monitoring.

2. Each VFD shall be equipped with incoming line transient voltage surge protection.

3. Each VFD for variable torque application shall be oversized based on the current torque rating to improve the drive overload rating, and to extend the drive voltage sag ride through capability. Each VFD for constant torque applications shall be oversized a minimum of one drive size.

4. Each VFD shall be specifically configured to provide maximum voltage sag ride through capability, including utilization of kinetic buffering and flying restart. Each drive shall be configured to automatically restart following an under voltage trip.

5. Each VFD shall be configured to protect the drive, pump and motor during abnormal power quality events, and to safely restart once normal power quality is restored.

6. Each VFD shall be rated for environmental conditions meeting at minimum classification of 3C3 per IEC/EN 60721-3-3.

D. The VFD manufacturer shall provide a complete listing of all drive configuration parameters with project specific recommendations for each setting. The submittal shall include an instruction manual describing in detail the function of each parameter. The parameter setting recommendations shall be selected to insure optimum project specific performance and reliability.

1. Prior to startup, the VFD manufacturer shall obtain in writing the proposed drive configuration approved by JEA.

2. During startup, the VFD manufacturer shall configure each drive to match the JEA approved configuration.

3. The VFD manufacturer shall provide an electronic and hard copy printout of the complete configuration of each drive, including all custom and default configuration parameters. A copy of the complete configuration listing shall be laminated and mounted on the inside of the drive compartment door.

4. The performance of each drive shall be carefully monitored by the VFD manufacturer during an initial 30 day period of normal operation following final acceptance by JEA. Necessary and recommended drive configuration adjustments approved by JEA shall be implemented by the VFD manufacturer. All drive configuration documentation, including the laminated hard copy mounted inside the drive cabinet, shall be immediately updated following each adjustment.

E. Each drive shall be designed to operate from a local enclosure door mounted digital keypad, and from a remote automatic speed reference signal. Each drive shall be contained within a gasketed, force-ventilated, free-standing motor control center style enclosure. Enclosures shall be equipped with replaceable filters. All factory wiring shall be permanently numbered every 12".

1. Drive digital keypads shall be intelligent operator panels equivalent to Siemens IOP-2.

F. Each drive shall be equipped with input circuit breaker, output contactor, 3 phase temperature-compensated solid-state motor overload protection, and fault protection and indication as follows:

1. Softstall

2. Current limit

3. Overcurrent

4. Overvoltage

5. Short-circuit at load

6. Load-side ground fault

7. Undervoltage

8. Momentary power failure

9. Electronic thermal overload protection

10. Overtemperature

11. Overfrequency

G. Each drive shall be equipped with the following system interfaces:

1. Auxiliary dry contacts for indication of drive operation

2. Auxiliary dry contacts for indication of drive fault

3. Drive speed control input (4-20mA)

4. Drive speed report back output (4-20mA)

5. Digital diagnostic display for indication of drive diagnostic information

6. Profibus communications link to allow drive programming, monitoring, and control

H. Each drive shall provide independently adjustable acceleration (0.1-6000 seconds) and deceleration (0.1-6000 seconds) with choice of linear, S or C curves; adjustable starting frequency (0-10Hz) and maximum frequency (25-400Hz; adjustable voltage boost (0-300%); adjustable soft stall (10-150%); adjustable PWM carrier frequency (0.5-10KHz); and individually adjustable torque and current limits. All programmable parameters shall be adjustable from the door-mounted digital operator keypad.

I. Each drive shall be capable of PID set point control; a minimum of three critical frequency jump points with individual bandwidth; a minimum of eight digital inputs selectable for drive enable, reset, forward/reverse direction, start/stop control, preset speed points, etc. ; and a minimum of three relay outputs selectable for run indication, fault, speed reach, low speed, etc.

J. Each drive shall automatically restart and resume normal operation following a power outage. Each drive shall have an adjustable retry function after a fault (1-10 attempts, 1-10 seconds).

K. Each variable speed drive to be controlled by a remote instrumentation signal shall be equipped with all necessary logic and control apparatus to provide the intended automatic mode of operation.

L. All VFDs shall be equipped with drive output line conditioning as required to protect the connected motors from reflected wave high voltage impulse, and shall submit documentation to demonstrate compliance.

M. All VFDs while operating at rated load shall limit harmonic distortion to no more than 5% for general systems during operation from the utility source and 10% for dedicated systems during operation from the standby generator source as defined by IEEE 519-Latest. The VFD manufacturer shall provide harmonic filtering equipment required to meet this distortion limit and shall submit calculations to demonstrate compliance for drives operating from both sources.

2.04 PANELBOARDS

A. Lighting and power distribution panelboards shall be dead-front type equipped with main circuit breaker or main lugs only, as indicated on the drawings. Lighting panelboards shall be suitable for 120/208 volt, 3 phase, 4-wire, or 120/240 volt, 1 phase, 3-wire installation as indicated. Power distribution panelboards shall be suitable for 277/480 volt, 3 phase, 4-wire installation.

B. Panelboards shall be constructed with reinforced galvanized steel frames, sequence phasing, copper or tin-plated aluminum bus bars, code-gauge galvanized steel boxes with adequate wiring gutters, and code-gauge steel front panels with gray enamel finish over a rust-inhibitor. All connections shall be anti-turn solderless mechanical type and each panelboard shall be provided with a solid neutral bar. Front panels shall be provided with hinged doors equipped with semi-concealed hinges, directory card holder, and flush type combination catch and lock (all locks keyed alike with a minimum of 3 keys for each panel). Panelboard enclosures located outdoors or in corrosive atmospheres shall be 316 stainless steel or fiberglass NEMA 4X.

C. Main and branch breakers shall be bolt-on, quick-make, quick-break, thermal magnetic, molded case, trip-free type containing thermal inverse time delay and magnetic instantaneous over-current trip elements. Automatic tripping shall be indicated by the breaker handle assuming a clearly distinct mid-position. Branch breakers shall be interchangeable and shall be removable from the front of the panel without disturbing adjacent units. Multi-pole breakers shall incorporate internal trip bar and a single external handle.

D. Breakers supplying receptacles located in restrooms, locker rooms, shower rooms, etc., or outdoors, or weatherproof receptacles located indoors, shall be GFCI. Breakers supplying unswitched lighting circuits shall be rated SWD. Breakers supplying heating, air conditioning and refrigeration equipment shall be rated HACR.

E. Equipment ratings as indicated on the drawings shall be approximate. Panelboard and breaker ratings shall be coordinated with the installed service and the loads supplied. Unless indicated otherwise, breakers shall be rated not less than 10,000 amperes RMS symmetrical for 120/240 volts and 22,000 for 277/480 volts.

2.05 DRY TYPE TRANSFORMERS

A. Dry type transformers for general power and lighting shall be 2-winding, self-cooled, power transformers with ratings as indicated on the drawings. Unless indicated otherwise, transformers 3 KVA and above shall be provided with 4 fully rated taps, two 2-1/2% above and two 2-1/2% below rated primary voltage. Each unit shall be provided with a 220 degrees C insulation system incorporating a maximum 150 degrees C temperature rise above 40 degrees C ambient and shall be designed for continuous operation at rated KVA.

B. Transformer core shall be of high quality, cold-rolled, grain-oriented steel, annealed by the manufacturer for low loss and exciting current. Laminations shall be formed to eliminate burrs and annealed to reduce losses to a minimum. Winding conductors shall be annealed and insulated by the transformer manufacturer. Conductor surfaces shall be free from slivers, burrs, and other irregularities. Core and coil assembly shall be vacuum-impregnated for maximum resistance to moisture.

C. Enclosures shall be drip-proof and rodent-proof; all units installed outdoors shall be 316 stainless steel weatherproof construction.

D. All materials used in the transformers shall be flame-retardant and self-extinguishing and design shall incorporate vibration dampening systems.

E. Overload level, sound level, and BIL ratings shall meet or exceed NEMA and ANSI Standards.

2.06 POWER SYSTEMS STUDY

A. The Contractor shall furnish bound copies of a power system report which shall include the following:

1. Arc Flash Study in accordance with IEEE Standard 1584 and NFPA 70E. The study shall calculate the incident energy and flash protection boundary at all locations within the electrical distribution system (motor control centers, automatic transfer switches, panelboards, etc.).

2. Short Circuit Study, in accordance with ANSI C37.010-latest, should be performed to check the adequacy and to verify the correct application of circuit protective devices and other system components specified. The study shall address the case when the system is being powered from the normal source as well as from the on-site generating facilities. Minimum, as well as maximum, possible fault conditions shall be adequately covered in the study.

3. Protective Device Coordination Study, with coordination plots of key or limiting devices, plus tabulated data including ratings or settings selected. In the study, a professional engineering balance shall be achieved between the competing objectives of protection and continuity of service for the system specified taking into account the basic factors of sensitivity, selectivity, and speed.

4. Motor Starting Study, for each large motor and for the largest motor served from each motor control center, to determine voltage dip or power inrush limitations at selected locations due to motor starting.

B. The Contractor shall warrant the exercise of professional competence in the performance of the specified studies to be provided by the major equipment manufacturer or a qualified expert. The Contractor shall obtain and verify all information necessary to perform the specified studies including utility company service data, generating equipment service data, motor data, existing equipment ratings, etc.

C. Upon completion, the Contractor shall provide written verification of final relay and trip settings as recommended by the system studies or otherwise approved.

D. The major equipment manufacturer shall provide 4 x 6 inch machine printed, UV resistant thermal transfer type labels of high adhesion polyester for each location identified in the arc flash study, for field installation by the Contractor.

PART 3 EXECUTION

3.01 SERVICE AND TRAINING

A. The major equipment manufacturer shall provide support and technical direction of installation, energization, and operation of the electrical equipment. Experienced field service engineering personnel shall be available at the job site, as needed, to provide the following factory service:

1. Recommended procedures for checks and tests.

2. Assist in solving erection problems by making critical checks and necessary adjustments.

3. Supervise necessary operational tests, verify, and document test results.

4. Perform final inspection of installed equipment.

5. Participate in initial energization.

6. Check and test all relays for proper operation. Contractor shall set relays as directed by the Engineer and shall submit a list of "as-left" settings.

7. Provide revised factory drawings on an "as-built" basis.

B. Upon completion, final approved as-built wiring diagrams shall be permanently fastened inside the enclosure doors of each SWB section, MCC cubicle, etc. Wiring diagrams shall include all local and remote interconnections, in detail.

C. Prior to startup, the major electrical equipment manufacturer shall conduct a complete training program (minimum 1/2 days duration) at the job site for a minimum of 4 Owner-selected operating personnel. The training program shall include operation, preventive maintenance, and troubleshooting instructions relative to all aspects of the major electrical equipment provided, including the motor control centers, panelboards and service entrance rated main breakers.

D. Prior to startup, the variable speed drive manufacturer shall conduct a complete training program (minimum 1/2 days duration) at the job site for a minimum of 4 Owner-selected operating personnel. The training program shall include operation, preventive maintenance, and troubleshooting instructions relative to all aspects of each variable speed drive system provided.

1. Prior to the training program, the variable speed drive manufacturer shall obtain in writing from JEA the latest JEA standardized drive configuration settings. Each drive shall be properly configured, and the actual configuration settings for each drive shall be submitted in writing to JEA for review and approval.

2. During startup, the VFD manufacturer shall configure each drive to match the JEA approved configuration.

3. Each drive configuration shall be tested to confirm that the drives will automatically restart upon restoration of power following a power failure. Each drive configuration shall be tested to confirm that the drives will shut down during unacceptable power quality conditions, for example single phasing, and shall resume operation once acceptable power quality has been restored. Testing shall be witnessed by JEA.

4. The VFD manufacturer shall provide an electronic and hard copy printout of the complete configuration of each drive, including all custom and default configuration parameters. A copy of the complete configuration listing shall be laminated and mounted on the inside of the drive compartment door.

5. The performance of each drive shall be carefully monitored by the VFD manufacturer during an initial 30 day period of normal operation following final acceptance by JEA.

Necessary and recommended drive configuration adjustments approved by JEA shall be implemented by the VFD manufacturer. All drive configuration documentation, including the laminated hard copy mounted inside the drive cabinet, shall be immediately updated following each adjustment.

6. The variable speed drive manufacturer shall provide complete drive operation and maintenance manuals.

E. Each training program shall be scheduled a minimum of 14 days in advance. Proposed dates shall be submitted in writing for approval. The Owner may exercise the option to audio- or video-tape each entire training program without restriction.

END OF SECTION

© 2019 CDM Smith
All Rights Reserved

THIS PAGE INTENTIONALLY LEFT BLANK

© 2019 CDM Smith
All Rights Reserved

SECTION 16600
GROUNDING AND LIGHTNING PROTECTION

PART 1 GENERAL

1.01 DESCRIPTION OF WORK

A. In general, the work specified in this section of the specifications includes the furnishing of all labor, material, and services necessary to install the following materials, including all fees, charges and permits necessary.

1.02 GENERAL REQUIREMENTS

A. The project's grounding system shall consist of a grounding electrode system in accordance with NEC specifications, bonded to a main ground bus interconnecting all power distribution equipment. Ground rods shall be located at each service connection, transformer pad, generator pad, outdoor electrical equipment pad, and as indicated or required, and shall be bonded to the main ground bus. Ground rod sections shall be coupled and driven to establish a maximum resistance to ground of 10 ohms throughout the grounding system.

1.03 LIGHTNING PROTECTION

A. The Contractor shall furnish and install a Master-Labeled lightning protection system in accordance with UL Master Label Code 96A, LPI Code 175, and NFPA Code 780 for each of the following structures:

1. Pump Building

B. Upon completion, a UL Master Label shall be furnished for each system.

C. Streamer retarding air terminals and their associated parts shall be manufactured by Lightning Master Corporation of Clearwater, Florida.

1.04 SURGE PROTECTION

A. The CONTRACTOR shall furnish and install UL 1449 (latest edition) listed surge protection devices (SPD) for the protection of all AC electrical circuits from the effects of lightning-induced currents, substation switching transients, and internally-generated transients from inductive and/or capacitive load switching.

B. Each SPD unit shall be marked with a short circuit current rating and shall not be installed at a point on the system where the available fault current is in excess of that rating.

C. Complete UL 1449 performance ratings, including the fault current rating and VPR rating, shall be posted on the UL label of each SPD.

D. Submit copies of the UL Standard 1449 Listing documentation for each proposed SPD.

PART 2 PRODUCTS

2.01 GROUNDING

A. Ground rods shall be minimum 10 feet long, 3/4-inch diameter, copper-clad steel sections.

B. Main ground bus cable shall be minimum No. 4/0 (19 strand, bare copper). Bonding jumpers shall be minimum No. 2. Unless noted otherwise, all grounding conductors shall be insulated and shall have green colored insulation.

C. All grounding hardware such as clamps, connectors, couplings, lugs, bolts, nuts, and washers shall be of silicone bronze.

2.02 LIGHTNING PROTECTION

A. All material furnished shall be copper or bronze UL-approved and labeled and of the size, weight, and construction to suit the application in accordance with UL and LPI code requirements and manufacturer's recommendations.

B. Streamer retarding air terminals shall be minimum 5/8-inch diameter copper bars extending a minimum of 18 inches above the object protected. Bases shall be cast bronze with bolt pressure cable connections and shall be securely mounted with stainless steel bolts or screws. Conductors shall be minimum 29 strand 17 gauge copper.

2.03 SURGE PROTECTION

A. AC power surge protection devices (SPD), formally transient voltage surge suppressors (TVSS), shall utilize heavy duty ‘large block’ MOVs, each exceeding 30mm diameter, with redundant modules per phase. SPD equipment shall provide suppression elements between all phases and each phase conductor and the system neutral. AC power surge protection equipment shall be APT, or equal.

B. SPD shall be UL labeled as Type 1, intended for use without need for external or supplemental overcurrent controls. Every suppression component of every mode, including N-G, shall be protected by internal overcurrent and thermal overtemperature controls. SPDs relying upon external or supplementary installed safety disconnectors do not meet the intent of this specification.

C. SPD shall be UL labeled with 200kA Short Circuit Current Rating (SCCR). Fuse ratings shall not be considered in lieu of demonstrated withstand testing of SPD, per NEC 285.6.

D. SPD shall be UL labeled with 20kA Inominal (I-n) for compliance to UL 96A Lightning Protection Master Label and NFPA 780.

E. Minimum surge current capability (single pulse rated) per phase shall be:

Service Entrance and Power Distribution Equipment:	300kA
Panelboards & Control Panels:	100kA

F. SPD shall provide surge current paths for all modes of protection: L-N, L-G, and N-G for Wye systems; L-L, L-G in Delta and impedance grounded Wye systems.

G. UL 1449 Listed Voltage Protection Ratings (VPRs) shall not exceed the following:

System Voltage	L-N	L-G	L-L	N-G
208Y/120	700V	700V	1200V	700V
480Y/277	1200V	1200V	1800V	1200V

Numerically lower is allowed/preferred; old-style Suppressed Voltage Ratings (SVRs) shall not be submitted, nor evaluated due to outdated less-strenuous testing)

H. UL 1449 Listed Maximum Continuous Operating Voltage (MCOV):

System Voltage	Allowable Voltage Fluctuation (%)	MCOV
208Y/120	25%	150V
480Y/277	15%	320V

I. SPD shall have UL 1283 EMI/RFI filtering with minimum attenuation of -50dB at 100kHz.

J. SPD shall include visual LED diagnostics including a minimum of one green LED indicator per phase, and one red service LED. SPD shall include an audible alarm with on/off silence function and diagnostic test function (excluding branch).

K. Warranty – Each SPD shall have a warranty period of not less than 10 years, incorporating unlimited replacements of suppressor parts if they are destroyed by transients during the warranty period.

PART 3 EXECUTION

3.01 GROUNDING

A. The concrete-encased steel reinforcement within the foundation of each structure shall be grounded, with a minimum of one 20-foot ground rod, at each corner column and at intermediate columns at distances not to exceed 60 feet. The main ground bus shall be interconnected to each ground rod throughout the structural grounding system with a continuous bare copper cable loop, minimum No. 4/0 (19 strand), buried 30 inches below grade and 24 inches outside the structural footing.

B. A minimum of one 20-foot ground rod shall be located within each manhole and handhole. The main ground bus shall be interconnected to each ground rod throughout the underground ductbank system with a continuous bare copper cable, minimum No. 4/0 (19 strand), encased within the ductbank concrete envelope.

C. All grounding connections shall be made in the same manner as current carrying connections are made with bolted clamps and solderless connectors. All underground grounding system connections, cable-to-cable, cable-to-ground rod, etc., shall be made with exothermic-fused connections. Contact surfaces shall be equal in area to those of current carrying connectors. All contact surfaces shall be thoroughly cleaned before connections are made.

D. All ground connections shall be made with connectors or lugs approved for the specific type of connection.

E. Insulated-type grounding bushings shall be used for all metallic conduit terminations.

F. Permanent and effective ground connections shall be provided for transformer secondary neutrals.

G. The metallic frame of each motor, generator, transformer, panelboard, lighting fixture, outlet box, control equipment enclosure, etc. shall be grounded to the ground bus of the power distribution equipment with an insulated grounding conductor included in the feeder or branch circuit conduit.

H. The base of each street or area lighting standard shall be grounded to a ground rod driven into the ground near the base of the standard and to a separate ground wire run with the feeder. Ground rods shall be driven so that the top is 6 inches below finished ground grade. When the foundation is placed, a suitable ground wire shall be embedded in the concrete to facilitate connection to the base on the inside.

I. Installed ground cables shall be protected from subsequent mechanical damage. Sleeves shall be provided in foundation walls and in floors to facilitate installation of ground cables. Where ground cables enter buildings through sleeves, the sleeves shall be sealed with jute packing and approved sealing compound.

3.02 LIGHTNING PROTECTION

A. Streamer retarding air terminals, conductor cables, and downlead cables shall be located and spaced in accordance with UL and LPI requirements. Streamer retarding air terminals shall be located on every corner and along structure perimeters at distances not to exceed 20 feet, nor more than 24 inches from roof edge or ridge end. Streamer retarding air terminals that exceed 24 inches in length shall not exceed 25 feet spacing center to center. On a flat or gently sloping roof, additional streamer retarding air terminals are to be located at intervals not to exceed 50 feet on center.

B. Downlead cables shall be installed at every corner column and at intermediate columns at distances not to exceed 100 feet. Minimum 3/4-inch Schedule 40 PVC conduits shall be embedded in each column as required for installation of downlead cables. Conductor cable fasteners shall be electrolytically compatible with the conductor and mounting surface and shall be installed not more than 3 feet apart on all conductors.

C. Metal bodies of conductance or inductance, including HVAC units, antennae, roof drains, plumbing vents, etc., shall be bonded to the lightning protection system.

D. The complete lightning protection system shall be bonded to the project's grounding system at each downlead cable. A minimum of three ground rods spaced 10 feet apart shall be bonded to the project's grounding system at each downlead cable connection.

E. Each area high mast lighting standard shall be equipped with a top-mounted streamer retarding lightning rod, downlead cable inside the pole, and base-mounted circuit surge protector.

F. Each low voltage panelboard shall be equipped with full service rated lightning arrestors ahead of the main.

G. Each installed lightning protection system air terminal that represents a potential impalement hazard shall be equipped with a flathead retro-fit slip-on impalement protector.

3.03 SURGE PROTECTION

A. Service Entrance - Each SPD installed on service entrance equipment shall be replaceable modular construction. A UL approved disconnect switch shall be provided as a means of servicing disconnect if a 60A breaker is not available.

B. Power Distribution - Each SPD installed on switchboards or motor control centers shall be replaceable modular construction. Each SPD shall have an independent means of servicing disconnect such that the protected power distribution equipment remains energized. A 30A breaker (or larger) may serve this function.

C. Sub Panels - Each SPD installed on power distribution panelboards, lighting panelboards, control panels, unit equipment, etc. shall be encapsulated construction.

D. SPD equipment shall be installed per manufacturer's installation instructions with lead lengths as short (less than 24") and straight as possible. Gently twist conductors together.

E. Installer may reasonably rearrange breaker locations to ensure short & straightest possible leads to SPDs.

F. SPD shall be installed on the load side of the main service disconnect.

G. Before energizing, installer shall verify service and separately derived system Neutral to Ground bonding jumpers per NEC.

H. Status indication pilot lights for each TVSS shall be remote mounted and shall be visible from the front of the protected equipment enclosure.

END OF SECTION

© 2019 CDM Smith
All Rights Reserved

THIS PAGE INTENTIONALLY LEFT BLANK

© 2019 CDM Smith
All Rights Reserved

SECTION 16900
INSTRUMENTATION AND CONTROL

PART 1 GENERAL

1.01 DESCRIPTION OF WORK

A. In general, the work specified in this section of the specifications includes the furnishing of all labor, material, and services necessary to install the instrumentation, control and monitoring systems, including all fees, charges, and permits necessary.

B. As specified in the section of these specifications entitled ELECTRICAL WORK - GENERAL, the Contractor shall furnish and install conduit, wiring, and connections for equipment and devices furnished under other sections of the specifications or under other contracts. The Contractor shall also install motor starters, switches, and other electrical equipment furnished under other sections or under other contracts.

C. The Contractor should refer to the mechanical specifications and drawings for locations of pressure-operated control switches, float switches, solenoid-operated valves, limit switches, alarm actuating contacts, and other devices requiring wiring.

D. The Contractor shall make all interconnections required between transmitters, receivers, recorders, indicating instruments, control panels, and miscellaneous devices, and shall provide for electrical supply to metering and signal systems.

E. All conduit and wiring between electrical and instrumentation panels, all field-mounted devices, and power sources shall be furnished and installed as required for a complete operable system.

F. Unless otherwise indicated, all electrical equipment and installation shall be in accordance with the section of these specifications entitled ELECTRICAL WORK - GENERAL.

1.02 SYSTEM RESPONSIBILITY

A. To insure coordinated control systems, to properly achieve the indicated functions, and to provide a maximum interchangeability of equipment items and parts, the complete instrument and control system shall be furnished by a single Instrumentation System Supplier (ISS) who shall be responsible for the satisfactory operation of the system.

B. The Instrumentation System Supplier shall perform all system engineering, prepare all necessary internal and external wiring and piping drawings, and assume full responsibility with the performance requirements of these specifications, and as required for a complete and operable facility.

C. The Instrumentation System Supplier shall be a "systems integrator" regularly engaged in the design and the installation of instrumentation systems and their associated subsystems as they are applied to the municipal water and wastewater industry. For the purposes of this Specification Section, a "systems integrator" shall be interpreted to mean an organization that complies with all of the following criteria:

D. Employs personnel on this project who have successfully completed ISA or manufacturers training courses on general process instrumentation and configuration and implementation of the specific programmable controllers, computers, and software proposed for this project. Key personnel shall hold ISA CCST Level 1 certification or have a minimum of 10 years of verifiable plant startup experience. Key personnel shall include, as a minimum, the lead field technician.

E. Has successfully completed work of similar or greater complexity on at least three previous projects within the last five years. Successful completion shall be defined as a finished project completed on time, without any outstanding claims or litigation involving the Instrumentation System Supplier. Potential references shall be for projects where the contract was of similar size to this project.

F. The Instrumentation System Supplier shall be a Certified Siemens Solution Provider.

G. Has been actively engaged in the type of work specified in this Specification Section for a minimum of five years.

H. The Instrumentation System Supplier shall maintain a permanent, fully staffed and equipped service facility with full time employees capable of designing, fabricating, installing, calibrating, and testing the systems specified herein. At a minimum, the Instrumentation System Supplier shall be capable of responding to on-site problems within 12 hours of notice. Provide an on-site response within 4 hours of notification starting at two months before scheduled start-up to two months after startup completion.

I. Actual installation of the instrumentation system need not be performed by the Instrumentation System Supplier's employees; however, the Instrumentation System Supplier as a minimum shall be responsible for the technical supervision of the installation by providing on site supervision to the installers of the various components.

J. The Instrumentation System Supplier shall be one of the following:

DSI Innovations LLC
13400 Sutton Park Dr. S., Suite 1001
Jacksonville, FL 32224
TEL: (336) 893-8385

EG Controls
11790 Philips Hwy
Jacksonville, FL 32256
TEL: (904) 292-0110

Infamation Technologies Group (ITG)
11235 St. John's Industrial Parkway North, Unit #2
Jacksonville, FL 32246
TEL: (904) 425-4760

K. The instrumentation equipment locations and conduit drawings are diagrammatic to show the general scope and route of instrumentation system conduit. The Instrumentation System

Supplier shall provide all conduit and wiring necessary for his specific requirements, in accordance with these specifications, and without additional cost to JEA.

1.03 SUBMITTALS

A. The Contractor's attention is directed to the requirements of the section of these specifications entitled ELECTRICAL WORK – GENERAL, and the GENERAL REQUIREMENTS. In order to facilitate review and approval of the proposed system, shop drawing submittals shall be made in two steps. The first submittal shall include all in-line devices such as flow meters, control valves, etc., to be supplied or coordinated with the instrumentation system. The second submittal shall include complete details of the instrumentation system.

B. Shop drawing submittals shall include the following:

1. Complete Bill of Materials, front panel view with component locations, subpanel view with component locations, and electrical schematics.

2. Functional description of the entire system including individual loop diagram descriptions.

3. Detail loop diagrams showing both piping and wiring requirements for each analog instrument loop in the system.

4. Component drawing for each component showing dimensions, mounting, and external connection details.

5. Detail layout, dimensions, fabrication, piping, and wiring schematic, connection, and interconnection drawings for each instrumentation panel, graphic display, termination cabinet, etc.

6. Component manufacturing data sheet for each component indicating pertinent data and identifying each component by item number and nomenclature as indicated on the drawings and in these specifications.

7. Operator Interface Panel screen display graphic submittals with detailed description of operation and menu structure diagram.

8. Testing plan description, sample test reports, and proposed testing schedule.

9. Training plan description, listing of training materials to be provided, and proposed training schedule.

C. Shop drawings shall conform to JEA standard drawing/schematics. References to the Bill of Materials shall be located for each component.

D. Testing Submittals - Submit, in one submittal, the following testing related documents:

1. Status signoff forms
   a. Develop and submit project specific I/O Status and Automatic Control Strategy signoff forms to be used during factory and field testing to organize and track each

loop's inspection, adjustment, calibration, configuration, and testing status and sign off. Include sign-off forms for each testing phase showing all loops.

1) Separate forms for factory and field testing can be used, or they can be combined, at the discretion of the ISS.
2) Submit testing forms prior to start of testing.

2. Testing Procedures
   a. Submit detailed procedures proposed to be followed for each of the tests specified herein. The test procedures shall serve as the basis for the execution of the required tests to demonstrate that the system meets and functions as specified.
   b. The documents shall be structured in an orderly and easy to follow manner to facilitate an efficient and comprehensive test.
   c. The test procedures shall indicate all pre-testing setup requirements, all required test equipment, and simulation techniques to be used.
   d. The test procedures shall be structured in a cause and effect manner where the inputs are indicated, and the outputs are recorded.
   e. The test procedures shall include the demonstration and validation under normal operating conditions and under various failure scenarios as specified in the contract documents.
   f. Testing may not start until all Testing Submittals have been approved.

E. Test Documentation

1. Upon completion of each required test, document the test by submitting a copy of the signed off Testing Status forms. Testing shall not be considered complete until the signed-off forms have been submitted and approved. Submittal of other test documentation, including "highlighted" wiring diagrams with field technician notes are not acceptable substitutes for the formal test documentation.

F. Operation and maintenance manuals, in accordance with the provisions of the section of these specifications entitled ELECTRICAL WORK – GENERAL, and the GENERAL REQUIREMENTS, shall also be supplied. Operating instructions shall incorporate an updated functional description of the entire system including the system schematics which reflect as-built modifications. Special maintenance requirements particular to the system shall be clearly defined along with special calibration and test procedures.

1. A complete set of "as-built" wiring, fabrication, and interconnection drawings shall be included with the manuals. In addition, an electronic copy of all drawings shall be submitted to JEA.

2. Electronic drawing files shall be AutoCAD 2017 format.

PART 2 PRODUCTS

2.01 GENERAL CRITERIA

A. All of the equipment shall be the manufacturer's latest and proven design. Specifications and drawings call attention to certain features but do not purport to cover all details entering into the design of the instrumentation system. The completed system shall be compatible with the functions required and the equipment furnished by the Contractor and shall include all

necessary control relays, contacts, and additional devices required for a complete, coordinated, operable facility.

B. Electrical control equipment, starters, contactors, etc., shall be full NEMA rated.

C. All contacts for control of electrically operated equipment shall be rated not less than 10 amperes on 120 volts.

D. All electrical components of the instrumentation and control system shall operate on 120/1/60 power, except as noted otherwise in the specifications.

E. Where control equipment is not within sight of the motor, a safety lockout station with position indication, which shall prevent application of current to the motor, shall be located near the motor. Where the driven equipment is located on a different level than their driving motors, a safety lockout station shall be provided on each level.

F. Programmable controllers shall be utilized for standard relay and control functions within motor control centers, control panels, etc., only where specifically approved. In general, conventional control equipment shall be provided.

G. All controls for remote electrically-operated or motor-driven equipment shall be complete, including all necessary auxiliary relays so as to require only wiring and connections to the equipment control circuit. All contacts for control of remote motor-operated or electrically-operated equipment shall be rated not less than 10 amperes on 120 volts unless specified otherwise herein.

H. All remote motor-operated or electrically-operated equipment shall have a separate 120 volt control circuit, except as indicated otherwise.

I. All necessary fuses or switches required by the instrumentation manufacturer for his equipment shall be provided with the equipment. All instruments requiring an internal power supply shall have an internal ON-OFF switch.

J. The drawings and specifications indicate the energy sources that will be provided. Any other devices (isolation transformers, power supplies, lightning arresters, etc.) necessary to obtain proper operation and protection of the instrumentation system shall be furnished with the instrumentation system.

K. Individually adjustable alarm modules shall be provided to generate all required alarm or interlocking contacts from analog signals.

L. Signal isolators shall be provided for all analog signals to auxiliary equipment remote from instrumentation panels.

M. Signal isolators and analog alarm modules shall be individual self-contained units.

N. All printed circuit boards throughout the instrumentation system shall have a protective coating to prevent corrosion.

O. All components shall be tagged with the item number and nomenclature given in the specifications and component tabulation lists.

P. Each field mounted transmitter shall be installed within a NEMA 12/3R aluminum or stainless steel enclosure for weather protection. Enclosures shall exceed the dimensions of the enclosed transmitter by a minimum of six inches on all sides and shall permit full unobstructed access to the enclosed transmitter. Enclosures shall be equipped with a continuous hinged access door with 3-point latching handle. Ventilation louvers shall be provided at top and bottom of both sides to promote convection cooling.

Q. Stainless steel spring-type terminals shall be used in all instrumentation and control panels; Wago TopJob S.rail mounted terminal blocks. All instrumentation and control panel control wiring shall terminate in ferrules.

2.02 CONTROL COMPONENTS

A. General - Where indicated on the drawings, or required by the functions specified, control components shall be furnished and installed with-in control panels, motor control center, or other approved locations. Suitable nameplates shall be provided for all panel door or surface-mounted control devices. All component terminals, including auxiliary contacts, shall be wired to master terminal boards.

B. Instruments - Instruments shall be of standard size not less than 5-1/2" in width and they shall present a uniform appearance when mounted upon the panels. Instruments shall have scales 5" in length and shall be accurate within 1% of full scale. Instrument scales shall be selected with full-load readings at 75% of the scale range, unless specified otherwise or approved.

C. Pilot Devices - Selector switches, pushbuttons, indicating pilot lights, and additional pilot devices as required, shall be 600 volt rated heavy-duty, oil-tight, 30mm pilot devices as manufactured by Eaton Cutler-Hammer, Square-D, or equal.

1. Pushbuttons shall be standard type with anodized aluminum rings and colored buttons.

2. Selector switches shall be standard handle type with anodized aluminum rings and handles.

3. Pilot lights shall be full brightness LED type.

4. All pilot devices shall have appropriate nameplates and locking means for locking in the de-energized mode, and shall be color coded (red - start, on, open, up; green - stop, off, close, down; black - test, silence, miscellaneous).

D. Timers - Where required for control system operation, multifunction programmable timing modules shall be provided. Timers shall have timing modes and cycle times as indicated, shall be provided for operation at voltage indicated, and shall have DPDT contacts; Potter & Brumfield CNS-35-96, or equal.

E. Control Relays - Where required for control system operation, control relays shall be 4PDT, blade type socket mounting relay modules with spring terminal bases, 10 amp contacts, internal LED, test button, and large ice cube style case.

1. Time delay relays shall be potentiometer adjustable time setting, 1.0% repeatability, 2PDT plug-in type time delay relays with, 10 amp contacts, 8-pin square sockets and hold-down springs. Delay on de-energize mode shall not require input power during the timing; Potter & Brumfield CK Series, or equal.

2.03 CONTROL DEVICES

A. Control Stations - Control stations shall be 30 mm, heavy-duty, corrosion resistant, water-tight and oil-tight, complete with NEMA 13 cast aluminum enclosures; Eaton Type E34, Square-D Type SK, or equal.

1. Safety lockout stations (SAFE-OFF) shall be equipped with 316 stainless steel padlock devices for padlocking in the de-energized position; Eaton 10250A63, Square-D Type K5, or equal.

2. Unless specified otherwise, control stations installed outdoors, or in corrosive atmospheres, shall have watertight, NEMA 4X cast aluminum enclosures.

B. Limit Switches (Leverless) - Where required for control system operation, magnetic target sensing, leverless limit switches shall be provided; GO Switch Model 81. Limit switches shall be NEMA 4X, hermetically sealed, type 316 stainless steel construction. Limit switches shall be equipped with 72 inch potted leads. Unless otherwise required by the application and installation, limit switch outlet shall be located at the bottom of the enclosure. Limit switches shall not require input power for operation. Limit switch contacts shall be DPDT rated 10 amps at 120 VAC. Limit switches located in hazardous locations shall be explosion proof and intrinsically safe.

C. Pressure Switches - Where required for control system operation, adjustable deadband, industrial pressure switches shall be provided; United Electric Model J120. Pressure switches shall be NEMA 4X watertight, epoxy powder coated die-cast aluminum construction, with type 316 stainless steel wetted parts. Contacts shall be SPDT rated 15 amps at 120 VAC. Each pressure switch shall be equipped with a 316 stainless steel, adjustable, self-cleaning pulsation dampener and a 3 factory-filled type 316 stainless steel process connection isolation assembly with pressure gauge; Red-Valve Series 40/42.

1. Pressure switches to monitor booster pump station high suction pressure shall be Model J120-552 with an adjustable range of 30” Hg Vac to 20 psi.

2.04 FIELD INSTRUMENTS

A. All field instruments shall be JEA latest standardized equipment as indicated on the drawings. Power and signal line surge protection shall be provided for each instrument signal. Each instrument shall include all mounting systems, fittings, etc. as required for complete installation and proper operation as intended.

B. Magnetic Flow Meters:

FE/FIT-201 Booster Pump Station Discharge Flow Meter 1
FE/FIT-202 Booster Pump Station Discharge Flow Meter 2

1. Magnetic flow meters shall be of the pulsed DC short-form design utilizing electromagnetic induction to produce a Profibus DP output signal directly proportional to flow, in one direction only.

2. Metering tubes shall be constructed of Type 304 stainless steel with polyurethane liner and ANSI 150# carbon steel flange end connections. Electrodes shall be Type 316 stainless steel.

3. Magnetic flow meters shall be NEMA 4X suitable for Class I, Group D, locations. Meter housings shall be provided with a corrosion-resistant epoxy coating. Meters shall be capable of accidental submergence up to 30'.

4. Meters shall be equipped with type 316 stainless steel non-corrosive, metallic grounding rings and all necessary signal cable.

5. Flow meters shall be hydraulically calibrated and computer printouts of the actual calibration data shall be furnished with each meter.

6. Magnetic flow transmitters shall be of the feedback type utilizing solid-state printed circuit construction and shall be provided with low flow cutoff circuitry for positive return to zero during no flow conditions.

7. Each transmitter shall be remote or integrally mounted to the flow tube as indicated. Flow transmitter housings shall be NEMA 4X cast aluminum. Flow transmitters shall be equipped with a full-scale digital indicating meter and observation window.

8. Magnetic flow meter accuracy shall be ±0.5% full scale for the range indicated. Magnetic flow meters shall be Endress+Hauser Model W 500, or pre-approved equal.

C. Pressure Transmitters:

PIT-101	Booster Pump Station Suction Pressure Transmitter 1
PIT-102	Booster Pump Station Suction Pressure Transmitter 2
PIT-201	Booster Pump Station Discharge Pressure Transmitter 1
PIT-202	Booster Pump Station Discharge Pressure Transmitter 2

1. Pressure transmitters shall be piezo-resistive strain gage type for use with installation and process indicated. Transmitters shall incorporate temperature-compensated, solid-state electronic construction, and shall produce an analog signal linear with respect to pressure.

2. Pressure transmitters shall be hybrid transmitter-switches with loop-powered 24 VDC Hart enabled smart 2-wire transmitter, and two programmable set point fail-safe solid state relays.

3. Transmitters shall be equipped with a 4 x 0.5” backlit LCD display, keypad, and configurable self-diagnostic IAW (I am working) indication.

4. Pressure transmitters shall be loop powered, with low power consumption, allowing the transmitter and switches to operate from loop power with no additional power supply or batteries.

5. Transmitter electronics shall be mounted in a NEMA 4X epoxy-coated aluminum housing with tempered glass window. Transmitter housings shall be equipped with two 3/4” NPT female conduit openings.

6. Transmitter sensors shall be type 316L stainless steel wetted parts, welded diaphragm, with 1/2” NPT male process connection.

7. Each pressure transmitter shall be provided with all accessories and mounting components required for proper installation and operation, including type 316 stainless steel mounting bracket for pipe or wall mounting.

8. Each pressure transmitter installation shall include a factory-filled type 316 stainless steel process connection isolation assembly with pressure gauge; Red-Valve Series 40/42.

9. Pressure transmitter accuracy shall be ±0.5% of full scale for the required ranges.

10. Pressure transmitters shall match the JEA standardized equipment: United Electric Series One Model 1XTXSW.

2.05 SUPERVISORY CONTROL SYSTEM

A. General - The supervisory control system (SCS) shall be a complete integrated system furnished and configured by the Instrumentation System Supplier who shall be responsible for the satisfactory operation of the entire system. The SCS shall consist of programmable logic controllers, operator interface panels, and communications network.

1. The JEA shall provide the WinCC interface for the SCS.

2. For all components furnished by the Instrumentation System Supplier, the Instrumentation System Supplier shall provide the JEA with all component data, calibration data, wiring diagrams, software copy of program with comments, etc. that may be required to facilitate the proper development of the SCS.

3. System startup and testing shall be provided by the contractor, and shall be witnessed and approved by JEA.

B. Programmable Logic Controller (PLC) - Each PLC shall be fully equipped to monitor all equipment status, alarm, and instrumentation system analog signals; control selected equipment operations; and seamlessly connect to the SCADA system network. To ensure coordination, compatibility, and maximum interchangeability with the JEA's existing systems, the basis of design for control system PLCs shall be Siemens Simatic S7-300 Series programmable logic controllers. Each PLC configuration shall be based upon the following JEA standardized components:

1. 6ES7 315-2EH14-0AB0 CPU

2. 6ES7 953-8LL31-0AA0 Micro Memory Card

3. 6ES7 321-1BL00-0AA0 Digital Input Modules

4. 6ES7 322-1HH01-0AA0 Digital Output Modules

5. 6ES7 331-7NF10-0AB0 Analog Input Modules

6. 6ES7332-7ND02-0AB0 Analog Output Modules

7. 6ES7 392-1BJ00-0AA0 20 Pin Front Spring Connectors

8. 6ES7 392-1BM00-0AA0 40 Pin Front Spring Connectors

9. 6EP4 134-3AB00-0AY0 SITOP DC UPS, 10A with Charger

10. 6GK5 108-0BA00-2AA3 Scalance Ethernet Switch

11. 6AV2 124-0XC02-0AX0 TP2200 Operator Interface Panel

C. The entire controller shall be suitable for installation and operation within harsh industrial environments, including 5-95% non-condensing humidity, 0-60°C temperature, vibration, shock, surges, etc., with-out fans, air conditioning, or electrical filtering.

D. Simatic Step 7 engineering software shall be used for all PLC programming. The Step 7 version to be used shall be the latest version presently utilized by JEA. Upon final acceptance, electronic copies of the final programming shall be included within the O&M manuals.

E. Unless indicated otherwise, prior to shipment, each PLC shall be loaded and tested at the Instrumentation System Supplier manufacturing facility, and shall be witnessed and approved by JEA.

F. Operator Interface Panel programming shall be provided by the Instrumentation System Supplier. Screen development shall follow existing JEA standards. The contractor shall provide detailed configuration submittal which includes fully developed graphic display screens, menu structure, and complete description of operation. Monitoring and control of all booster pump station operations shall be provided from the operator interface panel.

2.06 COMMUNICATION NETWORKS

A. All Profibus installations shall comply with the Profibus User Organization. More information can be found at “www.Profibus.com”.

1. Reference “Profibus Design Guideline” order number 8.012.

2. Reference “Profibus Assembling Guideline” order number 8.022.

3. ALL recommendations from the Profibus User Organization must be followed, such as using fiber optic cable instead of copper when leaving a building.

4. Profibus cable shall be type FC (Fast Connect) 2 wire shielded cable specifically designed for rapid installation; Siemens 6XV1830.

5. Profibus connectors shall be made with metal housing and have Power, Transmit, Termination and Error indicating LED's. Connectors shall be Brad Harrison MA9D00-42 and MA9D01-42 type or equal.

6. Only Diagnostic Repeaters shall be used where repeaters are required. Standard repeaters shall not be accepted. Repeaters shall be Siemens Diagnostic repeater 6ES7 972-0AB01-0XA0.

7. Provide an active termination resistor on the last device in the segment. Termination resistor shall be Procentec 101-00211A.

8. For fiber optic communications use the Siemens OLM G12 Part # 6GK1503-3CB00.

B. All Ethernet installations shall comply with the Profinet User Organization. More information can be found at "WWW.Profinet.com".

1. Reference "Profinet Installation Guideline for Cabling and Assembly" order number 8.072.

2. All recommendations from the Profinet User Organization must be followed such as using fiber optic cable when leaving a building.

3. Ethernet connectors shall be made with metal housing. Connectors shall be Siemens 6GK1901-1BB10-2AA0 type or equal.

4. All switches shall have the capability to be managed. Switches shall be of type Siemens Scalance X212-2 at minimum.

PART 3 EXECUTION

3.01 SYSTEM DESCRIPTIONS

A. General - The general arrangement of the analog instrument and control system is shown on the drawings.

1. No attempt has been made to detail on the drawings all accessories and devices required for the complete system. The Instrumentation System Supplier shall be responsible for the preparation of all detail installation drawings showing wiring, piping, mounting, etc.

2. The Instrumentation System Supplier shall be responsible for furnishing all devices required for a complete functioning system.

3.02 CONTROL PANELS

A. Where indicated on the drawings, specified, or required by the functions specified, control panels, including all necessary accessories, shall be provided for control of the associated equipment.

B. Control panels shall be constructed in accordance with the requirements of Section 433 of the *JEA Water & Sewer Standards*, and shall be manufactured by a JEA approved manufacturer.

C. Control panels shall be constructed in accordance with UL 508A requirements for enclosed industrial control panels and shall bear the UL508A serialized label.

D. All components shall be mounted using stainless steel machine screws. All holes shall be drilled and tapped. The uses of self-tapping screws are unacceptable.

3.03 ELECTRICAL TRANSIENT AND SURGE PROTECTION

A. All components of the control and instrumentation system shall be equipped with suitable surge arresting devices to protect the equipment from damage due to electrical transients, including lightning induced electrical power surges.

B. All power and signal circuits of each field instrument shall be protected with surge and transient protectors.

1. Protectors for 120 volt power circuits shall be Citel DS40-120.

2. Protectors for signal circuits shall be Citel DLAW-24D3.

C. Surge and transient protectors shall be connected to the electrical system ground. Supplemental grounding shall be provided in accordance with the protection equipment manufacturer's recommendations.

3.04 TESTING - GENERAL

B. The tests the ISS is required to perform are as follows:

1. Factory Testing
   a. Unwitnessed Factory Test (UFT).
   b. Witnessed Factory Test (WFT).

2. Field Testing
   a. Operational Readiness Test (ORT).
   b. Functional Demonstration Test (FDT).
   c. Startup Acceptance Test (SAT).

C. Wherever possible, perform tests using actual process variables, equipment, and data. Where it is not practical to test with real process variables, equipment, and data, provide all special testing materials and equipment required for a suitable means of simulation.

D. The results of all testing shall be tracked on a project specific status signoff form or similar document. The ISS shall be responsible for maintaining the sheet.

E. The ISS shall coordinate all required testing with the Contractor, all affected Subcontractors, the Engineer, and the Owner. Tests may be subdivided as required to accommodate the overall construction schedule and other specific concerns. However, no test will be considered complete until all partial tests are complete, and their results approved.

F. No equipment shall be shipped to jobsite until the Engineer and/or Owner has received all Factory Testing results and approved the system as ready for shipment.

G. The Engineer reserves the right to test or re-test any functions.

H. Correction of Deficiencies

1. All deficiencies in workmanship and/or items not meeting specified testing requirements shall be corrected to meet specification requirements at no additional cost to the Owner.

2. Testing, as specified herein, shall be repeated after correction of deficiencies is made until the specified requirements are met. This work shall be performed at no additional cost to the Owner.

I. All calibration, testing, demonstrations, training, etc., shall be at no additional cost to the JEA.

3.05 FACTORY TESTING - UNWITNESSED FACTORY TEST (UFT)

A. The purpose of the UFT is for the ISS to check the system prior to the Engineer and/or Owner attending the factory testing. This type of testing should be part of any quality firm's internal QA/QC procedures.

B. Temporary network connections will be required to confirm the network configuration. Temporary wiring of primary elements, final control elements, and field-mounted transmitters is not required.

C. Tests to be performed shall include, but not be limited to, the following. Each of these tests shall be specifically addressed in the Test Procedure submittal.

1. All panels and enclosures being provided shall undergo a thorough inspection to verify the integrity of the cabinet enclosures, frame structures, paint work and finish, etc. Review the panel drawings to ensure they accurately reflect the panel layout and wiring.

2. Perform a system audit to verify all components have been staged for the test and have been documented properly with correct model numbers, serial numbers, etc. The following documentation of the audit shall be provided at the factory test and submitted as part of the O&M Manual Documentation:
   a. For each workstation and server, list of all software installed (including the operating system), with software revision number, software improvement modules or patches installed, license number and owner registration information, warranty period, vendor and local distributor names and contacts.
   b. For each microprocessor-based component connected to the control communication backbone in the system (PLCs, managed switches, protocol converters, communication cards on final field devices, radios, etc.), list the firmware revision, vendor and local distributor information, and system, warranty information, configuration parameters (e.g., communication settings, fail position settings, etc.)

3. Panel wire pull tests shall be performed to ensure all wiring has been properly connected with the appropriate torque to prevent wires from coming loose.

4. UPS shall be tested for correct sizing of backup battery, and to verify the UPS switch power correctly.

5. A 100 percent I/O point checkout shall be performed to verify proper operation of the input/output points from the panel terminations to HMI nodes. At a minimum, the I/O checkout shall consist of four steps.
   a. Discrete input signals shall be simulated with temporary wire jumper at the field terminal blocks in the control panels to verify proper status in the HMI nodes.
   b. Analog input signals shall be connected to a signal generator at the field terminal blocks in the control panels to verify proper status in the HMI nodes and signals shall be verified at zero percent, 50 percent, and 100 percent of full scale.
   c. Discrete output signals shall be tested by switching the equipment to manual control at the HMI nodes and turning the output on or other means to turn the output on. Then verify the output is on by connecting a digital multimeter to measure the continuity at the terminations, thus verifying the command from the PLC has properly executed the contact closure.
   d. Analog output signals shall be tested by switching the equipment to manual control at the HMI nodes and turning the output on or other means to turn the output on. Then verify the output by utilizing a digital multimeter to measure the current or voltage generated at the termination points.

6. For each hardware enclosure, inspection shall include, but not be limited to, cabinet enclosures, frame structure, paint work and finish, dimensions, and hardware operability (i.e., fans, door hinges, key locks, etc.).

7. For each subpanel, inspection shall include, but not be limited to, I/O subsystem physical layout, power supply sizing and mounting, cable routing, wire runs across hinges properly installed, fans and blowers unobstructed and mounted to maximize air flow, power conditioning correctly installed, and overall layout and installation of components meets manufacturer's recommendations and standard industry accepted practices.

8. All other control panel circuitry.

9. The following systems tests shall be performed:
   a. Demonstrate the ability to share data between operator workstations and servers.
   b. Demonstrate the ability of each workstation to print reports on all designated report printers.
   c. Demonstrate the ability for each workstation to read and write designated files from servers and other workstations on the network.
   d. Demonstrate the operability of all back-up and mass storage equipment.
   e. Demonstrate communication failure and recovering self-healing ring testing.
   f. Demonstrate total power failure and recovery of each control panel and PC. The UPS shall be removed for this test.
   g. Demonstrate the capabilities of the historical server.
   h. Demonstrate the failover capabilities of the redundant HMI servers.

D. Upon successful completion of the UFT, the ISS shall submit a record copy of the test results as specified in Part 1. As part of this test results submittal, notify the Engineer and Owner in writing that the system is ready for the WFT. No other notice of Factory test will be accepted. The Engineer and/or Owner shall schedule a test date within 30 days of receipt of this submittal.

3.06 FACTORY TESTING - WITNESSED FACTORY TEST (WFT)

A. The purpose of the WFT is to allow the Engineer and/or Owner representatives to witness the functionality, performance, and stability of the hardware and software system. The WFT shall be run by the ISS and conducted at the ISS's facility.

B. Required Documents for Test

1. Clean set of approved panel drawings and wiring diagrams.

2. Set of contract documents - all drawings and specifications.

3. All documentation related to design changes.

4. Master copy of the ISS developed factory testing signoff forms.

5. Testing procedures.

C. The system must operate continuously throughout the WFT without failure, except where initiated per the established test procedures. Any unanticipated failures may, at the Owner and/or Engineer's option, result in the overall WFT being deemed unsuccessful. All deficiencies identified during these tests shall be corrected and re-tested prior to completing the WFT or shipment of panels to jobsite as determined by the Owner/Engineer.

D. Tests to be performed during the WFT shall include, but not be limited to, the following:

1. A repeat of all tests specified in the UFT.

E. The daily schedule during these tests shall be as follows:

1. Morning meeting to review the day's test schedule.

2. Scheduled tests and sign-offs.

3. End of day meeting to review the day's test results and to review or revise the next day's test schedule.

4. Unstructured testing period by the witnesses.

F. Upon successful completion of the WFT, the ISS shall submit a record copy of the test results as specified in Part 1.

3.07 FIELD TESTING - OPERATIONAL READINESS TEST (ORT)

A. The purpose of the ORT is to check that the process equipment, instrument installation, instrument calibration, instrument configuration, field wiring, control panels, and all other related system components are ready to monitor and control the processes. This test will determine if the equipment is ready for operation.

B. This test shall take place prior to FDT and startup. Prior to starting this test, relevant process equipment shall be installed and mechanically tested, instruments installed, control panels installed, and field wiring complete.

C. Required Documents for Test

1. Master copy of the ISS developed field testing signoff forms.

2. Testing procedures.

D. These inspections, calibrations, and tests do not require witnessing. However, the Engineer may review and spot-check the testing process periodically. Any deficiencies found shall be corrected by the ISS prior to commencement of the Functional Demonstration Test.

E. The ISS shall maintain the Sign-off forms and the Calibration forms at the job site and make them available to the Engineer/Owner at any time.

F. The following tests shall be performed as part of the ORT:

1. Input/Output (I/O) testing, from the field terminals to the HMI.

2. Testing of both SCADA communication methods, and switchover between them.

G. Instrument calibration, configuration, and set-up

1. Calibrate, configure, and set-up all components and instruments to perform the specified functions.

2. Calibration form
   a. For any component or instrument requiring dip switch settings, calibration, or custom configuration, maintain a calibration form in the field documenting this information. These forms shall provide a summary of the actual settings used in the field to allow an Instrument technician to replace the device entirely and configure it to function as it did before.
   b. This information shall be added to the Instrument data sheet, shall be added to a copy of the manufacturer's standard "Configuration Sheet", or a separate form shall be created.
      1) If a separate form, the form shall list the Project Name, Loop Number, ISA Tag Number, I/O Module Address, Manufacturer, Model Number/Serial Number, Output Range and Calibrated Value.
   c. Some examples of required information are:
      1) For Discrete Devices: Actual trip points and reset points.
      2) For Instruments: Any configuration or calibration settings entered into instrument
      3) For Controllers: Mode settings (PID).
      4) For I/O Modules: Dip switch settings, module configuration (if not documented in the native programming documentation).
   d. Maintain a copy of these forms in the field during testing and make them available for inspection at any time.

e. For any device that allows a software back-up of configuration files to a laptop, make the configuration files available to the Engineer/Owner for inspection. Submit as part of the Final System Documentation.

H. I/O Testing

1. The purpose of the I/O testing is to check that the process equipment, instrument installation, calibration, configuration, field wiring, and the control panels are set-up correctly to monitor and control the processes. This test is commonly referred to as a "loop test" or an I/O checkout.

2. ISS in conjunction with the contractor shall test signals under process conditions. The preferred test method will always be to execute the test wherever possible to the end elements. For example, the preferred test will prove valve open/close limit switches by operating the valve, not by installing a jumper on the limit switch contacts. However, if the equipment or process is not available to test a signal over its entire calibrated range, the ISS may test using a simulation method and make a note on the sign-off form.

3. The following I/O tests shall be performed:
   a. Discrete Input – At the device or instrument, change signal condition from the inactive to active state. Observe results on all indicators within the loop such as the HMI screens, the OIT screens, pilot lights, horns, beacons etc.
   b. Analog Input – Test the analog signal over the entire engineering range at various intervals including 0, 50%, and 100% as well as on increasing and decreasing range. Observe results on all indicators within the loop such as the HMI screens, the OIT screens, recorders, digital indicators, etc.
   c. Discrete output signals shall be tested by switching the equipment to manual control at the HMI nodes and turning the output on or using other means to turn the output on. Then verify the equipment responds accordingly.
   d. Analog output signals shall be tested by switching the equipment to manual control at the HMI nodes and turning the output on or other means to turn the output on. Then verify the equipment responds accordingly.

I. Repeat all systems tests specified under factory testing.

J. UPS shall be tested to verify the UPS switch power correctly while keeping all UPS powered loads online. Also, test the sizing of the UPS by switching off line power to the UPS and verify if they maintain the specified run time.

K. For all panels with enclosures modified by this contract, internal control panel temperature shall be tested under full running conditions to ensure proper cooling/ventilation is being provided.

L. Upon successful completion of the ORT, the ISS shall submit a record copy of the test results as specified in Part 1 and request the scheduling of the FDT.

3.08 FIELD TESTING - FUNCTIONAL DEMONSTRATION TEST (FDT)

A. After the facility is started-up and running the treatment process in automatic control to the extent possible, a Functional Demonstration Test shall be performed. The purpose of the FDT

is to allow the Engineer and/or Owner representatives to witness the actual functionality, performance, and stability of the system while connected to the process equipment.

B. Required Documents for Test

1. Set of panel drawings and wiring diagrams from ORT with corrections noted

2. Set of contract documents - all drawings and specifications.

3. All documentation related to design changes.

4. Signed-off master copy of the ISS developed field testing signoff forms.

5. Testing procedures.

6. Copy of completed calibration forms.

7. One copy of all O & M Manuals for ISS supplied equipment.

C. A witnessed FDT shall be performed on each process area. To the extent possible, repeat the testing performed during the ORT.

D. The daily schedule specified to be followed during the factory tests shall also be followed during the FDT.

E. Punchlist items and resolutions noted during the test shall be documented on the Punchlist/Resolution form. In the event of rejection of any part or function test procedure, the ISS shall perform repairs, replacement, and/or retest within 10 days.

F. Upon successful completion of the FDT, the ISS shall submit a record copy of the test results as specified in Part 1.

3.09 FIELD TESTING - SITE ACCEPTANCE TEST (SAT)

A. After completion of the FDT, and the system is started-up and running the treatment process in automatic control to the extent possible, the system shall undergo a site acceptance test.

B. While this test is proceeding, the Engineer and Owner shall have full use of the system. Only plant operating personnel shall be allowed to operate equipment associated with live plant processes. Plant operations shall remain the responsibility of Owner and the decision of plant operators regarding plant operations shall be final.

C. During this test, ISS personnel shall be present as required to address any potential issues that would impact system operation. The ISS is expected to provide personnel for this test who have an intimate knowledge of the hardware and software of the system. When ISS personnel are not on-site, the ISS shall provide cell phone/pager numbers that Owner personnel can use to ensure that support staff are available by phone and/or on-site within four hours of a request by operations staff.

D. Any malfunction during the test shall be analyzed and corrections made by the ISS. In the event of rejection of any part or function, the ISS shall perform repairs or replacement within 5 days.

E. Throughout the duration of the SAT, no software or hardware modifications shall be made to the system without prior approval from the Owner or Engineer.

3.10 CERTIFICATE OF INSTALLATION

A. Following successful completion of the SAT test, the ISS shall submit a Certification of Installation for the system.

END OF SECTION

© 2019 CDM Smith
All Rights Reserved

THIS PAGE INTENTIONALLY LEFT BLANK

© 2019 CDM Smith
All Rights Reserved

SECTION 16950
PLC PROGRAMMING

PART 1 GENERAL

1.01 DESCRIPTION OF WORK

A. In general, the work specified in this section of the specifications includes the furnishing of all labor, material, hardware, software, and services necessary to define, develop, create, document, test and demonstrate proper operation of a new JEA Master Booster Pump Station PLC Program to provide complete automatic monitoring and control of the new facilities.

B. Simatic Step 7 engineering software shall be used for all PLC programming. The Step 7 version to be used shall be the latest version presently utilized by JEA. Upon final acceptance, electronic copies of the final programming shall be included within the O&M manuals.

C. Unless indicated otherwise, prior to shipment, each PLC shall be loaded and tested at the Instrumentation system contractor/supplier manufacturing facility, and shall be witnessed and approved by JEA.

1.02 STRUCTURED PROGRAMMING

A. Structured Programming is the method of breaking a Process down into manageable Tasks or in Siemens Step 7 terms Blocks. These Blocks of code perform specific tasks in the process. They are also to be self-contained meaning that no hard coded Timers or other pieces of code are to be in them. Nothing is to be accessed internally to the block so data can only be brought in through inputs and written out on outputs of the block.

B. On the outputs diagnostic information needs to be provided so that it doesn't need to be opened. By knowing how the block functions and looking at the Inputs/Outputs you should be able to troubleshoot the block without opening it.

C. Each block must be understood as a specific function of the process. It is important to not overcomplicate the block by trying to do too many things. Everything must be broken down into manageable tasks within the processes. The idea is to develop a library of Blocks that can be used in multiple processes. This way code becomes familiar and has been proven to work. This therefore reduces development time and troubleshooting.

D. The new JEA Master Booster Pump Station PLC Program shall conform to existing JEA Master Pump Station PLC programming standards. Accordingly, the new Master Booster Pump Station PLC Program structure shall be made up of two main sections which are OB1 and OB35.

1. OB1 is called every scan and is where the main program resides.

2. OB35 is only called every 100ms and is where the rest of the program resides.

3. Preliminary OB1 and OB35 program structures are shown on the drawings, and are to be used as a guideline for the new JEA Master Booster Pump Station PLC Program.

1.03 SUBMITTALS

A. The SCADA System Integrator shall prepare and submit for approval a Functional Specification document to be used as a guideline prior to development a Software Design Document.

B. In general, the Functional Specification shall include the following:

1. Index

2. General description of the system: A brief description of the process should be supplied, its subsystems, main stages of the process and characteristics.

3. List of all subsystems: List the name of all subsystems, general function and its PLC identification.

4. General information: Describe the name of the subsystem, location, function, functional requirements.

5. Risk detection: Identify all the risk for the process, operator, or for the equipment itself.

6. List of I/O and Instruments: List Location, Type, Tag, I/O address, Range and Description.

7. Process Control: Identify all the process control involved, description of function, the operating modes (auto / manual), bump less transfer if needed, the control logic in a block or flowchart diagram, and Set-points used, range and units. Define all formulas used for control and all interlock conditions.

8. List of alarms by type of devices: All alarms should be listed, its text, condition to trigger, system/operator response, description.

9. System Trends & Reports: All report and trends should be listed with a name, objective and an example of them.

10. Appendix: The P&ID, workflow diagrams, communication protocols and hardware diagrams.

C. Following approval of the Functional Specification, the System Integrator shall prepare and submit for approval a complete Software Design Document. The software design document shall include:

1. PLC programming structure diagram.

2. Listing of all function blocks with full functional description of each block.

PART 2 FUNCTION BLOCK DESCRIPTIONS

2.01 GENERAL CRITERIA

A. The new JEA Master Booster Pump Station PLC Program shall conform to existing JEA Master Pump Station PLC programming standards. Accordingly, the new Master Booster Pump

Station PLC Program structure shall be made up of two main sections which are OB1 and OB35.

B. OB1 is called every scan and is where the main program resides.

C. OB35 is only called every 100ms and is where the rest of the program resides.

D. Preliminary OB1 and OB35 program structures are shown on the drawings, and are to be used as a guideline for the new JEA Master Booster Pump Station PLC Program.

2.02 FUNCTIONAL DESCRIPTIONS FOR JEA STANDARD OB1 BLOCKS

A. Date_Time ->FB23 Reads System Time

This block will convert time from BCD format to Integer format. The Date and Time is provided from OB1 Local Memory tag OB1_DATE_TIME. This tag starts at Local Byte address 12.

B. TOD_Pulse ->FB24 Sends Pulse at Midnight

This block will activate the "Pulse" output high for one Scan when "Hour", "Min", and "Sec" inputs match the "Hour_SP", "Min_SP", and "Sec_SP" setpoints.

C. Pulse_Times ->FB28 Pulses Sec, Hour and Min

This block will send a pulse on every Second, Minute and Hour. Other blocks will use this information for triggers.

D. CPU_Activity ->FB80 Pulses Sec, Hour and Min

This block will increment from 0-999 every 10 seconds. The purpose for this is to send out a heartbeat over communications to detect communication loss in SCADA.

E. Power_Monitor -> FB77 Monitors the UPS

This block will Monitor the Battery and Power Conditions of the UPS. The outputs and how they function are as follows:

Batt_Fail_ALM) Bool; 1=Battery Failed Alarm. This alarm is set if "Batt_Fail_Ind" input is high for more than 3 Seconds.

(Power_Fail_ALM) Bool; 1=Power Failed Alarm. This alarm is set if "Power_Fail_Ind" input is high for more than 5 Minutes.

F. Generator_Monitor ->FB76 Monitors the Generator

This block will monitor the generator and give output status information derived from the Inputs and Setpoints. The generator inputs/outputs and how they function are described as follows:

Inputs:

(Gen_Fault) Bool; 0=Generator Fault, 1=OK.

(TS_Utility_PWR) Bool; 1=Transfer Switch Utility Power.

(TS_Emergency_PWR) Bool; 1=Transfer Switch Emergency Power.

(Gen_Run) Bool; 1=Generator Running.

(Normal_PWR_Avail) Bool; 1=Normal Power Available.

(Fuel_Leak) Bool; 0=Fuel Leak, 1=OK.

(Gallons_In_Tank) Real; How many gallons of fuel in tank.

Setpoints:

(Gen_Installed_SP) Bool; 1=Generator Installed

(Max_Fuel_Cap_SP) Int; Maximum Fuel Capacity of Tank

(Gen_KW_Rating_SP) Real; Generators KW Rating

(Gen_RTExcess_SP) Generator Run Timer Excessive Setpoint in Minutes

(Gen_FailStop_T_SP) Generator Fail to Stop Timer Setpoint in Minutes

Outputs:

Gen_Running) Bool; 1=Generator Running. Derived directly from the "Gen_Run" input.

(XFR_Switch_Utility) Bool; 1=Transfer Switch is on Utility. Derived directly from "TS_Utility_PWR" input.

(XFR_Switch_Emerg) Bool; 1=Transfer Switch is on Emergency. Derived directly from "TS_Emergency_PWR" input.

(Normal_PWR_Avail) Bool; 1=Normal Power Available. Derived directly from "Norm_PWR_Avail" input.

(Normal_PWR_Avail) Bool; 1=Normal Power Available. Derived directly from "Norm_PWR_Avail" input.

(XFR_Switch_ALM) Bool; 1=Transfer Switch has Failed. This Alarm is set if the transfer switch is stuck between states and fails to go either Emergency or Normal position within 3 seconds.

(Gen_RT_Excess_ALM) Bool; 1=Generator Runtime is Excessive. This Alarm is set if the generator is Running and the transfer switch is in the Emergency position for longer than the "Gen_RTExces_SP" time allocates.

(Gen_FailStop_ALM) Bool; 1=Generator Failed to Stop. This Alarm is set if the generator is Running and the transfer switch is in the Normal position for longer than the Gen_FailStop_T_SP" time allocates.

(Gen_Fault_ALM) Bool; 1=Fault on Generator. Derived directly from "Gen_Fault" input.

(Fuel_Leak_ALM) Bool; 1=Fuel Leak. Derived directly from "Fuel_Leak" input.

(Gen_Runtime) Int; Time Generator has been Running in Minutes. Monitors the "Gen_Run" input.

(Max_Fuel_Capacity) Int; Maximum Fuel Capacity of the Tank. This is derived from the "Max_Fuel_Cap_SP".

(Max_Fuel_RT_HRs) Int; Maximum Fuel Runtime Hours Generator has. This calculates how long the generator can run based on "Gallons_In_Tank" and assuming the generator is running at full capacity. It's calculated as follows. Gallons_Hour_Used = 0.07 * "Gen_KW_Rating_SP" Max_Fuel_RT_HRs = Gallons_In_Tank / Gallons_Hour_Used

(Max_Fuel_Capacity) Int; Maximum Fuel Capacity of the Tank

(XFR_Pos_Array) Int; Transfer Switch Position 1 = Utility 2 = Emergency 0 = Transition 3 = Failed

G. Jockey_Booster_Mode ->FBxx Controls transfer from Jockey to Booster

This block will monitor the station flow, pressure, number of jockey pumps in operation, number of jockey pumps called to run, number of booster pumps in operation, and number of booster pumps called to run, and shall determine the optimum time to transfer pump station operation from jockey to booster, or booster to jockey.

H. Jockey_Logic -> FBxx How many Jockey Pumps to Run

This block will control the Jockey Pump Logic derived from the inputs. The Jockey Pump Logic functions are described below:

If Enable=1 the program will be executed, otherwise “Pumps_Called_For” will be set to zero and the program will immediately exit.

“Press_Trans_Err” indicates a pressure transducer failure on the system. If this value=1, the system will be controlled by the “Press_SW_Stat” input. When Press_SW_Stat=1, then Pumps_Called_For=Max_Pumps_Trans_Err, otherwise Pumps_Called_For=0. “Max_Pumps_Trans_Err” is used to prevent all the pumps from coming on at once and overloading the system.

If Enable=1 and Press_Trans_Err=0, then the system is in standard mode of operation. The standard mode will run the system off of the “Pressure” input and “PID Speed” command.

First, the program will calculate setpoints to determine when to increase or decrease the number of running pumps. Setpoint inputs (Low Press, Hi Press, Lag ST, Lag STP) are offsets in reference to “Press_Reg_SP”.

The “SP_In_Transition” input is used to delay the calling of the next pump. The “SP_In_Transition” will come from the block Press_Reg_SP_Delay and will ease the transition of the current pressure to “Press_Reg_SP”. While this input=1, another pump can't be called for.

The timers “Hi_Press_TMR” and “Low_Press_TMR” are also used in delaying increasing and decreasing the number of pumps called for. The high pressure timer delay will be set by the

"High_Press_T_SP" setpoint. The low pressure timer delay will be set by the "Low_Press_T_SP" setpoint.

The "Hi_Press_TMR" will indicate that a pump needs to be turned ON. It will only turn on a pump if the following conditions are True: (PID_Speed >= PID_Per_Inc_Lev_SP) AND (Pressure >= Hi_Press_SP) AND (Hi_Press_TMR.Q=1) AND NOT(SP_In_Transition)) OR ((Pumps_Called_For = 0) AND (Pressure >= Hi_Press_SP) AND NOT (Hi_Press_TMR.Q))

The "Low_Press_TMR" will indicate that a pump needs to be turned OFF. It will only turn off a pump if the below conditions are True: (PID_Speed <= PID_Per_Dec_Lev_SP) AND (Pressure <= Low_Press_SP) AND (Pressure <= Lag_STP_SP) AND (Low_Press_TMR.Q=1)

The Lag ST SP and Lag STP SP setpoints allow finer control over how many pumps can run and when they start and stop. If the next Level pump is called to start/stop, it will not do so unless the corresponding lag pressure setpoint is met.

Rather than turning on the lag Jockey pump, the lag jockey pump call to run shall be used as in input to the jockey_booster_mode block to transfer pump station operation to the booster pumps.

Inputs:

(Enable) Bool; Enable pump-down logic block.

(Press_SW_Stat) Bool; Backup pressure switch status. 1= switch activated.

(Press_Trans_Err) Bool; Pressure transducer error. 1=error.

(XFR_Switch_Emerg) Bool; Transfer Switch in Emergency position. 1=Transfer Switch in Emergency.

(SP_In_Transition) Bool; Pressure setpoint in transition. 1=transitioning.

(Pressure) Real; Control pressure reading.

(PID_Speed) Real; Speed command from PID.

Setpoints:

(Press_Reg_SP) Real; Pressure regulation setpoint.

(Low_Press_Offset_SP) Real; Low pressure setpoint. Offset with reference to pressure regulation setpoint.

(Hi_Press_Offset_SP) Real; High pressure setpoint. Offset with reference to pressure regulation setpoint.

(PID_Per_Inc_Lev_SP) Real; PID Speed to increase number of pumps.

(PID_Per_Dec_Lev_SP) Real; PID Speed to decrease number of pumps.

(Low_Press_T_SP) Time; Low pressure timer setpoint. Time when pressure is below low setpoint before the number of pumps running is decreased.

(Hi_Press_T_SP) Time; High pressure timer setpoint. Time when pressure is above high setpoint before the number of pumps running is increased.

(Lag_3_STP_SP) Real; Lag 3 stop setpoint. Offset with reference to pressure regulation setpoint before fourth pump is turned off.

(Lag_3_ST_SP) Real; Lag 3 start setpoint. Offset with reference to pressure regulation setpoint before fourth pump is turned on.

(Lag_2_STP_SP) Real; Lag 2 stop setpoint. Offset with reference to pressure regulation setpoint before third pump is turned off.

(Lag_2_ST_SP) Real; Lag 3 start setpoint. Offset with reference to pressure regulation setpoint before third pump is turned on.

(Lag_STP_SP) Real; Lag stop setpoint. Offset with reference to pressure regulation setpoint before second pump is turned off.

(Lag_ST_SP) Real; Lag start setpoint. Offset with reference to pressure regulation setpoint before second pump is turned on.

(Max_Pumps_Trans_Err_SP) Int; Maximum number of pumps to run in the event of pressure transducer failure.

(Max_Pumps_On_Gen_SP) Int; Maximum number of pumps to run when station is on generator power.

(Number_of_Pumps_SP) Int; Number of pumps at station.

Outputs:

(Pumps_Called_For) Int; Number of pumps being called to run.

I. 2_Pump_Alt -> FBxx Alternate the Jockey Pumps

This Block will handle the alternation of up to two pumps. Each time the number of pumps called “Pumps_Called_For” reaches zero, it will alternate to the next pump in the sequence.

The Pump Enable input must = 1 to be able to run that pump. For example if Pump_2_EN=0 it will never be called to run so Pump_2_Run can never be activated.

Pump Fixed Position manually assigns the pump’s position in the alternation sequence. If this value = 0, then that pump will alternate normally. For example, if Pump_2_Fixed_Pos=2 then Pump 2 will always be the second pump called to start.

When a logic 1 is sent to “Manual_Alternate”, the pump sequence will be forced to increment to the next sequence in the rotation. This is a latched input and must go back to logic 0 before it will alternate again.

“Hour_Alternate” determines how many hours pass before the sequence will be forced to alternate, regardless of its current state. For example, the block will automatically alternate to the next pump every 6 hours if Hour_Alternate=6. Setting this input to 0 will disable it.

Inputs:

(Pump_1_En) Bool; Pump 1 is available.

(Pump_2_En) Bool; Pump 2 is available.

(Manual_Alternate) Bool; Force pump sequence to alternate.

Setpoints:

(Pumps_Called_For) INT; The number of pumps that need to be running.

(P1_Fixed_Pos) Int; Pump 1 is set to a fixed position in the alternation sequence. 0=not fixed.

(P2_Fixed_Pos) Int; Pump 2 is set to a fixed position in the alternation sequence. 0=not fixed.

Outputs:

(Pump_1_Run) Bool; Turn on Pump 1.

(Pump_2_Run) Bool; Turn on Pump 2.

(Pump_1_Lead) Bool; Pump 1 is in Lead position.

(Pump_2_Lead) Bool; Pump 2 is in Lead position.

J. Booster_Logic -> FBxx How many Booster Pumps to Run

This block will control the Booster Pump Logic derived from the inputs. The Booster Pump Logic functions are described below:

If Enable=1 the program will be executed, otherwise “Pumps_Called_For” will be set to zero and the program will immediately exit.

“Press_Trans_Err” indicates a pressure transducer failure on the system. If this value=1, the system will be controlled by the “Press_SW_Stat” input. When Press_SW_Stat=1, then Pumps_Called_For=Max_Pumps_Trans_Err, otherwise Pumps_Called_For=0.

“Max_Pumps_Trans_Err” is used to prevent all the pumps from coming on at once and overloading the system.

If Enable=1 and Press_Trans_Err=0, then the system is in standard mode of operation. The standard mode will run the system off of the “Pressure” input and “PID Speed” command.

First, the program will calculate setpoints to determine when to increase or decrease the number of running pumps. Setpoint inputs (Low Press, Hi Press, Lag ST, Lag STP) are offsets in reference to “Press_Reg_SP”.

The “SP_In_Transition” input is used to delay the calling of the next pump. The “SP_In_Transition” will come from the block Press_Reg_SP_Delay and will ease the transition of the current pressure to “Press_Reg_SP”. While this input=1, another pump can't be called for.

The timers “Hi_Press_TMR” and “Low_Press_TMR” are also used in delaying increasing and decreasing the number of pumps called for. The high pressure timer delay will be set by the “High_Press_T_SP” setpoint. The low pressure timer delay will be set by the “Low_Press_T_SP” setpoint.

The “Hi_Press_TMR” will indicate that a pump needs to be turned ON. It will only turn on a pump if the following conditions are True: (PID_Speed >= PID_Per_Inc_Lev_SP) AND (Pressure >= Hi_Press_SP) AND (Hi_Press_TMR.Q=1) AND NOT(SP_In_Transition)) OR ((Pumps_Called_For = 0) AND (Pressure >= Hi_Press_SP) AND NOT(Hi_Press_TMR.Q))

The “Low_Press_TMR” will indicate that a pump needs to be turned OFF. It will only turn off a pump if the below conditions are True: (PID_Speed <= PID_Per_Dec_Lev_SP) AND (Pressure <= Low_Press_SP) AND (Pressure <= Lag_STP_SP) AND (Low_Press_TMR.Q=1)

The Lag ST SP and Lag STP SP setpoints allow finer control over how many pumps can run and when they start and stop. If the next Level pump is called to start/stop, it will not do so unless the corresponding lag pressure setpoint is met.

Inputs:

(Enable) Bool; Enable pump-down logic block.

(Press_SW_Stat) Bool; Backup pressure switch status. 1= switch activated.

(Press_Trans_Err) Bool; Pressure transducer error. 1=error.

(XFR_Switch_Emerg) Bool; Transfer Switch in Emergency position. 1=Transfer Switch in Emergency.

(SP_In_Transition) Bool; Pressure setpoint in transition. 1=transitioning.

(Pressure) Real; Control pressure reading.

(PID_Speed) Real; Speed command from PID.

Setpoints:

(Press_Reg_SP) Real; Pressure regulation setpoint.

(Low_Press_Offset_SP) Real; Low pressure setpoint. Offset with reference to pressure regulation setpoint.

(Hi_Press_Offset_SP) Real; High pressure setpoint. Offset with reference to pressure regulation setpoint.

(PID_Per_Inc_Lev_SP) Real; PID Speed to increase number of pumps.

(PID_Per_Dec_Lev_SP) Real; PID Speed to decrease number of pumps.

(Low_Press_T_SP) Time; Low pressure timer setpoint. Time when pressure is below low setpoint before the number of pumps running is decreased.

(Hi_Press_T_SP) Time; High pressure timer setpoint. Time when pressure is above high setpoint before the number of pumps running is increased.

(Lag_3_STP_SP) Real; Lag 3 stop setpoint. Offset with reference to pressure regulation setpoint before fourth pump is turned off.

(Lag_3_ST_SP) Real; Lag 3 start setpoint. Offset with reference to pressure regulation setpoint before fourth pump is turned on.

(Lag_2_STP_SP) Real; Lag 2 stop setpoint. Offset with reference to pressure regulation setpoint before third pump is turned off.

(Lag_2_ST_SP) Real; Lag 3 start setpoint. Offset with reference to pressure regulation setpoint before third pump is turned on.

(Lag_STP_SP) Real; Lag stop setpoint. Offset with reference to pressure regulation setpoint before second pump is turned off.

(Lag_ST_SP) Real; Lag start setpoint. Offset with reference to pressure regulation setpoint before second pump is turned on.

(Max_Pumps_Trans_Err_SP) Int; Maximum number of pumps to run in the event of pressure transducer failure.

(Max_Pumps_On_Gen_SP) Int; Maximum number of pumps to run when station is on generator power.

(Number_of_Pumps_SP) Int; Number of pumps at station.

Outputs:

(Pumps_Called_For) Int; Number of pumps being called to run.

K. 6_Pump_Alt -> FBxx Alternate the Booster Pumps

This Block will handle the alternation of up to six pumps. Each time the number of pumps called "Pumps_Called_For" reaches zero, it will alternate to the next pump in the sequence.

The Pump Enable input must = 1 to be able to run that pump. For example if Pump_3_EN=0 it will never be called to run so Pump_3_Run can never be activated. The input "Split_Suction" determines the alternation sequence. For stations that have less than 6 pumps or do not have split suction, this input must = 0 and the alternation sequence will use 1,2,3,4,5,6 as the order. Otherwise, this must = 1 and the alternation sequence will use 1,4,2,5,3,6 as its order.

Pump Fixed Position manually assigns the pump's position in the alternation sequence. If this value = 0, then that pump will alternate normally. For example, if Pump_3_Fixed_Pos=2 then Pump 3 will always be the second pump called to start.

When a logic 1 is sent to "Manual_Alternate", the pump sequence will be forced to increment to the next sequence in the rotation. This is a latched input and must go back to logic 0 before it will alternate again.

"Hour_Alternate" determines how many hours pass before the sequence will be forced to alternate, regardless of its current state. For example, the block will automatically alternate to the next pump every 6 hours if Hour_Alternate=6. Setting this input to 0 will disable it.

Inputs:

(Pump_1_En) Bool; Pump 1 is available.

(Pump_2_En) Bool; Pump 2 is available.

(Pump_3_En) Bool; Pump 3 is available.

(Pump_4_En) Bool; Pump 4 is available.

(Pump_5_En) Bool; Pump 5 is available.

(Pump_6_En) Bool; Pump 6 is available.

(Split_Suction) Bool; Determines alternation sequence. 0=1,2,3,4, 5, 6; 1=1,4,2,5, 3, 6.

(Manual_Alternate) Bool; Force pump sequence to alternate.

Setpoints:

(Pumps_Called_For) INT; The number of pumps that need to be running.

(P1_Fixed_Pos) Int; Pump 1 is set to a fixed position in the alternation 0=not fixed.

(P2_Fixed_Pos) Int; Pump 2 is set to a fixed position in the alternation 0=not fixed.

(P3_Fixed_Pos) Int; Pump 3 is set to a fixed position in the alternation 0=not fixed.

(P4_Fixed_Pos) Int; Pump 4 is set to a fixed position in the alternation 0=not fixed.

(P5_Fixed_Pos) Int; Pump 5 is set to a fixed position in the alternation 0=not fixed.

(P6_Fixed_Pos) Int; Pump 6 is set to a fixed position in the alternation 0=not fixed.

Outputs:

(Pump_1_Run) Bool; Turn on Pump 1.

(Pump_2_Run) Bool; Turn on Pump 2.

(Pump_3_Run) Bool; Turn on Pump 3.

(Pump_4_Run) Bool; Turn on Pump 4.

(Pump_5_Run) Bool; Turn on Pump 5.

(Pump_6_Run) Bool; Turn on Pump 6.

(Pump_1_Lead) Bool; Pump 1 is in Lead position.

(Pump_2_Lead) Bool; Pump 2 is in Lead position.

(Pump_3_Lead) Bool; Pump 3 is in Lead position.

(Pump_4_Lead) Bool; Pump 4 is in Lead position.

(Pump_5_Lead) Bool; Pump 5 is in Lead position.

(Pump_6_Lead) Bool; Pump 6 is in Lead position.

L. MOA ->FB74 Selections Man, Off, Auto

This block will control the Manual, Off, Auto settings of the pump through the Remote SCADA System HMI. This Block will only have control if it's set into Auto or Remote at the Station Panel. The logic control is as described as follows:

Inputs:

(Call_to_Run) Bool; Indicates if System is calling for it to Run.

(Fault) Bool; 1=External Fault.

(Manual_HMI) Bool; Remote SCADA command, 1=Set, 0=No Command.

(Off_HMI) Bool; Remote SCADA command, 1=Set, 0=No Command.

(Auto_HMI) Bool; Remote SCADA command, 1=Set, 0=No Command.

Setpoints:

(Man_Speed_SP) Real; Manual Speed Setpoint for Manual Mode.

(Auto_Speed_SP) Real; Auto Speed Setpoint for Auto Mode, typically from PID.

(Max_Single_Speed_SP) Real: Maximum Speed Setpoint for Single Pump Operation.

Outputs:

(Run_CMD) Bool; Run command. This output is only active in the Auto and Manual Mode. It's disabled in the Off Mode. Refer to the states below.

(Manual_State) Bool; 1=Manual Mode. If the pump is in "Manual_State" and it Faults out it will set itself to "Off_State"=1.

(Off_State) Bool; 1=Off Mode. The Run_CMD output is Disabled

(Auto_State) Bool; 1= Auto Mode. If "Auto_State"=1 AND "Call_to_Run"=1 AND "Fault"=0 then the "Run_CMD"=1.

(Speed) Real; Off->Speed=0, Manual->Speed=Man_Speed_SP, Auto->Speed=Auto_Speed_SP

(MOA_Array) Int; 0=Off, 1=Manual, 2=Auto

M. PPO_4_Control -> FB57 VFD Control Profibus

Intelligent Motor Control block that talks to the device over Profibus.

Inputs:

(DP_Comm_Status) Bool; Device status. Tells block if it can communicate with the device based on the results of “PollRacks”.

(HW_Read_Add) Int; Starting address of the output register of the device.

(HW_Write_Add) Int; Starting address of the input register of the device.

(Run) Bool; Run command.

(Operate) Bool; Enable device operation.

(Direction) Bool; Direction of motor rotation. 0=Forward, 1=Reverse.

(Fault_Reset) Bool; Reset non-persistent faults.

Setpoints:

(Speed_SP): Real; Command speed in Hertz.

Outputs:

(Stat_Run) Bool; Run status. 1=Device running.

(Fault) Bool; Fault status. 1=Device fault.

(Remote) Bool; Remote status. 0=Device in local control, 1=Device in PLC control.

(Speed) Real; Speed reference in Hertz. Actual speed as reported by device.

(Current) Int; The motor's current consumption.

(PZD4) Word; Spare output register.

(PZD5) Word; Spare output register.

(PZD6) Word; Spare output register.

N. Pump_Vibe_Mon -> FB33 Vibration Monitor

This block is used to detect high vibration on a pump and alarm if the vibration continues for the threshold time defined in the setpoint.

Inputs:

(Run_Stat) Bool; Run status from the pump.

(Hor_Sensor) Real; Horizontal Scaled Analog input from Vibration Sensor.

(Vert_Sensor) Real; Vertical Scaled Analog input from Vibration Sensor.

Setpoints:

(Vibe_ALM_SP) Real; Vibration Alarm Setpoint.

(ALM_T_SP) Time; Amount of time before alarm is triggered.

Outputs:

(Vibe_ALM) Bool; 1= Vibration Alarm. The Vibe_ALM_SP was reached for the time of ALM_T_SP.

O. CV_Stat -> FB29 Check Valve Status

This block will indicate the Open and Closed status of a check valve. It also has a timer that will alarm if check valve doesn't respond in a specified period of time.

Inputs:

(CV_Open) Bool; 0=Closed, 1=Open.

(Run_Ind) Bool; Run Indicator, 0=Not Running, 1=Running

Setpoints:

(CV_OPN_CLS_T_SP) Time; Open Close Time delay before Alarm is activated.

Outputs:

(CV_Open_Stat) Bool; 0=Closed, 1=Open.

(CV_ALM) Alarm if fails to Open or Close in specified period of time.

P. CV_Derag_Logic -> FBxx This block shall monitor the operation of each pump to determine when a pump check valve needs to be de-ragged. When enabled, the PLC shall monitor the torque of the pump in real time to detect rags building up on the impeller. On detection of a partial blockage the pump will be stopped, reversed for a few seconds and then will run forward again. If the blockage is not cleared, the cleaning cycle shall be repeated. The maximum number of cleaning cycles, time duration of each cleaning cycle, time duration between cleaning cycles, maximum speed, acceleration time, and deceleration time shall be operator adjustable.

Q. Pump_Statistics -> FB75 Statistics of Pumps

This blocks whole purpose is to monitor the pumps Current Starts, Previous Starts, Current Runtime, and Previous Runtime.

R. SINAUT -> FC100 Handles Communication

This will put data in a Data Block so it can be read by SINAUT.

S. TIM_To_CPU_Time -> FC2 Sync to TIM Time

This block will synchronize the TIM time with the PLC.

T. Diesel_Pump ->FBxx Monitors Diesel Standby Pumpr

This block will monitor the diesel standby pump and give output status information derived from the Inputs and Setpoints. The diesel standby pump inputs/outputs and how they function are described as follows:

Inputs:

(DSP_Fault) Bool; 0=Diesel Standby Pump Fault, 1=OK.

(DSP_Run) Bool; 1=Diesel Standby Pump Running.

(DSP_Gallons_In_Tank) Real; How many gallons of fuel in tank.

(Normal_PWR_Avail) Bool; 1=Normal Power Available.

(Emergency_PWR_Avail) Bool; 1=Emergency Power Available.

Setpoints:

(DSP_Installed_SP) Bool; 1=Diesel Standby Pump Installed

(DSP_Max_Fuel_Cap_SP) Int; Maximum Fuel Capacity of Tank

(DSP_Min_Fuel_Cap_SP) Int; Minimum Fuel Reserve of Tank

(DSP_RTExcess_SP) Diesel Standby Pump Run Timer Excessive Setpoint in Minutes

(DSP_FailStart_T_SP) Diesel Standby Pump Fail to Start Timer Setpoint in Minutes

Outputs:

DSP_Running) Bool; 1=Diesel Standby Pump Running. Derived directly from the "DSP_Run" input.

(Normal_PWR_Avail) Bool; 1=Normal Power Available. Derived directly from "Norm_PWR_Avail" input.

(Emergency_PWR_Avail) Bool; 1=Emergency Power Available. Derived directly from "Emergency_PWR_Avail" input.

(DSP_RT_Excess_ALM) Bool; 1=Diesel Standby Pump Runtime is Excessive. This Alarm is set if the diesel standby pump is Running and the station has normal or emergency power for longer than the "DSP_RTExces_SP" time allocates.

(DSP_FailStart_ALM) Bool; 1=Diesel Standby Pump Failed to Start. This Alarm is set if the diesel standby pump is Not Running and the station is without normal or emergency power for longer than the DSP_FailStart_T_SP" time allocates.

(DSP_Fault_ALM) Bool; 1=Fault on Diesel Standby Pump. Derived directly from "DSP_Fault" input.

(DSP_Runtime) Int; Time Diesel Standby Pump has been Running in Minutes. Monitors the "DSP_Run" input.

(DSP_Max_Fuel_Capacity) Int; Maximum Fuel Capacity of the Tank. This is derived from the "DSP_Max_Fuel_Cap_SP".

(DSP_Max_Fuel_Low_ALM) Int; Minimum Fuel Reserve of the Tank. This is derived from the "DSP_Min_Fuel_Cap_SP".

2.03 FUNCTIONAL DESCRIPTIONS FOR JEA STANDARD OB35 BLOCKS

A. PollRacks -> FB12 Detects Devices on Profibus

This block detects any devices on the Profibus network by examining all 128 addresses to detect if a device is available. If the device is available it will return a status of 1 and if it’s not available it will return a 0 for that address.

B. PWR_Mon_DB -> FB79 Monitors the Power

This block just reads the power monitor off of the peripheral address and converts them from Real to Integers to not take up so much data when transmitting it to SCADA.

C. Analog_Scaling ->FC1

The analog scaling is called from FC1 and each analog input is then scaled with the Analog_Filt_Scale block. Each analog transducer will have its own Analog_Filt_Scale.

D. Analog_Filt_Scale -> FB22 Scales Analog Transducer

This block is used to Scale Analog Input, Filter Signal and allow for Overshoot. This code will act as a Filter on Noisy Analog Signals and will Scale the signal. You can select how many times to sample by setting Sample from 2 to 100. 100 samples are the most you can do. Below is a description of all the Inputs and Outputs of the block.

(Bipolar_SP) – 1=Bipolar, 0=Unipolar. Bipolar is used to set up for transducers that go from positive to negative ranges such as a +/-10dc signal. Unipolar is used to set up the transducer for only a positive range such as 4-20ma or 0->10Vdc.

(Max_Range_SP) – Maximum Range Setpoint for scaling the Output. For example if you want to scale a 4-20ma signal to 0-100 set Max_Range_SP=100.

(Min_Range_SP) - Minimum Range Setpoint for scaling the Output. For example if you want

to scale a 4-20ma signal to 0-100 set Min_Range_SP=0.

(Overshoot_SP) – This is the percentage that the analog can go out of range. It allows you to go 0-100% or 0-4863 over Rated Range.

(Error_T_SP) – This is the time that the analog value can go out of range before the "Error" output is activated.

(Samples_SP) – 0-> 1 No Filtering, 2->100 # of Samples, 100 Maximum Samples. This is used for filtering the analog signal. This tells how many times that the signal will be averaged.

E. Scan_Count ->FB82 Pulses every 10 Scans

This block is to be used inside a cyclic interrupt such as OB35 on a 100ms cycle. This block will send out a pulse once every ten cycles therefore creating a one second.

F. Press_Reg_SP_Delay->FB83 Softening of Regulation

This block is designed to delay the transition from the Actual Pressure on the system to the Pressure Regulation Setpoint. This is to prevent rapid ramping of the VFD's to allow the system to slowly bring the PID to the Regulation Setpoint. A time can be entered that is the time it will take to transition to the Setpoint.

Inputs:

(Start_Delay) Bool; 1=Will trigger the Transition from Actual_Press to Press_Reg_SP.

(Pumps_Called) Int; Multiply SP_Delay_Time by this value to increase the transition time.

(Current_Press) Real; Current Pressure of the transducer.

(Mult_Delay_Time) Bool; 1=Enable multiplying SP_Delay_Time by Pumps_Called to increase transition time.

Setpoints:

(Press_Reg_SP) Real; Pressure Regulation Setpoint.

(SP_Delay_Time) Time; Setpoint Delay Time it the time to Transition from Actual_Press to Pres_Reg_SP.

(Cycle) –Time; Cyclic Interrupt Time of the OB that this block is placed in.

Outputs:

(Press_Reg_Trans) Bool; 1=Pressure Regulation is in Transition.

(Press_Reg_Out) Real; Pressure Regulation Output

G. CONT_C -> FB41 PID Loop Controller

Reference the Siemens Step 7 PID controller for a complete description of how this block functions.

H. Pump_Model_Calc -> FB90 Models Pump Curve

The Pump Model Block will model the pump based off of the pump curves provided by the manufacturer. This block requires a Look Up Data Block with all the pump curve information provided. All the look up data will be based on the Outlet Press of the pump.

Look Up Data Block

This program will require a Data Block "DB" to hold the pump curves. The curves that the DB holds are Head, Flow, and Net Positive Suction Head requirement "NPSHr". The DB will also contain how many data points that the curves will contain. The maximum number of points will be limited to 20. The BEP of the pump will also be stored here.

Pump Model Block

In order to calculate the Flow, Power and Efficiency the Outlet Pressure of the pump must be read and converted to the Total Head of the pump. Once the Total Head is calculated the program will look up the pumps curves to find Flow and other information.

Inputs:

(Pump_Run) BOOL; 0=Pump Off, 1=Pump On

(Pump_Power) DWORD; Actual Power supplied to Pump

(Outlet_Press) REAL; Outlet Pressure of the Pump

(Well_Level) REAL; Level in Feet of the Pump

(Hertz) REAL; Frequency supplied to the motor

Setpoints:

(Lookup_DB_SP) INT; Data Block # that contains Pump Curve Data

(Outlet_Press_Height_SP) REAL; Height of the Outlet Pressure device to Inlet of Pump

(Min_Flow_Required) REAL; Minimum flow required from the pump.

(Min_Freq_Set_Point) REAL; The minimum allowed VFD frequency.

Outputs:

(No_Data_ALM) BOOL; 0=Data Available, 1=No Data in Lookup

(Left_of_Curve_ALM) BOOL; 1=Pump running left of curve, 0=OK

(Right_of_Curve_ALM) BOOL; 1=Pump running right of curve, 0=OK

(NPSH_ALM) BOOL; Net Positive Suction Head Alarm

(NPSHa) INT; Net Positive Suction Head Available

(NPSHr) INT; Net Positive Suction Head Required

(Calc_Flow) INT; Calculated Flow

(Calc_Eff) INT; Calculated Efficiency

(BEP) INT; Best Efficiency Point of Pump

(Min_VFD_Freq) REAL; New minimum calculated VFD frequency using affinity laws

I. Analog_Flow_Meter-> FB20 Calculate Pump Flow

This block is used to totalize the flow.

Inputs:

(Flow_GPM) Real; Flow in Gallons Per Minute.

(One_Sec_Pulse) Bool; One Second Pulse used to Calculate Total Flow.

(Month) Int; Current Month of PLC.

(Day) Int; Current Day of PLC.

(Hour) Int; Current Hour of PLC.

(Minute) Int; Current Minute of PLC.

Outputs:

(Cur_Day_Flow) Real; Current Days Flow

(Prev_Day_Flow) Real; Previous Days Flow

(Cur_Month_Flow) Real; Current Months Flow

(Prev_Month_Flow) Real; Previous Months Flow

(Cur_Year_Flow) Real; Current Years Flow.

(Prev_Year_Flow) Real; Previous Year Flow

(Total_Flow) Real; Total Flow

PART 3 EXECUTION

3.01 COORDINATION MEETINGS

A. The System Integrator shall conduct a preliminary PLC programming design coordination meeting with the Owner and Engineer to confirm the basis of design information needed for the development of the Functional Specification document.

Following submittal of the Functional Specifications document, the System Integrator shall conduct a review meeting with the Owner and Engineer to evaluate the submittal review determine the required resolution of all review comments.

Following submittal of the Software Design Document, the System Integrator shall conduct a review meeting with the Owner and Engineer to evaluate the submittal review and determine the required resolution of all review comments.

END OF SECTION

© 2019 CDM Smith
All Rights Reserved

THIS PAGE INTENTIONALLY LEFT BLANK

CDM Smith®

cdmsmith.com