CITY OF JACKSONVILLE, FLORIDA
SEWERAGE IMPROVEMENT PROGRAM
PHASE 3

ST. JOHNS BLUFF MASTER PUMPING STATION

JS NO. 40.7

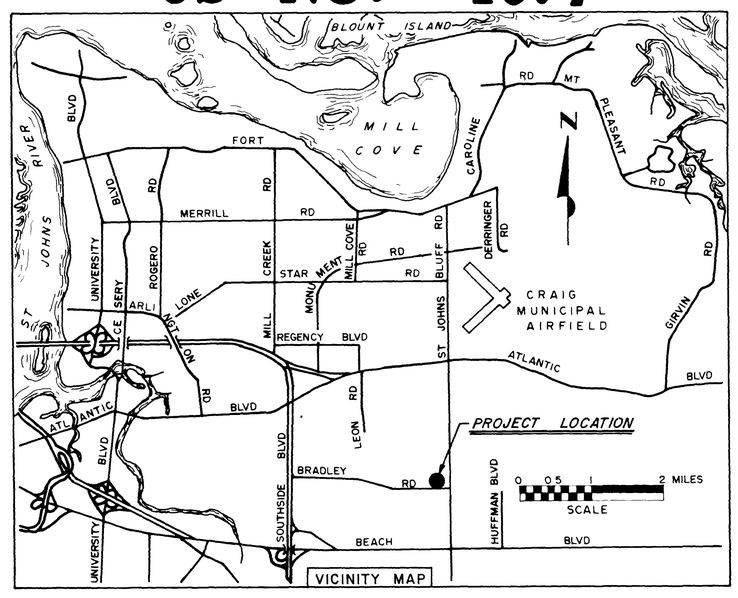

VICINITY MAP

HANS G. TANZLER, JR.
MAYOR

SANITARY APPROVAL
DATE 10-28-81 BY MAB
DEPARTMENT OF PUBLIC WORKS
CITY OF JACKSONVILLE, FLORIDA

FLOOD & ASSOCIATES, INC.
DESIGN CONSULTANT — JACKSONVILLE, FLORIDA

AS BUILT
OCT. 1981

SVERDRUP & PARCEL AND ASSOCIATES, INC.
GENERAL CONSULTANT — JACKSONVILLE, FLORIDA

12895

ENVIRONMENTAL PROTECTION AGENCY NO. C120541010 - PART A

SEPTEMBER 1976

JS-40.7

A.B. COGSWELL CO. JACKSONVILLE FLORIDA

K&E 19 1253 7 73 MC 1227

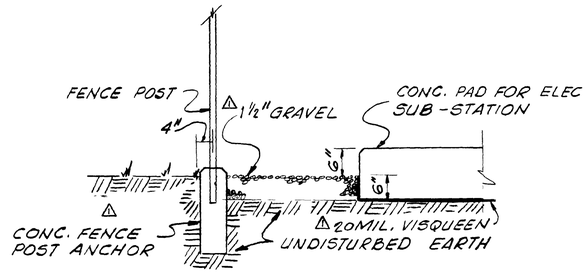

GRAVEL BED DETAIL

N.T.S.

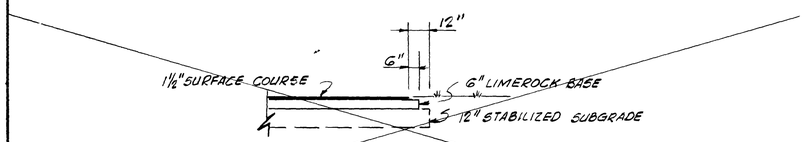

TYP. PAVEMENT SEC.

1½" ASPHALTIC CONCRETE SURFACE COURSE – D.O.T. FLORIDA TYPE S-1, SEE SPECS.
6" COMPACTED LIMEROCK BASE, 100% OF MAX. DENSITY PER. ASTM D-1557-70, STABILIZE TO LBR 70
12" STABILIZED SUBGRADE MIN 98% DENSITY AS PER ASTM D-698-70, STABILIZE TO LBR 40

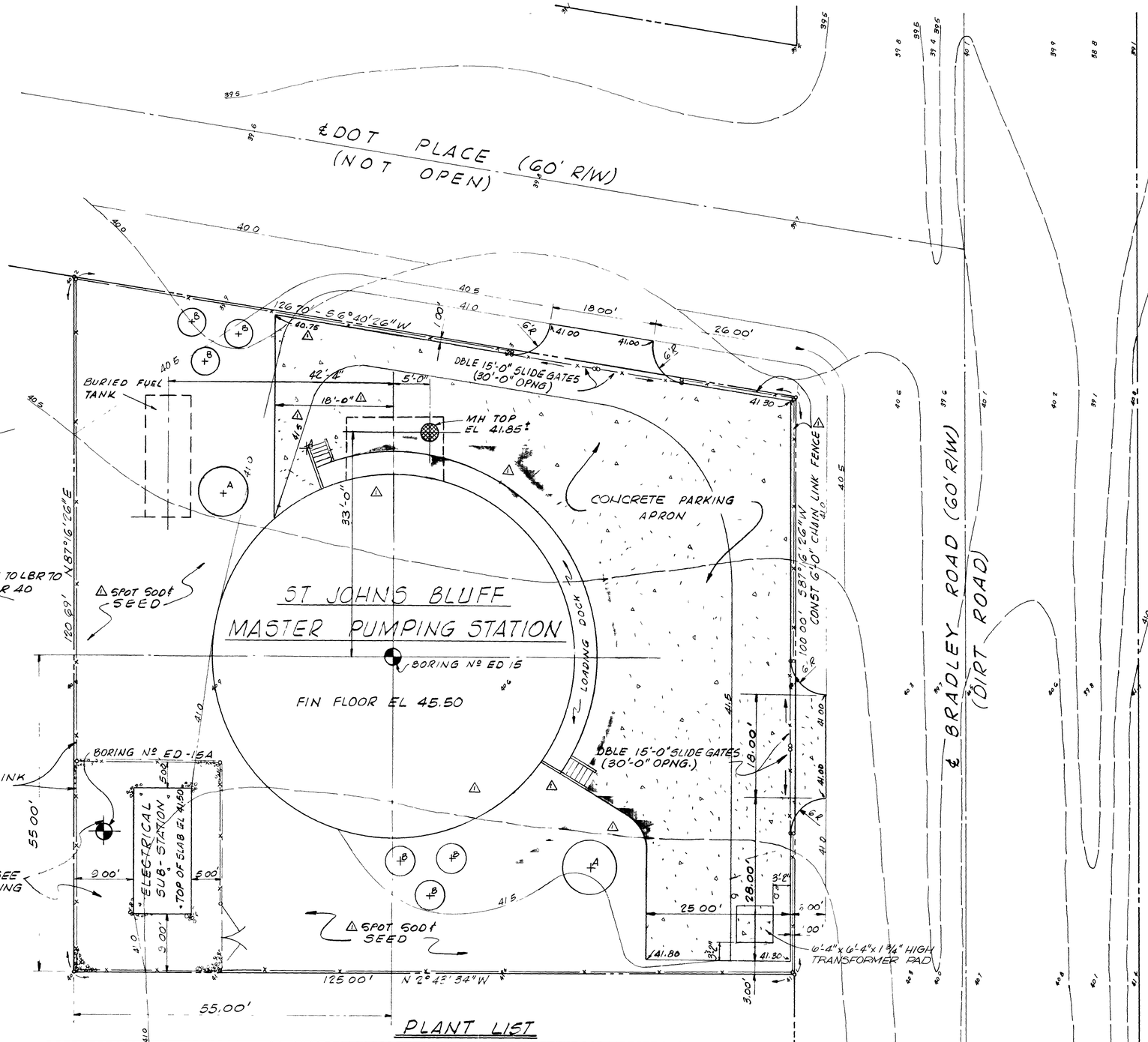

SCALE: 1" = 10'

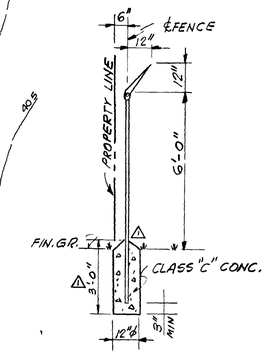

TYP. FENCE SECTION
(SEE SPECS.)

LEGEND

40.5	EXISTING CONTOURS
40.5	NEW CONTOURS
40.9	EXISTING SPOT ELEVATIONS
42.20	NEW SPOT ELEVATIONS
	NEW CONC PAVING
	NEW ASPHALT PAVING

NOTE:

BENCH MARK - R R SPIKE IN POWER POLE 200'± EAST OF SOUTH EAST PUMPING STATION PROPERTY CORNER, ON SOUTH SIDE OF BRADLEY ROAD R/W. ELEV. 41.60 (U.S.C.&G.S. DATUM)

PLANT LIST

TYPE	QUANTITY	KEY	BOTANICAL NAME	COMMON NAME	SIZE	SPACING	REMARKS
TREE	2	A	LAGERSTROMIA INDICA	CRAPE MYRTLE	5 GAL. 6'-8'	AS SHOWN	MULTI STEM
SHRUB	6	B	VIBURNUM RUFIDULUM	VIBURNUM	5 GAL.	AS SHOWN	

AS BUILT
OCT. 1981

G-1

NO	DESCRIPTION	BY	FIRM	DATE	S&P	DATE	PW	DATE
1	PRE-BID REVISIONS	JB	FGA	9/77	S&P	9/75	JHH	3/13/78
	REVISIONS	SUBMITTAL			APPROVAL			

SUBMITTED BY James S. English
REG ENGR FLA NO 6847 DATE 9-76
FLOOD & ASSOCIATES INC

APPROVAL RECOMMENDED BY
REG ENGR FLA NO 14824 DATE 3 28 78
SVERDRUP & PARCEL AND ASSOCIATES INC

APPROVED BY
REG ENGR FLA NO ____ DATE ____
WATER AND SEWER DIVISION
AUTHORIZED BY
REG ENGR FLA NO 14270 DATE 3/31/78
OFFICE OF DIRECTOR OF PUBLIC WORKS
CITY OF JACKSONVILLE FLORIDA

CITY OF JACKSONVILLE, FLORIDA

SEWERAGE IMPROVEMENT PROGRAM

ST JOHNS BLUFF MASTER PUMPING STATION

12897

FLOOD & ASSOCIATES, INC.
DESIGN CONSULTANT

SVERDRUP & PARCEL AND ASSOCIATES, INC — GENERAL CONSULTANT

DETAILED BY J R H | SCALE AS SHOWN | DATE SEPT 1976
CHECKED BY R V T

SITE PLAN

CONTR NO JS-407 | PROJ NO 7316 | SHEET NO 3 OF 42

E&E 18 1253 7-73 MC 1227-

LEGEND

—W—	POTABLE WATER
V.C.	VITRIFIED CLAY PIPE
GV	GATE VALVE
CV	CHECK VALVE
RCP	REINFORCED CONCRETE PIPE
C.I.	CAST IRON
D.I.	DUCTILE IRON
L.R.	LONG RADIUS
M.J.	MECHANICAL JOINT
⋈	GATE VALVE
⋈	CHECK VALVE
⋈	PLUG VALVE
CMP	CORRUGATED METAL PIPE

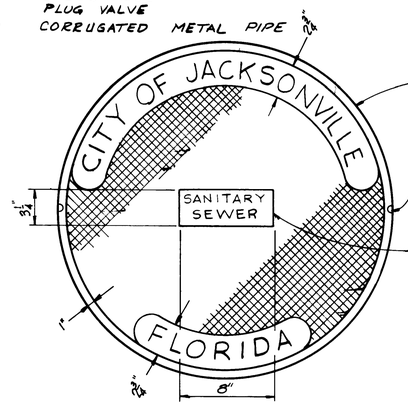

MANHOLE FRAME & COVER CITY OF JACKSONVILLE STANDARD, DATED AUGUST 1975

2" CONCEALED PICKHOLES

RAISED LETTERS 1" HIGH FLUSH W/TOP OF MANHOLE COVER

PLAN OF COVER WT 244#

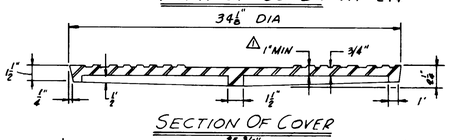

SECTION OF COVER

NOTE: FRAME & COVER MATING SURFACES SHALL BE MACHINE GROUND TO PREVENT ROCKING

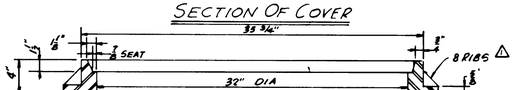

DETAIL STANDARD MANHOLE FRAME COVER WT 215# (M-1 / M-1 B)

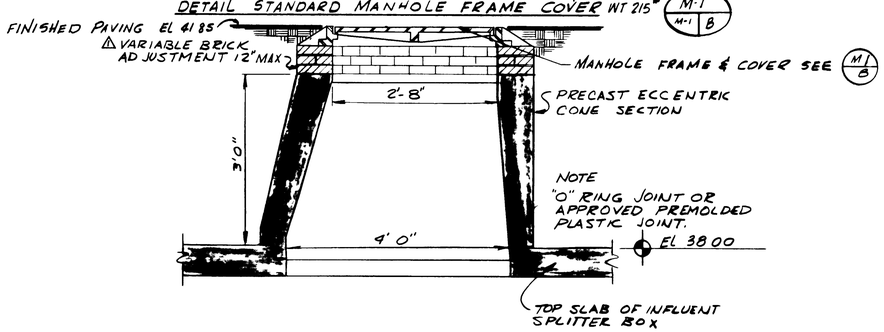

PRECAST MANHOLE CONE SECTION (M-1 / M-2 A)

NOT TO SCALE

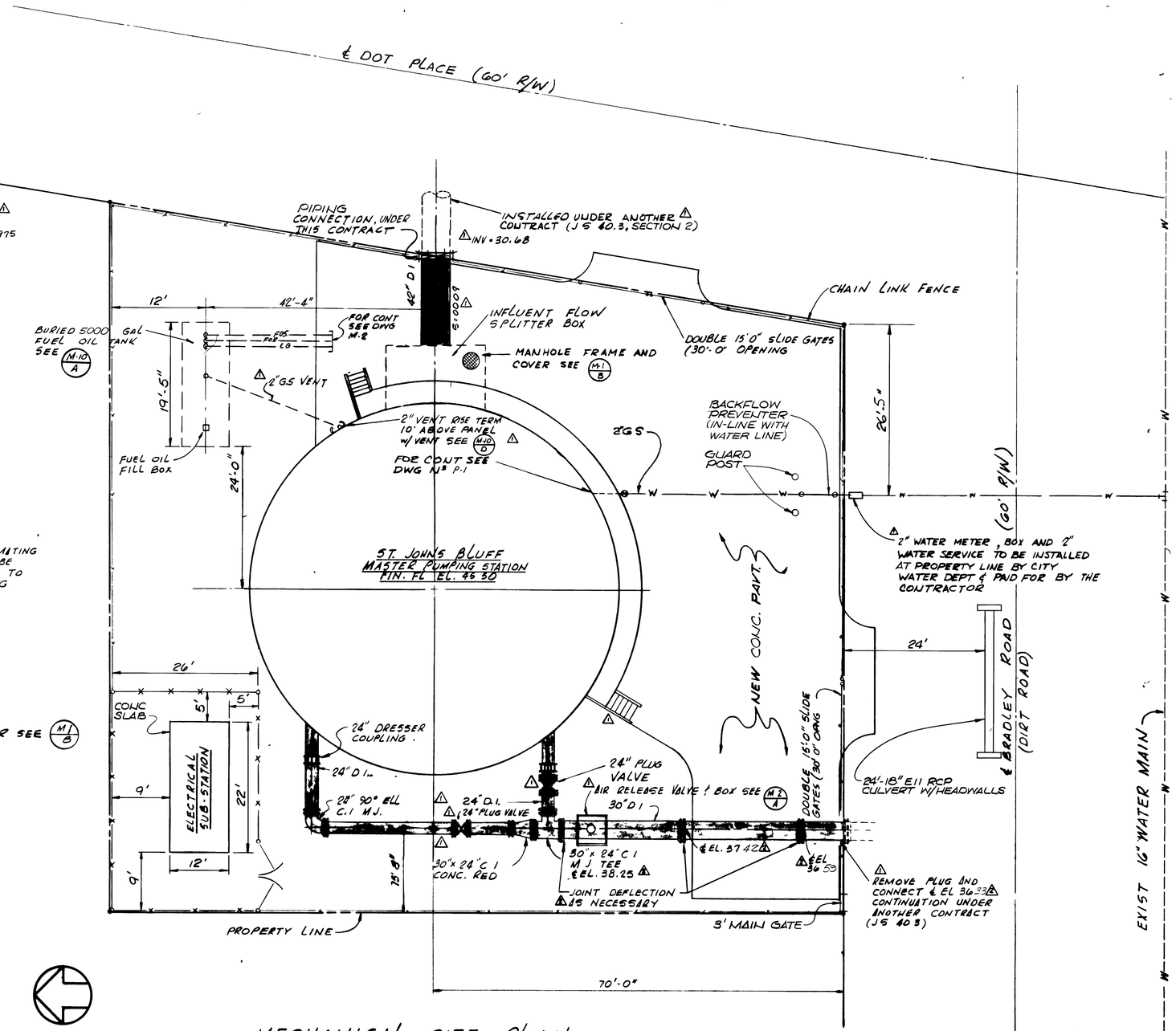

MECHANICAL SITE PLAN

SCALE: 1" = 10'

12898

AS BUILT OCT. 1981

NO	DESCRIPTION	BY	FIRM	DATE	S&P	DATE	PW	DATE
	REVISIONS	SUBMITTAL			APPROVAL			
2	REVISED ℄ ELEVATION	FWS	F&A	9/19				
1	PRE BID REVISION	JB	F&A	9/19				

SUBMITTED BY [signature]
REG ENGR FLA NO 6847 DATE 9/76
FLOOD & ASSOCIATES INC
APPROVAL RECOMMENDED BY [signature]
REG ENGR FLA NO 22 24 DATE 3 28 78
SVERDRUP & PARCEL AND ASSOCIATES INC

APPROVED BY
REG ENGR FLA NO ____ DATE ____
WATER AND SEWER DIVISION
AUTHORIZED BY [signature]
REG ENGR FLA NO 4776 DATE 3-7-78
OFFICE OF DIRECTOR OF PUBLIC WORKS
CITY OF JACKSONVILLE FLORIDA

CITY OF JACKSONVILLE, FLORIDA

SEWERAGE IMPROVEMENT PROGRAM
ST JOHNS BLUFF
MASTER PUMPING STATION

FLOOD & ASSOCIATES, INC.
DESIGN CONSULTANT
SVERDRUP & PARCEL AND ASSOCIATES, INC — GENERAL CONSULTANT

DETAILED BY SBD
CHECKED BY DAB
SCALE SHOWN
DATE SEPT 1976

MECHANICAL SITE PLAN

CONTR NO JS-40 7 | PROJ NO 7816 | SHEET NO 4 OF 42

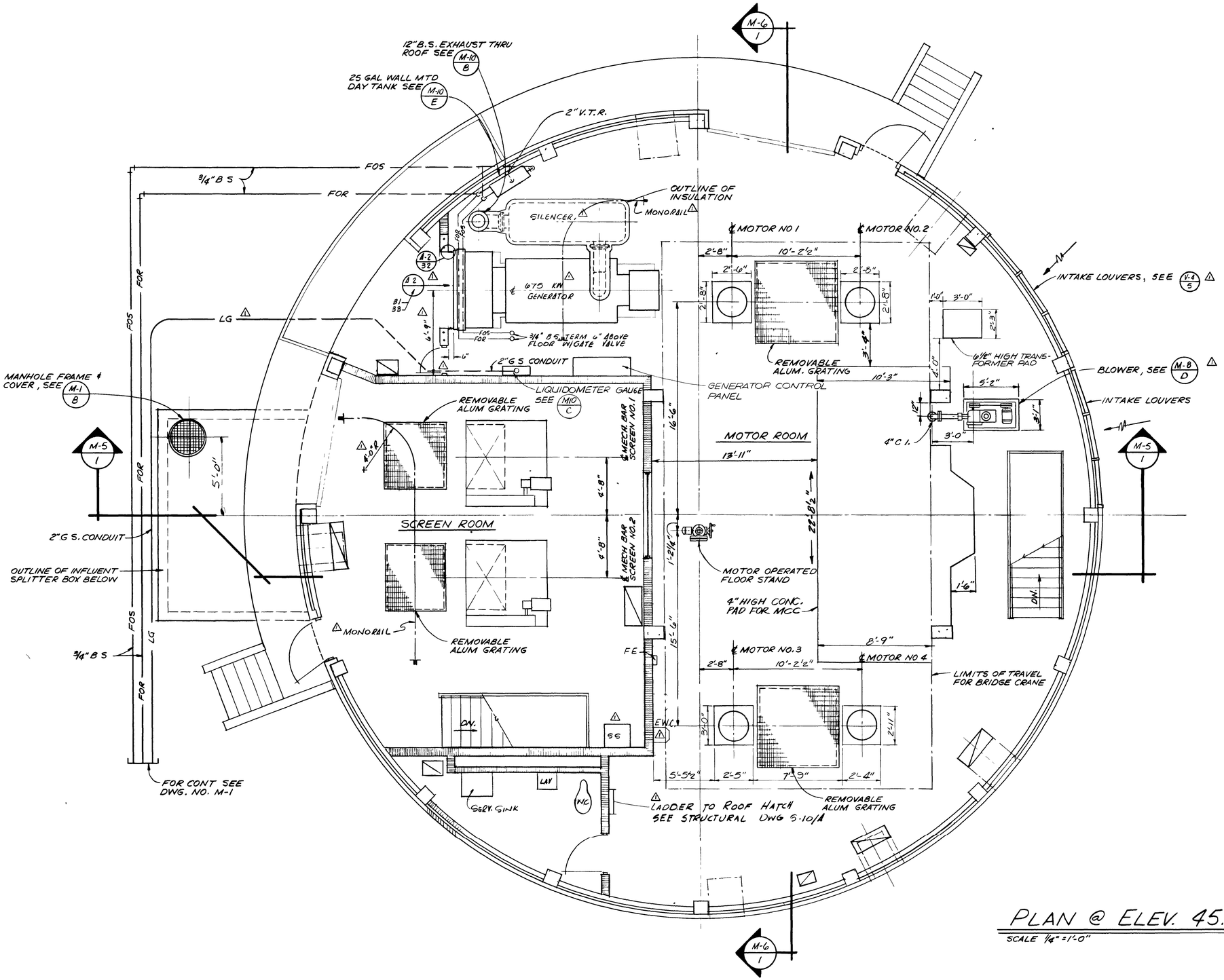

PLAN @ ELEV. 45.50

SCALE 1/4" = 1'-0"

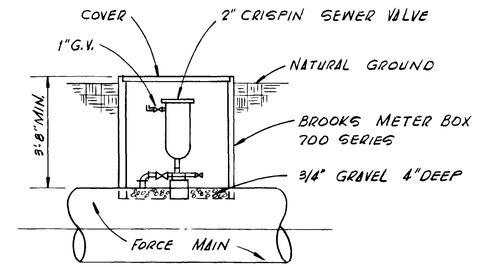

△ DETAIL - TYPICAL AIR RELEASE VALVE

N.T.S.

M-2 / M-1 △

12899

AS BUILT
OCT, 1981

M-2

NO	DESCRIPTION	BY	FSA	DATE	S&P	DATE	PW	DATE
△	PRE BID REVISION	JB	FSA	9/77	SP	3/78	J.H.H.	3/6/78
	REVISIONS	SUBMITTAL			APPROVAL			

SUBMITTED BY
REG ENGR FLA NO 6847 DATE 9/76
FLOOD & ASSOCIATES INC

APPROVAL RECOMMENDED BY
REG ENGR FLA NO 14324 DATE 3-28-78
SVERDRUP & PARCEL AND ASSOCIATES, INC

APPROVED BY
REG ENGR FLA NO DATE
WATER AND SEWER DIVISION
AUTHORIZED BY
REG ENGR FLA NO 9770 DATE 3-6-78
OFFICE OF DIRECTOR OF PUBLIC WORKS
CITY OF JACKSONVILLE FLORIDA

CITY OF JACKSONVILLE, FLORIDA

SEWERAGE IMPROVEMENT PROGRAM
ST JOHNS BLUFF
MASTER PUMPING STATION

FLOOD & ASSOCIATES, INC.
DESIGN CONSULTANT

SVERDRUP & PARCEL AND ASSOCIATES, INC — GENERAL CONSULTANT

DETAILED BY JWD SCALE AS SHOWN DATE SEPT 1976
CHECKED BY BAB

PLAN AT ELEV 45.50

CONTR NO JS 407 PROJ NO 7316 SHEET NO 5 OF 42

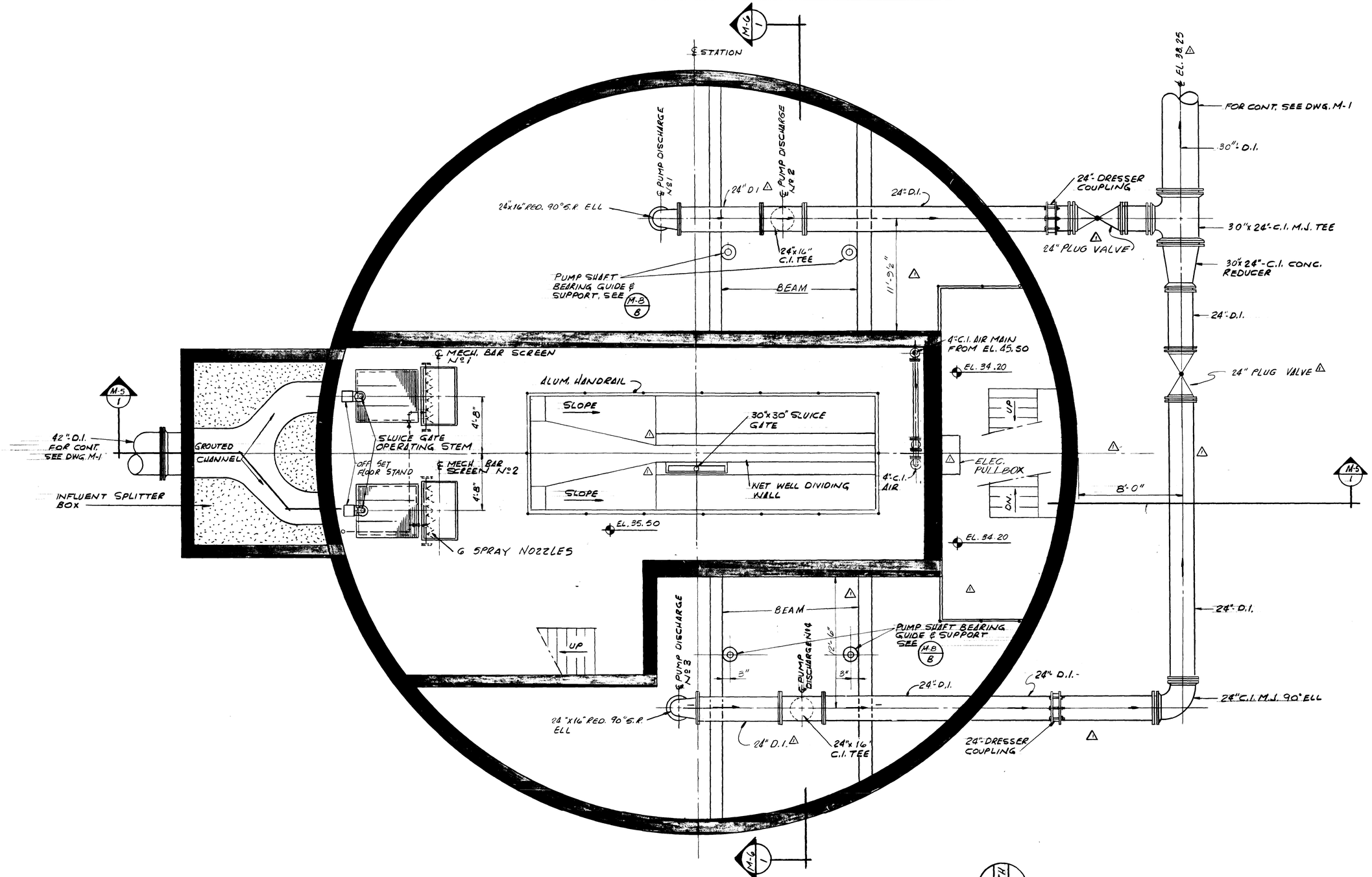

PLAN @ ELEV. 35.50

SCALE: 1/4" = 1'-0"

12900

N

AS BUILT
OCT. 1981

M-3

NO.	DESCRIPTION	BY	FFA	DATE	S&P	DATE	PW	DATE
1	PRE BID REVISION	JB	FFA	9/77		2/78	JHH	3/13/78
	REVISIONS	SUBMITTAL			APPROVAL			

SUBMITTED BY: James S. Engelhardt
REG. ENGR. FLA. NO. 6847 DATE 9-76
FLOOD & ASSOCIATES, INC.

APPROVAL RECOMMENDED BY: George E. Johns
REG. ENGR. FLA. NO. 14224 DATE 2-28-78
SVERDRUP & PARCEL AND ASSOCIATES, INC.

APPROVED BY: _____
REG. ENGR. FLA. NO. _____ DATE _____
WATER AND SEWER DIVISION

AUTHORIZED BY: Joe M. Lott
REG. ENGR. FLA. NO. 4270 DATE 3-13-78
OFFICE OF DIRECTOR OF PUBLIC WORKS
CITY OF JACKSONVILLE, FLORIDA

CITY OF JACKSONVILLE, FLORIDA

SEWERAGE IMPROVEMENT PROGRAM
ST. JOHNS BLUFF
MASTER PUMPING STATION

FLOOD & ASSOCIATES, INC.
DESIGN CONSULTANT

SVERDRUP & PARCEL AND ASSOCIATES, INc. — GENERAL CONSULTANT

DETAILED BY: C.D. | SCALE: SHOWN | DATE: SEPT. 1976
CHECKED BY: BAB

PLAN AT ELEV. 35.50

CONTR. NO. JS-40.7 | PROJ. NO. 7316 | SHEET NO. 6 OF 42

A.R. COGSWELL CO., JACKSONVILLE, FLORIDA N14419

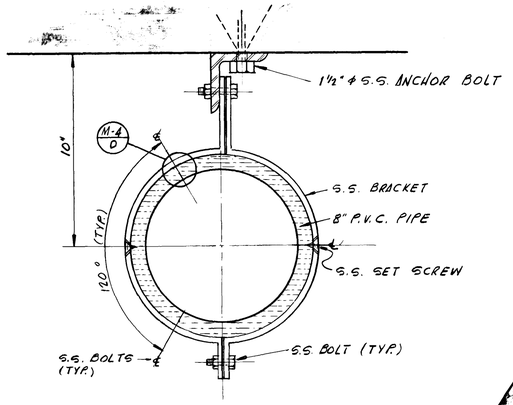

DETAIL M-4 / C
SCALE: 3" = 1'-0"

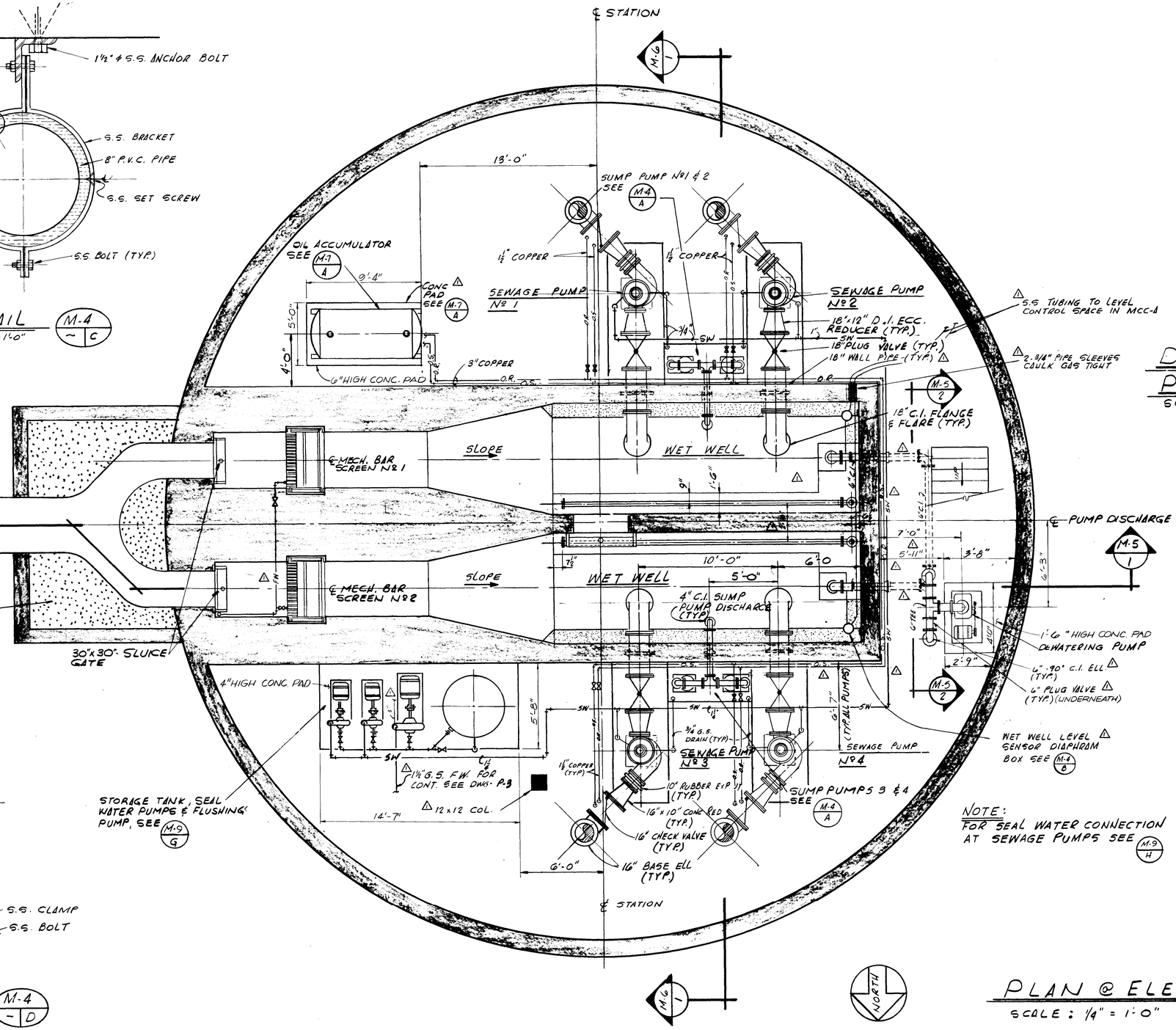

NOTE:
FOR SEAL WATER CONNECTION AT SEWAGE PUMPS SEE M-9 / H

PLAN @ ELEV. 22.89
SCALE: 1/4" = 1'-0"

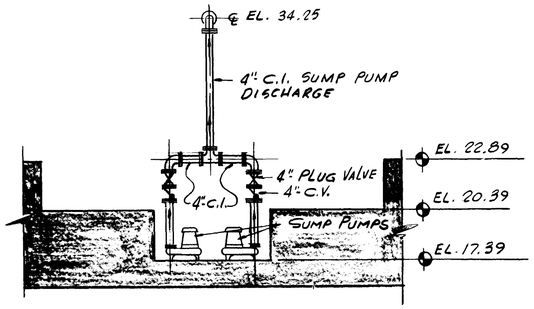

DETAIL PIPING @ SUMP PUMPS M-4 / M-4 A
SCALE 1/4" = 1'-0"

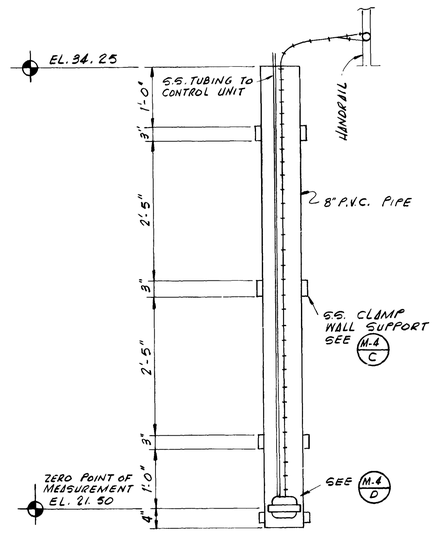

DETAIL M-4 / B
SCALE: 3/4" = 1'-0"

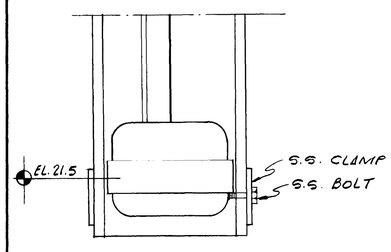

DETAIL M-4 / D
N.T.S.

12901

AS BUILT
OCT. 1981

M-4

NO.	DESCRIPTION	BY	FRM	DATE	S&P	DATE	PW	DATE
1	PRE BID REVISION	JB	F&A	9/77	[illegible]	9/77	[illegible]	8/30/78
	REVISIONS	SUBMITTAL			APPROVAL			

SUBMITTED BY [signature]
REG. ENGR. FLA. NO. 6847 DATE 9-76
FLOOD & ASSOCIATES, INC.
APPROVAL RECOMMENDED BY [signature]
REG. ENGR. FLA. NO. 14824 DATE 3-28-78
SVERDRUP & PARCEL AND ASSOCIATES, INC

APPROVED BY
REG. ENGR. FLA. NO. ____ DATE ____
WATER AND SEWER DIVISION
AUTHORIZED BY [signature]
REG. ENGR. FLA. NO. 22 DATE 8/30/78
OFFICE OF DIRECTOR OF PUBLIC WORKS
CITY OF JACKSONVILLE, FLORIDA

CITY OF JACKSONVILLE, FLORIDA
SEWERAGE IMPROVEMENT PROGRAM
ST. JOHNS BLUFF
MASTER PUMPING STATION

FLOOD & ASSOCIATES, INC.
DESIGN CONSULTANT
SVERDRUP & PARCEL AND ASSOCIATES, Inc. — GENERAL CONSULTANT
DETAILED BY: CD
CHECKED BY: BAB
SCALE: SHOWN
DATE: SEPT. 1976

PLAN AT ELEV. 22.89

CONTR. NO. JS-40.7 PROJ. NO. 7316 SHEET NO. 7 OF 42

A.R. COGSWELL CO., JACKSONVILLE, FLORIDA

K&E 19 1253 1-76 MC 4465-

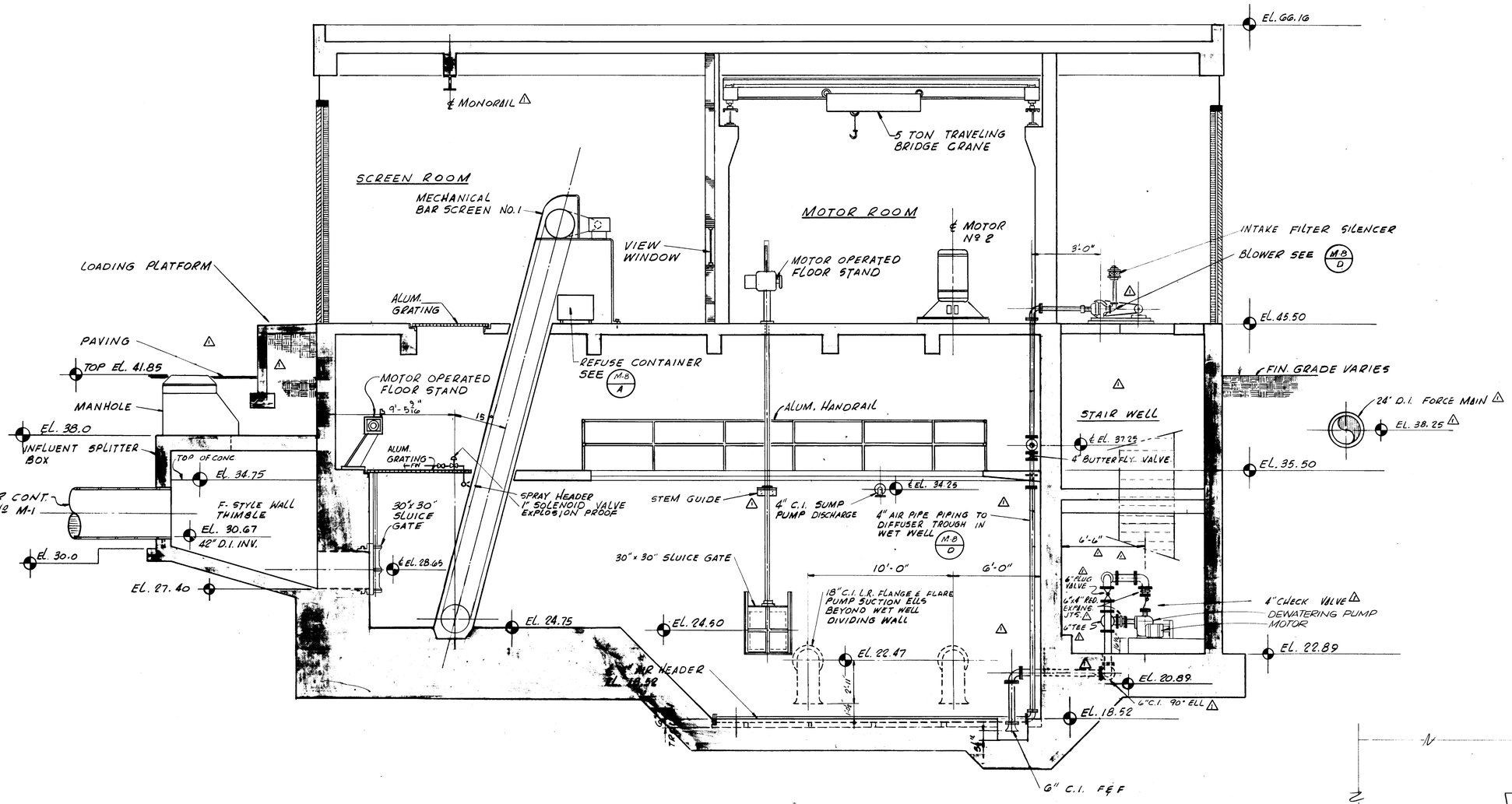

SECTION

SCALE: 1/4" = 1'-0"

M-5 / M-2 | 1

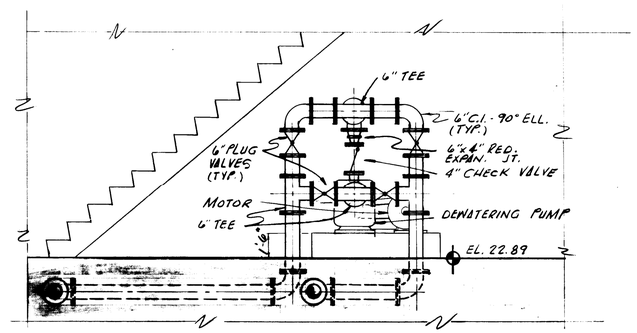

AS BUILT 12902
OCT. 1981

SECTION
SCALE: 3/8" = 1'-0"

M-5 / M-4 | 2

M-5

NO.	DESCRIPTION	BY	FIRM	DATE	S&P	DATE	PW	DATE
1	PRE BID REVISION	JB	FLA	9/77	[illegible]	3/78	[illegible]	3/8/78
	REVISIONS	SUBMITTAL			APPROVAL			

SUBMITTED BY: [signature]
REG. ENGR. FLA. NO. 6847 DATE 9-76
FLOOD & ASSOCIATES, INC.
APPROVAL RECOMMENDED BY: [signature]
REG. ENGR. FLA. NO. 17829 DATE 9-28-78
SVERDRUP & PARCEL AND ASSOCIATES, Inc.

APPROVED BY:
REG. ENGR. FLA. NO. ____ DATE ____
WATER AND SEWER DIVISION
AUTHORIZED BY: [signature]
REG. ENGR. FLA. NO. 14277 DATE 3-6-78
OFFICE OF DIRECTOR OF PUBLIC WORKS
CITY OF JACKSONVILLE, FLORIDA

CITY OF JACKSONVILLE, FLORIDA
SEWERAGE IMPROVEMENT PROGRAM
ST. JOHNS BLUFF
MASTER PUMPING STATION

FLOOD & ASSOCIATES, INC.
DESIGN CONSULTANT
SVERDRUP & PARCEL AND ASSOCIATES, Inc. — GENERAL CONSULTANT
DETAILED BY: CD
CHECKED BY: BAB
SCALE SHOWN
DATE SEPT. 1976

LONGITUDINAL SECTION

CONTR. NO. JS-40.7 | PROJ. NO. 7316 | SHEET NO. 8 OF 42

K&E 19 1253 1-76 MC 4465-

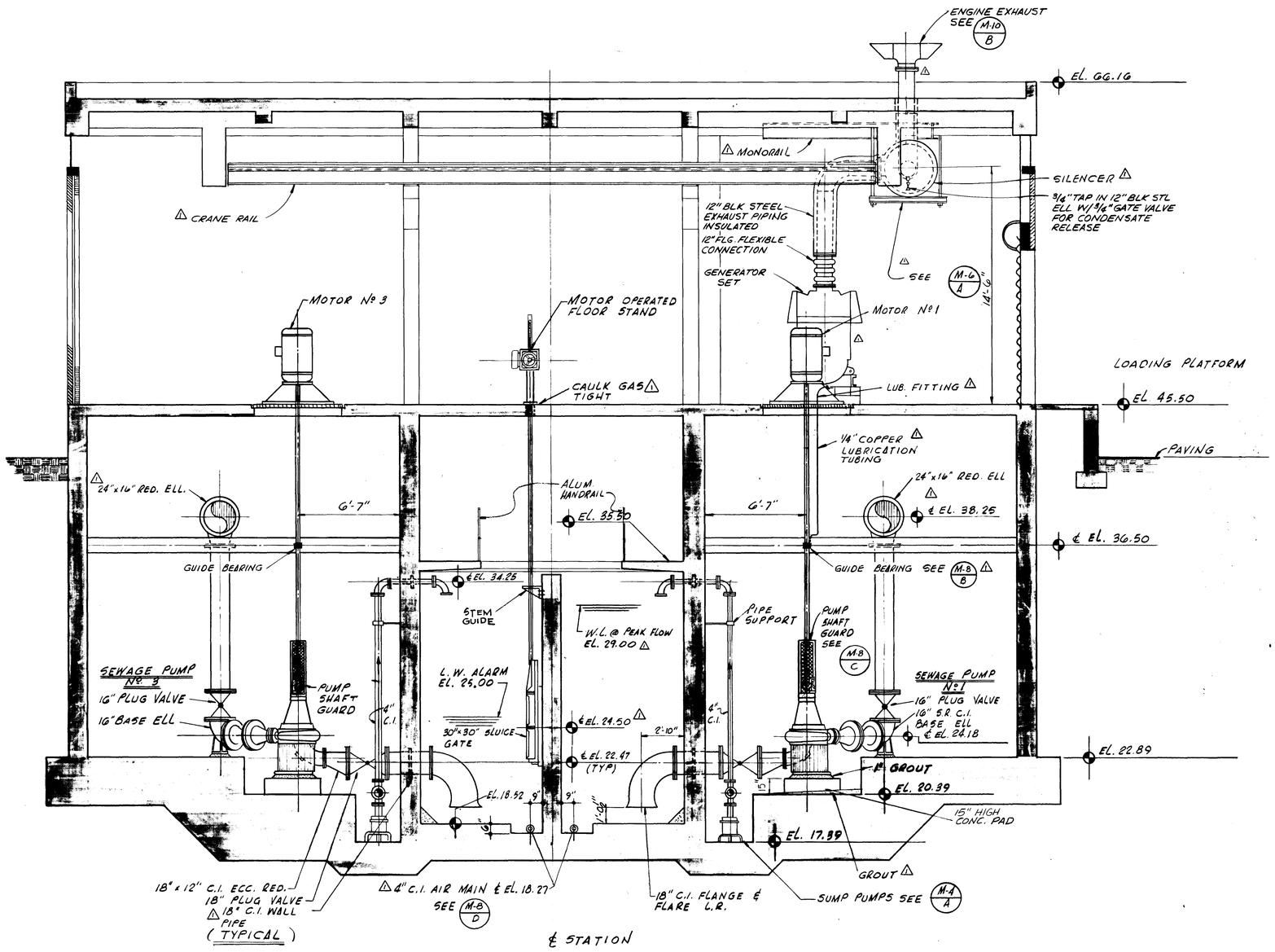

SECTION

M-6 / 1

SCALE 1/4" = 1'-0"

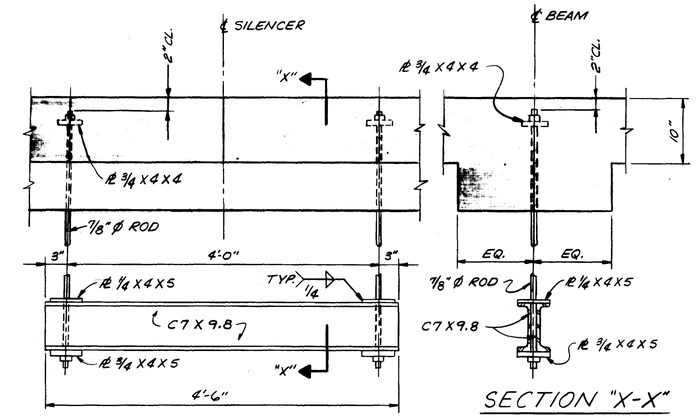

SECTION "X-X"

SILENCER SUPPORT DETAIL

M-6 / A

N.T.S.

△ TWO REQUIRED - SPACED TO SUPPORT 1/3 POINTS OF THE EQUIPMENT SUPPLIED.

12903 N

AS BUILT
OCT, 1981

M-6

NO.	DESCRIPTION	BY	FIRM	DATE	S&P	DATE	PW	DATE
△	PRE BID REVISION	JB	F&A	9/77	[illegible]	3/78	JHH	3/17/78
	REVISIONS	SUBMITTAL			APPROVAL			

SUBMITTED BY: [signature] REG. ENGR. FLA. NO. 6847 DATE 9-76
FLOOD & ASSOCIATES, INC.
APPROVAL RECOMMENDED BY: [signature] REG. ENGR. FLA. NO. 14624 DATE 3-28-78
SVERDRUP & PARCEL AND ASSOCIATES, Inc.

APPROVED BY: REG. ENGR. FLA. NO. DATE
WATER AND SEWER DIVISION
AUTHORIZED BY: [signature] REG. ENGR. FLA. NO. 9270 DATE 3/28/78
OFFICE OF DIRECTOR OF PUBLIC WORKS
CITY OF JACKSONVILLE, FLORIDA

CITY OF JACKSONVILLE, FLORIDA
SEWERAGE IMPROVEMENT PROGRAM
ST. JOHNS BLUFF
MASTER PUMPING STATION

FLOOD & ASSOCIATES, INC.
DESIGN CONSULTANT
SVERDRUP & PARCEL AND ASSOCIATES, Inc. — GENERAL CONSULTANT
DETAILED BY: CD SCALE SHOWN DATE SEPT 1976
CHECKED BY: BAB

TRANSVERSE SECTION

CONTR. NO. JS-40.7 PROJ. NO. 7316 SHEET NO. 9 OF 42

K&E 10 1253 7-73 MC 1227-

NOTE: See Shop Drawing 15 Ø

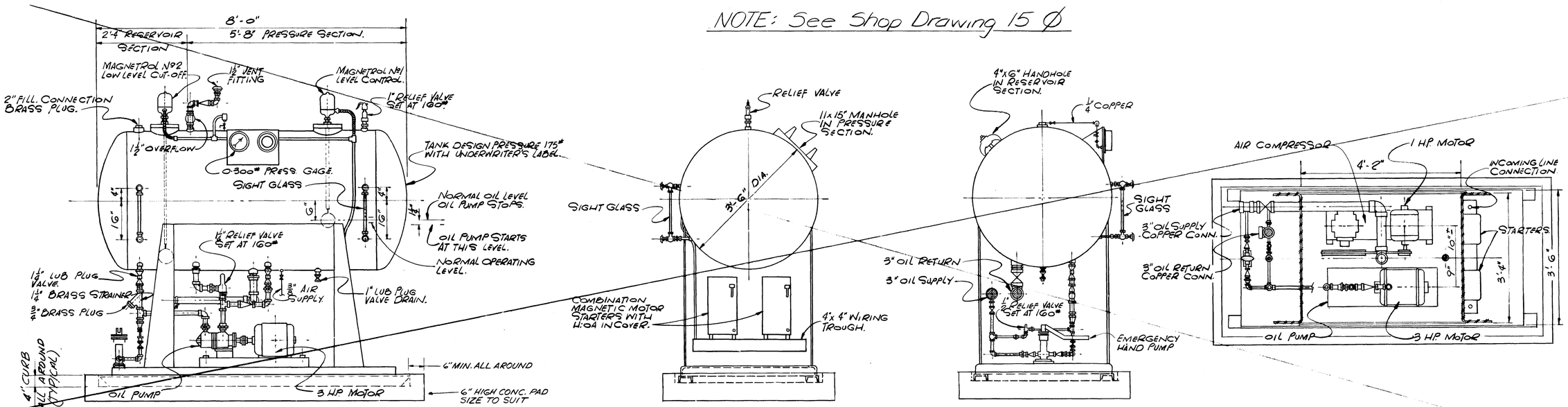

DETAIL OIL ACCUMULATOR

M-7 / M-4 A

SCALE: ¾" = 1'-0"

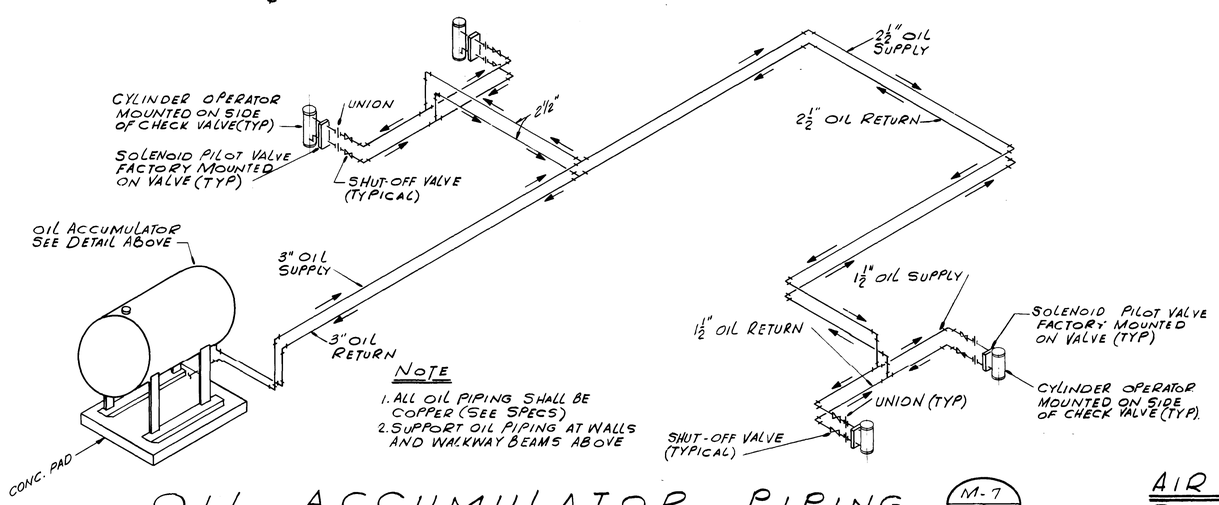

NOTE

1. ALL OIL PIPING SHALL BE COPPER (SEE SPECS)
2. SUPPORT OIL PIPING AT WALLS AND WALKWAY BEAMS ABOVE

OIL ACCUMULATOR PIPING SCHEMATIC

M-7 / M-7 B

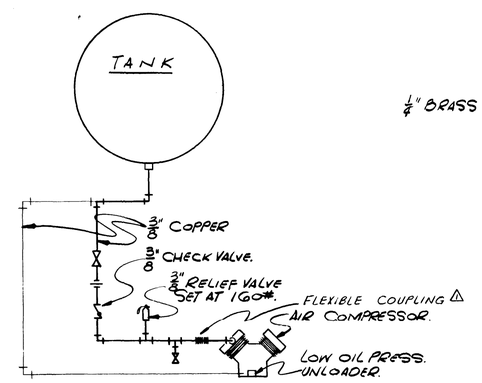

AIR COMPRESSOR PIPING SCHEMATIC

NOT TO SCALE:

M-7 / M-7 C

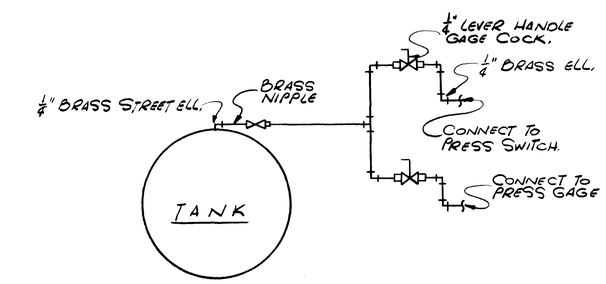

GAGE PIPING SCHEMATIC

NOT TO SCALE:

M-7 / M-7 D

12904 N

AS BUILT
OCT. 1981

M-7

NO.	DESCRIPTION	BY	FRM	DATE	S&P	DATE	PW	DATE
△	PRE-BID REVISIONS	JB	FEA	9/77	[illegible]	2/78	[illegible]	2/2/78
	REVISIONS	SUBMITTAL			APPROVAL			

SUBMITTED BY [signature]
REG. ENGR. FLA. NO. 6847 DATE 9/76
FLOOD & ASSOCIATES INC.
APPROVAL RECOMMENDED BY [signature]
REG. ENGR. FLA. NO. 14824 DATE 3-28-78
SVERDRUP & PARCEL AND ASSOCIATES, Inc

APPROVED BY:
REG. ENGR. FLA. NO. ____ DATE ____
WATER AND SEWER DIVISION
AUTHORIZED BY [signature]
REG. ENGR. FLA. NO. 9270 DATE 3/2/78
OFFICE OF DIRECTOR OF PUBLIC WORKS
CITY OF JACKSONVILLE, FLORIDA

CITY OF JACKSONVILLE, FLORIDA
SEWERAGE IMPROVEMENT PROGRAM
ST. JOHNS BLUFF
MASTER PUMPING STATION

FLOOD & ASSOCIATES, INC.
DESIGN CONSULTANT
SVERDRUP & PARCEL AND ASSOCIATES, Inc. — GENERAL CONSULTANT
DETAILED BY: C.D. SCALE AS SHOWN DATE SEPT. 1976
CHECKED BY B.A.B.

OIL ACCUMULATOR DETAILS

CONTR. NO. JS 40.7 PROJ. NO. 7316 SHEET NO. 10 OF 42

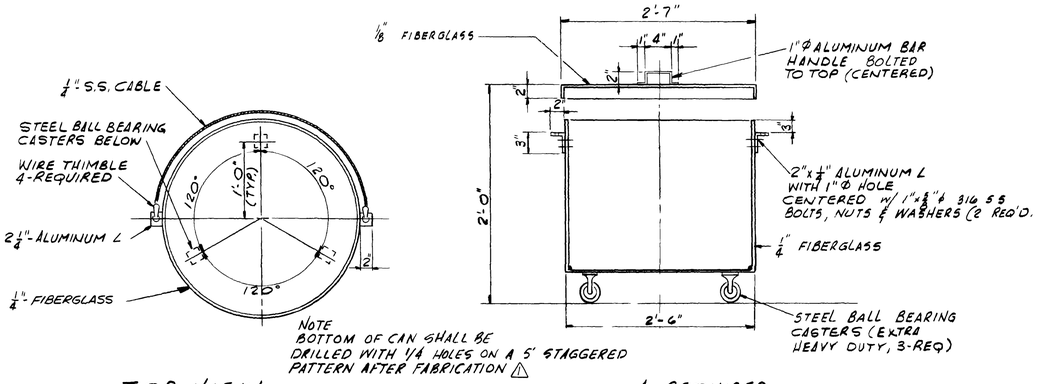

TOP VIEW
(WITHOUT COVER)

4-REQUIRED

DETAIL REFUSE CONTAINER

M-8 / M-5 A

SCALE : 1" = 1'-0" (4-REQUIRED)

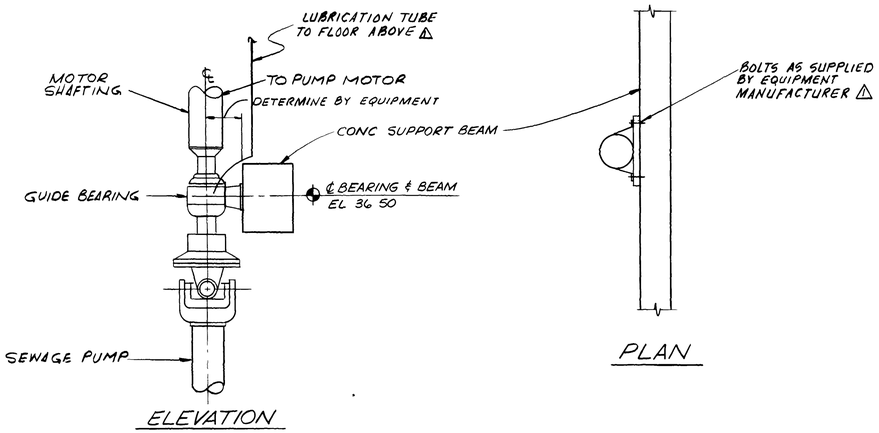

ELEVATION

PLAN

DETAIL PILLOW BLOCK BEARING SUPPORT

M-8 / M-3 B

NOT TO SCALE

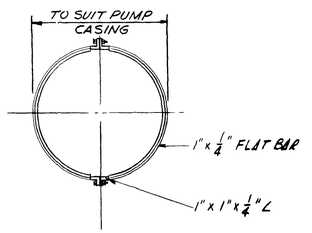

PLAN

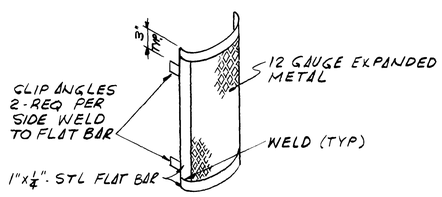

NOTE
AFTER FABRICATION, SHAFT GUARD SHALL BE HOT DIPPED GALVANIZED

DETAIL HANDHOLE

NOT TO SCALE

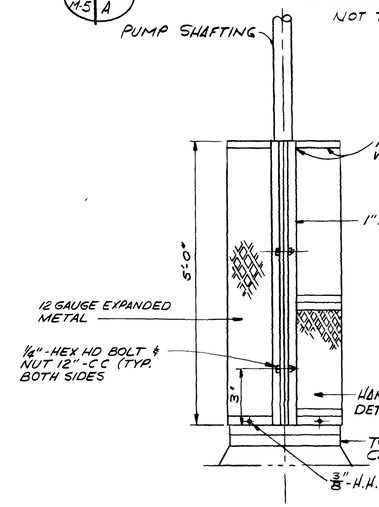

SHAFT GUARD @ PUMP

NOT TO SCALE

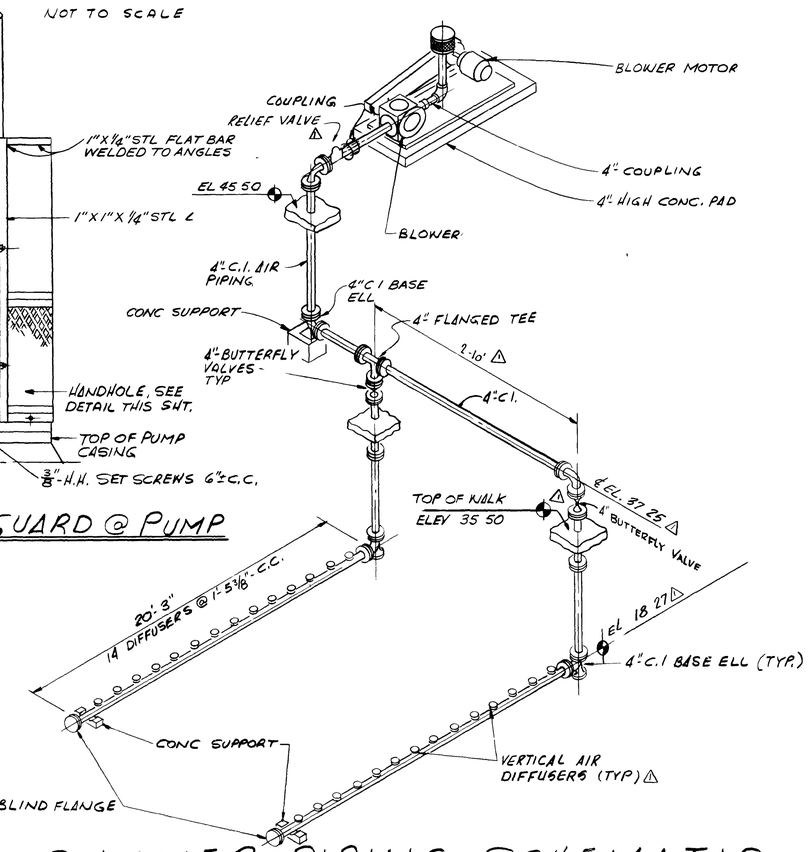

AS BUILT
OCT 1981

DETAIL PUMP SHAFT GUARD

M-8 / M-6 C

NOT TO SCALE

BLOWER PIPING SCHEMATIC

M-8 / M-2 D

NOT TO SCALE

12905

M-8

NO	DESCRIPTION	BY	FHA	DATE	S&P	DATE	PW	DATE
△	PRE BID REVISION	JB	FHA	9/77	S&P	3/78	JHH	3b.h
	REVISIONS	SUBMITTAL			APPROVAL			

SUBMITTED BY: [signature]
REG ENGR FLA NO 6847 DATE 9/76
FLOOD & ASSOCIATES INC

APPROVAL RECOMMENDED BY: [signature]
REG ENGR FLA NO 14824 DATE 3-28-78
SVERDRUP & PARCEL AND ASSOCIATES INC

APPROVED BY
REG ENGR FLA NO DATE
WATER AND SEWER DIVISION

AUTHORIZED BY: [signature] 3/31/78
REG ENGR FLA NO DATE
OFFICE OF DIRECTOR OF PUBLIC WORKS
CITY OF JACKSONVILLE FLORIDA

CITY OF JACKSONVILLE, FLORIDA
SEWERAGE IMPROVEMENT PROGRAM
ST JOHNS BLUFF
MASTER PUMPING STATION

FLOOD & ASSOCIATES, INC.
DESIGN CONSULTANT
SVERDRUP & PARCEL AND ASSOCIATES, INC -- GENERAL CONSULTANT

DETAILED BY SBD SCALE AS SHOWN DATE SEPT 1976
CHECKED BY BAB

MISCELLANEOUS DETAILS

CONTR NO JS 407 PROJ NO 7316 SHEET NO 11 OF 42

A R COGSWELL CO JACKSONVILLE, FLORIDA N14419

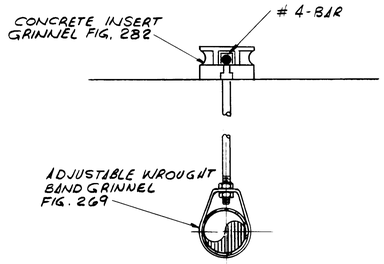

ROD LOAD - TABLE "A"	
ROD SIZE	MAX. LOAD LBS
3/8"	610
1/2"	1130
5/8"	1810
3/4"	2710
7/8"	3770
1"	4760
1 1/8" △	6230
1 1/4"	8000
1 1/2"	11630

TYPICAL PIPE HANGER FOR 3/4" TO 8"-PIPE DETAIL

M-9 / - A

NOT TO SCALE

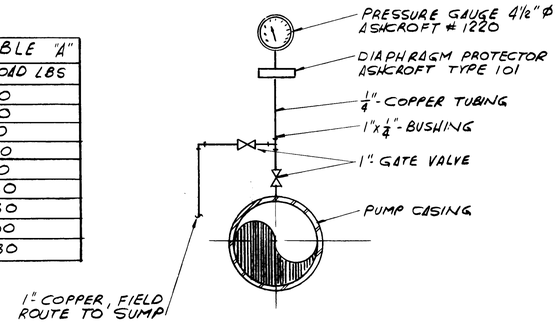

TYPICAL PRESSURE GAUGE DETAIL

M-9 / - B

NOT TO SCALE

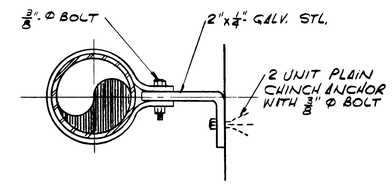

TYPICAL PIPE STAND-OFF DETAIL

M-9 / - C

NOT TO SCALE

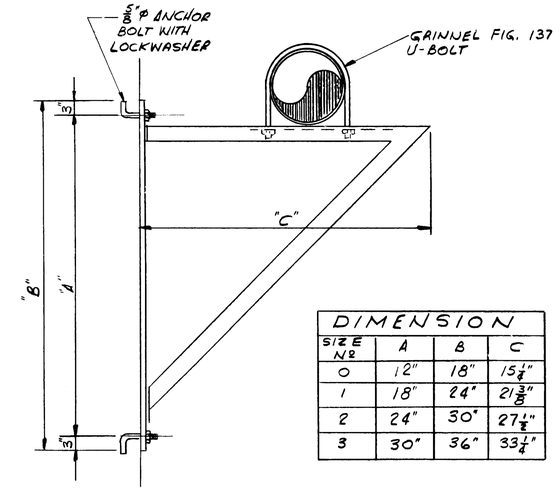

DIMENSION			
SIZE Nº	A	B	C
0	12"	18"	15 1/4"
1	18"	24"	21 3/8"
2	24"	30"	27 1/2"
3	30"	36"	33 1/4"

DETAIL TYPICAL WALL & PIPE BRACKET

M-9 / - D

NOT TO SCALE

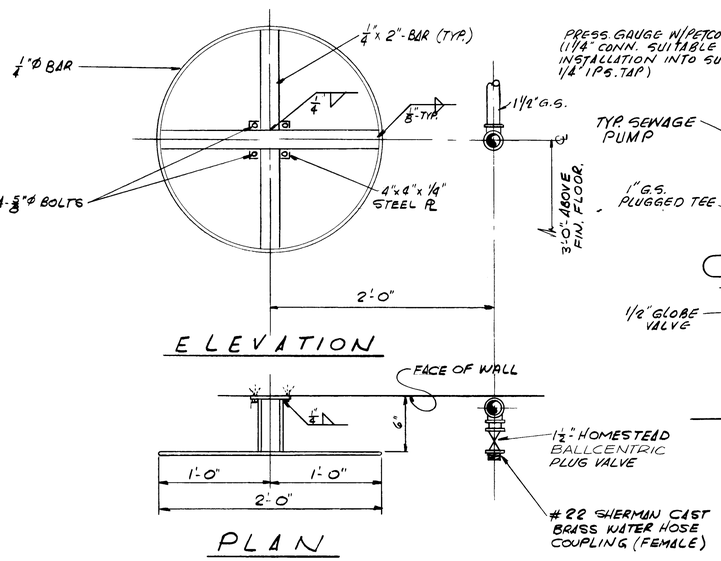

HOSE STATION & REEL DETAIL

M-9 / P-3 E

SCALE: 1 1/2" = 1'-0"

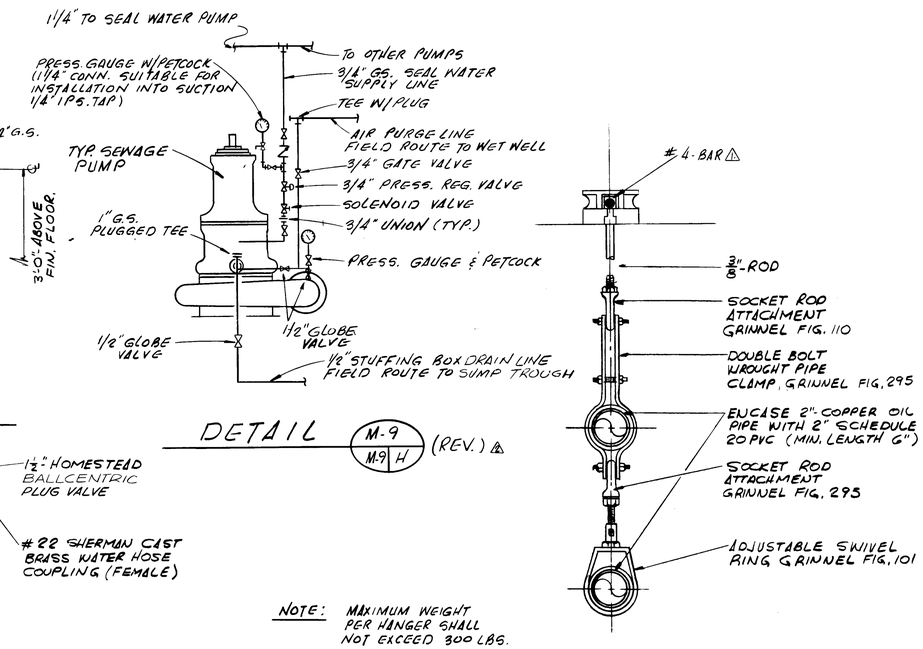

DETAIL

M-9 / M-9 H (REV.) △

NOTE: MAXIMUM WEIGHT PER HANGER SHALL NOT EXCEED 300 LBS.

DETAIL TYPICAL OIL PIPING HANGER

M-9 / - F

NOT TO SCALE

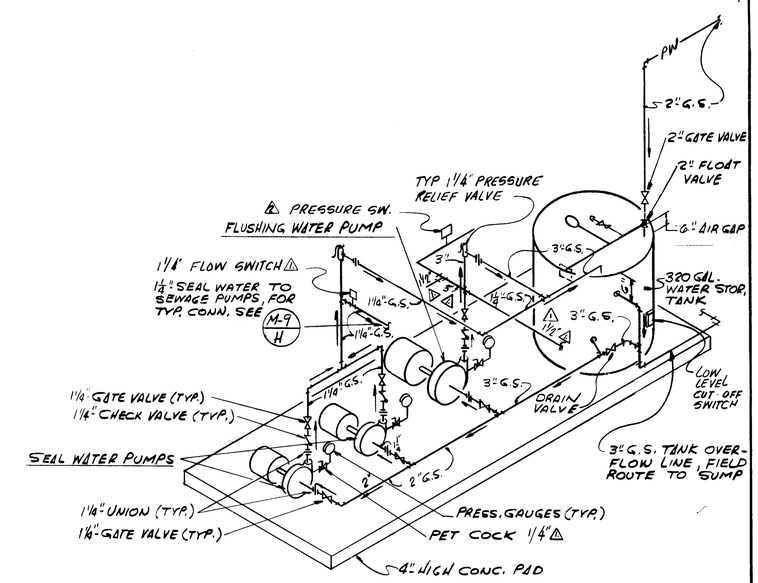

SEAL & FLUSHING WATER PUMPS PIPING SCHEMATIC

M-9 / M-4 G

NOT TO SCALE

12906 N

AS BUILT

OCT. 1981

M-9

NO.	DESCRIPTION	BY	FIRM	DATE	S&P	DATE	PW	DATE
	REVISIONS	SUBMITTAL			APPROVAL			
△	ADDENDUM Nº 1	DL	F.A	5/18	[illegible]	5/72	WBS	6/76
△	PRE BID REVISION	JB	F&A	9/77	[illegible]	3/78	J.H.H	3/1/78

SUBMITTED BY: [signature]
REG. ENGR. FLA. NO. 6847 DATE 9/76
FLOOD & ASSOCIATES, INC.

APPROVAL RECOMMENDED BY: [signature]
REG. ENGR. FLA. NO. 14824 DATE 3-28-78
SVERDRUP & PARCEL AND ASSOCIATES, Inc

APPROVED BY: _____
REG. ENGR. FLA. NO. _____ DATE _____
WATER AND SEWER DIVISION

AUTHORIZED BY: [signature]
REG. ENGR. FLA. NO. 9270 DATE 3/1/78
OFFICE OF DIRECTOR OF PUBLIC WORKS
CITY OF JACKSONVILLE, FLORIDA

CITY OF JACKSONVILLE, FLORIDA
SEWERAGE IMPROVEMENT PROGRAM
ST. JOHNS BLUFF
MASTER PUMPING STATION

FLOOD & ASSOCIATES, INC.
DESIGN CONSULTANT
SVERDRUP & PARCEL AND ASSOCIATES, Inc. — GENERAL CONSULTANT

DETAILED BY: S.B.D. SCALE AS SHOWN DATE SEPT. 1976
CHECKED BY: B.A.B.

MISCELLANEOUS DETAILS

CONTR. NO. JS 40.7 PROJ. NO. 7316 SHEET NO. 12 OF 42

A.R. COGSWELL CO., JACKSONVILLE, FLORIDA N14419

K&E 19 1253 1 76 MC 4465-

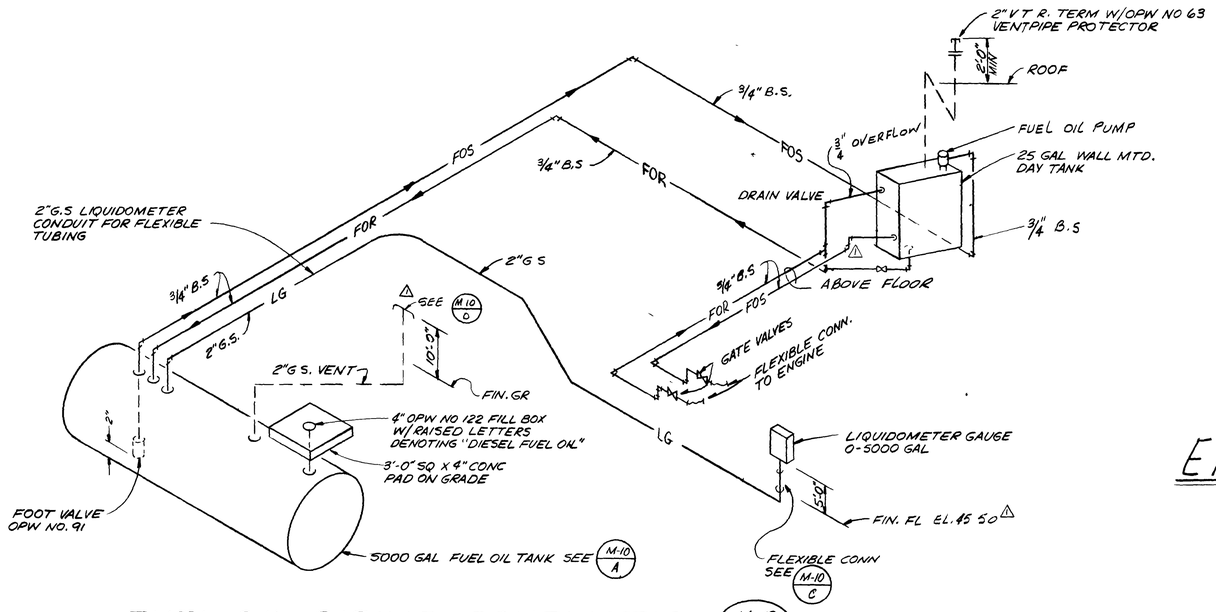

FUEL OIL PIPING SCHEMATIC

N.T.S

M-10 / E

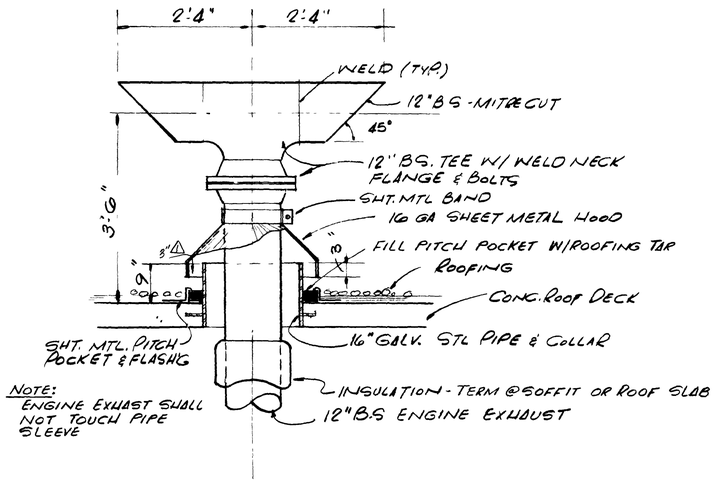

ENGINE ROOF EXHAUST DETAIL

SCALE: 3/4" = 1'-0"

M-10 / M-2 B

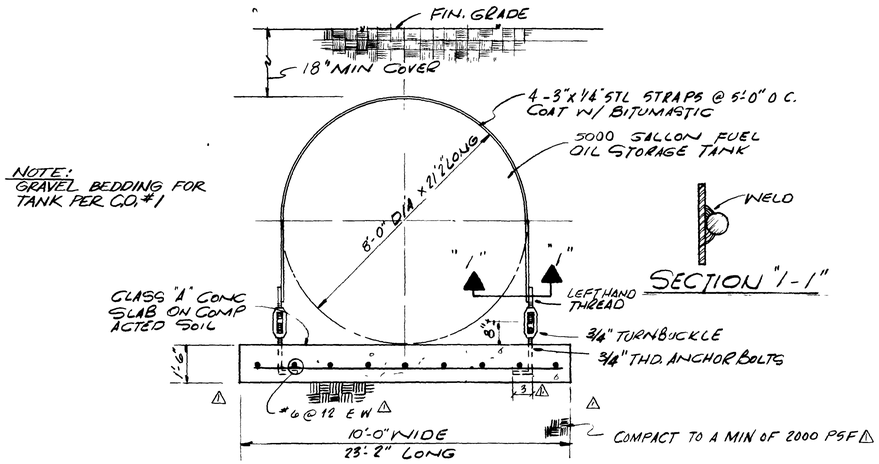

FUEL OIL TANK FOUNDATION DETAIL

N.TS

M-10 / M-10 A

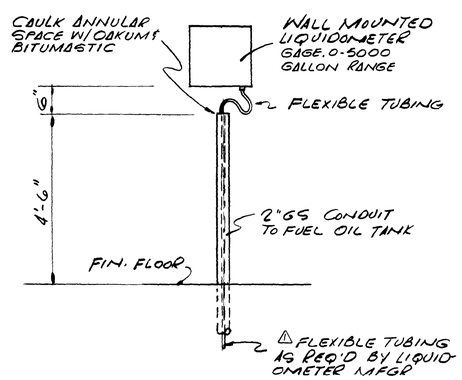

DETAIL

SCALE: 3/4" = 1'-0"

M-10 / M-10 C

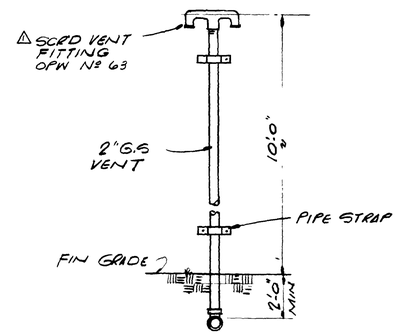

DETAIL

N.T.S

M-10 / M-1 D

12907

AS BUILT
OCT. 1981

M-10

NO	DESCRIPTION	BY	FIRM	DATE	S&P	DATE	PW	DATE
1	PRE BID REVISIONS	JB	FEA	9/77	[illegible]	3/78	[illegible]	3/30/78
	REVISIONS	SUBMITTAL			APPROVAL			

SUBMITTED BY [signature]
REG ENGR FLA NO 6847 DATE 9/76
FLOOD & ASSOCIATES INC

APPROVAL RECOMMENDED BY [signature]
REG ENGR FLA NO 14824 DATE 3-28-78
SVERDRUP & PARCEL AND ASSOCIATES, INC

APPROVED BY
REG ENGR FLA NO ____ DATE ____
WATER AND SEWER DIVISION

AUTHORIZED BY [signature]
REG ENGR FLA NO 42220 DATE 3/30/78
OFFICE OF DIRECTOR OF PUBLIC WORKS
CITY OF JACKSONVILLE, FLORIDA

CITY OF JACKSONVILLE, FLORIDA

SEWERAGE IMPROVEMENT PROGRAM

ST JOHNS BLUFF
MASTER PUMPING STATION

FLOOD & ASSOCIATES, INC.
DESIGN CONSULTANT

SVERDRUP & PARCEL AND ASSOCIATES, INC — GENERAL CONSULTANT

DETAILED BY JAB
CHECKED BY BAB
SCALE AS SHOWN
DATE SEPT 1976

MISCELLANEOUS DETAILS

CONTR NO JS-407 PROJ NO 7316 SHEET NO 13 OF 42

K&E 19 1253 1-76 MC 4465-

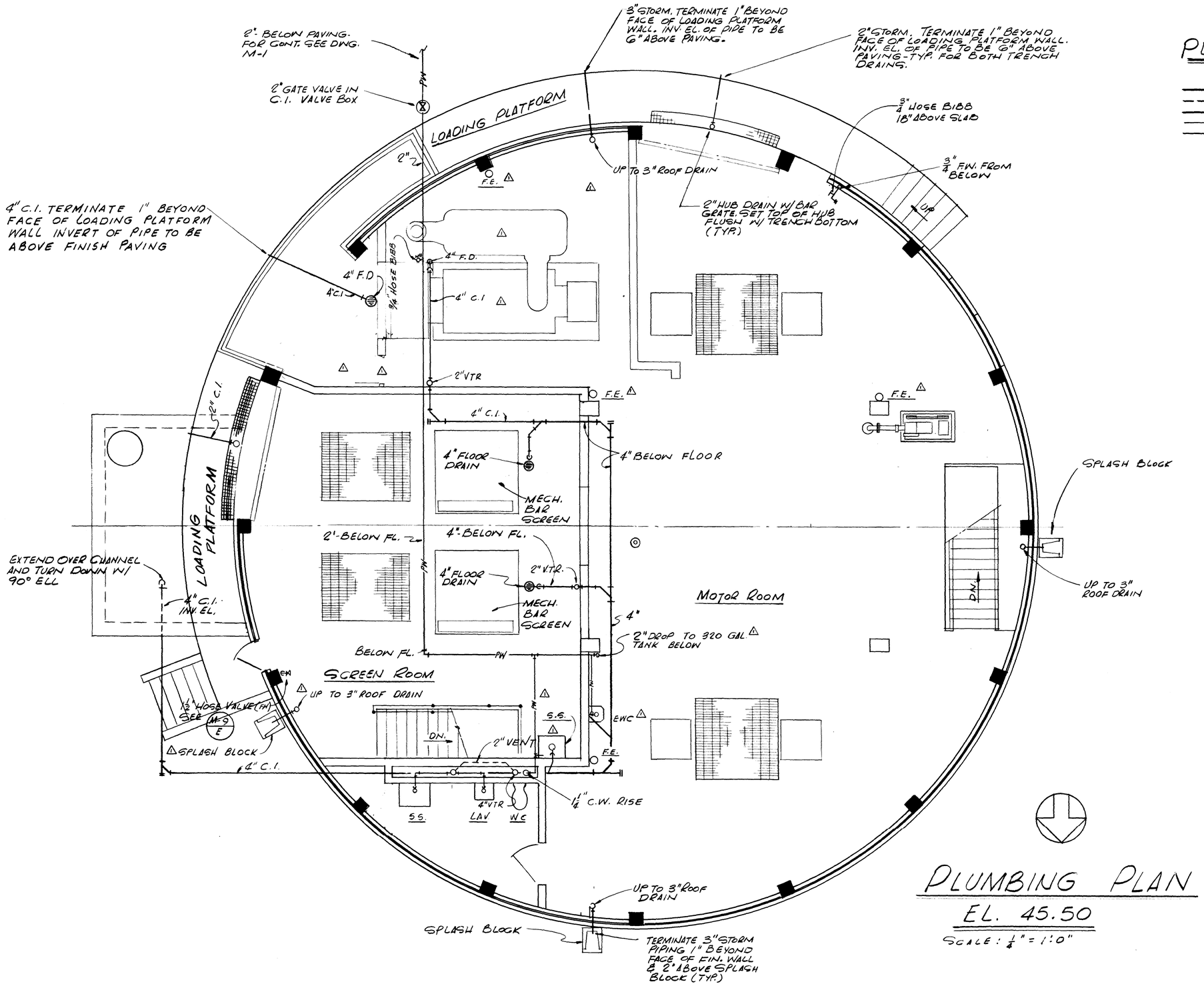

PLUMBING LEGEND

- SOIL OR WASTE
- VENT
- STORM
- PW — POTABLE WATER
- FW — FLUSHING WATER
- F.E. — FIRE EXTINGUISHER - 12 # CAPACITY
- CLEANOUT BELOW FLOOR

PLUMBING PLAN

EL. 45.50

SCALE: 1/4" = 1'-0"

12908 N **AS BUILT** OCT. 1981

P-1

NO.	DESCRIPTION	BY	FIRM	DATE	S&P	DATE	PW	DATE
1	PRE-BID REVISION	JB	FAA	7/77	S&P	3/78	J. HH	3/31/78
	REVISIONS	SUBMITTAL			APPROVAL			

SUBMITTED BY: [signature]
REG. ENGR. FLA. NO. 6847 DATE 9/76
FLOOD & ASSOCIATES, INC.
APPROVAL RECOMMENDED BY [signature]
REG. ENGR. FLA. NO. 14824 DATE 3-22-78
SVERDRUP & PARCEL AND ASSOCIATES, INC.

APPROVED BY:
REG. ENGR. FLA. NO. DATE
WATER AND SEWER DIVISION
AUTHORIZED BY: [signature]
REG. ENGR. FLA. NO. 9220 DATE 3-21-78
OFFICE OF DIRECTOR OF PUBLIC WORKS
CITY OF JACKSONVILLE, FLORIDA

CITY OF JACKSONVILLE, FLORIDA

SEWERAGE IMPROVEMENT PROGRAM
ST. JOHNS BLUFF
MASTER PUMPING STATION

FLOOD & ASSOCIATES, INC.
DESIGN CONSULTANT
SVERDRUP & PARCEL AND ASSOCIATES, INC. — GENERAL CONSULTANT
DETAILED BY: JAB SCALE SHOWN DATE SEPT 1976
CHECKED BY: BAB

PLUMBING PLAN ELEV. 45.50

CONTR. NO. JS-40.7 PROJ. NO. 7316 SHEET NO. 14 OF 42

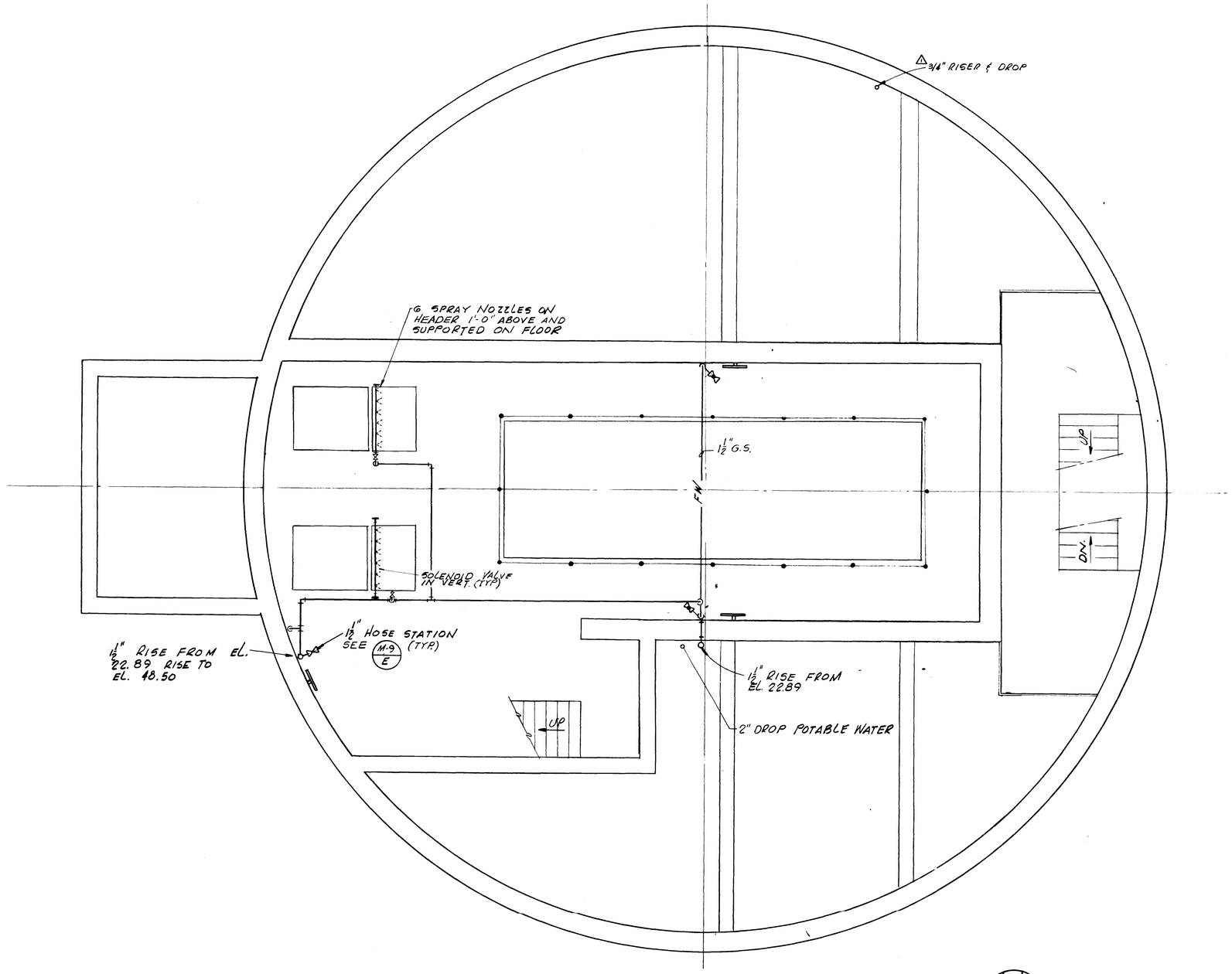

PLUMBING PLAN: EL. 35.50

SCALE: ¼" = 1'-0"

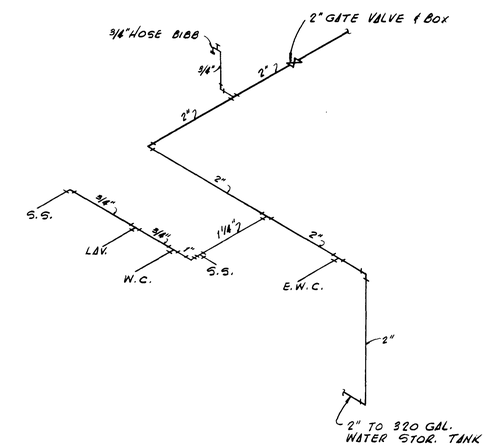

△ POTABLE WATER RISER DIAGRAM

AS BUILT

OCT. 1981

12909

P-2

NO.	DESCRIPTION	BY	FIRM	DATE	S&P	DATE	PW	DATE
△	PRE-BID REVISIONS	JB	F&A	9/77	[illegible]	3/78	JHH	3/1/77
	REVISIONS	SUBMITTAL			APPROVAL			

SUBMITTED BY: [signature] REG. ENGR. FLA. NO. 6847 DATE 9-76
FLOOD & ASSOCIATES, INC.

APPROVAL RECOMMENDED BY: [signature] REG. ENGR. FLA. NO. 14624 DATE 3-28-78
SVERDRUP & PARCEL AND ASSOCIATES, INC.

APPROVED BY: _____ REG. ENGR. FLA. NO _____ DATE _____
WATER AND SEWER DIVISION

AUTHORIZED BY: [signature] REG. ENGR. FLA. NO. 4270 DATE 3/28/78
OFFICE OF DIRECTOR OF PUBLIC WORKS
CITY OF JACKSONVILLE, FLORIDA

CITY OF JACKSONVILLE, FLORIDA

SEWERAGE IMPROVEMENT PROGRAM
ST. JOHNS BLUFF
MASTER PUMPING STATION

FLOOD & ASSOCIATES, INC.
DESIGN CONSULTANT

SVERDRUP & PARCEL AND ASSOCIATES, INC. — GENERAL CONSULTANT

DETAILED BY: CD SCALE SHOWN DATE SEPT 1976
CHECKED BY: BAB

PLUMBING PLAN ELEV. 35.50

CONTR. NO. JS-40.7 PROJ. NO. 7316 SHEET NO. 15 OF 42

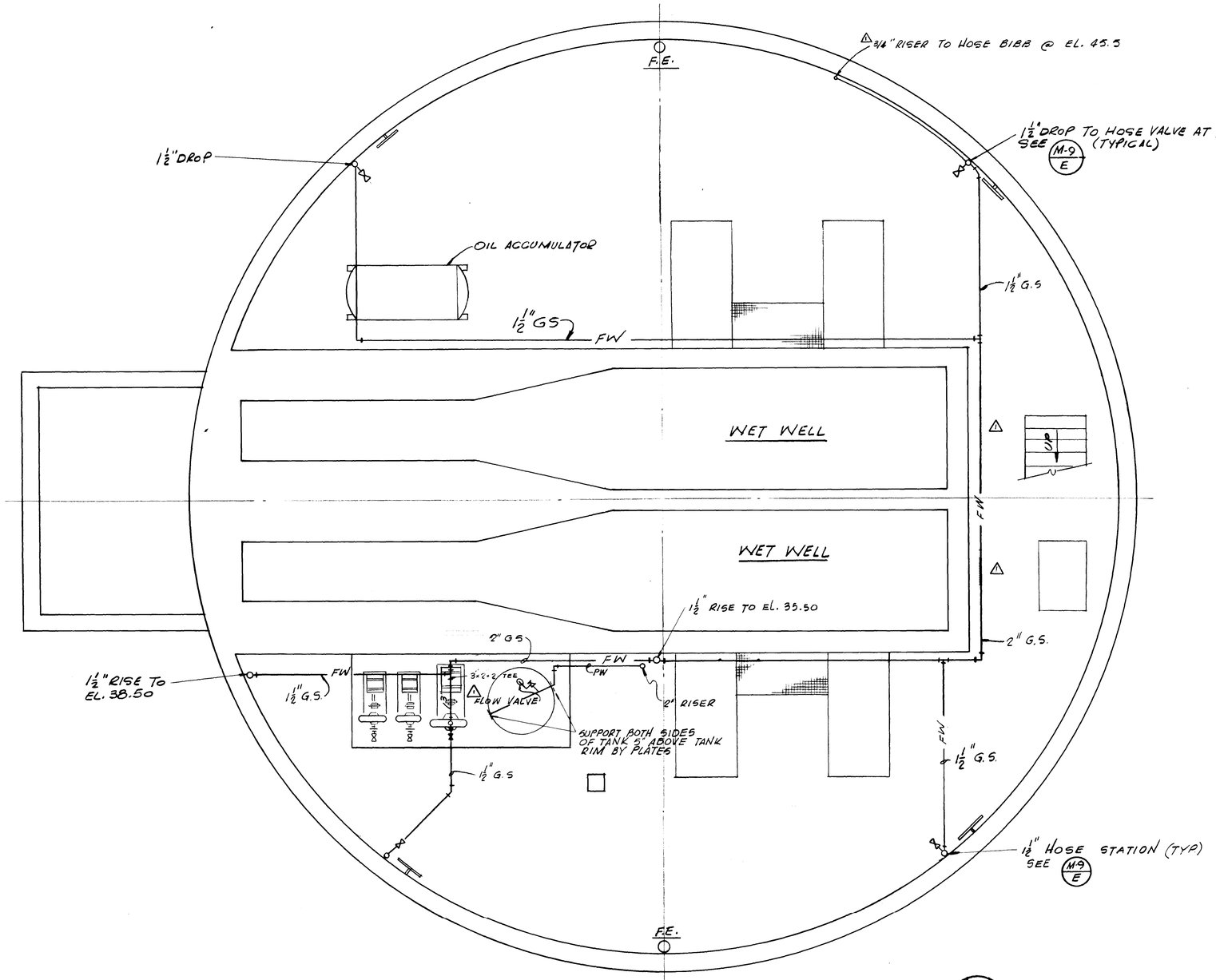

PLUMBING PLAN - EL. 22.89

SCALE: ¼" = 1'-0"

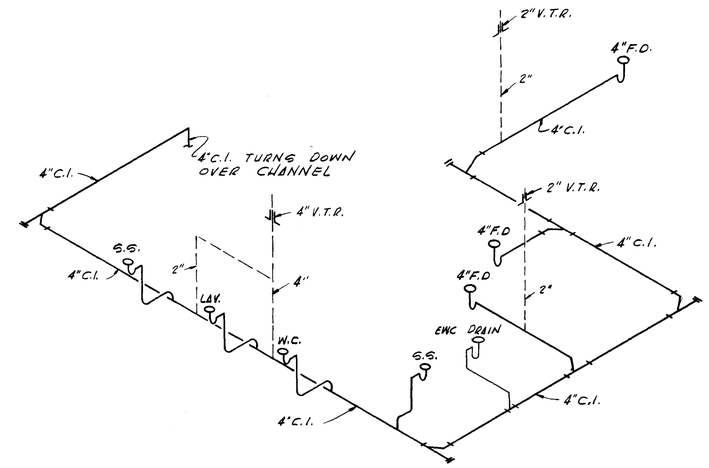

SANITARY RISER DIAGRAM

AS BUILT
OCT. 1981

12910

P-3

NO.	DESCRIPTION	BY	FIRM	DATE	S&P	DATE	PW	DATE
1	PRE BID REVISION	JB	F&A	9/77	[illegible]	3/78	[illegible]	3/28/78
	REVISIONS	SUBMITTAL			APPROVAL			

SUBMITTED BY: [signature]
REG. ENGR. FLA. NO. 6847 DATE 9-76
FLOOD & ASSOCIATES, INC.

APPROVAL RECOMMENDED BY: [signature]
REG. ENGR. FLA. NO. 14224 DATE 3-28-78
SVERDRUP & PARCEL AND ASSOCIATES, Inc.

APPROVED BY: _____
REG. ENGR. FLA. NO. _____ DATE _____
WATER AND SEWER DIVISION

AUTHORIZED BY: [signature]
REG. ENGR. FLA. NO. 19270 DATE 4-5-78
OFFICE OF DIRECTOR OF PUBLIC WORKS
CITY OF JACKSONVILLE, FLORIDA

CITY OF JACKSONVILLE, FLORIDA

SEWERAGE IMPROVEMENT PROGRAM
ST. JOHNS BLUFF
MASTER PUMPING STATION

FLOOD & ASSOCIATES, INC.
DESIGN CONSULTANT
SVERDRUP & PARCEL AND ASSOCIATES, Inc. — GENERAL CONSULTANT

DETAILED BY: CD
CHECKED BY: BAB
SCALE: SHOWN
DATE: SEPT 1976

PLUMBING PLAN ELEV. 22.89

CONTR. NO. JS-40.7 PROJ. NO. 7316 SHEET NO. 16 OF 42

K&E 10 1253 1 78 MC 4465-

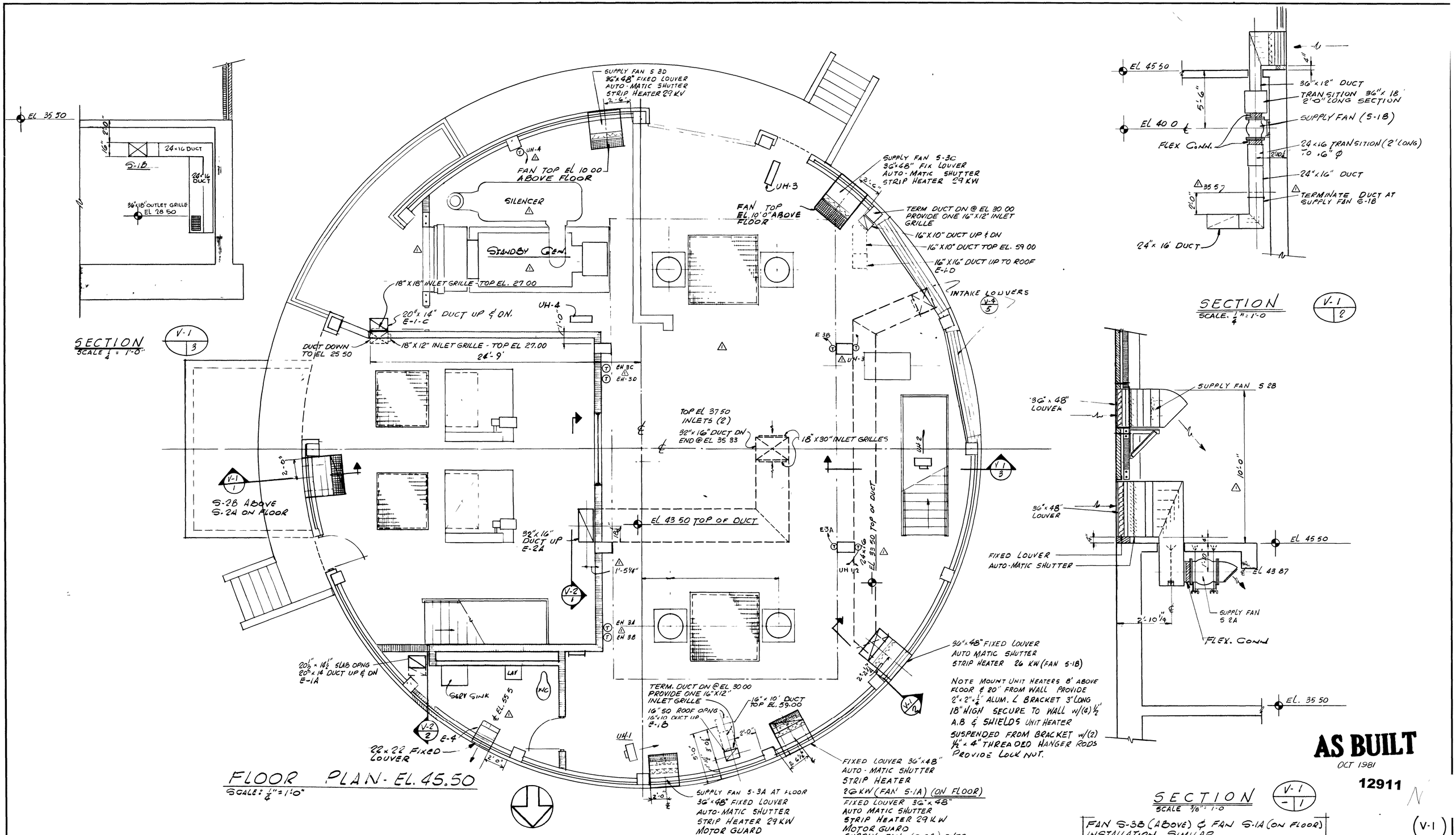

NO	DESCRIPTION	BY	FIRM	DATE	S&P	DATE	PW	DATE
1	PRE BID REVISION	JB	F&A	9/77				
	REVISIONS	SUBMITTAL			APPROVAL			

SUBMITTED BY James B. English
REG ENGR FLA NO 6847 DATE 9/76
FLOOD & ASSOCIATES INC

APPROVAL RECOMMENDED BY
REG ENGR FLA NO 14524 DATE 3-28-78
SVERDRUP & PARCEL AND ASSOCIATES INC

APPROVED BY
REG ENGR FLA NO ____ DATE ____
WATER AND SEWER DIVISION
AUTHORIZED BY
REG ENGR FLA NO 14270 DATE 3-28-78
OFFICE OF DIRECTOR OF PUBLIC WORKS
CITY OF JACKSONVILLE FLORIDA

CITY OF JACKSONVILLE, FLORIDA

SEWERAGE IMPROVEMENT PROGRAM
ST JOHNS BLUFF
MASTER PUMPING STATION

FLOOD & ASSOCIATES, INC.
DESIGN CONSULTANT
SVERDRUP & PARCEL AND ASSOCIATES, Inc — GENERAL CONSULTANT

DETAILED BY C D | SCALE AS SHOWN | DATE SEPT 1976
CHECKED BY B A B

HEATING & VENTILATION/ PLAN AT ELEV 45.50

CONTR NO JS 40 7 | PROJ NO 7316 | SHEET NO 17 OF 42

K&E 10 1253 1 76 MC 4465•

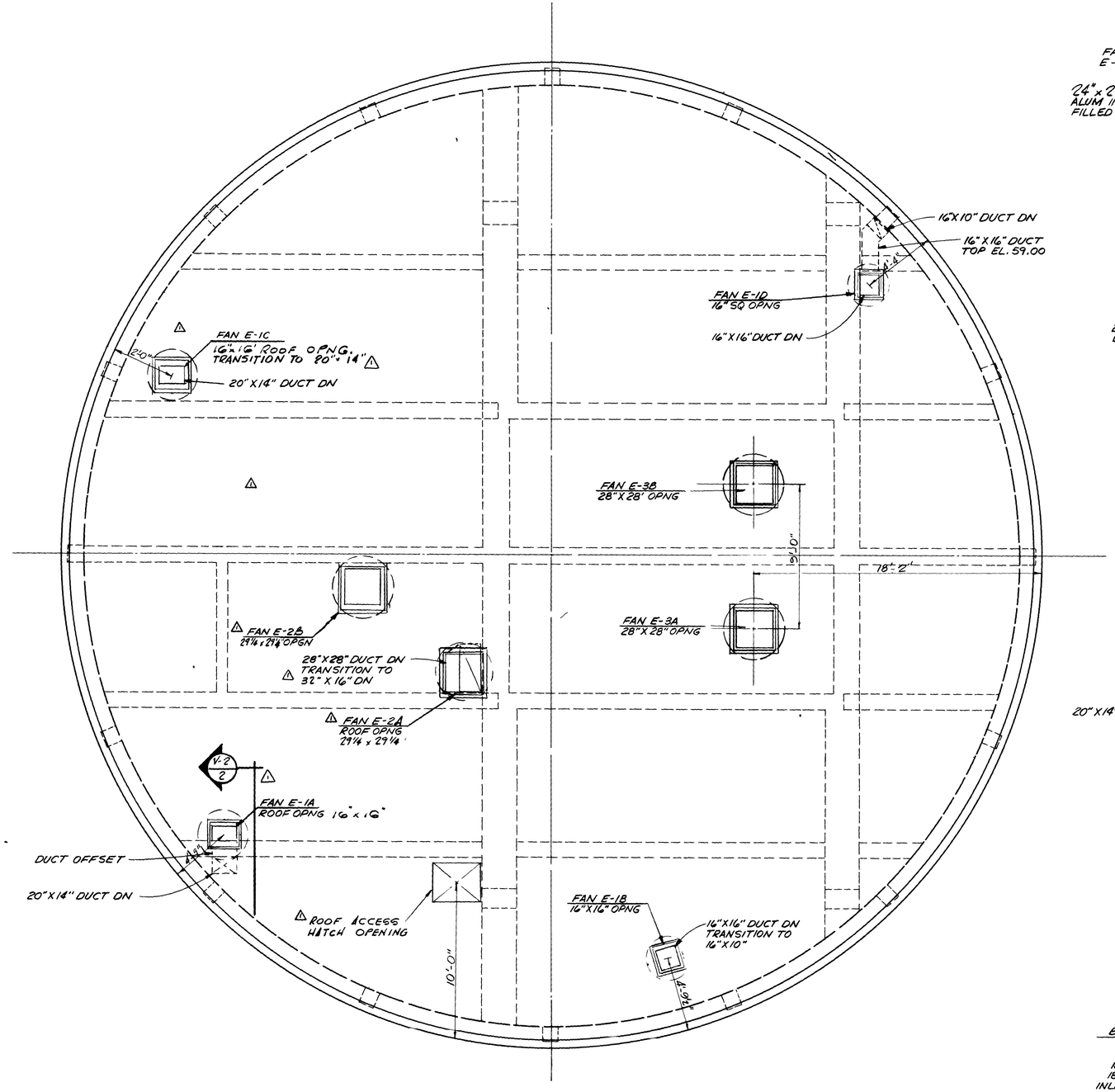

ROOF PLAN

SCALE. 1/4 = 1'-0"

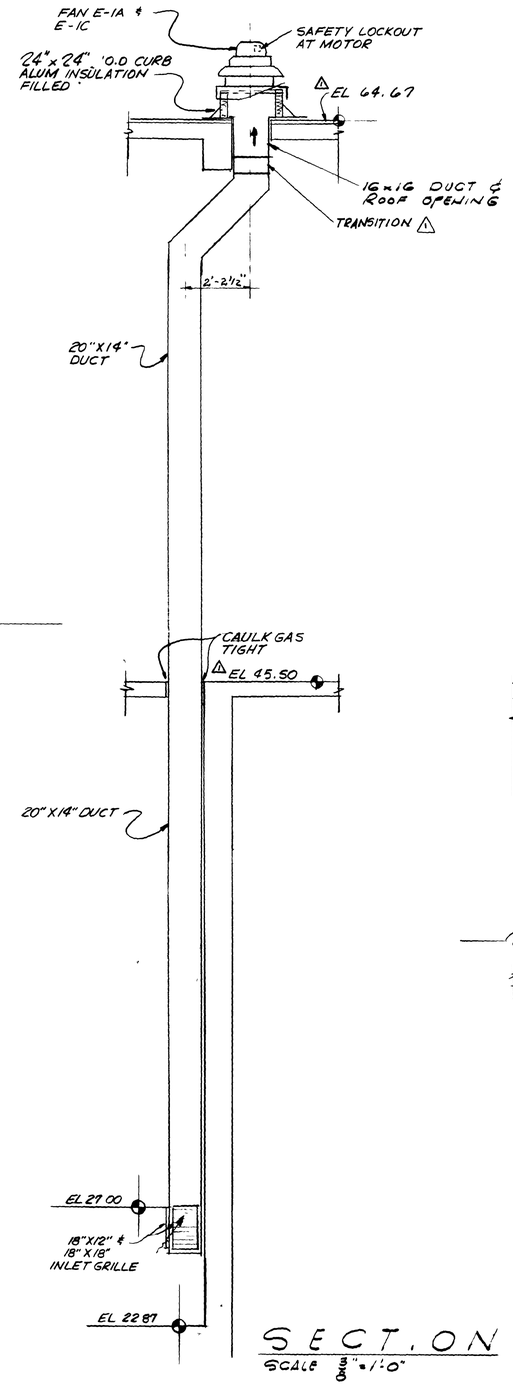

SECTION

SCALE 3/8" = 1'-0"

V-2 / V-1 2

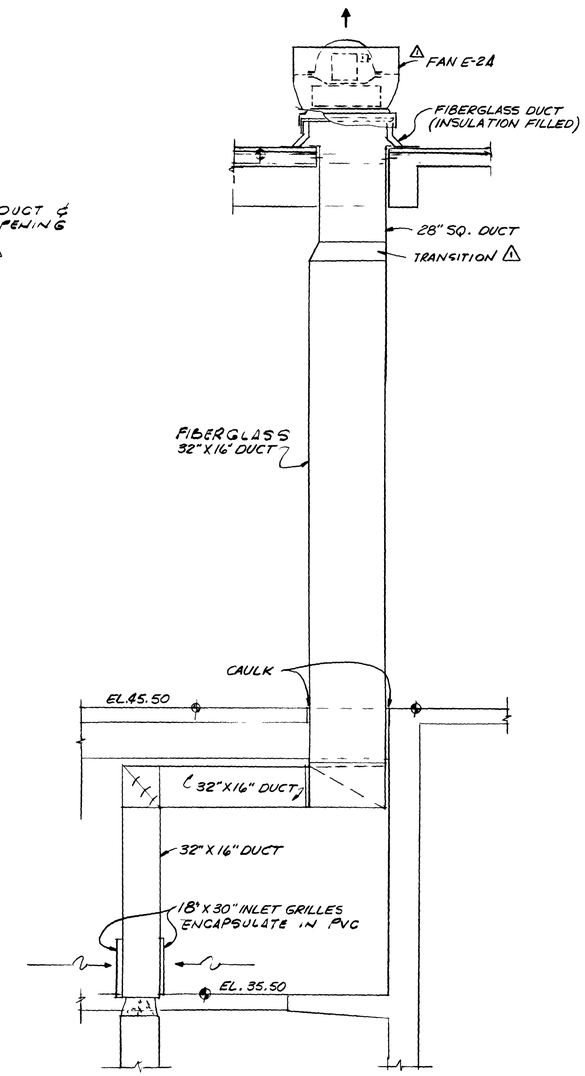

SECTION

SCALE: 3/8" = 1'-0"

V-2 / V-1 1

AS BUILT

OCT 1981

12912

V-2

NO	DESCRIPTION	BY	FIRM	DATE	S&P	DATE	PW	DATE
1	PRE BID REVISION	JB	F&A	9/77	[illegible]	3/78	[illegible]	[illegible]
	REVISIONS	SUBMITTAL			APPROVAL			

SUBMITTED BY James B. English
REG ENGR FLA NO 6847 DATE 9/76
FLOOD & ASSOCIATES INC

APPROVAL RECOMMENDED BY [illegible]
REG ENGR FLA NO 14824 DATE 3 28 78
SVERDRUP & PARCEL AND ASSOCIATES, Inc

APPROVED BY
REG ENGR FLA NO. DATE
WATER AND SEWER DIVISION

AUTHORIZED BY [illegible]
REG ENGR FLA NO [illegible] DATE 3-28-78
OFFICE OF DIRECTOR OF PUBLIC WORKS
CITY OF JACKSONVILLE FLORIDA

CITY OF JACKSONVILLE, FLORIDA

SEWERAGE IMPROVEMENT PROGRAM
ST. JOHNS BLUFF
MASTER PUMPING STATION

FLOOD & ASSOCIATES, INC.
DESIGN CONSULTANT

SVERDRUP & PARCEL AND ASSOCIATES, Inc -- GENERAL CONSULTANT

DETAILED BY CD | SCALE AS SHOWN | DATE SEPT 1976
CHECKED BY BAB

HEATING VENTILATION/ROOF PLAN

CONTR NO JS-407 | PROJ NO 7316 | SHEET NO 18 OF 42

K&E 19 12253 1 76 MC 4405+

ELECTRIC STRIP HEATER SCHEDULE

HEATER	SERVES	STEPS	KW	FAN	REMARKS
EH-1A	PUMP RM	2	26	S-1A	INTERLOCK W/ FAN
EH-1B	PUMP RM	2	26	S-1B	" " "
EH-3A	MOTOR RM	2	29	S-3A	" " "
EH-3B	MOTOR RM	2	29	S-3B	" " "
EH-3C	MOTOR RM	2	29	S-3C	" " "
EH-3D	MOTOR RM	2	29	S-3D	" " "

ELECTRICAL SERVICE 480V~3φ

UNIT HEATER SCHEDULE

HEATER Nº	KW	MANUF.	MODEL	CFM	HP	THROW FT	REMARKS
UH-1	7.5	CHROMALOX	LUH-75	425	1/33	22	PROVIDE CR-330 CONT. & NHT-473 THERM
UH-2	7.5						" " " " " " "
UH-3	7.5						" " " " " " "
UH-4	7.5						" " " " " " "

ELECTRICAL SERVICE 480V~3φ

FAN SCHEDULE

FAN No	LOCATION	SERVES	FAN TYPE	CFM	EXT. S.P IN. WG.	MAX. R.P.M.	FAN H.P.	DRIVE	INTERLOCK	MANF.	TYPE	MODEL NO.	REMARKS
S-1A	PUMP RM	PUMP RM	CENTRIFUGAL	2400	1/4	1,140	3/4	V-BELT	FAN E-1A,B	LOREN COOK	CENTRI-VANE	16CV	FIXED LOUVER, AUTO. SHUTTERS, STRIP HEATER, WALL PLENUM, GUARD
△ S-1B	PUMP RM	PUMP RM		2400	3/8	1200	3/4		FAN E-1C,D			16CV	" " " " " " " "
△ S-2A	SCRN RM LOWER	LOWER SCR RM		3,000	1/4	780	1/2		FAN E-2A			20CV	" " " " WALL HOUSING
△ S-2B	SCRN. RM UPPER	UPPER SCR RM		3,900	1/4	1,160	1/2	DIRECT	FAN E-2B	COOLAIR	CDC	CDC 24H11	" " " " WALL HOUSING, GUARD
△ S-3A	MOTOR RM	MOTOR RM		2,700	1/5	870	1/4		FAN E-3A			CDC 24G8	" " " " STRIP HEATER " " "
S-3B					1/5	870	1/4		FAN E-3A				" " " " " " " " "
S-3C					1/5	870	1/4		FAN E-3B				" " " " " " " " "
S-3D					1/5	870	1/4		FAN E-3B				" " " " " " " " "
E-1A	ROOF	PUMP RM	CENTRIFUGAL	1,800	1/4	870	1/4	V-BELT	FAN S-1A	LOREN COOK	UCB	18UC3B	AUTO SHUTTERS, ALUM. CURB, DIS. SW BIRD SCREEN
E-1B				800	1/4	1,300	1/6		FAN S-1A			12UC01B2	
E-1C				1,800	1/4	830	1/4		FAN S-1B			18UC3B	
E-1D				800	1/4	1,300	1/6		FAN S-1B			12UC01B2	
E-2A		SCN RM LOWER		3,300	3/8	704	1/2		FAN S-2A	SWARTWOUT	FIBER-AIRE	24WA4B	FIBERGLASS CURB (INSULATION FILLED) DIS. SW. PVC BIRD SCREEN
E-2B		SCN RM UPPER		3,800	1/4	704	1/2		FAN S-2B	SWARTWOUT	FIBER-AIRE	24WA4B	" " " " " " " " "
E-3A		MOTOR RM		5,300	1/4	731	1		FAN S-3A,B	LOREN COOK	UCB	27UC7B	AUTO SHUTTERS, ALUM. CURB, DIS SW. BIRD SCREEN
E-3B		MOTOR RM		5,300	1/4	731	1		FAN S-3C,D	LOREN COOK	UCB	27UC7B	" " " " " " " "
△ E-4	TOILET ROOM	TOILET		560	1/4	1,100	1/15		LIGHT SWITCH	COOLAIR	UD	UD14C11	FIXED LOUVER, AUTO SHUTTERS, WALL SLEEVE, GUARD

FAN NOTES

1. FANS S-2A, S-2B, E-2A & E-2B TO BE EXPLOSION PROOF. METAL SURFACES OF FANS & DUCT SYSTEMS TO BE ENCAPSULATED IN PVC COATING
2. FANS & ACCESSORIES SHALL BE ALUM UNLESS INDICATED OTHERWISE FAN MFG. TO PROVIDE WALL HOUSINGS & SLEEVES FOR PROPELLER FANS
3. ELECTRICAL SERVICE SHALL BE 460V, 3φ & 110V, 1φ
△ 4. ALL LOUVERS SHALL BE INSTALLED SUCH TO PERMIT EASY ACCES TO AND FOR REMOVAL OF SCREENS

DOOR LOUVERS & GRILLES

GRILLE	TUTTLE & BAILEY	CRE-500, RL FINISH
DOOR LOUVER	" " "	" " " "

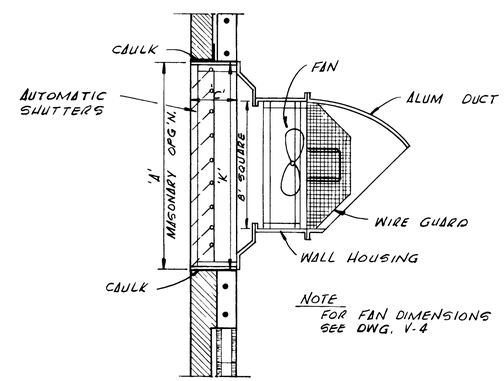

△ EXHAUST FAN E-4
NTS.

V-3 / V-1 | 4

12913

AS BUILT
OCT, 1981

V-3

NO	DESCRIPTION	BY	FIRM	DATE	S&P	DATE	PW	DATE
△	PRE BID REVISIONS	JB	F&A	9/77	SP	3/78	HH	3/31/78
	REVISIONS	SUBMITTAL			APPROVAL			

SUBMITTED BY James S. Campbell
REG ENGR FLA NO 6847 DATE 9/76
FLOOD & ASSOCIATES INC
APPROVAL RECOMMENDED BY George C. Shi...
REG ENGR FLA NO 14824 DATE 3 28 78
SVERDRUP & PARCEL AND ASSOCIATES INC

APPROVED BY
REG ENGR FLA NO DATE
WATER AND SEWER DIVISION
AUTHORIZED BY Joe H. Davis
REG ENGR FLA NO 4270 DATE 4/3/78
OFFICE OF DIRECTOR OF PUBLIC WORKS
CITY OF JACKSONVILLE, FLORIDA

CITY OF JACKSONVILLE, FLORIDA
SEWERAGE IMPROVEMENT PROGRAM
ST JOHNS BLUFF
MASTER PUMPING STATION

FLOOD & ASSOCIATES, INC.
DESIGN CONSULTANT
SVERDRUP & PARCEL AND ASSOCIATES, INC — GENERAL CONSULTANT
DETAILED BY JWD SCALE AS SHOWN DATE SEPT 1976
CHECKED BY BAB

HEATING & VENTILATION/SCHEDULES

CONTR NO JS-407 PROJ NO 7316 SHEET NO 19 OF 42

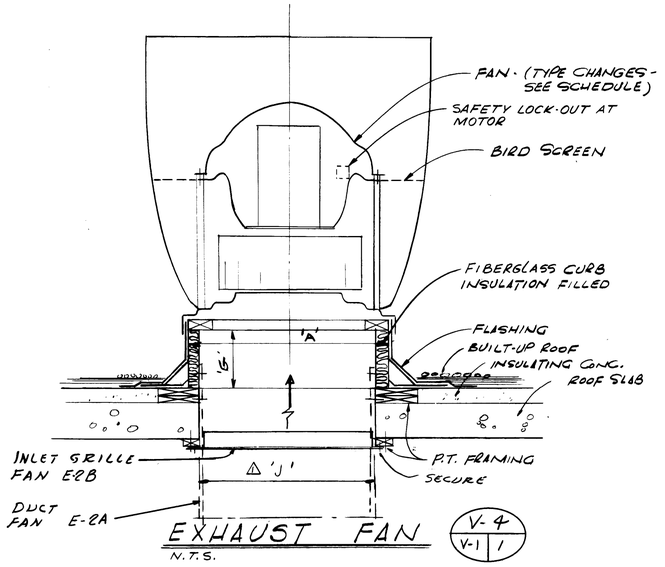

EXHAUST FAN (V-4 / V-1 1)

N.T.S.

FANS E-2A & E-2B SIMILAR

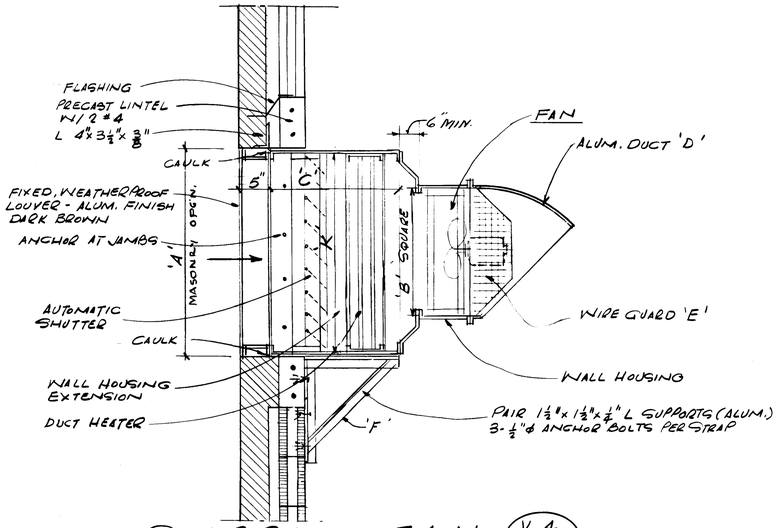

SUPPLY FAN (V-4 / V-1 2)

N.T.S.

△ FANS S-2B, S-3B, S-3C & S-3D

	FAN DIMENSIONS										
FAN SERVES	FAN NO.	'A'	'B'	'C'	'D'	'E'	'F'	'G'	'H'	J	K
PUMP RM.	S-1A	36½ X 48½"	32¼"x32¼"	20"	—	—	—	—	—		36¼ x 48¼
PUMP RM.	S-1B	36½"X 48½"		20"	—	—	—	—	—		
SCRN. RM. LO.	S-2A	36½"X 48½"		20"	—	—	—	—	—		
SCRN. RM. UP	S-2B	36½"X48½"		20"	YES	—	—	—	—		
MOTOR RM.	S-3A	36½"x48½"		20"	—	YES	YES	—	—		
MOTOR RM.	S-3B	36½ x 48½"		20"	YES	—	YES	—	—		
MOTOR RM.	S-3C	36½ x 48½"		20"	YES	—	YES	—	—		
MOTOR RM	S-3D	36½" x 48½"	32¼x32¼	20"	YES	—	YES	—	—		36¼x 48¼"
PUMP RM	E-1A	22½" x 22½"	—	—				12"		16"x16"	—
PUMP RM.	E-1B		—	—				12"		16"x16"	—
PUMP RM.	E-1C		—	—				12"		16"x16"	—
PUMP RM	E-1D	22½" x 22½"	—	—				12"		16"x16"	—
SCRN. RM. LO.	E-2A	34¾ x 34¾	—	—				12"		29¼x29¼	—
SCRN. RM. UP.	E-2B	34¾" x 34¾	—	—				12"		29¼x29¼	—
MOTOR RM.	E-3A	34½ x 34½	—	—				12"		28"x28"	—
MOTOR RM.	E-3B	34½ x 34½	—	—				12"		28"x 28"	—
TOILET	E-4	22½"X 22½"	22¼x22¼"	10"				—		—	22¼x 22¼

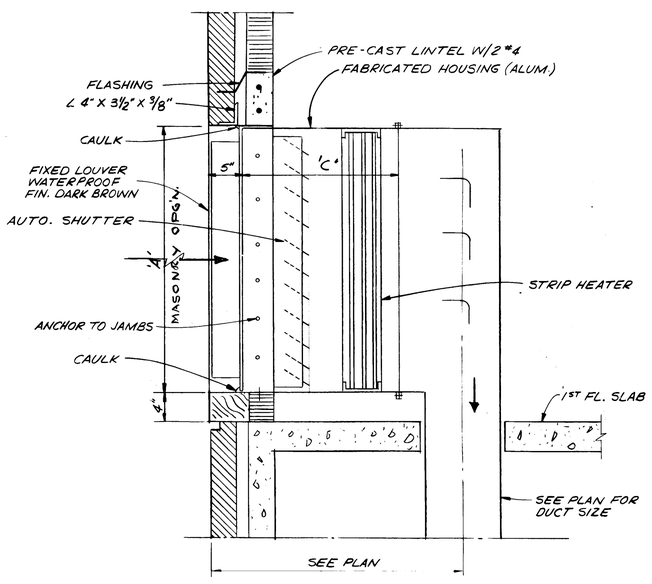

SUPPLY FAN (V-4 / V-1 3)

N.T.S.

FANS S-1A, S-1B & S-2A

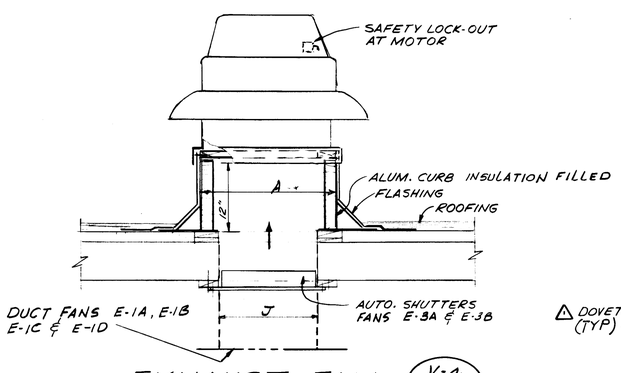

EXHAUST FAN (V-4 / V-1 4)

N.T.S.

△ FANS E-1A, E-1B, E-1C, E-1D, E-3A & E-3B

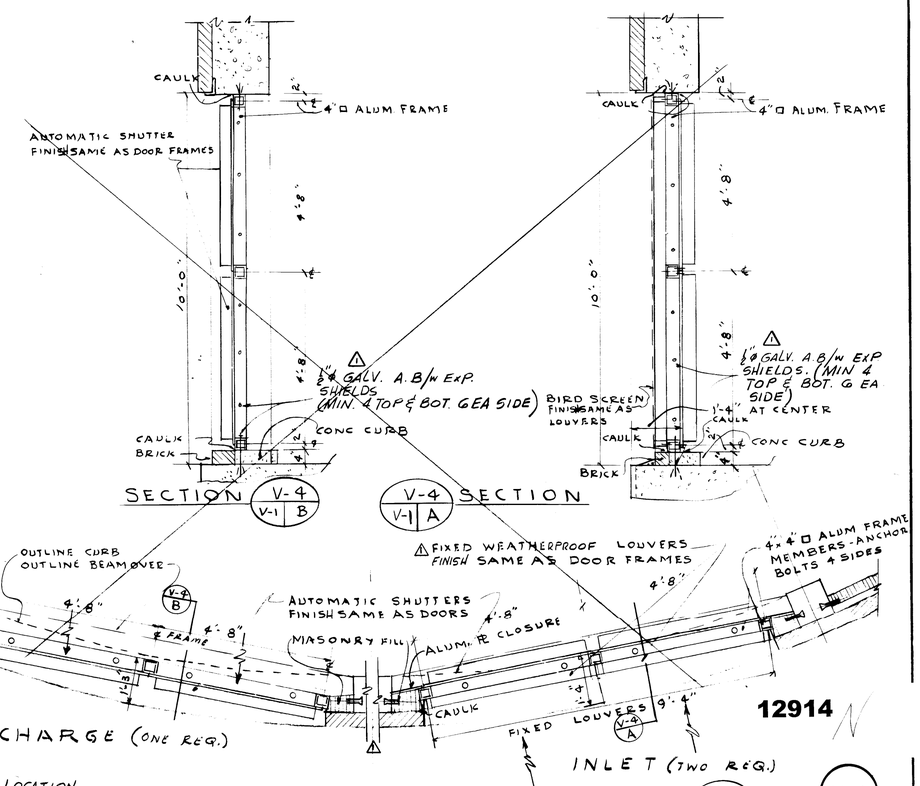

△ NOTE: FOR LOUVER LOCATION SEE DWG. M-2

GENERATOR LOUVERS (V-4 / 5)

SCALE 1/2" = 1'-0"

12914

V-4

AS BUILT

OCT. 1981

NO.	DESCRIPTION	BY	FIRM	DATE	S&P	DATE	PW	DATE
△	PRE BID REVISION	JB	F&A	9/77		3/75	J.H.H.	3/4/78
	REVISIONS	SUBMITTAL			APPROVAL			

SUBMITTED BY: James S. Engelhardt
REG. ENGR. FLA. NO. 6847 DATE 9/76
FLOOD & ASSOCIATES, INC.
APPROVAL RECOMMENDED BY: [signature]
REG. ENGR. FLA. NO. [illegible] DATE 9-20-78
SVERDRUP & PARCEL AND ASSOCIATES, INC

APPROVED BY: _____
REG. ENGR. FLA. NO. _____ DATE _____
WATER AND SEWER DIVISION
AUTHORIZED BY: [signature]
REG. ENGR. FLA. NO. [illegible] DATE 9-20-78
OFFICE OF DIRECTOR OF PUBLIC WORKS
CITY OF JACKSONVILLE, FLORIDA

CITY OF JACKSONVILLE, FLORIDA

SEWERAGE IMPROVEMENT PROGRAM
ST. JOHNS BLUFF
MASTER PUMPING STATION

FLOOD & ASSOCIATES, INC.
DESIGN CONSULTANT
SVERDRUP & PARCEL AND ASSOCIATES, Inc. — GENERAL CONSULTANT

DETAILED BY: J.A.B. SCALE AS SHOWN DATE SEPT. 1976
CHECKED BY: B.A.B.

HEATING & VENTILATION/
SCHEDULES & SECTIONS

CONTR. NO. JS 40.7 PROJ. NO. 7316 SHEET NO. 20 OF 42

A.R. COGSWELL CO., JACKSONVILLE, FLORIDA N-14419

DESIGN CRITERIA

(ALL DESIGN PER "CITY OF JACKSONVILLE, FLORIDA" BUILDING CODE, EXCEPT AS NOTED.)

1. LIVE LOADS:
   ROOF — 20# / SQ. FT.
   FLOORS — 100# / SQ. FT.
2. ALLOWABLE UNIT STRESSES:
   CONCRETE (DESIGN PER CURRENT EDITION A.C.I.-318)
   f'c = AS SPECIFIED.
   STRUCTURAL STEEL (DESIGN PER CURRENT EDITION A.I.S.C. "MANUAL OF STEEL CONSTRUCTION")
   SOIL BEARING (DESIGN MAXIMUM) — 2,000# / SQ. FT.

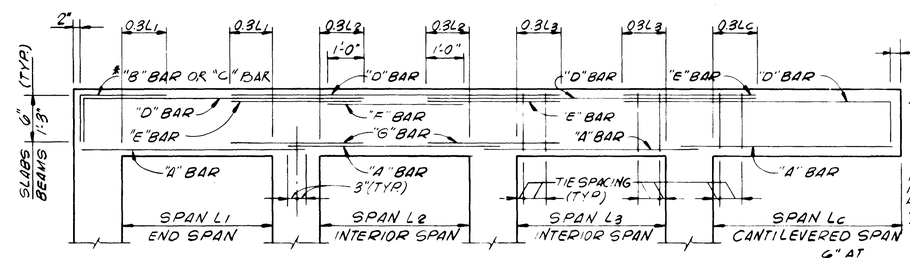

* "B" BAR AT BEGINNING OF BEAM
"C" BAR AT ENDING OF BEAM

BEAM AND SLAB BENDING DIAGRAM
NO SCALE

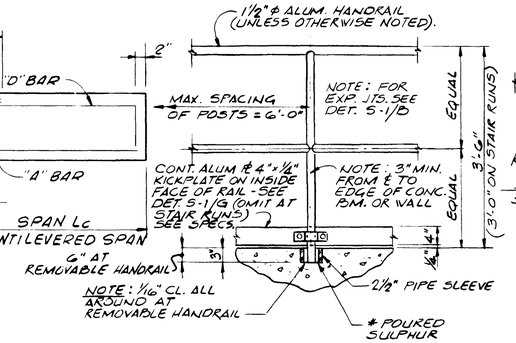

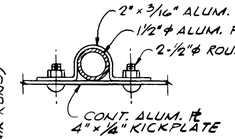

KICKPLATE DETAIL (S-1 / G)
SCALE: 3" = 1'-0"

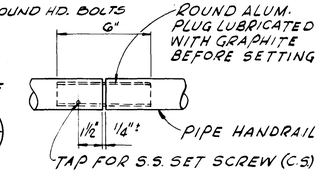

HANDRAIL EXPANSION JOINT DETAIL (S-1 / B)
TYPICAL @ 25' O.C. ± MAX.
(TOP AND BOTTOM RAIL)

GENERAL STRUCTURAL NOTES

1. CONCRETE FOR SIDEWALKS & FILL SHALL BE CLASS "C" ALL OTHERS SHALL BE CLASS "A" SEE SPECIFICATIONS FOR MIX DESIGN STRENGTH.
2. UNLESS OTHERWISE SHOWN ON DRAWINGS, MINIMUM COVER FOR REINFORCING SHALL BE AS FOLLOWS:
   FOOTINGS — 3"
   SURFACES CONTACTING LIQUID — 2"
   COLUMNS & PEDESTALS (OVER VERT. REINF.) — 2"
   WALLS — 2
   SLABS — ¾"
   BEAMS (OVER MAIN REINF.) — 1½"
   ALL CONC. POURED DIRECTLY ON GROUND — 3"
3. ALL REINFORCING SHALL BE HELD SECURELY IN POSITION WITH STANDARD ACCESSORIES DURING PLACING OF THE CONCRETE. ACCESSORIES TO HAVE PRIOR APPROVAL.
4. SPLICES IN REINFORCING, WHERE PERMITTED, SHALL BE IN ACCORDANCE WITH THE SCHEDULE SHOWN BELOW (UNLESS OTHERWISE NOTED), LARGER BAR SPLICED.
5. IN TWO-WAY SLABS PLACE SHORT SPAN BARS IN OUTER LAYER, UNLESS OTHERWISE NOTED.
6. TERMINATE ALL TOP BARS AT DISCONTINUOUS ENDS OF BEAMS WITH A STANDARD 90° HOOK.
7. MEMBRANE WATERPROOFING TO BE ASPHALT SATURATED FELTS (SEE SPECIFICATIONS), DAMP CHECK MEMBRANE (MOISTURE BARRIER) TO BE POLYETHYLENE SHEETS (SEE SPECIFICATIONS).
8. SEE ARCHITECTURAL AND MECHANICAL DRAWINGS FOR ADDITIONAL EMBEDDED ITEMS NOT DETAILED.
9. UNLESS OTHERWISE NOTED, SPLICES IN TOP REINFORCING SHALL BE MADE AT MID-SPAN.
10. PROVIDE ¼" PREMOULDED EXPANSION JOINT MATERIAL WHERE SLAB ON GRADE IS POURED AROUND COLUMNS & AGAINST GRADE BEAMS OR WALLS UNLESS OTHERWISE SHOWN
11. STEEL STAIR STRINGERS SHALL BE FABRICATED AS CONTINUOUS BENT BEAMS UNLESS OTHERWISE SHOWN.
12. A LIFT HOLE SHALL BE PROVIDED IN EACH PIECE OF FLOOR PLATE.
13. SET PIPE HANDRAILS ON CONC. STAIRS IN PIPE SLEEVES UNLESS OTHERWISE SHOWN.
14. ALL PRECAST LINTELS SHALL BE REINFORCED WITH 2 #4 TOP & BOT. AS A MIN. & SHALL HAVE A MIN. MASONRY END BEARING OF 8".
15. CONTRACTOR SHALL VERIFY ALL EXISTING DIMENSIONS BEFORE PROCEEDING WITH CONSTRUCTION.
16. ALL STRUCT. OPENINGS AROUND OR AFFECTED BY MECH., ELECT. & PLUMBING EQUIPMENT SHALL BE VERIFIED WITH EQUIPMENT PURCHASED BEFORE PROCEEDING WITH STRUCT. WORK AFFECTED.
17. PROVIDE ¾" CHAMFER ON ALL EXPOSED CORNERS OF BEAMS, COLUMNS, WALLS, ETC.
18. DOWELS FROM SLABS TO WALLS, SHALL MATCH SIZE OF WALL REINF. AND BE IMBEDDED A SPLICE LENGTH INTO SLAB (UNLESS OTHERWISE NOTED).
19. IT IS THE REQUIREMENT AND INTENT OF THE PLANS & SPECS. THAT THE PUMPING STATION AND OTHER SUB-GRADE STRUCTURES TO BE CONSTRUCTED WATER TIGHT TO PREVENT EITHER EXFILTRATION OF TANK CONTENTS OR INFILTRATION OF GROUNDWATER; TO THIS END EFFECT, WATERSTOPS SHALL BE USED IN ALL EXTERIOR CONST. JTS. & EXP. JOINTS OF TANKS, PITS & WALLS, WHETHER OR NOT SPECIFICALLY NOTED.
20. CONSTRUCTION JOINTS SHALL BE SPACED 50' O.C. MAX. IN ANY DIRECTION, UNLESS OTHERWISE APPROVED BY THE DESIGN CONSULTANT.
21. ACTUAL FINISH GRADE ELEVATIONS MAY VARY FROM APPROX. ELEVATIONS SHOWN ON THE STRUCTURAL DWGS. SEE SITE & GRADING PLANS FOR ACTUAL ELEV.

BEAM AND SLAB NOTES:

1. IN BEAM SCHEDULE, TIE SPACING + INDICATES A TIE PLACED NEAR END OF TOP BAR.
2. MINIMUM CLEAR HORIZ. DISTANCE BETWEEN BARS TO BE 1½ TIMES DIAMETER BAR; WHERE NECESSARY BARS SHALL BE PLACED IN TWO LAYERS TO MAINTAIN THIS REQUIREMENT
3. SEE PLANS & SECTIONS FOR ADDITIONAL REINFORCING NOT SHOWN
4. DEPTH OF BEAM SHOWN IN SCHEDULE IS MEASURED FROM DEEPEST DEPRESSION IN BEAM.
5. WHERE TIE PLACEMENT EXCEEDS LENGTH OF TOP BARS PROVIDE 2 #3 SPACER BARS FOR SUPPORT OF FREE STANDING TIES.
6. IN BEAM SCHEDULE, WHERE BARS ARE IN TWO LAYERS: THE OUTER LAYER IS SCHEDULED FIRST. PROVIDE 1" CLEAR BETWEEN LAYERS.

HANDRAIL DETAIL (S-1 / A)
SCALE: ¾" = 1'-0"
* OMIT POURED SULPHUR AT REMOVABLE HANDRAIL.

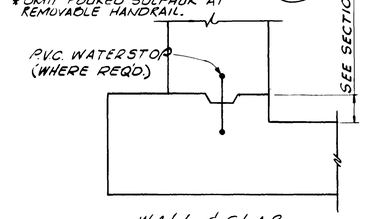

WALL & SLAB

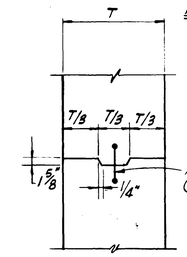

NOTES:
1. REINF. TO CONTINUE THRU CONST. JTS.
2. SEE PLANS FOR LOCATIONS OF JTS. THE USE OF DIFFERENT LOCATIONS MUST BE APPROVED BY THE DESIGN CONSULTANT.

TYPICAL KEY

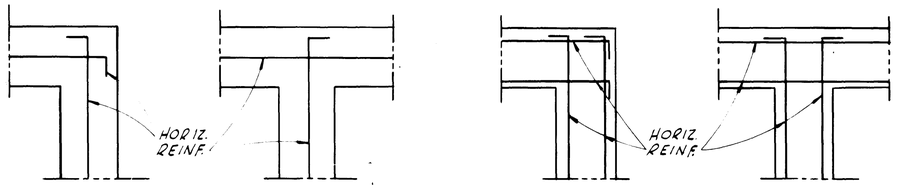

SINGLE LAYER — 2-LAYERS

TYPICAL CONCRETE WALL CORNER DETAILS
NO SCALE

NOTE:
ALL HOOKS ARE STANDARD 90°

TYPICAL JOINT DETAILS
NO SCALE

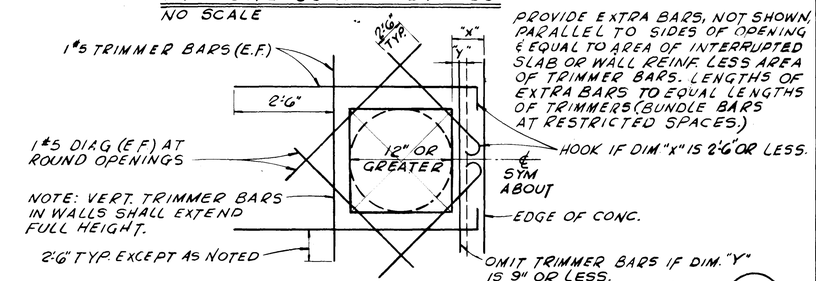

TYPICAL DETAIL ~ OPENING IN WALL OR SLAB (S-1 / C)
NO SCALE

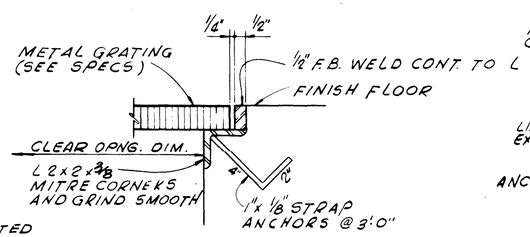

NOTE: ALL GRATING AND FRAMES ARE ALUMINUM UNLESS SPECIFICALLY SHOWN OTHERWISE.

TYPICAL GRATING DETAIL (S-1 / D)
NO SCALE
(DIMENSIONS SHOWN ON DWG'S ARE CLEAR OPENINGS)

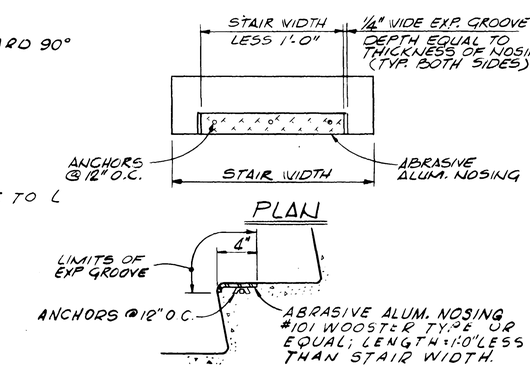

NOTE: EXPANSION GROOVE AT EXTERIOR STAIRS ONLY.

TYPICAL DETAIL CONCRETE STAIR NOSING (S-1 / E)
NO SCALE

MINIMUM SPLICE LENGTHS

BAR SIZE	TOP REINF.	ALL OTHER REINF.
#3	1'-2"	1'-0"
#4	1'-7"	1'-2"
#5	2'-0"	1'-5"
#6	2'-7"	1'-10"
#7	3'-6"	2'-6"
#8	4'-7"	3'-3"
#9	5'-7"	4'-2"
#10	7'-4"	5'-3"
#11	9'-1"	6'-6"

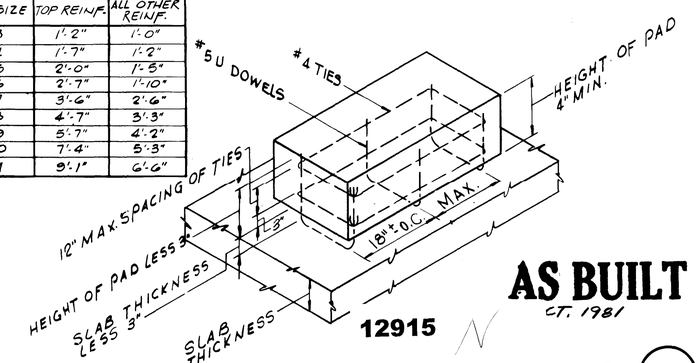

AS BUILT
CT. 1981
12915

TYPICAL EQUIPMENT PAD DETAIL (S-1 / F) (S-1)
NO SCALE

NO.	DESCRIPTION	BY	FIRM	DATE	S&P	DATE	PW	DATE
	REVISIONS	SUBMITTAL			APPROVAL			

SUBMITTED BY: [signature]
REG. ENGR. FLA. NO. 6847 DATE 11/76
FLOOD & ASSOCIATES, INC.
APPROVAL RECOMMENDED BY: [signature]
REG. ENGR. FLA. NO. 14864 DATE 3-22-78
SVERDRUP & PARCEL AND ASSOCIATES, INC.

APPROVED BY:
REG. ENGR. FLA. NO. ____ DATE ____
WATER AND SEWER DIVISION
AUTHORIZED BY: [signature]
REG. ENGR. FLA. NO. 19270 DATE 3/30/78
OFFICE OF DIRECTOR OF PUBLIC WORKS
CITY OF JACKSONVILLE, FLORIDA

CITY OF JACKSONVILLE, FLORIDA
SEWERAGE IMPROVEMENT PROGRAM
ST. JOHNS BLUFF
MASTER PUMPING STATION

FLOOD & ASSOCIATES, INC.
DESIGN CONSULTANT
SVERDRUP & PARCEL AND ASSOCIATES, INC. — GENERAL CONSULTANT
DETAILED BY: S.E.M. SCALE AS SHOWN DATE SEPT. 1976
CHECKED BY: L.T.H.

GENERAL NOTES & TYPICAL DETAILS

CONTR. NO. JS-40.7 PROJ. NO. 7316 SHEET NO. 21 OF 42

K&E 10-1253 2-72 49357+

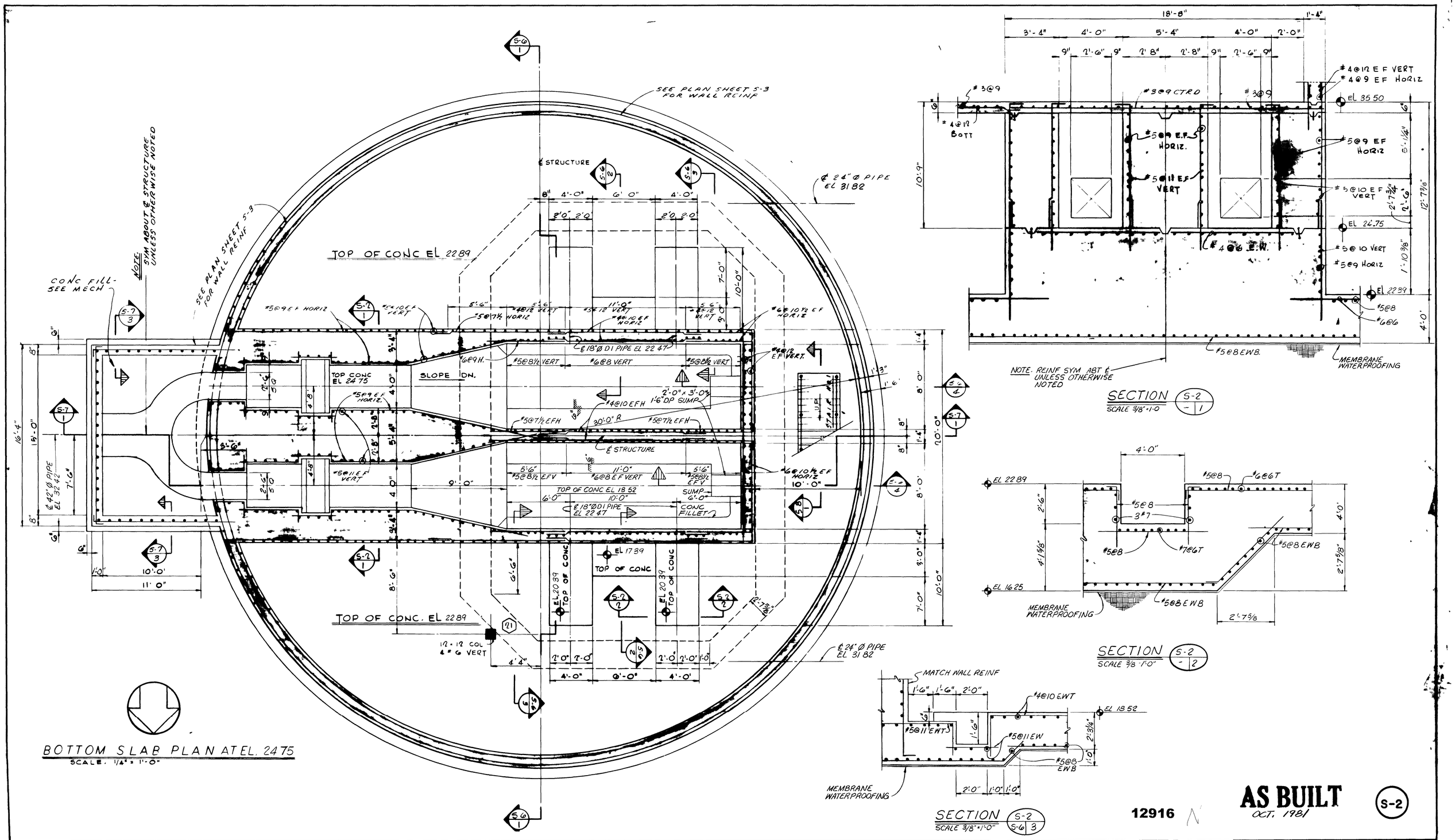

12916

AS BUILT
OCT. 1981

S-2

NO	DESCRIPTION	BY	FIRM	DATE	S&P	DATE	PW	DATE
	REVISIONS	SUBMITTAL			APPROVAL			

SUBMITTED BY James S. Engelhardt
REG ENGR FLA NO 6847 DATE 9/76
FLOOD & ASSOCIATES INC

APPROVAL RECOMMENDED BY Hugh C. Johnson
REG ENGR FLA NO 14824 DATE 3 28 78
SVERDRUP & PARCEL AND ASSOCIATES INC

APPROVED BY
REG ENGR FLA NO DATE
WATER AND SEWER DIVISION
AUTHORIZED BY Earl H. Peters
REG ENGR FLA NO 9270 DATE 3/30/78
OFFICE OF DIRECTOR OF PUBLIC WORKS
CITY OF JACKSONVILLE FLORIDA

CITY OF JACKSONVILLE, FLORIDA

SEWERAGE IMPROVEMENT PROGRAM
ST. JOHNS BLUFF
MASTER PUMPING STATION

FLOOD & ASSOCIATES, INC.
DESIGN CONSULTANT
SVERDRUP & PARCEL AND ASSOCIATES, INC — GENERAL CONSULTANT

DETAILED BY JAB
CHECKED BY LTH
SCALE AS SHOWN
DATE SEPT. 1976

BOTTOM SLAB PLAN AT ELEV. 24.75

CONTR NO JS-407 PROJ NO 7316 SHEET NO 22 OF 42

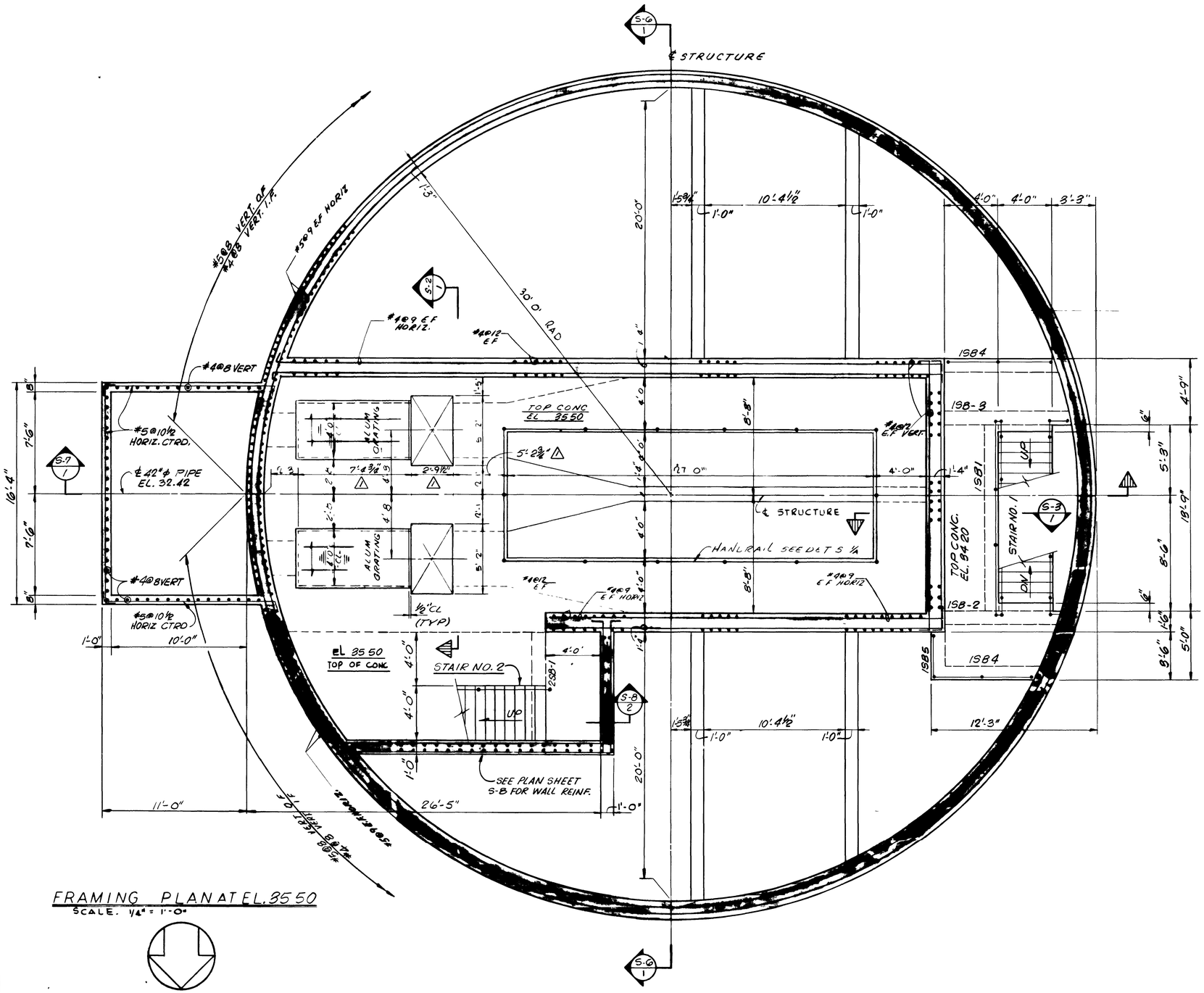

FRAMING PLAN AT EL. 35.50
SCALE. 1/4" = 1'-0"

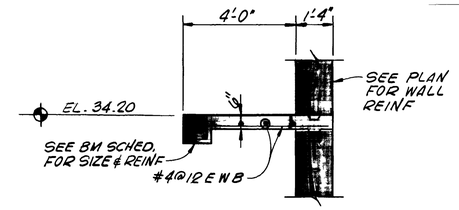

SECTION S-3 / 1
SCALE: 3/8" = 1'-0"

12917

AS BUILT
OCT. 1981

S-3

NO	DESCRIPTION	BY	FIRM	DATE	S&P	DATE	PW	DATE
1	REVISED PER MECH BAR SCREEN FURNISHED	FWS	F&A	1-79	GEC	1/79	JHH	1/19/79
	REVISIONS	SUBMITTAL			APPROVAL			

SUBMITTED BY James S. Crosland
REG ENGR FLA NO 6847 DATE 9/76
FLOOD & ASSOCIATES INC

APPROVAL RECOMMENDED BY George F. Shaw
REG ENGR FLA NO 14824 DATE 3-28-78
SVERDRUP & PARCEL AND ASSOCIATES INC

APPROVED BY
REG ENGR FLA NO — DATE
WATER AND SEWER DIVISION
AUTHORIZED BY John W. Hurst
REG ENGR FLA NO 19270 DATE 3-30-78
OFFICE OF DIRECTOR OF PUBLIC WORKS
CITY OF JACKSONVILLE FLORIDA

CITY OF JACKSONVILLE, FLORIDA

SEWERAGE IMPROVEMENT PROGRAM
ST JOHNS BLUFF
MASTER PUMPING STATION

FLOOD & ASSOCIATES, INC.
DESIGN CONSULTANT
SVERDRUP & PARCEL AND ASSOCIATES, INC — GENERAL CONSULTANT

DETAILED BY J.A.H. SCALE AS SHOWN DATE SEPT. 1976
CHECKED BY L.T.H

FRAMING PLAN AT ELEV. 35.50

CONTR NO JS-40.7 PROJ NO 7316 SHEET NO 23 OF 42

SECTION (S-4 / 3)
SCALE 1½" = 1'-0"

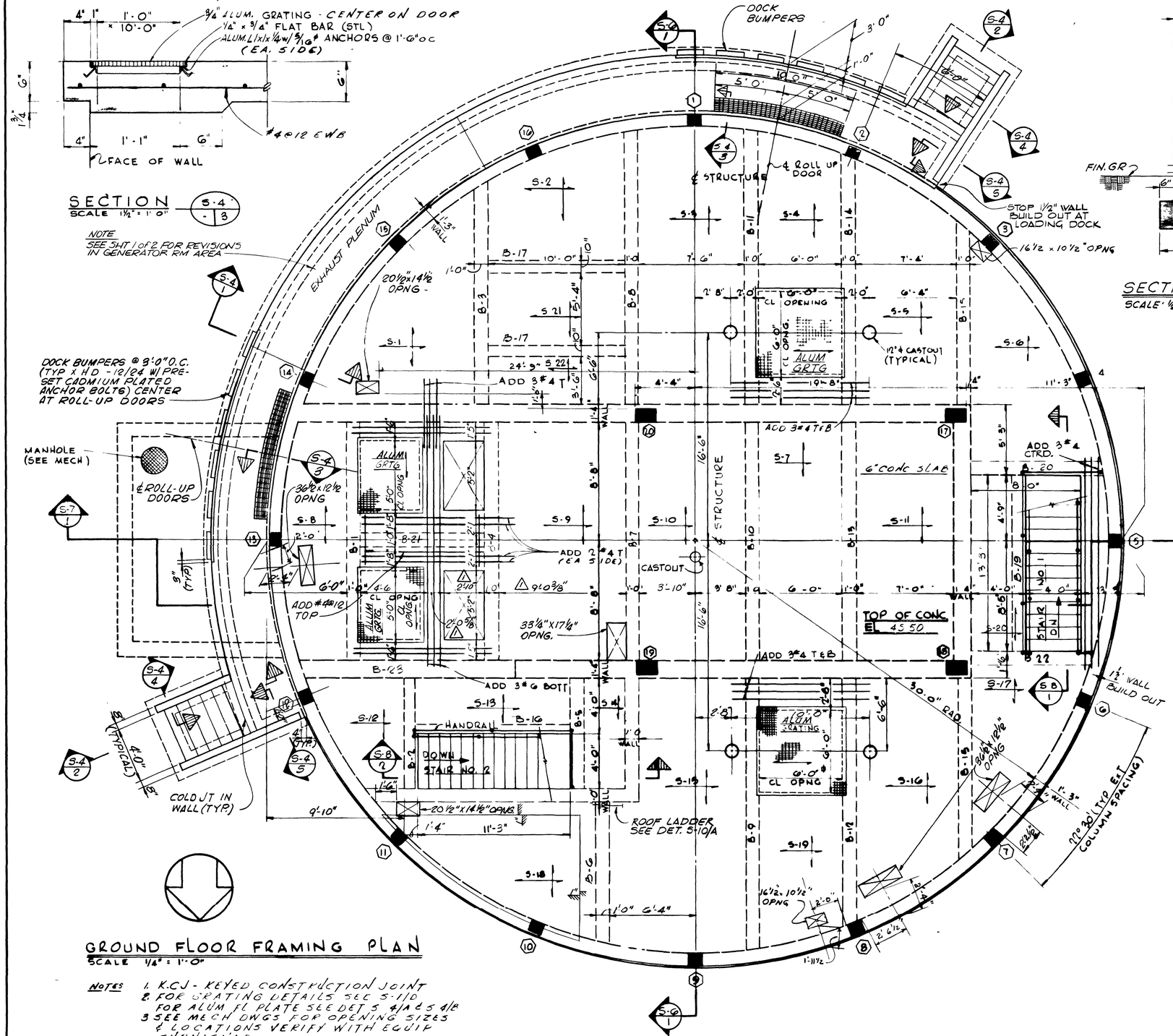

GROUND FLOOR FRAMING PLAN
SCALE 1/4" = 1'-0"

NOTES:
1. K.C.J. - KEYED CONSTRUCTION JOINT
2. FOR GRATING DETAILS SEE S-1/D
FOR ALUM FL PLATE SEE DET S 4/A & S 4/B
3. SEE MECH DWGS FOR OPENING SIZES & LOCATIONS VERIFY WITH EQUIP FURNISHED

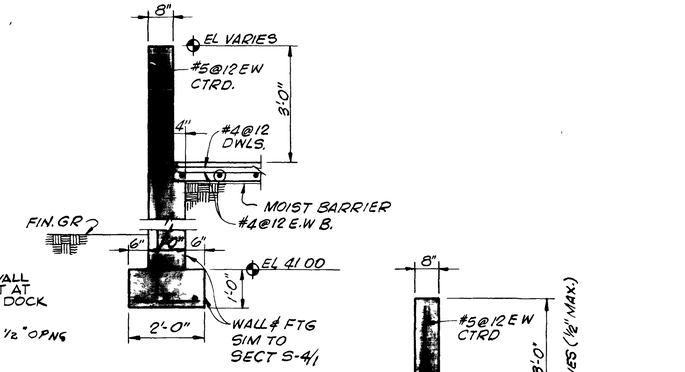

SECTION (S-4 / 4)
SCALE 1/2" = 1'-0"

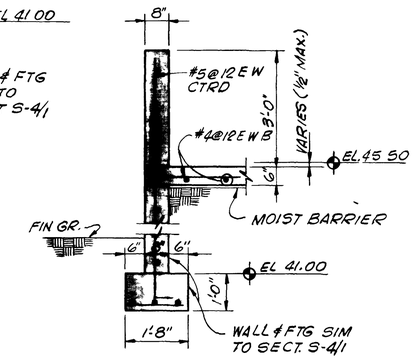

SECTION (S-4 / 5)
SCALE 1/2" = 1'-0"

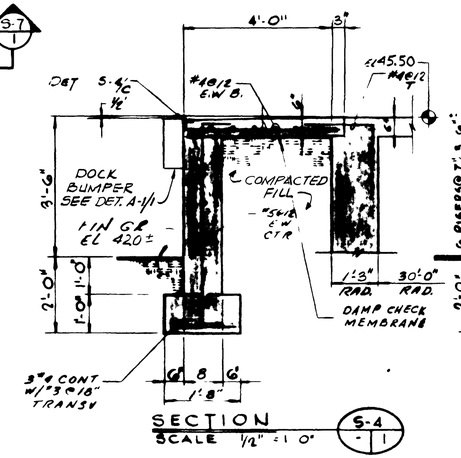

SECTION (S-4 / 1)
SCALE 1/2" = 1'-0"

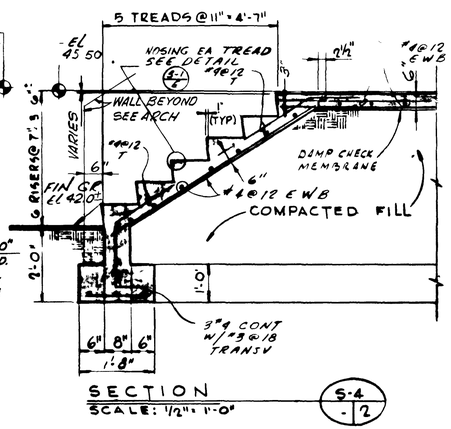

SECTION (S-4 / 2)
SCALE: 1/2" = 1'-0"

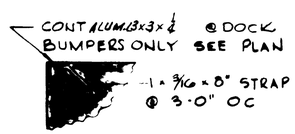

DETAIL (S-4 / C)
NO SCALE

AS BUILT
OCT. 1981

12918

S-4

NO	DESCRIPTION	BY	FIRM	DATE	S&P	DATE	PW	DATE
1	REVISED PER MECH BAD SCREEN FURNISHED	FWS	F&A	1-79	GEG	1-79	J.HH	1/1/79
	REVISIONS	SUBMITTAL			APPROVAL			

SUBMITTED BY James E. Crawford
REG ENGR FLA NO 6847 DATE 9/76
FLOOD & ASSOCIATES INC

APPROVAL RECOMMENDED BY Gary E. Johnson
REG ENGR FLA NO 14924 DATE 3 28 78
SVERDRUP & PARCEL AND ASSOCIATES INC

APPROVED BY ____
REG ENGR FLA NO ____ DATE ____
WATER AND SEWER DIVISION
AUTHORIZED BY Dale N. Hoff
REG ENGR FLA NO 9770 DATE 3/30/78
OFFICE OF DIRECTOR OF PUBLIC WORKS
CITY OF JACKSONVILLE FLORIDA

CITY OF JACKSONVILLE, FLORIDA

SEWERAGE IMPROVEMENT PROGRAM
ST. JOHNS BLUFF
MASTER PUMPING STATION

FLOOD & ASSOCIATES, INC.
DESIGN CONSULTANT
SVERDRUP & PARCEL AND ASSOCIATES, INC --- GENERAL CONSULTANT

DETAILED BY RNS
CHECKED BY LTH
SCALE AS SHOWN
DATE SEPT. 1976

GROUND FLOOR FRAMING PLAN

CONTR NO JS-40 7 | PROJ NO 7316 | SHEET NO 24 OF 42

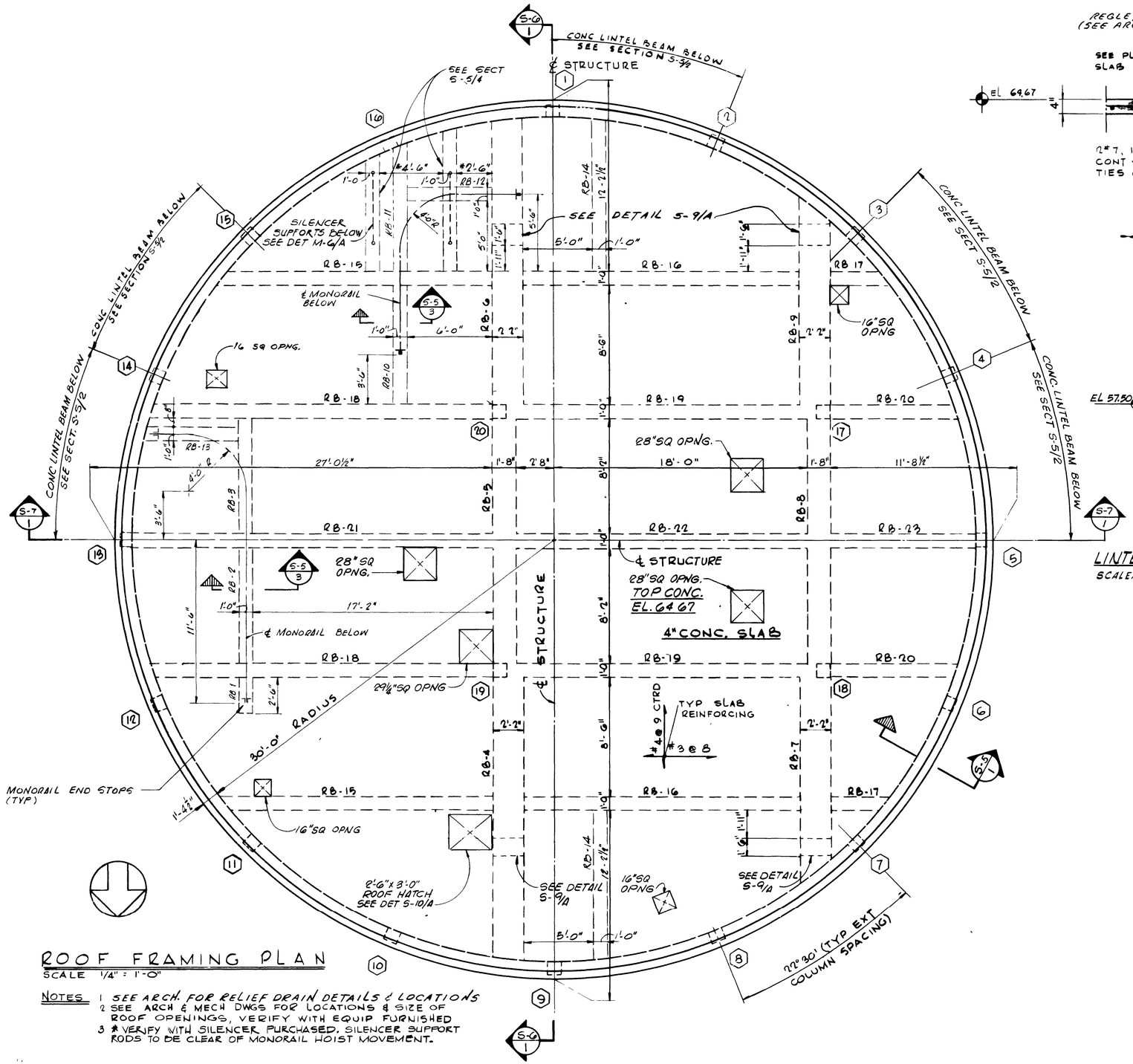

ROOF FRAMING PLAN

SCALE 1/4" = 1'-0"

NOTES
1. SEE ARCH. FOR RELIEF DRAIN DETAILS & LOCATIONS
2. SEE ARCH & MECH DWGS FOR LOCATIONS & SIZE OF ROOF OPENINGS, VERIFY WITH EQUIP FURNISHED
3. * VERIFY WITH SILENCER PURCHASED. SILENCER SUPPORT RODS TO BE CLEAR OF MONORAIL HOIST MOVEMENT.

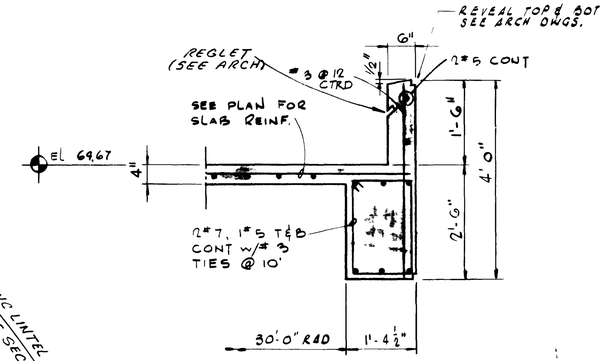

SECTION S-5 / 1

SC 3/4" = 1'-0"

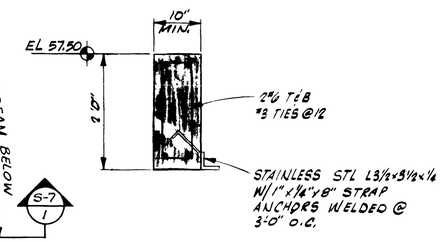

LINTEL SECTION S-5 / 2

SCALE: 3/4" = 1'-0"

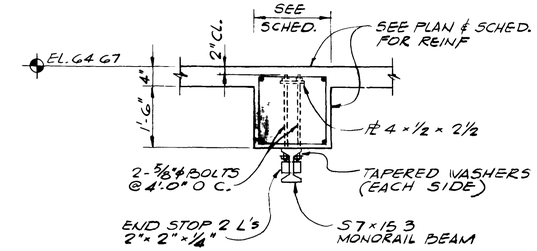

SECTION S-5 / 3

NO SCALE

NOTE: EACH MONORAIL DESIGNED FOR ONE 1 TON MANUAL HOIST.

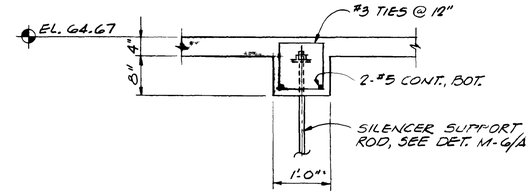

SECTION S-5 / 4

SCALE. 3/4" = 1'-0"

AS BUILT
OCT. 1981

12919

S-5

NO	DESCRIPTION	BY	FIRM	DATE	S&P	DATE	PW	DATE
	REVISIONS	SUBMITTAL			APPROVAL			

SUBMITTED BY James S. Crighton
REG ENGR FLA NO 6847 DATE 9/76
FLOOD & ASSOCIATES INC
APPROVAL RECOMMENDED BY
REG ENGR FLA NO 14824 DATE 3 28 78
SVERDRUP & PARCEL AND ASSOCIATES INC

APPROVED BY ---
REG ENGR FLA NO DATE
WATE AND SEWER DIVISION
AUTHORIZED BY
REG ENGR FLA NO 14770 DATE 3-30-78
OFFICE OF DIRECTOR OF PUBLIC WORKS
CITY OF JACKSONVILLE FLORIDA

CITY OF JACKSONVILLE, FLORIDA

SEWERAGE IMPROVEMENT PROGRAM
ST. JOHNS BLUFF
MASTER PUMPING STATION

FLOOD & ASSOCIATES, INC
DESIGN CONSULTANT
SVERDRUP & PARCEL AND ASSOCIATES, INC --- GENERAL CONSULTANT

DETAILED BY T.A.L. SCALE AS SHOWN DATE SEPT-1976
CHECKED BY LTH.

ROOF FRAMING PLAN

CONTR NO JS-40.7 PROJ NO 7316 SHEET NO 25 OF 42

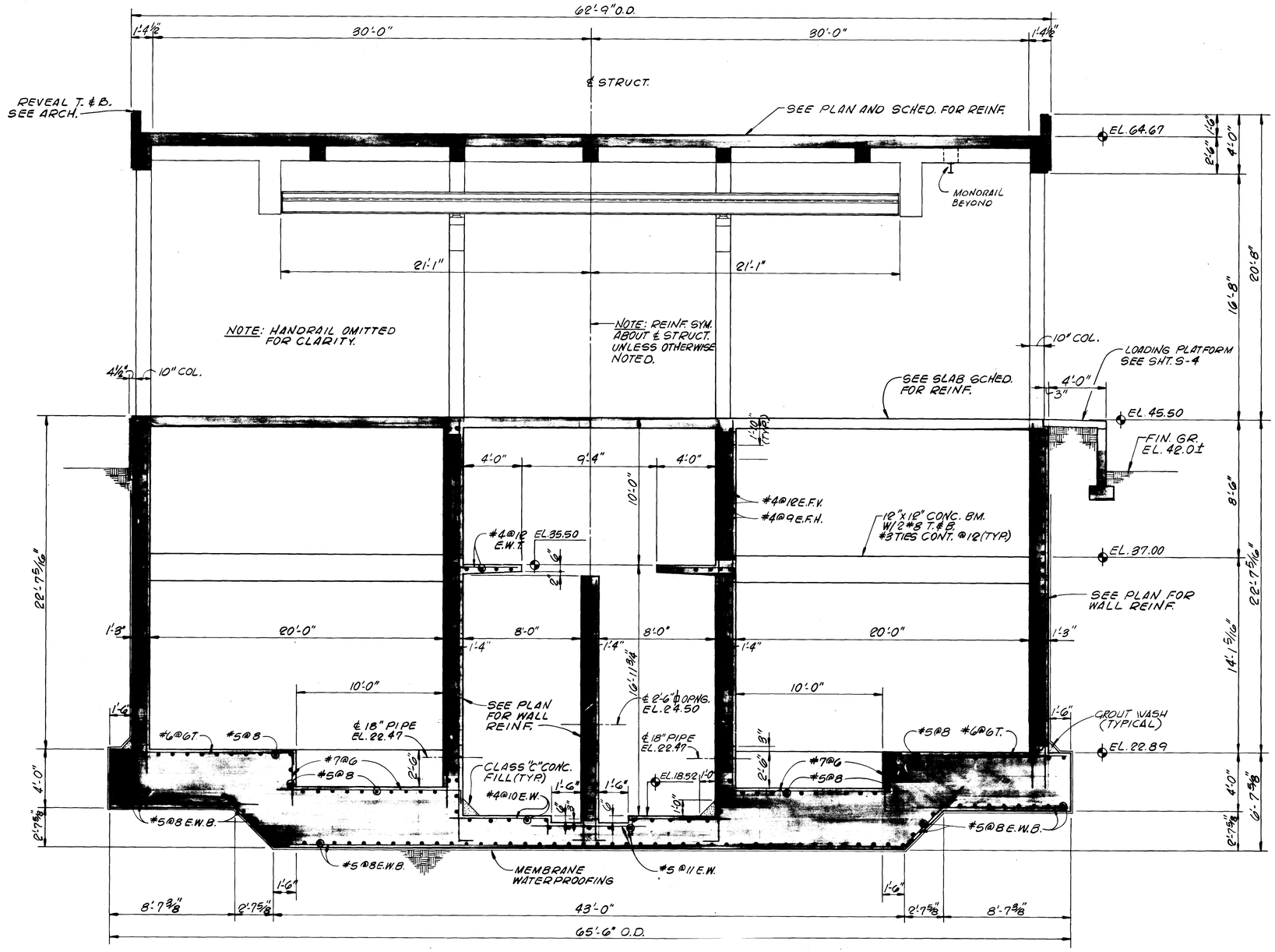

SECTION S-6 / S-2 1
SCALE: 1/4" = 1'-0"

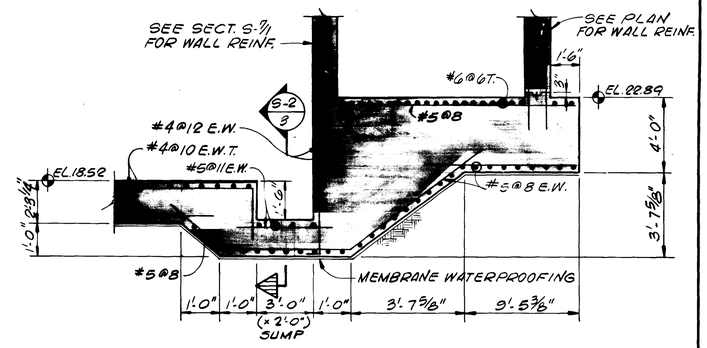

SECTION S-6 / S-2 4
SCALE: 1/4" = 1'-0"

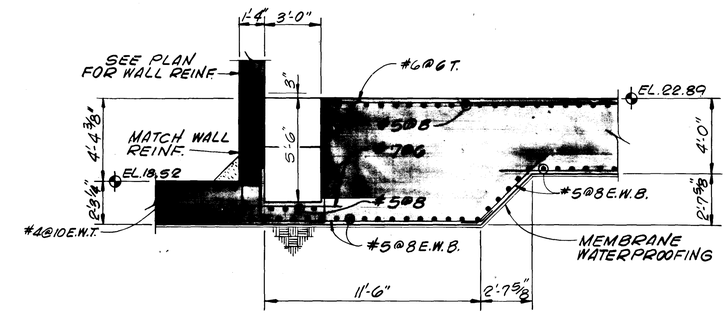

SECTION S-6 / S-2 2
SCALE: 1/4" = 1'-0"

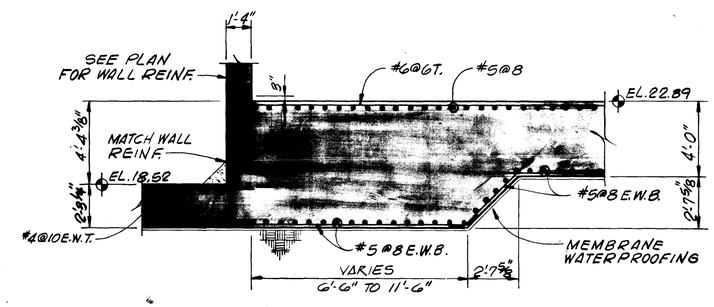

SECTION S-6 / S-2 3
SCALE: 1/4" = 1'-0"

AS BUILT
OCT. 1981

S-6

12920

NO.	DESCRIPTION	BY	FIRM	DATE	S&P	DATE	PW	DATE
	REVISIONS	SUBMITTAL			APPROVAL			

SUBMITTED BY: James S. English
REG. ENGR. FLA. NO. 6847 DATE 9/76
FLOOD & ASSOCIATES, INC.

APPROVAL RECOMMENDED BY: Gregory E. Shirley
REG. ENGR. FLA. NO. 14824 DATE 3-22-78
SVERDRUP & PARCEL AND ASSOCIATES, INC.

APPROVED BY:
REG. ENGR. FLA. NO. _____ DATE _____
WATER AND SEWER DIVISION
AUTHORIZED BY: [illegible]
REG. ENGR. FLA. NO. 14220 DATE 3/31/78
OFFICE OF DIRECTOR OF PUBLIC WORKS
CITY OF JACKSONVILLE, FLORIDA

CITY OF JACKSONVILLE, FLORIDA

SEWERAGE IMPROVEMENT PROGRAM
ST. JOHNS BLUFF
MASTER PUMPING STATION

FLOOD & ASSOCIATES, INC.
DESIGN CONSULTANT
SVERDRUP & PARCEL AND ASSOCIATES, INC. — GENERAL CONSULTANT

DETAILED BY: R.N.S. SCALE AS SHOWN DATE SEPT. 1976
CHECKED BY: L.T.H.

SECTIONS

CONTR. NO. JS-40.7 PROJ. NO. 7316 SHEET NO. 26 OF 42

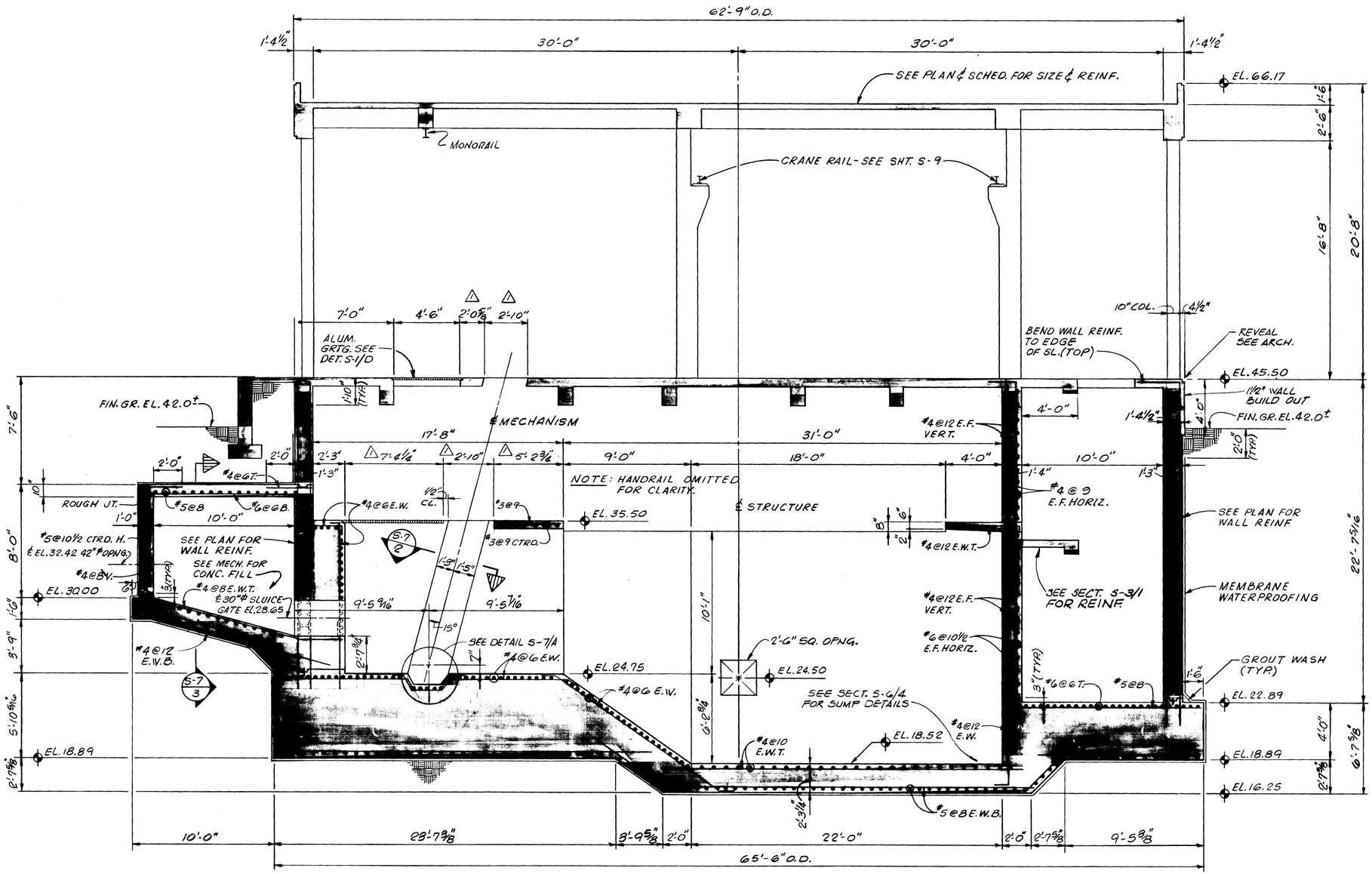

SECTION S-7 / S-2 1
SCALE: 1/4" = 1'-0"

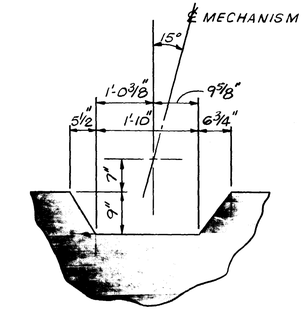

DETAIL S-7 / - A
SCALE: 3/4" = 1'-0"

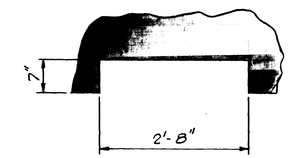

SECTION S-7 / - 2 SCREEN RECESS
SCALE: 3/4" = 1'-0"

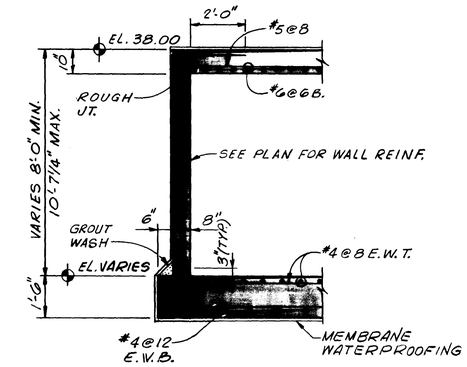

SECTION S-7 / S-2 3
SCALE: 3/8" = 1'-0"

AS BUILT
OCT. 1981

S-7

12921

NO.	DESCRIPTION	BY	FIRM	DATE	S&P	DATE	PW	DATE
1	REVISED PER MECH. BAR SCREEN FURNISHED	F.W.S.	F&A	1-79	GEG	1/79	LHH	1/19/79
	REVISIONS	SUBMITTAL			APPROVAL			

SUBMITTED BY: James S. Engle
REG. ENGR. FLA. NO. 6847 DATE 9/76
FLOOD & ASSOCIATES, INC.
APPROVAL RECOMMENDED BY: George Stevens
REG. ENGR. FLA. NO. 14824 DATE 3-28-79
SVERDRUP & PARCEL AND ASSOCIATES, Inc.

APPROVED BY:
REG. ENGR. FLA. NO. ____ DATE ____
WATER AND SEWER DIVISION
AUTHORIZED BY: Jack H. Hoff
REG. ENGR. FLA. NO. 4320 DATE 3/30/79
OFFICE OF DIRECTOR OF PUBLIC WORKS
CITY OF JACKSONVILLE, FLORIDA

CITY OF JACKSONVILLE, FLORIDA

SEWERAGE IMPROVEMENT PROGRAM
ST. JOHNS BLUFF
MASTER PUMPING STATION

FLOOD & ASSOCIATES, INC.
DESIGN CONSULTANT
SVERDRUP & PARCEL AND ASSOCIATES, Inc. — GENERAL CONSULTANT
DETAILED BY: R.N.S. SCALE AS SHOWN DATE SEPT. 1976
CHECKED BY: L.T.H.

SECTIONS

CONTR. NO. JS-40.7 PROJ. NO. 7316 SHEET NO. 27 OF 42

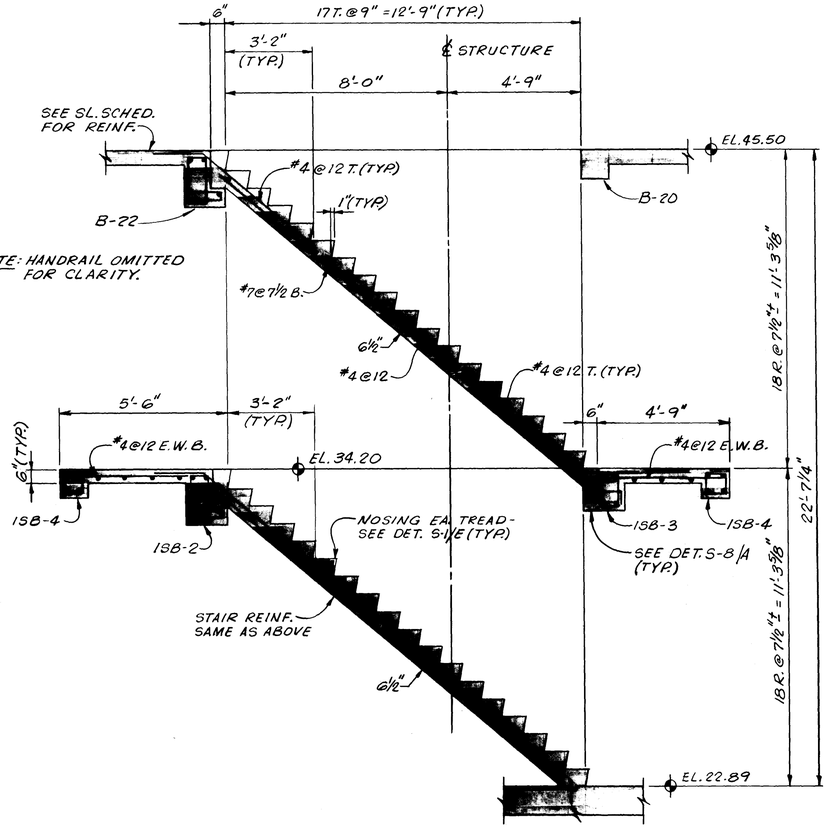

SECTION (S-8 / S-2 | 1) STAIR NO. 1

SCALE: 3/8" = 1'-0"

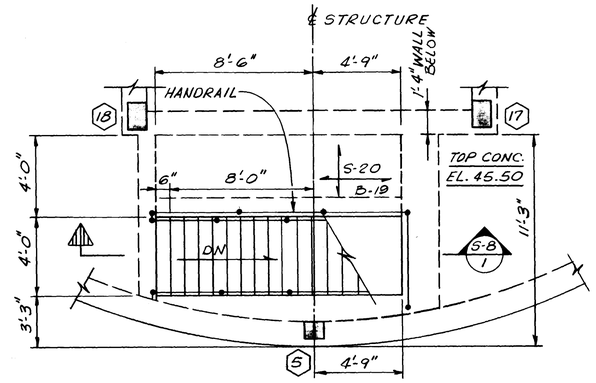

STAIR NO. 1

PLAN AT EL. 45.50

SCALE: 1/4" = 1'-0"

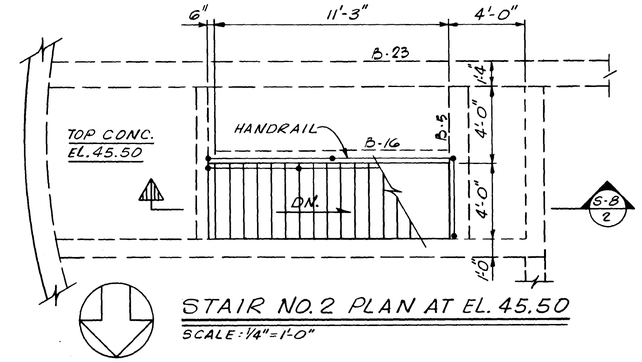

STAIR NO. 2 PLAN AT EL. 45.50

SCALE: 1/4" = 1'-0"

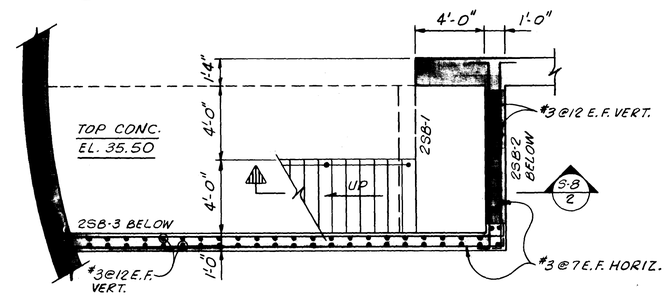

STAIR NO. 2 PLAN AT EL. 35.50

SCALE: 1/4" = 1'-0"

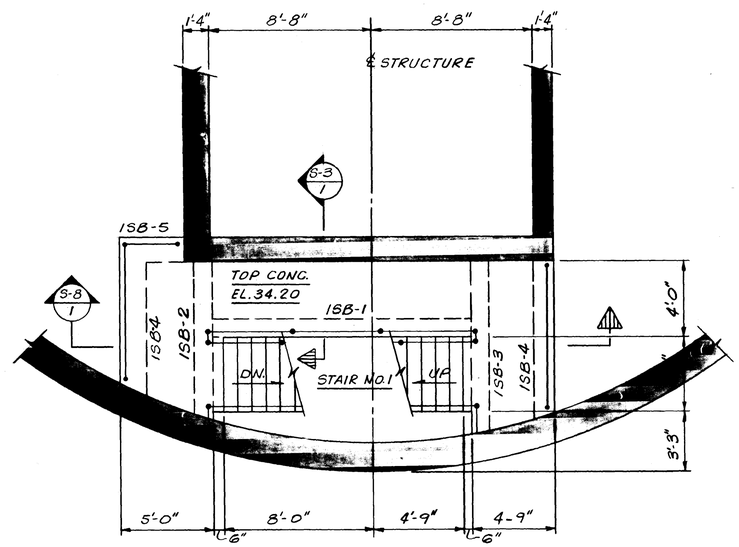

STAIR NO. 1

PLAN AT EL. 34.20

SCALE: 1/4" = 1'-0"

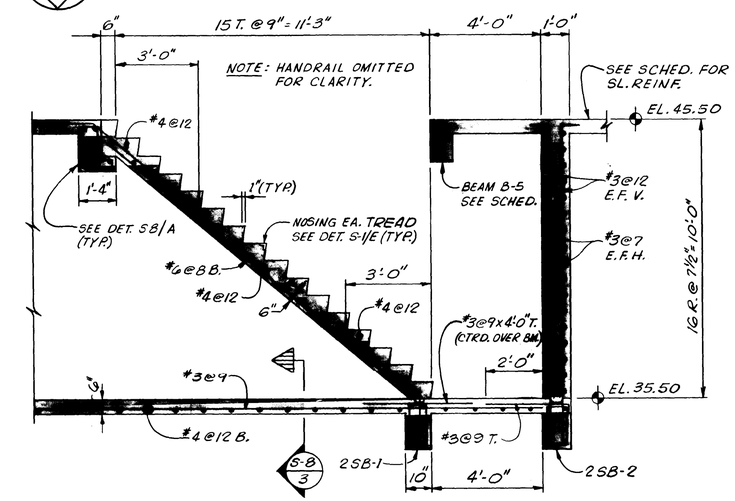

SECTION (S-8 / S-3 | 2) STAIR NO. 2

SCALE: 3/8" = 1'-0"

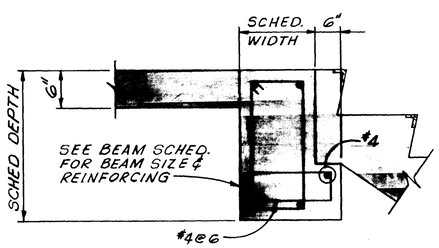

DETAIL (S-8 / — | A)

SCALE: 1" = 1'-0"

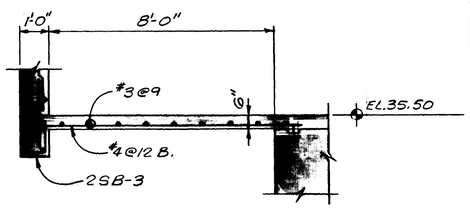

SECTION (S-8 / — | 3)

SCALE: 3/8" = 1'-0"

AS BUILT

OCT. 1981

12922

S-8

NO.	DESCRIPTION	BY	FIRM	DATE	S&P	DATE	PW	DATE
	REVISIONS	SUBMITTAL			APPROVAL			

SUBMITTED BY: James S. English
REG. ENGR. FLA. NO. 6847 DATE 9/76
FLOOD & ASSOCIATES, INC.

APPROVAL RECOMMENDED BY: Charles E. Chrisman
REG. ENGR. FLA. NO. 14824 DATE 3-28-78
SVERDRUP & PARCEL AND ASSOCIATES, INC.

APPROVED BY:
REG. ENGR. FLA. NO. DATE
WATER AND SEWER DIVISION
AUTHORIZED BY: Jack R. Lewis
REG. ENGR. FLA. NO. 04220 DATE 3-30-78
OFFICE OF DIRECTOR OF PUBLIC WORKS
CITY OF JACKSONVILLE, FLORIDA

CITY OF JACKSONVILLE, FLORIDA

SEWERAGE IMPROVEMENT PROGRAM

ST. JOHNS BLUFF

MASTER PUMPING STATION

FLOOD & ASSOCIATES, INC.
DESIGN CONSULTANT

SVERDRUP & PARCEL AND ASSOCIATES, Inc. — GENERAL CONSULTANT

DETAILED BY: J.A.B. SCALE AS SHOWN DATE SEPT. 1976
CHECKED BY: L.T.H.

STAIR PLANS & SECTIONS

CONTR. NO. JS-40.7 PROJ. NO. 7316 SHEET NO. 28 OF 42

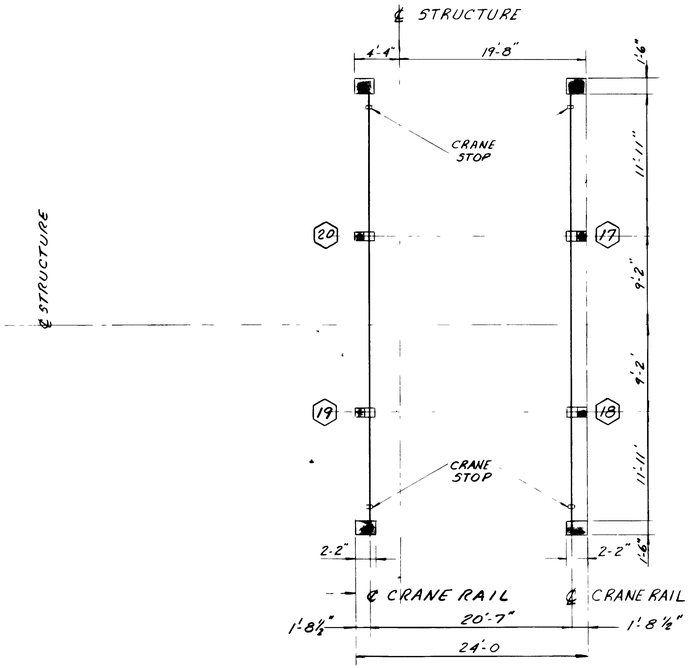

PLAN (S-9 / -1) CRANE RAIL
(TOP CRANE RAIL EL 60 51)
SCALE 1/8" = 1'-0"

NOTE: CRANE RAIL SYSTEM IS DESIGNED FOR 1-5 TON MANUAL BRIDGE CRANE.

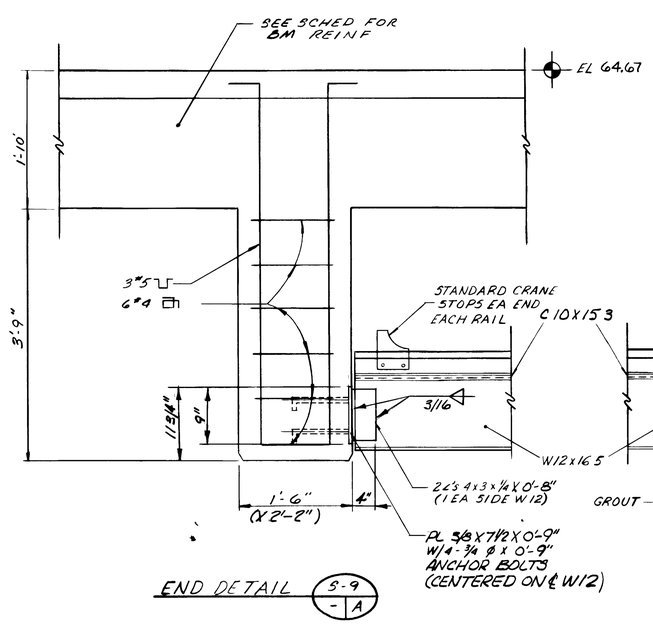

END DETAIL (S-9 / -A)

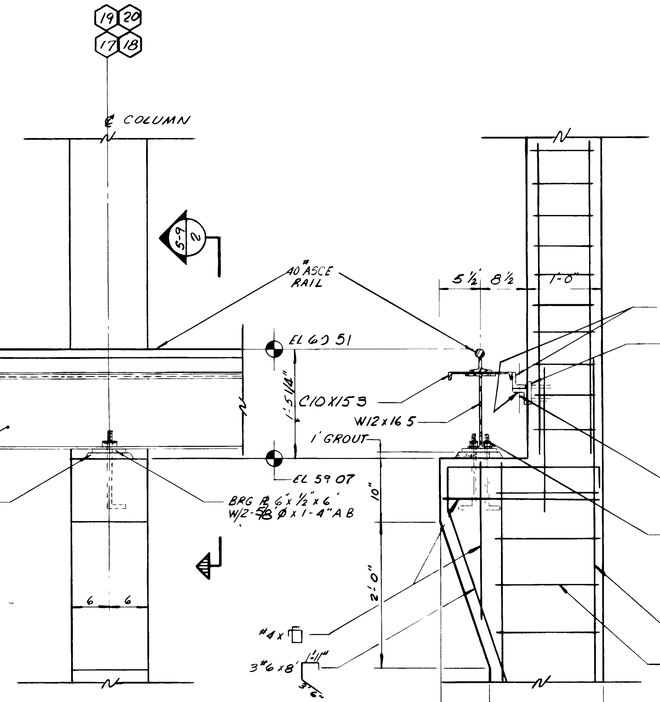

ELEVATION (S-9 / -B) INTERIOR COLUMN

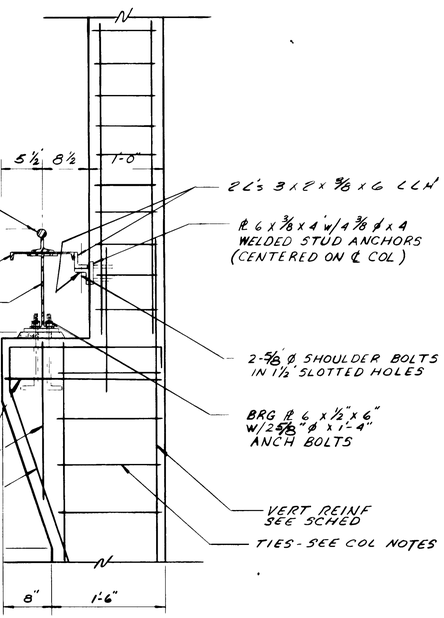

SECTION (S-9 / -2)

DETAIL (S-9 / -C) CRANE RAIL & SUPPORTS
SCALE 1" = 1'-0"

NOTES
1. FABRICATE CRANE BEAMS SO THAT C10X15.3 & W12 x 16.5 ACT INTEGRALLY COMPOSITE SECTION TO BE WELDED IN SHOP PER APPROVED SHOP DWG'S
2. CRANE RAIL SHALL BE INSTALLED IN ACCORDANCE WITH AISC MANUAL OF STEEL CONSTRUCTION & MFR'S RECOMMENDATIONS. SPLICES SHALL BE BOLTED WITH TIGHT JOINT FASTENINGS. SHALL BE BY "FIXED" TYPE RAIL CLAMPS, PAIRED, PER MFR'S RECOMMENDATIONS, 24" O.C. MAX.

AS BUILT
OCT 1981

COLUMN NOTES
1. SEE PLAN FOR ORIENTATION
2. ALL COLUMN TIES TO BE IN ACCORDANCE WITH AC I MANUAL OF STANDARD PRACTICE, 315 (LATEST EDITION)
3. EACH COLUMN TIE TO CONTAIN AT LEAST FOUR (4) REINFORCING BARS.
4. ENDS OF ALL TIES TO HAVE MINIMUM 135° BEND
5. VERTICAL COLUMN REINFORCING #7 AND SMALLER SHALL HAVE #2 TIES @ 12 #8 BARS AND LARGER SHALL HAVE #3 TIES @ 12.
6. WHERE COLUMN IS PART OF CONCRETE WALL, EXTEND COLUMN REINFORCING AND TIES THRU WALL
7. POUR COLUMNS INTEGRAL WITH CONCRETE WALLS
8. TERMINATE DISCONTINUOUS VERTICAL REINFORCING WITH A 90° HOOK AND 1'-0 HORIZONTAL EXTENSION
9. DOWEL COLUMNS INTO WALL OR SLAB BELOW. DOWELS TO MATCH VERT REINF

COLUMN SCHEDULE

COLUMN NUMBERS	1 THRU 16		17, 18, 19, 20	21
EL TOP OF ROOF BEAM	66.67		66.67	
SIZE OR TYPE	10 x 10		12 x 12	
VERTICAL REINFORCING	4 #6		4 #6	
EL TOP OF HAUNCH			59.07	
SIZE OR TYPE			12 x 18	
VERTICAL REINFORCING			4 #7	
EL TOP OF GROUND FL SLAB	45.50		45.50	
REMARKS			SEE DET S-9/2	SEE PLAN SHT S 2

12923

S-9

NO	DESCRIPTION	BY	FIRM	DATE	S&P	DATE	PW	DATE
	REVISIONS	SUBMITTAL			APPROVAL			

SUBMITTED BY James D. English
REG ENGR FLA NO 6847 DATE 9/76
FLOOD & ASSOCIATES INC
APPROVAL RECOMMENDED BY
REG ENGR FLA NO 14824 DATE 3-20-78
SVERDRUP & PARCEL AND ASSOCIATES INC

APPROVED BY
REG ENGR FLA NO ____ DATE ____
WATER AND SEWER DIVISION
AUTHORIZED BY
REG ENGR FLA NO 4270 DATE 3/30/78
OFFICE OF DIRECTOR OF PUBLIC WORKS
CITY OF JACKSONVILLE FLORIDA

CITY OF JACKSONVILLE, FLORIDA
SEWERAGE IMPROVEMENT PROGRAM
ST. JOHNS BLUFF
MASTER PUMPING STATION

FLOOD & ASSOCIATES, INC.
DESIGN CONSULTANT
SVERDRUP & PARCEL AND ASSOCIATES, INC --- GENERAL CONSULTANT
DETAILED BY T.A.H. SCALE AS SHOWN DATE SEPT. 1976
CHECKED BY L.T.H.

CRANE RAIL SYSTEM
COLUMN SCHEDULE

CONTR NO JS-40.7 PROJ NO 7316 SHEET NO 29 OF 42

BEAM SCHEDULE

MARK	SIZE W	SIZE D	REINFORCING A	REINFORCING B	REINFORCING C	REINFORCING D	REINFORCING E	REINFORCING F	TIES SIZE	TIES SPACING EACH END	REMARKS

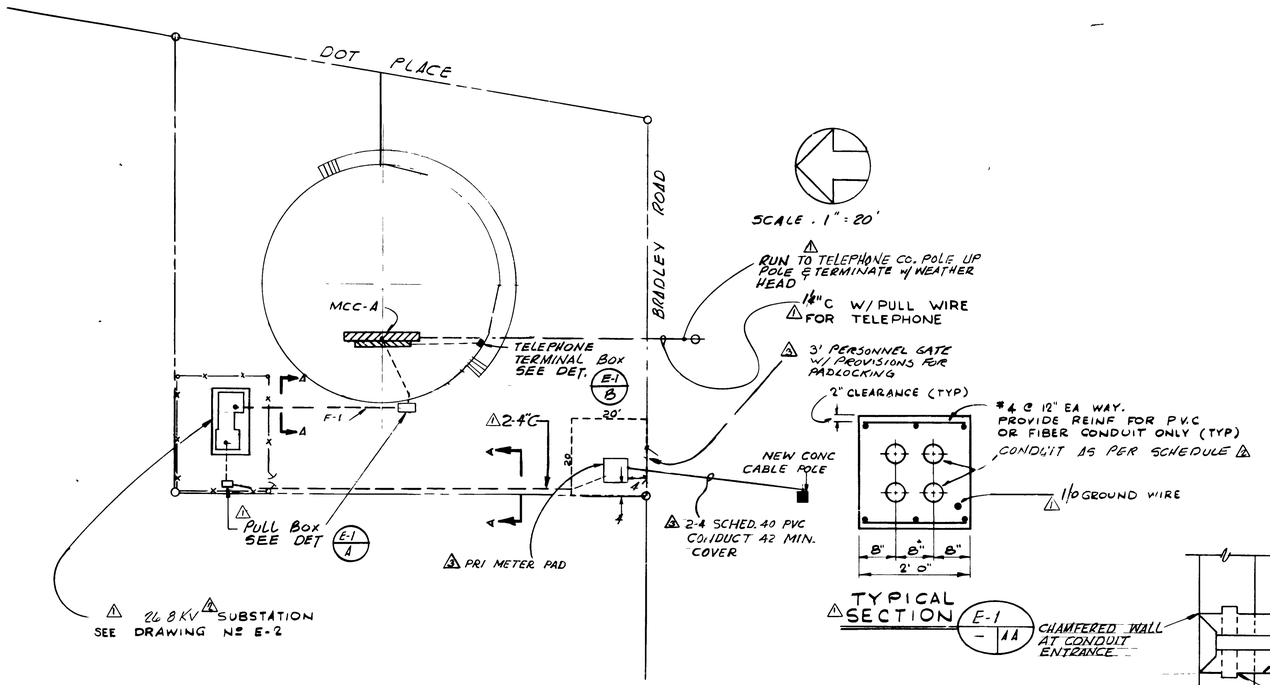

PLOT PLAN

ST. JOHNS BLUFF MASTER PUMPING STATION

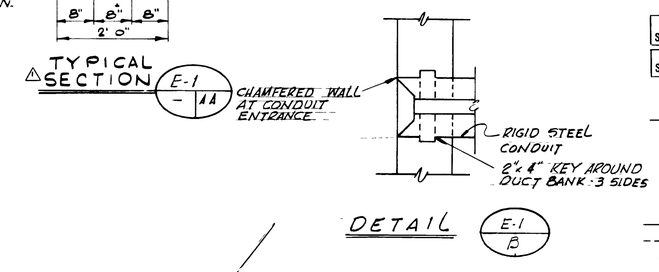

TYPICAL SECTION E-1 / 1A

DETAIL E-1 / B

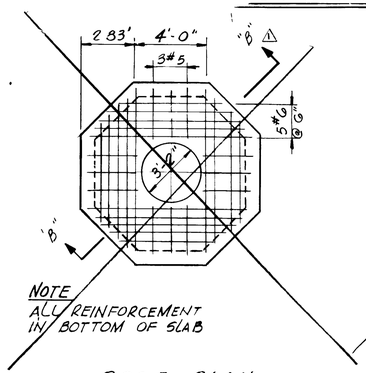

ROOF PLAN

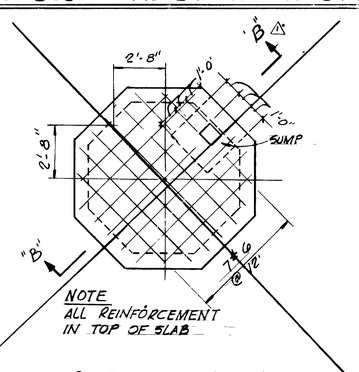

BOTTOM PLAN

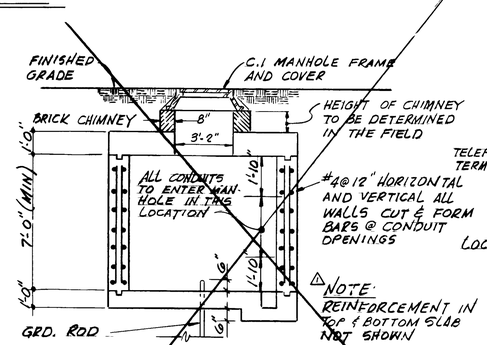

SECTION E-1 / B-B

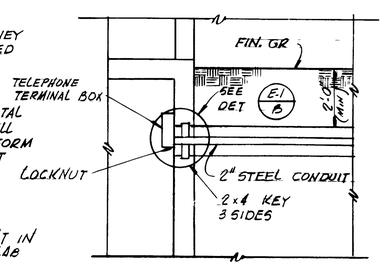

TYPICAL TELEPHONE CONDUIT ENTRANCE TO BUILDING

TYPICAL PULLBOX MANHOLE DETAILS E-1 / A

NOT USED

LEGEND

AA	AUTOMATIC ALTERNATOR HEALY - RUFF MODEL 7 AUTO-TROL
AX	AUXILLIARY RELAY
HOA	HAND OFF AUTOMATIC SWITCH
LW	LOW LEVEL CUT OFF DEVICE CONTACT IN LIQUID LEVEL CONTROL
PB	START-STOP SWITCH, MOMENTARY CONTACT TYPE
PBM	START-STOP SWITCH, MAINTAINING CONTACT TYPE
PC	PILOT CONTACT DEVICE CONTACT IN LIQUID LEVEL CONTROL
S	SELECTOR SWITCH (MANUAL ALTERNATOR)
"SO"	SAFE OFF SWITCH WITH LOCK OUT LATCH
SV	SOLENOID VALVE
TS	TIME SWITCH
AC	AMPLI SPEED CONTROL UNIT
A	AMMETER
AS	AMMETER SWITCH
F	FREQUENCY METER
FS	FLOAT SWITCH
H	ELASPED TIME INDICATOR (HOURS OF OPERATION)
HS	HAND SPEED CONTROL RHEOSTAT
SI	SPEED INDICATOR
TD	TIME DELAY RELAY ALEN BRADLEY ADJUSTABLE 0 TO 12 MIN
V	VOLTMETER
VS	VOLTMETER SWITCH
W	INDICATING WATT METER
●	INDICATES LIGHTS R=RED (STOP) G=GREEN (RUNNING) B=BLUE (AS NOTED) W=WHITE (AS NOTED) A=AMBER (ALARM)
R	INDICATES ASSOCIATED DEVICE REMOTE FROM CONTROL CENTER (USUALLY AT MOTOR)
P	INDICATES ASSOCIATED DEVICE ON INSTRUMENTATION CONTROL PANEL
M	INDICATES ASSOCIATED DEVICE IN MOTOR CONTROL CENTER
P	PRESSURE SWITCH
PBML	SAME AS PBM WITH LOCKING DEVICE
PBL	SAME AS PB WITH LOCKING DEVICE
B	COMMON ALARM IN INSTRUMENTATION CONTROL PANEL (ANNUNCIATOR)
K	KEY INTERLOCK -MECH & ELECTRICALLY
LS	LIMIT SWITCH
100/70	CIRCUIT BREAKER MOLDED CASE THERMAL MAGNETIC TRIP, UPPER NUMERAL INDICATES FRAME SIZE, LOWER INDICATES TRIP SETTING
FVNR SIZE 1	FULL VOLTAGE, NON-REVERSING MAGNETIC MOTOR STARTER NEMA SIZE INDICATED (PROVIDE STARTERS, C/B, & INDICATOR LIGHTS FOR FUTURE EQUIPMENT)
RVNR SIZE 4	REDUCED VOLTAGE, NON-REVERSING AUTO TRANSFORMER TYPE MOTOR STARTER NEMA SIZE INDICATED
	POWER TRANSFORMER
	POTENTIAL TRANSFORMER
	CURRENT TRANSFORMER
10	MOTOR NUMERAL INDICATES HORSEPOWER
	CONDUIT UP AND DOWN
	CONDUIT RUNS CONCEALED
	CONDUIT RUNS EXPOSED
	CONDUIT TURNING UP OR TOWARD OBSERVER
	CONDUIT TURNING DOWN OR AWAY FROM OBSERVER
	HOME RUNS TO PANEL NUMBER OF ARROWS DENOTES NUMBER OF CIRCUITS CROSS MARKS INDICATES NUMBER OF CONDUCTORS NO MARKS INDICATES TWO CONDUCTORS ALL LIGHTING CIRCUIT WIRING SHALL BE NO 12 AWG UNLESS OTHERWISE NOTED
A d 2	CEILING MOUNTED INCANDESCENT FIXTURES, TYPE "A" CONNECTED TO CIRCUIT 2 AND SWITCH "d" CEILING MOUNTED FLOURESCENT FIXTURES
	WALL MOUNTED INCANDESCENT FIXTURES
X 8	WALL RECEPTACLE CONNECTED TO CIRCUIT 8, DUPLEX GROUNDING TYPE UNLESS OTHERWISE NOTED WATERTIGHT
	EXPLOSION PROOF INDICATED BY "X"
	FLOOD LIGHTING FIXTURE
Sa	SINGLE POLE SWITCH, CONTROLS FIXTURES MARKED "a"
Sa WP	SINGLE POLE SWITCH, WEATHERPROOF CONTROLS FIXTURES MARKED "a"
SaEX	SINGLE POLE SWITCH, EXPLOSION PROOF CONTROLS FIXTURES MARKED "a"
	PANEL BOARD 277/480V 3Ø 4W
△	PANEL BOARD 120/208 V 3Ø 4W
PB	START STOP SWITCH MOMENTARY CONTACT TYPE
PBM	START STOP SWITCH MAINTAINING CONTACT TYPE
HOA	HANDS OFF AUTOMATIC SELECTOR SWITCH
SO	SAFE-OFF SWITCH WITH LOCKOUT LATCH
ES	EMERGENCY STOP SWITCH
MS	MANUAL MOTOR STARTER
P	WIRING CONCEALED IN SLAB OR BELOW GRADE
	AREA FIXTURE REVERE ISLAND LIGHT
	TELEPHONE OUTLET PROVIDE 1" EMPTY CONDUIT FROM EACH OUTLET
	SPECIAL PURPOSE OUTLET
P	PRIMARY CABLE AND CONDUIT
	MOTOR DRIVEN HORN
	STREET LIGHT, WESTINGHOUSE "OV-25" WITH BUILT IN FUSED BALLAST 480 VOLT-400 WATT H33-IGL-CIE MERCURY LAMP ALL WIRING AS INDICATED ON SHEET E-1
P60	P60 INDICATES CONDUIT NUMBER - SEE CONDUIT AND CABLE SCHEDULES
T	TELEPHONE CONDUIT
	CONDUIT IN DUCT BANK OR BELOW GRADE
T	THERMOSTAT - 4#12 - ¾"C. TO CONTROLLER
TC	TIME CLOCK

SM	MANUAL MOTOR STARTER
SML	SAME AS SM WITH LOCKOUT
	COMB MOTOR STARTER
CV	CHECK VALVE
J	JUNCTION BOX
△ EM	EMERGENCY POWER LOCKOUT CONTACT
△ SW	SEAL WATER FLOW SWITCH CONTACT

12925

AS BUILT
OCT 1981

E-1

NO	DESCRIPTION	BY	FIRM	DATE	SBD	DATE	PW	DATE
3	REVISIONS PER JEA REQUIREMENTS	DL	F&A	3/79		3/80		
2	ADDENDUM Nº 1	DL	F&A	5/78		5/78		
1	PRE-BID REVISION	JB	F&A	9/77		3/78		

REVISIONS — SUBMITTAL — APPROVAL

SUBMITTED BY: REG ENGR FLA NO 6874 DATE 9-76 — FLOOD & ASSOCIATES INC

APPROVAL RECOMMENDED BY: REG ENGR FLA NO 14874 DATE 3 28 78 — SVERDRUP & PARCEL AND ASSOCIATES INC

APPROVED BY: REG ENGR FLA NO ____ DATE ____ WATER AND SEWER DIVISION

AUTHORIZED BY: REG ENGR FLA NO 9970 DATE 3/30/78 — OFFICE OF DIRECTOR OF PUBLIC WORKS, CITY OF JACKSONVILLE FLORIDA

CITY OF JACKSONVILLE, FLORIDA

SEWERAGE IMPROVEMENT PROGRAM
ST. JOHNS BLUFF
MASTER PUMPING STATION

FLOOD & ASSOCIATES, INC.
DESIGN CONSULTANT
SVERDRUP & PARCEL AND ASSOCIATES, Inc — GENERAL CONSULTANT

DETAILED BY SBD — SCALE AS SHOWN — DATE SEPT 1976
CHECKED BY BAB

SITE PLAN AND LEGEND

CONTR NO JS-40 7 — PROJ NO 7316 — SHEET NO 31 OF 42

K&E 18 1253 7-73 MC 1227-

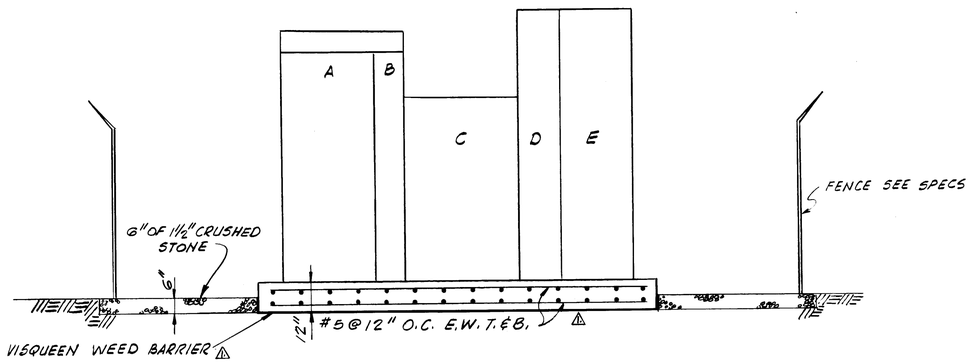

ELEVATION

SCALE: 3/8" = 1'-0"

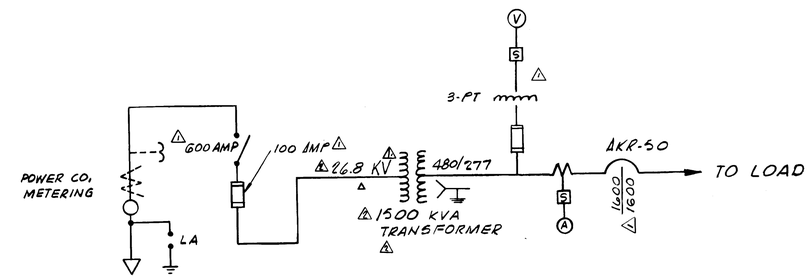

SINGLE LINE DIAGRAM

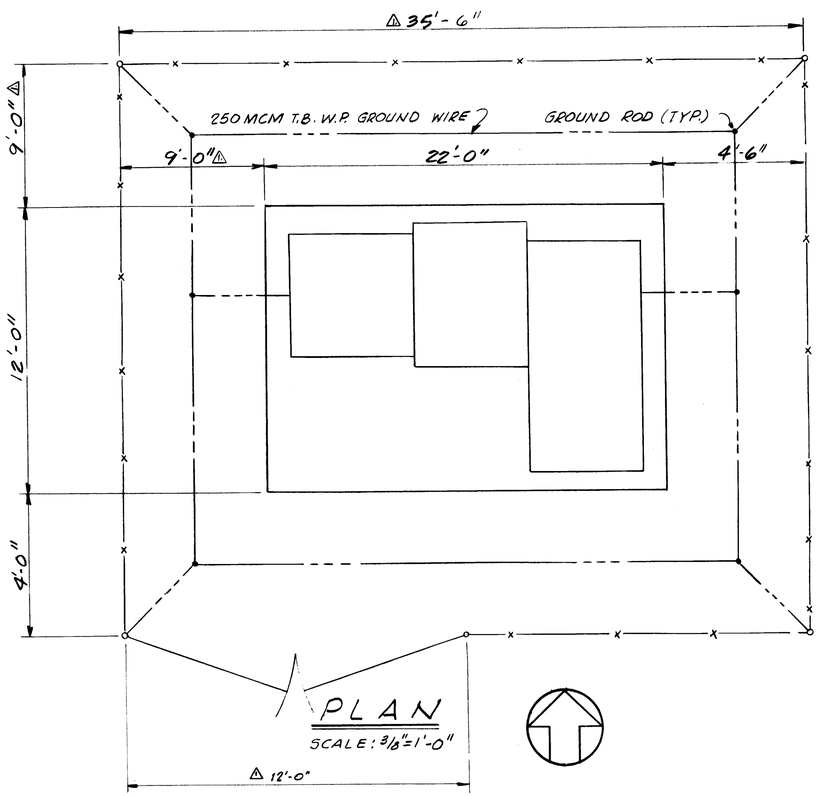

PLAN

SCALE: 3/8" = 1'-0"

ITEM NO.	DESCRIPTION
A	POWER CO. METERING & PRIMARY SWITCH
B	TRANSITION CABINET
C	1500 KVA TRANSFORMER
D	TRANSITION CABINET
E	FEEDER CIRCUIT BREAKER 1600 AMP.

AS BUILT
OCT., 1981

12926

E-2

NO.	DESCRIPTION	BY	FIRM	DATE	S&P	DATE	PW	DATE
2	ADDENDUM No 1	DL	F&A	5/78		5/78	J.H.H.	5/17/78
1	PRE-BID REVISIONS	JC	F&A	7/77		3/78	J.H.H.	3/31/78
	REVISIONS	SUBMITTAL			APPROVAL			

SUBMITTED BY: James S. Eyler
REG. ENGR. FLA. NO. 6847 DATE 9/76
FLOOD & ASSOCIATES, INC.
APPROVAL RECOMMENDED BY: George E. Lohrum
REG. ENGR. FLA. NO. 14870 DATE 3-28-78
SVERDRUP & PARCEL AND ASSOCIATES, Inc.

APPROVED BY:
REG. ENGR. FLA. NO. ____ DATE ____
WATER AND SEWER DIVISION
AUTHORIZED BY: Dale A. Mitchell
REG. ENGR. FLA. NO. 14270 DATE 3/30/78
OFFICE OF DIRECTOR OF PUBLIC WORKS
CITY OF JACKSONVILLE, FLORIDA

CITY OF JACKSONVILLE, FLORIDA

SEWERAGE IMPROVEMENT PROGRAM
ST. JOHNS BLUFF
MASTER PUMPING STATION

FLOOD & ASSOCIATES, INC.
DESIGN CONSULTANT
SVERDRUP & PARCEL AND ASSOCIATES, Inc. --- GENERAL CONSULTANT

DETAILED BY: MF | SCALE SHOWN | DATE SEPT. 1976
CHECKED BY: BAB

ELECTRIC SUB-STATION / PLAN ELEVATION
SINGLE LINE DIAGRAM

CONTR. NO. JS-40.7 | PROJ. NO. 7316 | SHEET NO. 32 OF 42

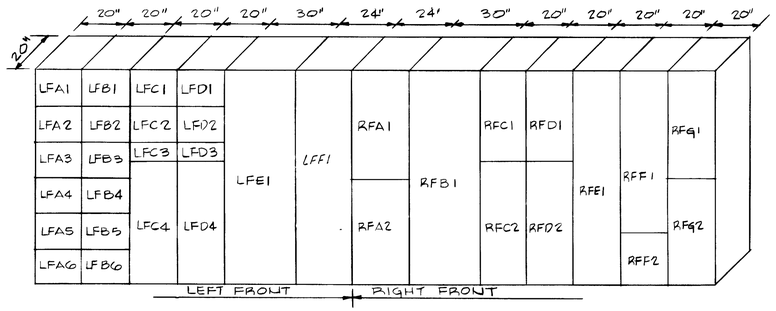

MOTOR CONTROL CENTER MCC-A ELEVATION-FRONT
NO SCALE

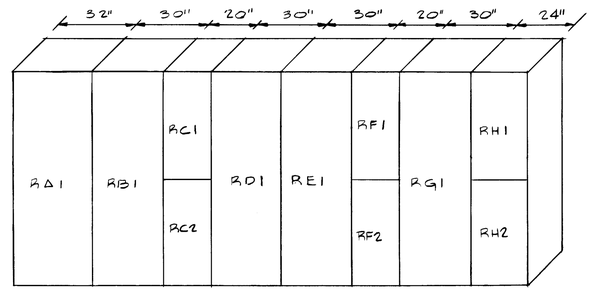

MOTOR CONTROL CENTER MCC-A ELEVATION-REAR
NO SCALE

PANELBOARD SCHEDULES

DESCRIPTION	CKT. NO.	CIRCUIT BREAKER POLE	TRIP	FRAME	SERVICE
"L1" 208Y/120V, 3Φ, 4W 225A M. B'KR. MCC MT'D. TYPE HAB W/GND. BUS	1	1	20	TEB	LIGHTING BAR SCREEN ROOM
	2	1	20	TEB	SEAL PUMP CONTROLS
	3,4,6	1	20	TEB	RECEPTACLES
	5	1	20	TEB	WATER COOLER
	7	1	20	TEB	DAY TANK
	8,9	1	20	TEB	LEVEL CONTROL POWER
	10-14,16	1	20	TEB	LIGHTING
	15	1	20	TEB	LIGHTING
	17,18	1	20	TEB	LIGHTING
	19,20	1	20	TEB	SPARES
	21	1	20	TEB	LT'G. & EXH. FAN (BATHROOM)
	22	1	20	TEB	LIGHTING (STAIRWELL)
	23,25,27	1	20	TEB	LIGHTING & RECEPTACLES
	24	1	20	TEB	RECEPTACLES
	26,28	1	20	TEB	LIGHTING
	29,31	1	20	TEB	LIGHTING & RECEPTACLES
	30	1	20	TEB	SPARE
	32	1	20	TEB	RECEPTACLES
	33,35	1	20	TEB	BLOCK HEATERS-RT. SIDE
	34,36	1	20	TEB	LIGHTING
	37	3	70	TEB	PANELBOARD 'L2'
	38				MOTOR HEATERS
	40-42				BLOCK HEATERS-LT. SIDE
"L2" 208Y/120V, 3Φ, 4W. 100A. M.L.O. MCC MT'D. TYPE HAB W/GND BUS	1	1	20	TEB	EXHAUST FAN 1A
	2	1	15	TEB	EXHAUST FAN 2B
	3	1	20	TEB	EXHAUST FAN 1B
	4	1	15	TEB	SUPPLY AIR FAN 3A
	5	1	20	TEB	EXHAUST FAN 2A
	6	1	15	TEB	SUPPLY AIR FAN 3B
	7	1	15	TEB	SUPPLY AIR FAN 3C
	8	1	15	TEB	SUPPLY AIR FAN 2B
	9	1	15	TEB	SUPPLY AIR FAN 3D
	10	1	15	TEB	EXHAUST FAN 1C
	11	1	15	TEB	SUPPLY AIR FAN 2A
	12	1	15	TEB	EXHAUST FAN 1D
	13	1	20	TEB	UNIT HEATER CONTROL POWER
	14	1	20	TEB	SUPPLY AIR FAN 1B
	15	1	20	TEB	SUPPLY AIR FAN 1A
	16	1	20	TEB	SPARE
	17	1	20	TEB	SPARE
	18	1	20	TEB	SPARE

PANELBOARD SCHEDULE

DESCRIPTION	CKT. NO.	CIRCUIT BREAKER POLE	TRIP	FRAME	SERVICE
"MA" 480V, 3Φ, 3W 500A. M.B. MCC MT'D. TYPE HAB W/GND. BUS	1	3	30	THED	SUMP PUMPS NOS. 1 & 2
	2	3	15	THED	SUMP PUMPS NOS. 3 & 4
	3	3	30	THED	UNIT HEATER NO. 1
	4	3	15	THED	UNIT HEATER NO. 2
	5	3	30	THED	UNIT HEATER NO. 3
	6	3	15	THED	UNIT HEATER NO. 4
	7	3	20	THED	OIL ACCUMULATOR
	8	3	15	THED	SLUICE GATE
	9	3	20	THED	SPARE
	10	3	20	THED	SPARE
	11	3	20	THED	D.T. TRANSFORMER
	12	3	50	THED	SPARE
	13	3	50	THED	DUCT HEATER EH-1B
	14	3	50	THED	DUCT HEATER EH-1A
	15	3	50	THED	DUCT HEATER EH-3B
	16	3	50	THED	DUCT HEATER EH-3A
	17	3	50	THED	DUCT HEATER EH-3D
	18	3	100	THED	DUCT HEATER EH-3C
	19	3	20	THED	SPACE
	20	3	15	THED	SPACE
	21	3	15	THED	SPACE
	22	3	15	THED	SPACE
	23	3	—	THED	SPACE
	24	3	—	THED	SPACE

NOTE:
PANELS SHOWN ARE OF "AS-BUILT" CONDITION

MOTOR CONTROL CENTER SCHEDULE—MCC-A

SPACE NO.	EQUIPMENT DESIGNATION	SWITCH POLE	SWITCH SIZE	FUSE AMPS	FUSE TYPE	MOTOR DATA HP	PH.	VOLTS	CIRCUIT BREAKER POLE	TRIP	FRAME	STARTER TYPE	SIZE	ACCESS.	NOTE
LFA1	SPACE ONLY														
LFA2	SPACE ONLY														
LFA3	SPACE ONLY														
△1 LFA4	BLOWER					20	3	460	3	60	TEC/LIM	FVNR	2	1,2	a,b
△1 LFA5	BAR SCREEN					3/4	3	460	3	15	TEC/LIM	FVNR	1	1,2,3	a,b
LFA6	SPACE ONLY														
△1 LFB1	FLUSHING WATER PUMP					15	3	460	3	40	TEC/LIM	FVNR	2	1,2,3	a,b
△1 LFB2	DEWATERING PUMP					1½	3	460	3	15	TEC/LIM	FVNR	1	1,2	a,b
△1 LFB3	EXHAUST FAN 3A					1	3	460	3	15	TEC/LIM	FVNR	1	1,2,3	a,b
△1 LFB4	EXHAUST FAN 3B					1	3	460	3	15	TEC/LIM	FVNR	1	1,2,3	a,b
△1 LFB5	BAR SCREEN					3/4	3	460	3	15	TEC/LIM	FVNR	1	1,2,3	a,b
△2 LFB6	SEAL WATER PUMP Nº 1					10	3	460	3	15		FVNR	1	1,2,3	a,b
△2 LFC1	" " " Nº 2					10	3	460	3	15		FVNR	1	1,2,3	a,b
LFC2	SPACE ONLY														
LFC3	BLANK														
△1 LFC4	PUMP #1					150	3	460	3	250	TEC/LIM	FVNR	5	1,2	a,b
LFD1	SPACE ONLY														
△2 LFD2	SPACE ONLY														a
LFD3	BLANK														
△1 LFD4	PUMP #2					150	3	460	3	250	TEC/LIM	FVNR	5	1,2	a,b
△2				—	—										
LEF1	MCC-A (LEFT) MAIN								3	800	1600				
LFF1	TRANSFER SWITCH	3	1200												
REA1	ANNUNCIATOR														
REA2	SENSOR & RELAY PANEL														
REB1	MCC-A (RIGHT) MAIN								3	1000	1600				
RFC1	SPACE ONLY														
△1 RFC2	PUMP #3					150	3	460	3	250	TEC/LIM	FVNR	5	1,2	a,b
RFD1	SPEED CONTROL UNIT XFMR.														a,d
△1 RFD2	PUMP #4					150	3	460	3	250	TEC/LIM	FVNR	5	1,2	a,b
△1 RFE1	PANELBOARD "MA"								3	500	TJK				
△1 △1 RFF1	PANEL BOARD "L1"														
RFF2	BLANK														
RFG1	PANELBOARD "L2"														
RFG2	HT'G. & VENT. CONTROLS														
△2 RA1	SPACE														
RB1	RESISTOR BANK														
RC1	SPEED CONTROL UNIT														
RC2	SPEED CONTROL UNIT														
RD1	RESISTOR BANK														
RE1	RESISTOR BANK														
RF1	SPEED CONTROL UNIT														
RF2	SPEED CONTROL UNIT														
RG1	RESISTOR BANK														
△2 RH1	SPACE														
RH2	SPACE ONLY														

ACCESSORIES:
1. GREEN PILOT LIGHT TO INDICATE "MOTOR OFF"
2. RED PILOT LIGHT TO INDICATE "MOTOR RUNNING"
3. H-O-A SELECTOR SWITCH.

NOTES:
a. SEE CONTROL & SINGLE LINE DIAGRAMS FOR ACCESSORIES & WIRING SCHEMES.
b. TEC/LIM OR TEC/LIM DENOTES MOTOR CKT. PROTECTOR W/ CURRENT LIMITER.
c. CONTACTOR MECHANICALLY HELD IN EITHER POSITION.
d. TRANSFORMER SIZE SHALL BE PROVIDED BY PUMP SPEED CONTROL UNIT SUPPLIER.

12927

AS BUILT
OCT. 1981

E-3

NO.	DESCRIPTION	BY	FIRM	DATE	S&P	DATE	PW	DATE
△2	ADDENDUM Nº 1	DL	F.A.	3/78		5/78		5/31/78
△1	PRE-BID REVISIONS	JB	F.A.			3/78		3/31/78
	REVISIONS	SUBMITTAL			APPROVAL			

SUBMITTED BY: [signature]
REG. ENGR. FLA. NO. 6847 DATE 1/77
FLOOD & ASSOCIATES, INC.
APPROVAL RECOMMENDED BY [signature]
REG. ENGR. FLA. NO. 14824 DATE 3-28-78
SVERDRUP & PARCEL AND ASSOCIATES, Inc

APPROVED BY: _____
REG. ENGR. FLA. NO. _____ DATE _____
WATER AND SEWER DIVISION
AUTHORIZED BY [signature]
REG. ENGR. FLA. NO. 9270 DATE 7/13/78
OFFICE OF DIRECTOR OF PUBLIC WORKS
CITY OF JACKSONVILLE, FLORIDA

CITY OF JACKSONVILLE, FLORIDA

SEWERAGE IMPROVEMENT PROGRAM
ST. JOHNS BLUFF
MASTER PUMPING STATION

FLOOD & ASSOCIATES, INC.
DESIGN CONSULTANT
SVERDRUP & PARCEL AND ASSOCIATES, Inc. — GENERAL CONSULTANT

DETAILED BY: SBD SCALE NO SCALE DATE JAN 1977
CHECKED BY: _____

MOTOR CONTROL CENTER SCHEDULE-MCC-A
ELEVATIONS & PANELBOARD SCHEDULE

CONTR. NO. JS-40.7 PROJ. NO. 7316 SHEET NO. 33 OF 42

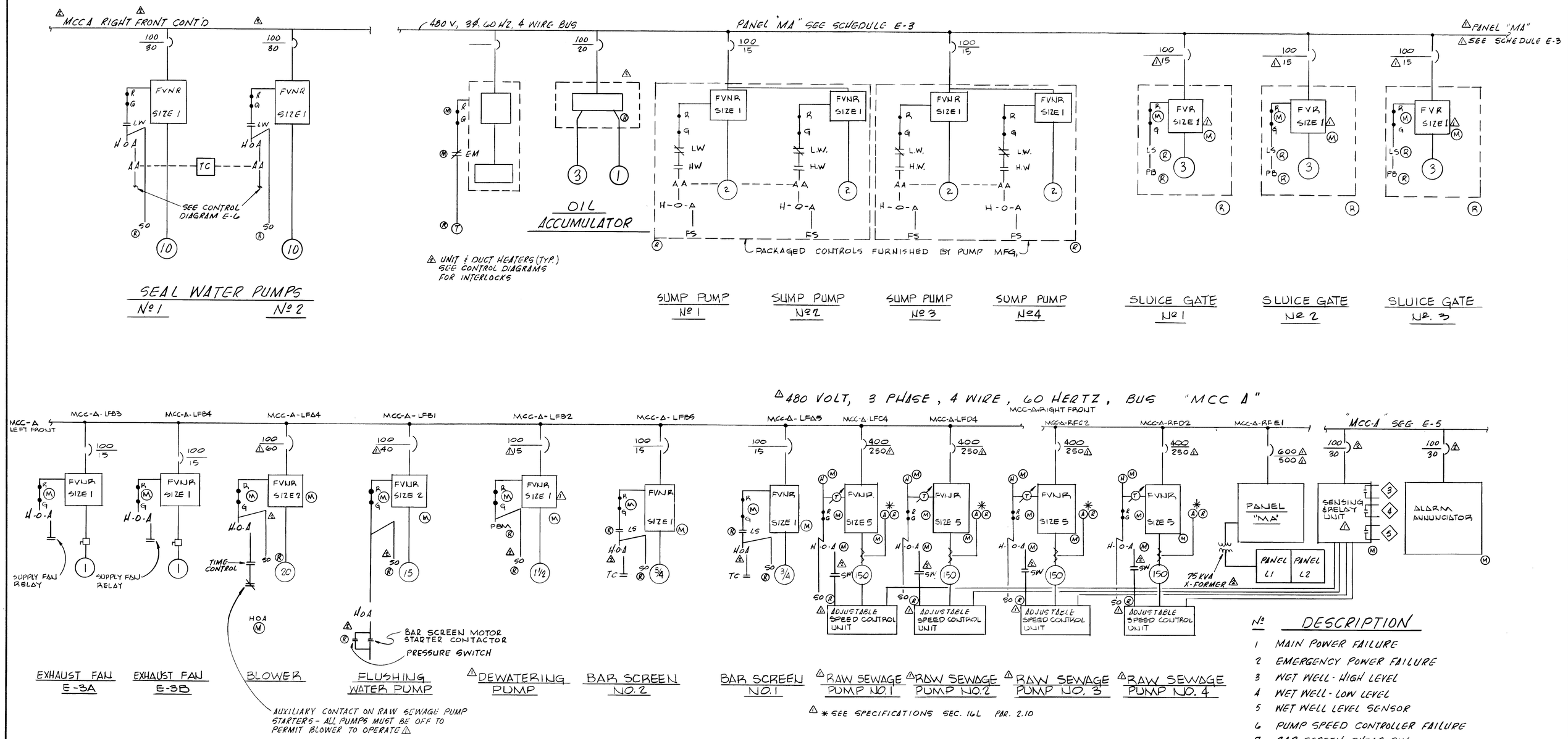

Nº	DESCRIPTION
1	MAIN POWER FAILURE
2	EMERGENCY POWER FAILURE
3	WET WELL - HIGH LEVEL
4	WET WELL - LOW LEVEL
5	WET WELL LEVEL SENSOR
6	PUMP SPEED CONTROLLER FAILURE
7	BAR SCREEN SHEAR PIN
8	SEAL WATER FLOW SWITCH
9	CHECK VALVE LIMIT SWITCH
10	WET WELL SUPPLY FAN
11	WET WELL EXHAUST FAN
12	SPARE

12928

AS BUILT
OCT. 1981

E-4

NO.	REVISIONS	BY	FIRM	DATE	SUBMITTAL S&P	DATE	APPROVAL PW	DATE
2	ADDENDUM Nº 1	DL	F&A	3/78		5/78	J.HH	5/18/78
1	PRE-BID REVISIONS	JE	F&A	7-77		3/78	J.HH	3/30/78

SUBMITTED BY: _____
REG. ENGR. FLA. NO. 6874 DATE 1/77
FLOOD & ASSOCIATES, INC.
APPROVAL RECOMMENDED BY: _____
REG. ENGR. FLA. NO. 14 824 DATE 9 22 78
SVERDRUP & PARCEL AND ASSOCIATES, INC.

APPROVED BY: _____
REG. ENGR. FLA. NO. _____ DATE _____
WATER AND SEWER DIVISION
AUTHORIZED BY: _____
REG. ENGR. FLA. NO. _____ DATE 3/30/78
OFFICE OF DIRECTOR OF PUBLIC WORKS
CITY OF JACKSONVILLE, FLORIDA

CITY OF JACKSONVILLE, FLORIDA

SEWERAGE IMPROVEMENT PROGRAM
ST. JOHNS BLUFF
MASTER PUMPING STATION

FLOOD & ASSOCIATES, INC.
DESIGN CONSULTANT
SVERDRUP & PARCEL AND ASSOCIATES, INC. — GENERAL CONSULTANT

DETAILED BY: SBD
CHECKED BY: RVT
SCALE NO SCALE
DATE JAN. 1977

MOTOR CONTROL CENTER "A" SINGLE LINE DIAGRAMS

CONTR. NO. JS-40.7 | PROJ. NO. 7316 | SHEET NO. 34 OF 42

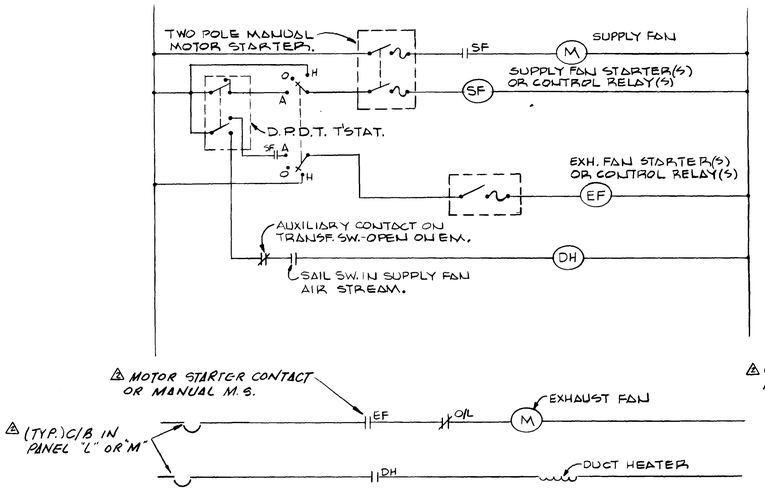

BASIC VENTILATION & HEATING CONTROL WIRING DIAGRAMS
FANS & HT'R. CONTROLLED BY T'STAT
NO SCALE

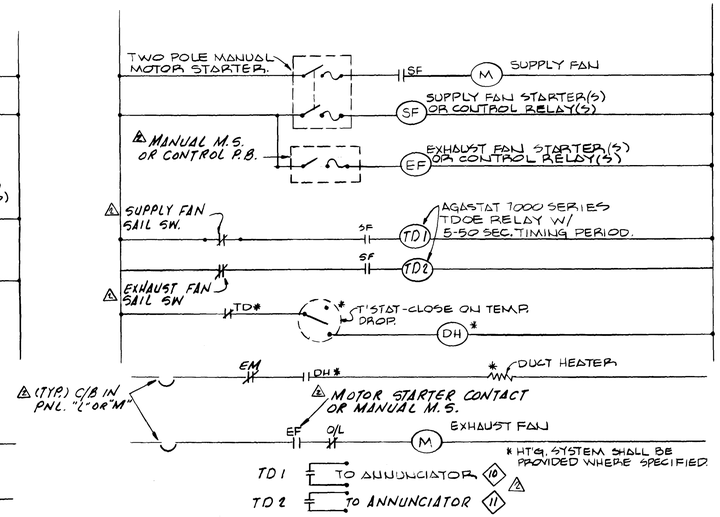

BASIC VENTILATION & HEATING CONTROL WIRING DIAGRAMS
(FANS RUN CONTINUOUSLY)
NO SCALE

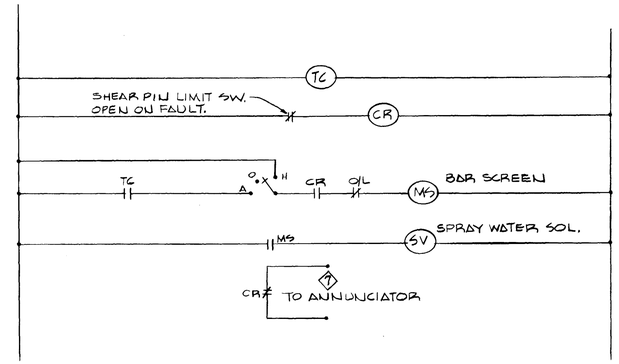

BAR SCREEN CONTROL WIRING DIAGRAM
NO SCALE

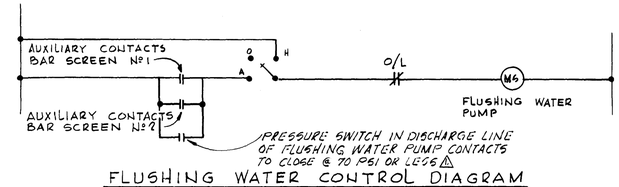

FLUSHING WATER CONTROL DIAGRAM
NO SCALE

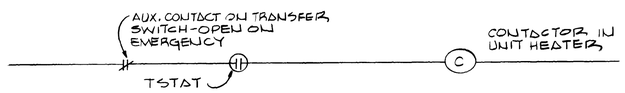

TYPICAL UNIT HEATER CONTROL WIRING DIAGRAM
NO SCALE

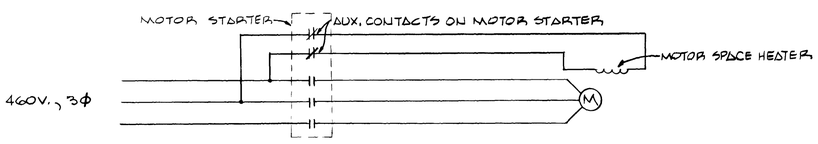

TYPICAL MOTOR SPACE HEATER CONTROL WIRING DIAGRAM
NO SCALE

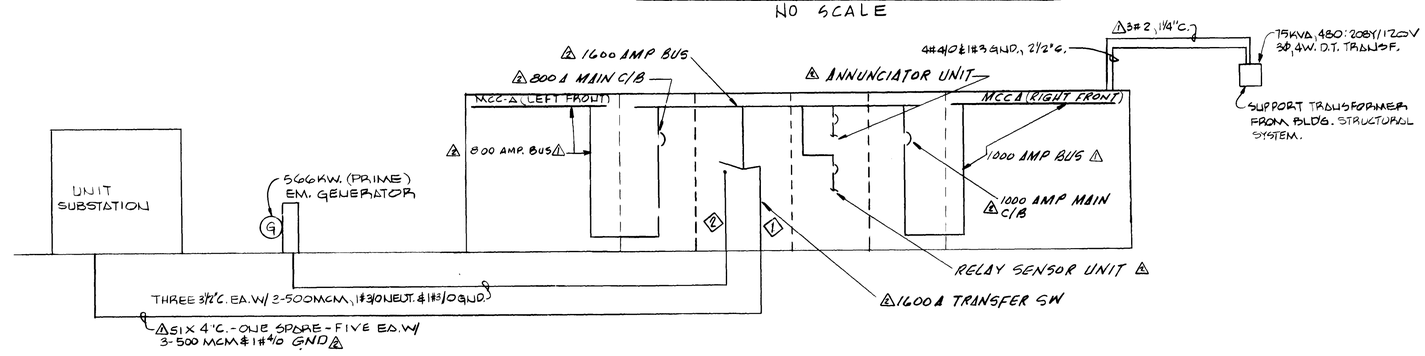

STATION ONE LINE DIAGRAM
NO SCALE

NOTE: REFER TO BARBER-COLMAN DWG. JAX 79-568-4

12929

AS BUILT
OCT. 1981

E-5

NO.	DESCRIPTION	BY	FIRM	DATE	S&P	DATE	PW	DATE
	REVISIONS	SUBMITTAL			APPROVAL			
6	ADDENDUM Nº 1	DC	F&A	5/78		5/78	JHH	5/31/78
5	PRE-BID REVISIONS	JB	F&A	9-77		3/78	JHH	3/31/78

SUBMITTED BY: [signature]
REG. ENGR. FLA. NO. 6847 DATE 1/77
FLOOD & ASSOCIATES, INC.
APPROVAL RECOMMENDED BY: [signature]
REG. ENGR. FLA. NO. 14824 DATE 3-28-78
SVERDRUP & PARCEL AND ASSOCIATES, INC.

APPROVED BY:
REG. ENGR. FLA. NO. ____ DATE ____
WATER AND SEWER DIVISION
AUTHORIZED BY: [signature]
REG. ENGR. FLA. NO. 9270 DATE 3/30/78
OFFICE OF DIRECTOR OF PUBLIC WORKS
CITY OF JACKSONVILLE, FLORIDA

CITY OF JACKSONVILLE, FLORIDA

SEWERAGE IMPROVEMENT PROGRAM
ST. JOHNS BLUFF
MASTER PUMPING STATION

FLOOD & ASSOCIATES, INC.
DESIGN CONSULTANT
SVERDRUP & PARCEL AND ASSOCIATES, INC. — GENERAL CONSULTANT

DETAILED BY: SBD
CHECKED BY: RVT
SCALE NO SCALE
DATE JAN 1977

CONTROL DIAGRAMS

CONTR. NO. JS-40.7
PROJ. NO. 7316
SHEET NO. 35 OF 42

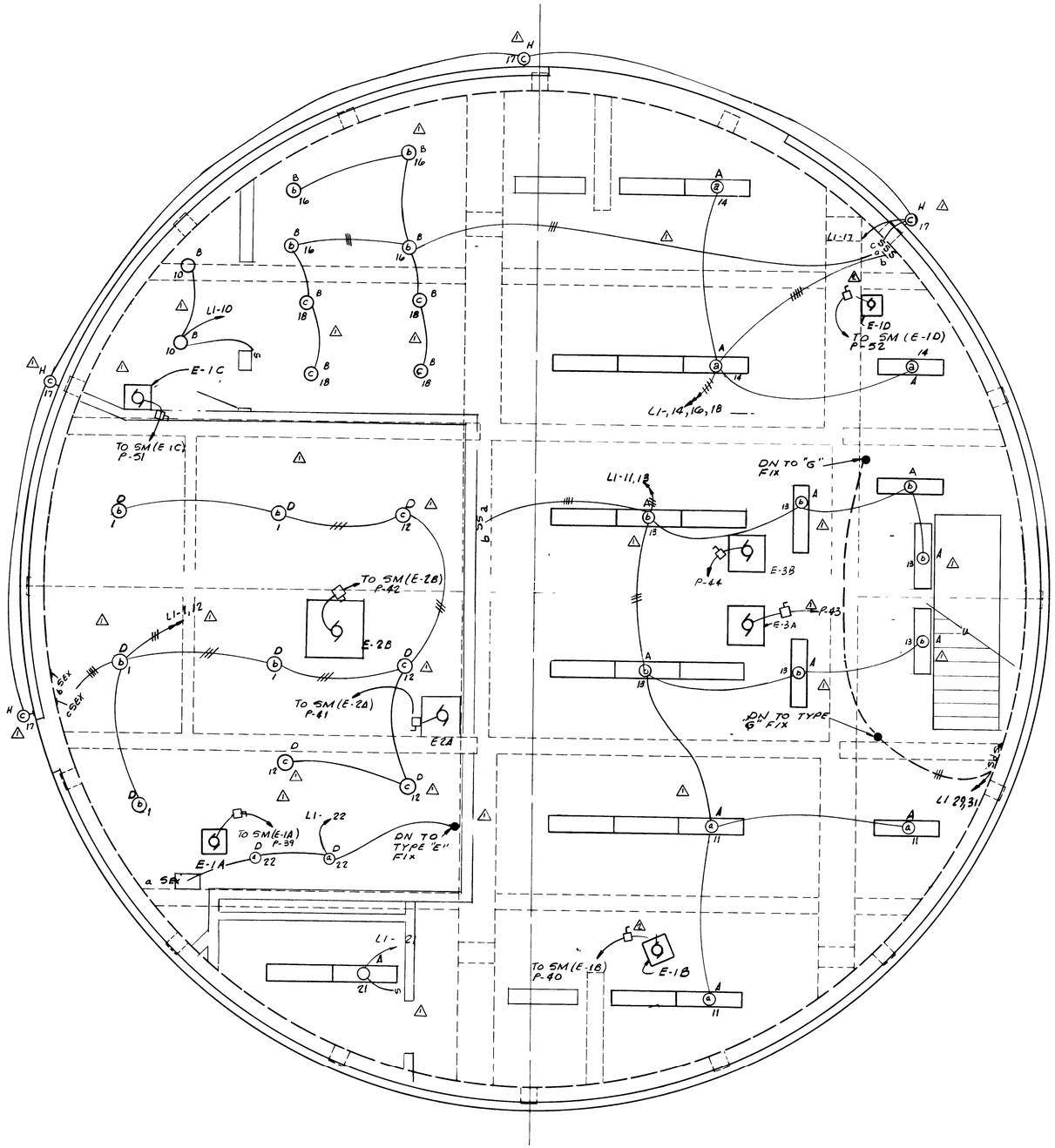

ROOF & 1ST FLOOR LIGHTING PLAN

SCALE: 1/4" = 1'-0"

FIXTURE SCHEDULE

TYPE	MANUFACTURER	CATLOG NO	LAMP	MOUNTING
A	BENJAMIN	FL-1024-4U	2-40W-P/S	CEILING
B	CROUSE HINDS	EVCx2011	150 W	CEILING
N/A				
D	CROUSE HINDS	EVCx2051	300 W	CEILING EXPLOSION PROOF
E	CROUSE HINDS	EVBx 205	300 W	BRACKET EXPLOSION PROOF
F	STONCO	75 F. BOX w/ THREE CLD 1500 LAMPHOLDER	2-150W PAR FLOOD 1 150W PAR SPOT	WALL
G	CROUSE HINDS	QB 500 47798	500W-T3	BRACKET
H	STONCO	PB40 IRM	200W	BRACKET

NOTE: ALL FLUORESCENT FIXTURES TYPE A

SEAL WATER SYSTEM CONTROL DIAGRAM

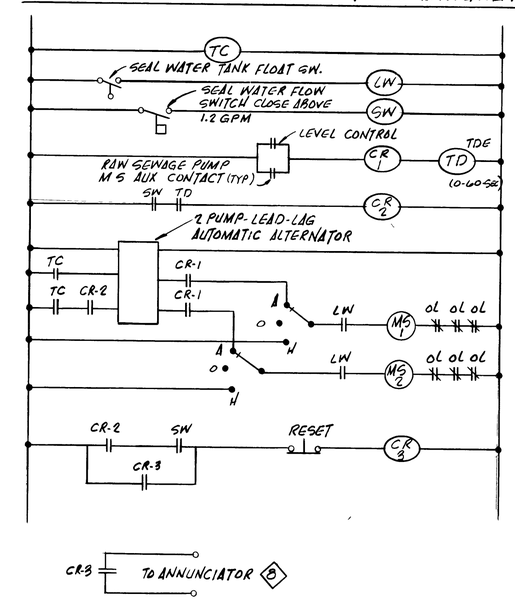

12930

AS BUILT
OCT 1981

E-6

NO	DESCRIPTION	BY	FIRM	DATE	S&P	DATE	PW	DATE
1	ADDENDUM Nº 1	DL	F A	5/78		5/78		5/8/78
0	PRE-BID REVISION	JB	F A	9-17-76		3/78		3/30/78

REVISIONS — SUBMITTAL — APPROVAL

SUBMITTED BY
REG ENGR FLA NO 6847 DATE 9/76
FLOOD & ASSOCIATES INC
APPROVAL RECOMMENDED BY
REG ENGR FLA NO 14224 DATE 3-28-78
SVERDRUP & PARCEL AND ASSOCIATES INC

APPROVED BY
REG ENGR FLA NO DATE
WATER AND SEWER DIVISION
AUTHORIZED BY
REG ENGR FLA NO 9770 DATE 3/30/78
OFFICE OF DIRECTOR OF PUBLIC WORKS
CITY OF JACKSONVILLE FLORIDA

CITY OF JACKSONVILLE, FLORIDA

SEWERAGE IMPROVEMENT PROGRAM
ST JOHNS BLUFF
MASTER PUMPING STATION

FLOOD & ASSOCIATES, INC.
DESIGN CONSULTANT
SVERDRUP & PARCEL AND ASSOCIATES, Inc — GENERAL CONSULTANT

DETAILED BY C D SCALE AS SHOWN DATE SEPT 1976
CHECKED BY B A B.

ELECTRICAL / ROOF PLAN

CONTR NO JS 407 PROJ NO 7316 SHEET NO 36 OF 42

K&E 19 1253 1 76 IBC 4465-

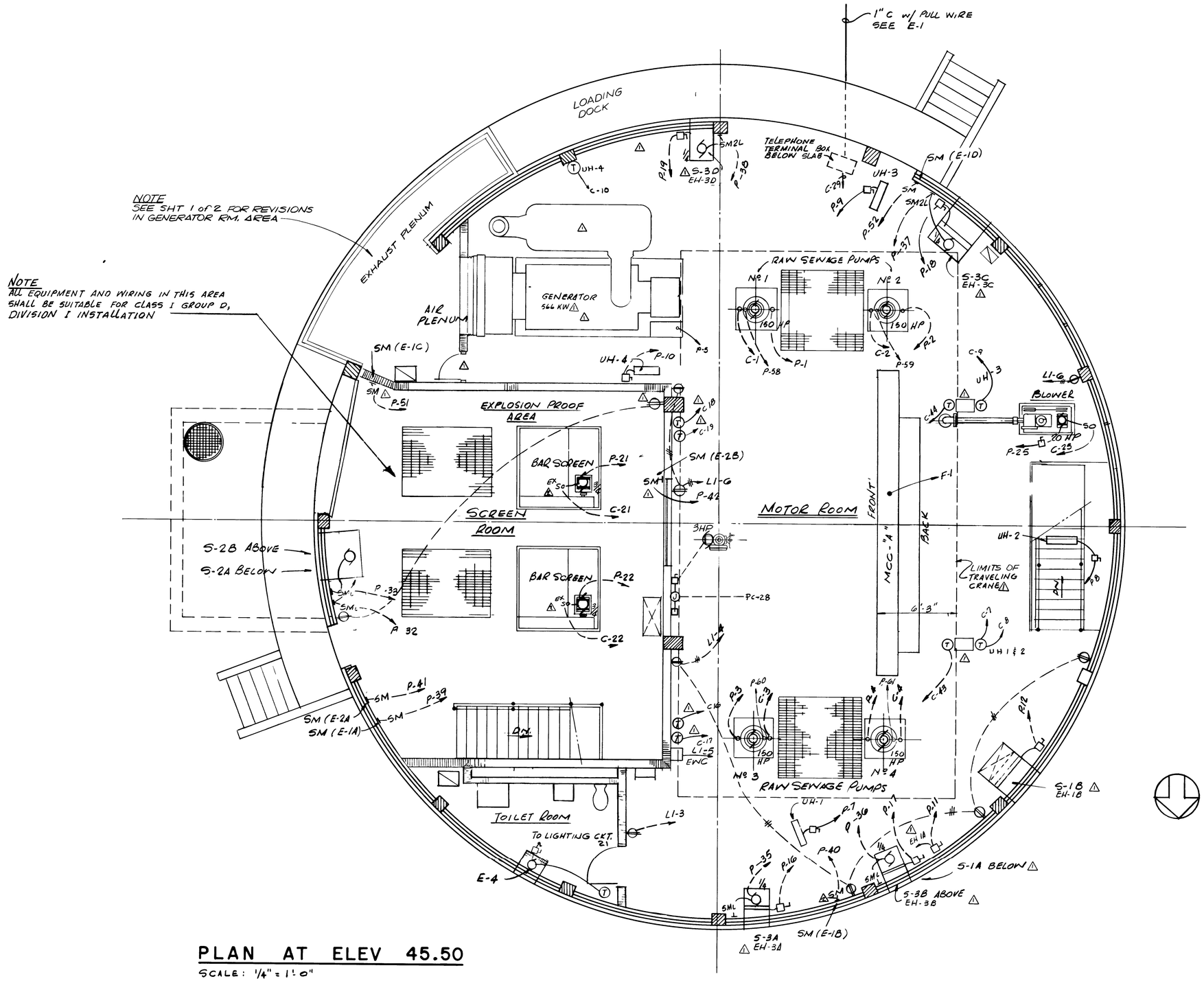

PLAN AT ELEV 45.50

SCALE: 1/4" = 1'-0"

12931

AS BUILT
OCT. 1981

E-7

NO	DESCRIPTION	BY	FIRM	DATE	S&P	DATE	PW	DATE
	REVISIONS	SUBMITTAL			APPROVAL			
2	ADDENDUM Nº 1	DL	F&A	5/78		5/78	J.H.H.	5/8/78
1	PRE-BID REVISION	JB	F&A	9/77		2/78	J.H.H.	3/7/78

SUBMITTED BY: James B. Englert
REG ENGR FLA NO 6847 DATE 9/76
FLOOD & ASSOCIATES INC
APPROVAL RECOMMENDED BY
REG ENGR FLA NO 14824 DATE 3-28-78
SVERDRUP & PARCEL AND ASSOCIATES, INC

APPROVED BY
REG ENGR FLA NO DATE
WATER AND SEWER DIVISION
AUTHORIZED BY
REG ENGR FLA NO 4270 DATE 4-4-78
OFFICE OF DIRECTOR OF PUBLIC WORKS
CITY OF JACKSONVILLE, FLORIDA

CITY OF JACKSONVILLE, FLORIDA

SEWERAGE IMPROVEMENT PROGRAM
ST JOHNS BLUFF
MASTER PUMPING STATION

FLOOD & ASSOCIATES, INC.
DESIGN CONSULTANT
SVERDRUP & PARCEL AND ASSOCIATES, INc. — GENERAL CONSULTANT

DETAILED BY C D
CHECKED BY B A B
SCALE AS SHOWN
DATE SEPT 1976

ELECTRICAL / PLAN AT ELEV. 45 50

CONTR NO JS 407
PROJ NO 7316
SHEET NO 37 OF 42

K&E 10 1253 1 76 MC 4405

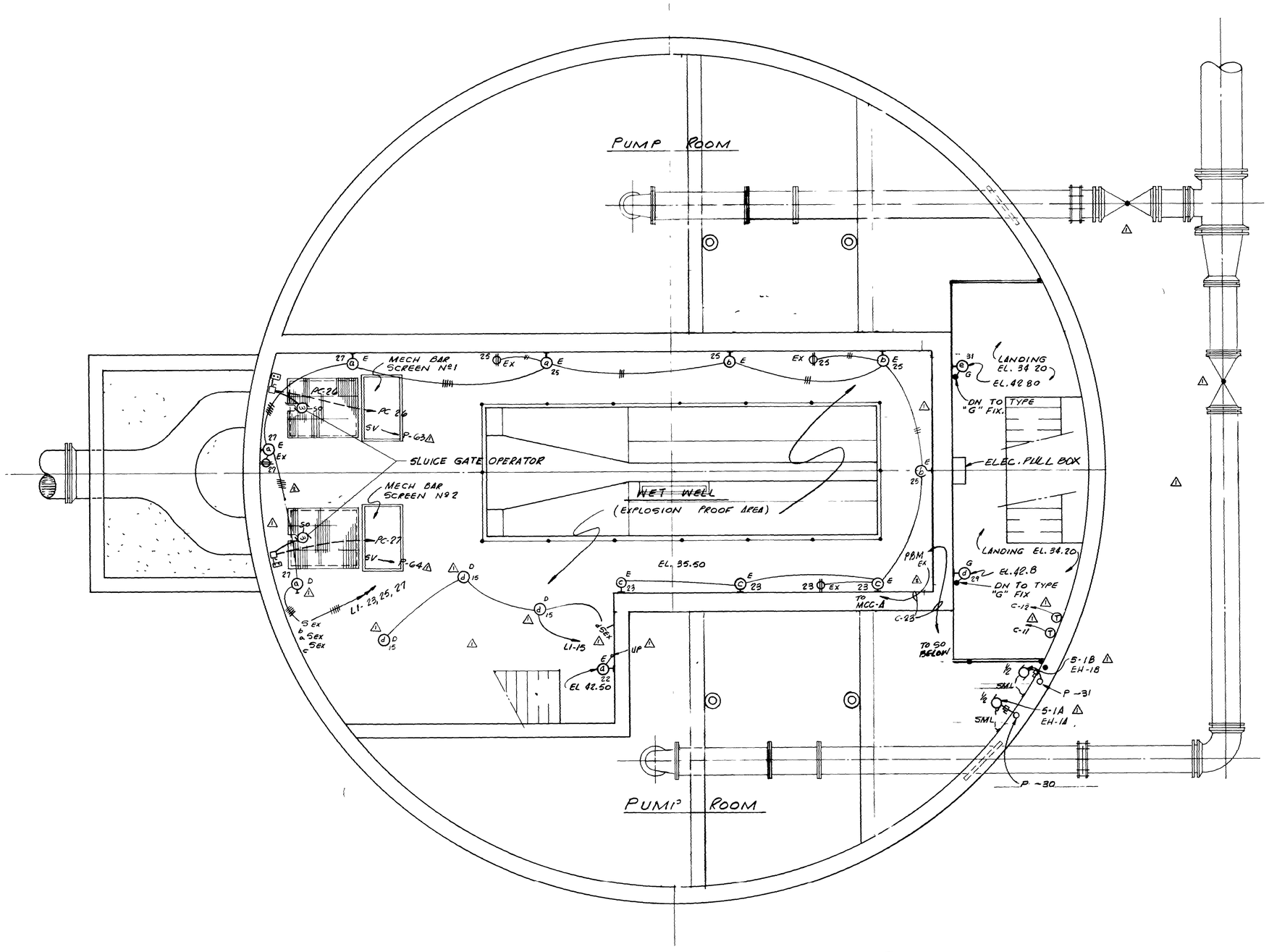

PLAN @ ELEV. 35.50

SCALE 1/4"= 1'-0"

12932

AS BUILT
OCT. 1981

E-8

NO	DESCRIPTION	BY	FIRM	DATE	S&P	DATE	PW	DATE
1	PRE BID REVISION	JB	F+A	9-77	[illegible]	3/78	[illegible]	[illegible]
	REVISIONS	SUBMITTAL			APPROVAL			

SUBMITTED BY [signature]
REG ENGR FLA NO 6847 DATE 9/76
FLOOD & ASSOCIATES INC

APPROVAL RECOMMENDED BY [signature]
REG ENGR FLA NO 14224 DATE 3-22-78
SVERDRUP & PARCEL AND ASSOCIATES INC

APPROVED BY
REG ENGR FLA NO DATE
WATER AND SEWER DIVISION

AUTHORIZED BY [signature]
REG ENGR FLA NO 0 9270 DATE 3/30/78
OFFICE OF DIRECTOR OF PUBLIC WORKS
CITY OF JACKSONVILLE FLORIDA

CITY OF JACKSONVILLE, FLORIDA

SEWERAGE IMPROVEMENT PROGRAM
ST JOHNS BLUFF
MASTER PUMPING STATION

FLOOD & ASSOCIATES, INC.
DESIGN CONSULTANT
SVERDRUP & PARCEL AND ASSOCIATES, INC — GENERAL CONSULTANT

DETAILED BY C D
CHECKED BY B A B
SCALE AS SHOWN
DATE SEPT 1976

ELECTRICAL/PLAN AT ELEV 35.50

CONTR NO JS 40.7
PROJ NO 7316
SHEET NO 38 OF 42

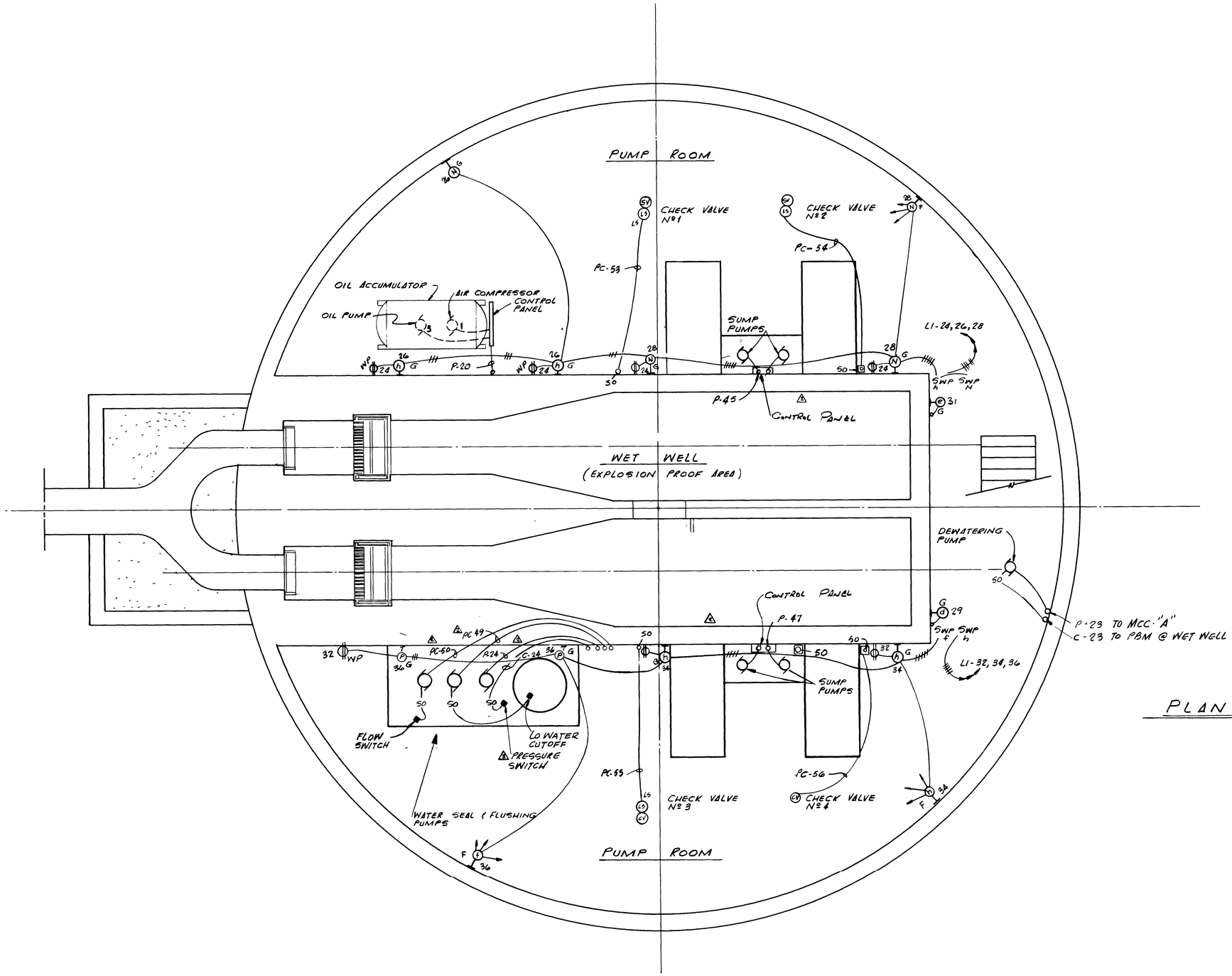

PLAN @ ELEV. 22.89

SCALE: 1/4" = 1'-0"

12933

AS BUILT

OCT, 1981

E-9

NO	DESCRIPTION	BY	FIRM	DATE	S&P	DATE	PW	DATE
	REVISIONS	SUBMITTAL			APPROVAL			

SUBMITTED BY
REG ENGR FLA NO 6847 DATE 9/76
FLOOD & ASSOCIATES INC
APPROVAL RECOMMENDED BY
REG ENGR FLA NO 48 24 DATE 3 28 78
SVERDRUP & PARCEL AND ASSOCIATES INC

APPROVED BY
REG ENGR FLA NO DATE
WATER AND SEWER DIVISION
AUTHORIZED BY
REG ENGR FLA NO 29270 DATE 2/20/78
OFFICE OF DIRECTOR OF PUBLIC WORKS
CITY OF JACKSONVILLE, FLORIDA

CITY OF JACKSONVILLE, FLORIDA

SEWERAGE IMPROVEMENT PROGRAM
ST JOHNS BLUFF
MASTER PUMPING STATION

FLOOD & ASSOCIATES, INC.
DESIGN CONSULTANT
SVERDRUP & PARCEL AND ASSOCIATES, INC — GENERAL CONSULTANT

DETAILED BY C D | SCALE AS SHOWN | DATE SEPT 1976
CHECKED BY B A B

ELECTRICAL/PLAN AT ELEV 22.89

CONTR NO J9 40 7 | PROJ NO 7316 | SHEET NO 39 OF 42

K&E 19 7 MC 27.

CONDUIT NO	CONDUIT SIZE	CABLE COND	CABLE SIZE	CABLE INS	CABLE VOLT	FROM	TO	FOR	REMARKS
F-1	5-4"	3 EA 1 EA	500 MCM 4/0	RHW	600	MCC-A	OUTDOOR UNIT SUBSTATION	POWER	
	4"	-				MCC-A	" " "	SPARE	
P-1	2 1/2"	3	250 MCM	THW	600	MCC-A	RAW SEWAGE PUMP Nº1	POWER & MOTOR SPACE HEATER	
C-1	1"	6	10				" " " Nº1	CONTROL	
P-2	2 1/2"	3	250 MCM				" " " Nº2	POWER & MOTOR SPACE HEATER	
C-2	1"	6	10				" " " Nº2	CONTROL	
P-3	2 1/2"	3	250 MCM				" " " Nº3	POWER & MOTOR SPACE HEATER	
C-3	1"	6	10				" " " Nº3	CONTROL	
P-4	2 1/2"	3	250 MCM				" " " Nº4	POWER & MOTOR SPACE HEATER	
C-4	1"	6	10				" " " Nº4	CONTROL	
P-5	3-3 1/2"	3 EA 1	300 MCM 250 250	THW	600	MCC-A	EMERGENCY GENERATOR	POWER	EXTRA 250 IS GROUND CONDUCTOR
C-5	2"	28	12	"	"	"	" "	CONTROL & INTERLOCKS	
P-7	3/4"	4	12	THW	600	P/BD "MA"	UNIT HEATER UH-1	POWER	INTERLOCK TO RUN ON NORMAL POWER ONLY
C-7	3/4"	2	12				(T) UH-1	CONTROL	INTERLOCK TO RUN ON NORMAL POWER ONLY
P-8	3/4"	4	10			P/BD "MA"	" " UH-2	POWER	INTERLOCK TO RUN ON NORMAL POWER ONLY
C-8	3/4	2	12				(T) UH-2	CONTROL	
P-9	3/4	4	12			P/BD "MA"	" " UH-3	POWER	
C-9	3/4"	2	12				(T) UH-3	CONTROL	
P-10	3/4"	4	12			P/BD "MA"	" " UH-4	POWER	
C-10	3/4"	2	12				(T) UH-4	CONTROL	
P-11	1"	4 2	8 12			P/BD "MA" △	DUCT HEATER EH-1A	POWER EH-1A	INTERLOCK TO RUN ON NORMAL POWER ONLY
C-11	1/2"	3	12				EH-1A (T) △	FAN & HTG CONTROL SECT MCC A	CONTROL VENT & HTG (EH-1A)
P-12	1"	4 2	8 12			P/BD "MA" △	DUCT HEATER EH-1B	POWER EH-1B	
C-12	3/4	4	12	THW	600	EH-1B (T) △	FAN & HTG CONTROL SECT MCC A	CONTROL VENT & HTG (EH-1B)	
P-16	1"	4	4	THW	600	P/BD MA	DUCT HEATER EH-3A	POWER EH-3A	
C-16	3/4"	4	12				(T) 5-3A	FAN & HTG CONTROL MCC-A	CONTROL VENT & HTG (EH 3A)
P-17	1"	4	4			P/BD MA	DUCT HEATER EH 3B	POWER EH-3B	
C-17	3/4"	4	12				(T) 5-3B	FAN & HTG CONTROL MCC-A	CONTROL VENT & HTG (EH-3B)
P-18	1"	4	4			P/BD MA	DUCT HEATER EH-3C	POWER EH 3C	
C-18	3/4"	4	12				(T) 5-3C	FAN & HTG. CONTROL MCC A	CONTROL VENT & HTG (EH-3C)
P-19	1"	4	4			P/BD MA	DUCT HEATER EH 3D	POWER EH-3D	
C-19	3/4"	4	12				(T) 5-3D	FAN & HTG CONTROL MCC A	CONTROL VENT & HTG (EH-3D)
P-20	1"	5	10	THW	600	P/BD MA	OIL ACCUMULATOR	POWER	INTERLOCK TO RUN ON NORMAL POWER ONLY
P-21	1"	4	12	THW	600	MCC-A	BAR SCREEN Nº 1	POWER	
C-21	1"	6	12				" " "	CONTROL	SO & LS △
P 22	1"	4	12				BAR SCREEN Nº 2	POWER	
C-22	1"	6	12				" " "	CONTROL	SO & LS △
P-23	1"	4 2	10 12				DEWATERING PUMP	POWER & MOTOR SPACE HTR	
C-23	1"	3	12				" "	CONTROL	SO & PBM △
P-24	1"	4 2	10 12				FLUSHING WATER PUMP	POWER & MOTOR SPACE HTR	
C-24	1"	6	12				" " "	CONTROL	SO & PS △
P-25	1"	4 2	10 12				BLOWER	POWER & MOTOR SPACE HTR	
C-25	1"	4	10			MCC-A	"	CONTROL	
PC 26	1"	10	12			P/BD "MA"	SLUICE GATE Nº 1	POWER & CONTROL	
PC 27	1"	10	12			P/BD "MA"	" " Nº 2	" "	
PC-28	1"	10	12	THW	600	P/BD "MA"	" " Nº 3	" "	
C-29	1"			THW	600	MCC-A	TELEPHONE JUNCTION BOX	TELEMETERING	W- PULL WIRE △
P-63	3/4	4	12	THW	600	MCC A △	SOLENOID VALVE Nº1 BAR SCREEN	POWER	
P 64	3/4	4	12	THW	600	MCC-A △	SOLENOID VALVE Nº2 BAR SCREEN	POWER	
F 2	4"	4	1/0	PILC	25KV	POWER UTILITY POLE	UNIT SUBSTATION	POWER	
	"					" "	"	SPARE	CONDUIT ONLY

CONDUIT NO	CONDUIT SIZE	CABLE COND	CABLE SIZE	CABLE INS	CABLE VOLT	FROM	TO	FOR	REMARKS
P-30	3/4"	3	12	THW	600	FAN & HTG CONTROL SECT (MCC A)	SUPPLY FAN S-1A	POWER & INTERLOCK & SAIL SW	SEE CONTROL WIRING DIAGRAM
P-31	3/4"	3	12			FAN & HTG CONTROL SECT (MCC A)	" " S-1B	" " & " "	
P-32	3/4"	3	12			FAN & HTG CONTROL SECT (MCC-A)	" " S-2A		
P-33	3/4"	3	12			FAN & HTG CONTROL SECT (MCC-A)	" " S-2B		
P-35	3/4"	6	12			FAN & HTG CONTROL SECT (MCC A)	SUPPLY FAN S-3A	POWER & INTERLOCK & SAIL SW	
P-36	3/4"	6	12			" " "	" " S-3B	" " " "	
P-37	3/4"	6	12			" " "	" " S-3C	" " " "	
P-38	3/4"	6	12			" " "	" " S-3D	" " " "	
P-39	3/4"	6	12			" " "	EXHAUST FAN E-1A	POWER & CONTROL & SAIL SW	
P-40	3/4"	6	12			" " "	" " E-1B	" " " "	
P-41	3/4"	3	12			" " "	" " E-2A	" "	
P-42	3/4"	3	12			" " "	" " E-2B	" "	
P-43	3/4"	6	12			MCC-A	" " E-3A	" "	
P-44	3/4"	6	12			MCC-A	" " E-3B	" " & SAIL SW	
P-45	1"	4	12			POWER PANEL "MA"	SUMP PUMP Nº1 & Nº 2	" " " "	
P-47	1"	4	12			" " "MA"	" " Nº3 & Nº 4	" "	
PC-49	1"	10	12			MCC-A	WATER SEAL Nº1	POWER & CONTROL (SO & FLOAT SW)	
PC-50	1"	10	12			MCC-A	" " Nº2	" " (SO & FLOAT SW)	
P-51	1"	6	12			FAN & HTG CONTROL SECT (MCC A)	EXHAUST FAN E-1C	" " & SAIL SW	
P-52	1"	6	12			FAN & HTG CONTROL SECT (MCC A)	" " E-1D	" & SAIL SW	
PC-53	1"	10	12			MCC-"A"	CHECK VALVE	CONTROL	VERIFY CONTROL WIRING W/EA SUPPLIER
PC-54	1"	10	12			"	" "	" "	
PC-55	1"	10	12			"	"	" "	
PC-56	1"	10	12			"	" "	" "	
C-44	3/4"	3	12	THW	600	FAN & HTG CONTROL SECT (MCC A)	(T) FOR E-3B		
C-43	3/4"	3	12	THW	600	FAN & HTG. CONTROL SECT (MCC A)	(T) FOR E-3A		
P-58	2 1/2"	3	250 MCM	THW	600	MCC-A	RAW SEWAGE PUMP Nº1	MOTOR SECONDARY LEADS	VERIFY CONDUCTOR SIZE W/EA SUPPLIER
P-59	2 1/2"	3	250 MCM				RAW SEWAGE PUMP Nº2	MOTOR SECONDARY LEADS	
P-60	2 1/2"	3	250 MCM				RAW SEWAGE PUMP Nº3	MOTOR SECONDARY LEADS	
P-61	2 1/2"	3	250 MCM				RAW SEWAGE PUMP Nº4	MOTOR SECONDARY LEADS	

12934 1

(E-10)

AS BUILT
OCT 1981

△ ADDENDUM Nº 1
△ PRE-BID REVISIONS

DL F1A 5/18 5/18 JPP
JB F4A 9/77 3/78

6847 9/76
141324 3 28 78

3/26/76

CITY OF JACKSONVILLE, FLORIDA

SEWERAGE IMPROVEMENT PROGRAM
ST JOHNS BLUFF
MASTER PUMPING STATION

FLOOD & ASSOCIATES INC
DESIGN CONSULTANT
SVERDRUP & PARCEL AND ASSOCIATES INC — GENERAL CONSULTANT

DRN CD
CHK BAB
SCALE
DATE SEPT 1976

CONDUIT & CABLE SCHEDULES

JS 407 | 7316 | SHEET NO 40 OF 42

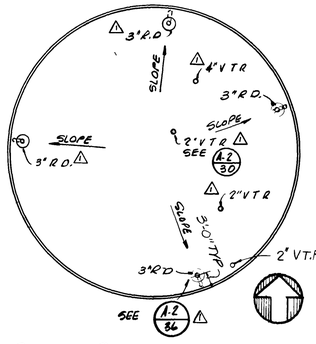

ROOF PLAN - SCALE: 1/16" = 1'-0"

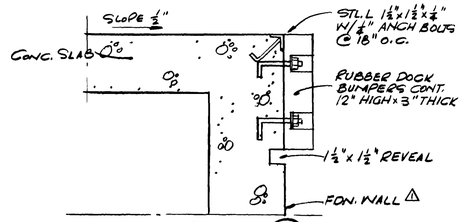

LOADING DOCK (A-1/1)
SCALE: 1 1/2" = 1'-0"

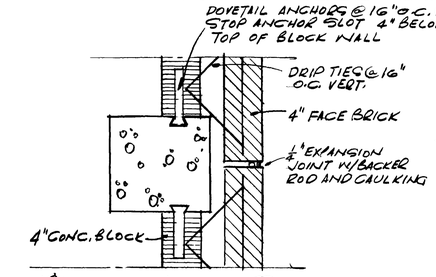

EXPANSION JOINT (A-1/2)

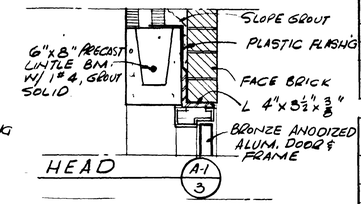

HEAD (A-1/3)

FINISH SCHEDULE

NO.	DESCRIPTION	FLOOR	BASE	WALLS A	WALLS B	WALLS C	WALLS D	CEILING MATERIAL	CEILING HEIGHT	REMARKS
1	MOTOR ROOM	CONC	–	C.M.U.	C.M.U.	C.M.U.	C.M.U.	CONC	18'-10"	
2	SCREEN ROOM	CONC	–	C.M.U	C.M.U.	C.M.U.	C.M.U.	CONC	18'-10"	
3	TOILET ROOM	CT	CT	C.M.U.	C.M.U	C.M.U.	C.M.U.	CONC	18'-10	
4	AIR PLENUM	CONC	–	C.M.U	WALL LOUVERS	–	C.M.U	CONC.	18 10'	

DOOR SCHEDULE

NOTE: EXTERIOR DOORS, FRAMES & LOUVERS ONLY BRONZE ANODIZED ALUM.

No	DOOR OPENING	TYPE	MATERIAL	DETAILS (SHT. A-2) HEAD	JAMB	SILL	LOUVER SIZE	HARDWARE GROUP	REMARKS
1	3'-4" x 10'-0"	B	ALUM	A-1/3, A-2/7	A-2/8	A-2/9	–	5	7'-0" OR W/ FIXED ALUM PNL ABOVE
2	10'-4 1/2" x 10'-0"	A	ALUM.	A-2/18	A-2/19,20	A-2/21	–	–	CHAIN OPERATED ROLL-UP DR (VERIFY WIDTH)
3	10'-4" ± x 10'-0"	A	ALUM	A-2/18	A-2/19-20	A-2/21	–	–	CHAIN OPERATED ROLL-UP DR (VERIFY WIDTH)
4	3'-4" x 10'-0"	B	ALUM	A-1/3, A-2/7	A-2/8	A-2/9	–	5	7'-0" OR W/ FIXED ALUM. PNL. ABOVE
5	3'-4" x 7'-2"	C	ALUM	A-2/18	A-2/16	A-2/17	12" x 24	4	
6	2'-4" x 7'-2"	C	ALUM	A-2/15	A-2/16, 32	A-2/17	–	3	

INDICATION LEGEND

	FACE BRICK
	CONCRETE
	8" C.M.U.
	4" FACE BRK ON 4" C.M.U.

ABBREVIATION LEGEND

ALUM.	ALUMINUM	TEXT.	TEXTURED
CONC	CONCRETE	PNL	PANEL
CMU	CONCRETE MASONRY UNIT	WDW	WINDOW
R.L	RAIN LEADER	MH	MANHOLE
R.D	ROOF DRAIN	CT	CERAMIC TILE

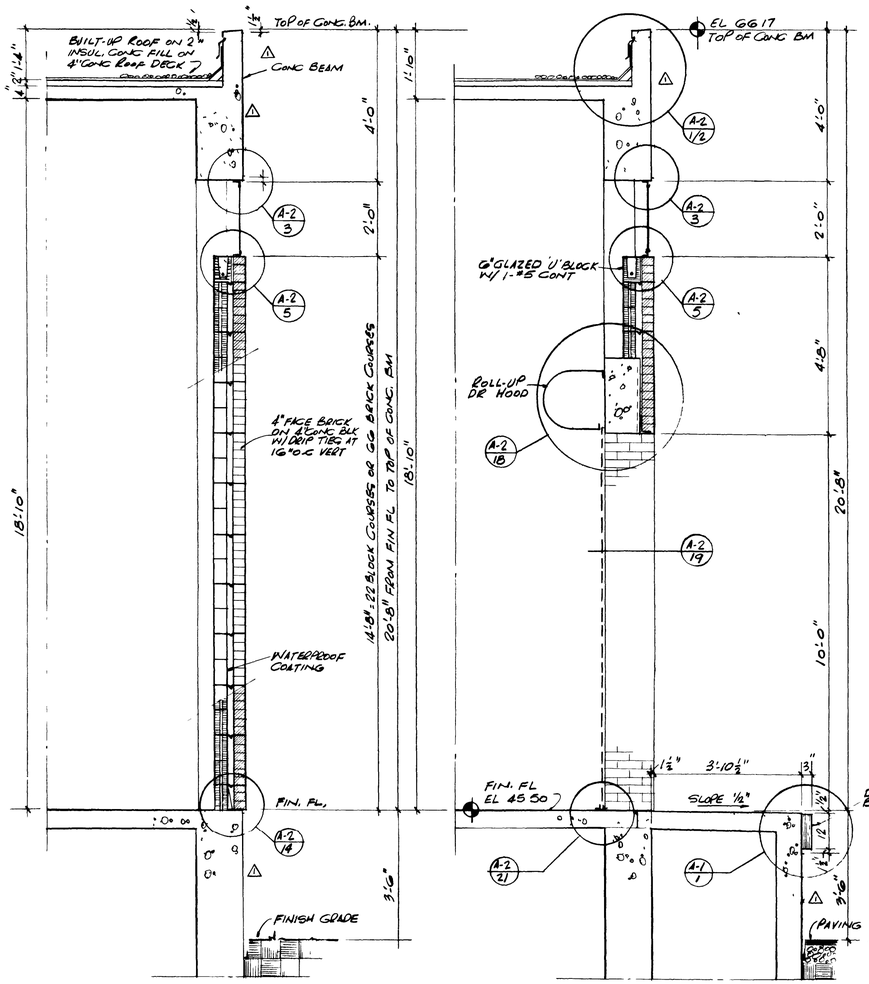

A/A-1 WALL SECTIONS B/A-1
SCALE: 1/4" = 1'-0"

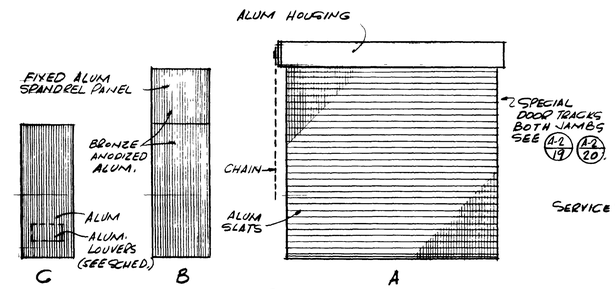

DOOR TYPES
NOT TO SCALE

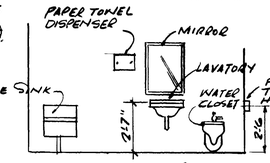

TOILET ROOM
ELEV. 'C'

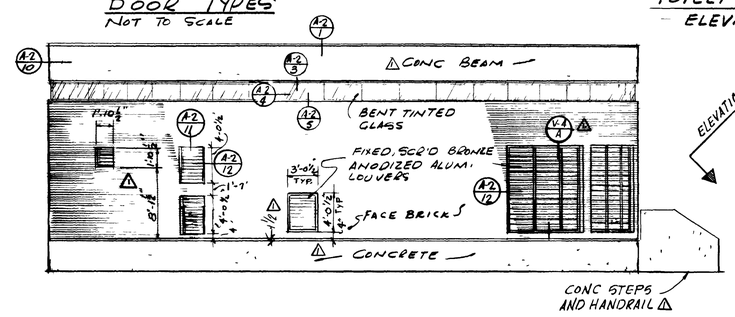

ELEVATION 'B' SCALE: 1/8" = 1'-0"

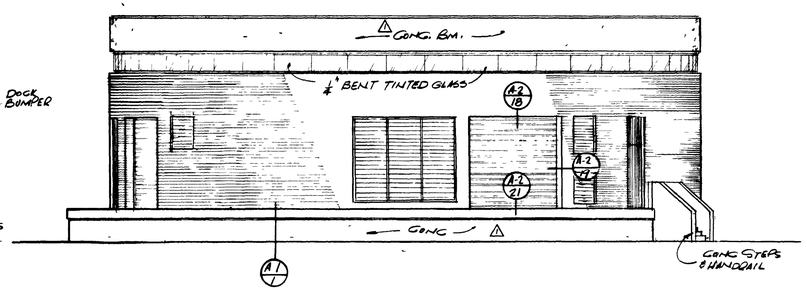

ELEVATION 'A' SCALE: 1/8" = 1'-0"

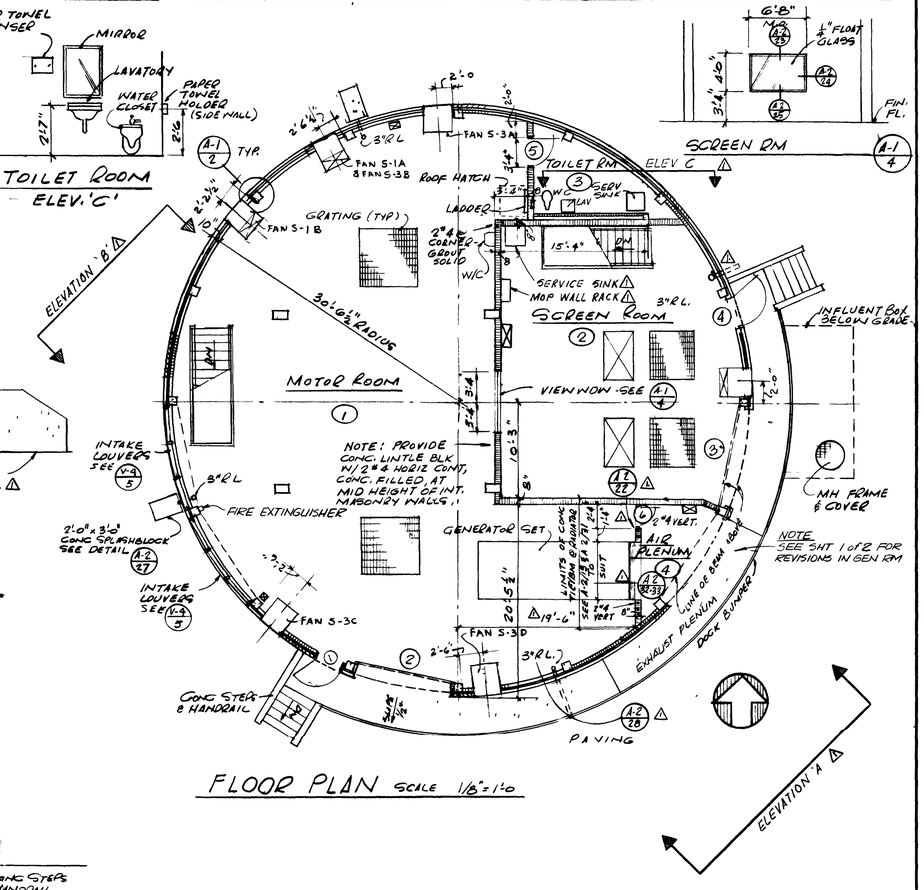

FLOOR PLAN SCALE 1/8" = 1'-0

AS BUILT OCT. 1981

12935

A-1

NO	DESCRIPTION	BY	FIRM	DATE	S&P	DATE	PW	DATE
1	PRE BID REVISION	JB	FEH	11-77	[illegible]	3/1/78	JHH	3/24/78
	REVISIONS	SUBMITTAL			APPROVAL			

SUBMITTED BY [signature]
REG ENGR FLA NO 6847 DATE 9/76
FLOOD & ASSOCIATES INC
APPROVAL RECOMMENDED BY [signature]
REG ENGR FLA NO 14820 DATE 3 28 78
SVERDRUP & PARCEL AND ASSOCIATES, INC

APPROVED BY
REG ENGR FLA NO ____ DATE ____
WATER AND SEWER DIVISION
AUTHORIZED BY [signature]
REG ENGR FLA NO 14220 DATE 3/30/78
OFFICE OF DIRECTOR OF PUBLIC WORKS
CITY OF JACKSONVILLE, FLORIDA

CITY OF JACKSONVILLE, FLORIDA

SEWERAGE IMPROVEMENT PROGRAM
ST JOHNS BLUFF
MASTER PUMPING STATION

FLOOD & ASSOCIATES, INC.
DESIGN CONSULTANT
SVERDRUP & PARCEL AND ASSOCIATES, INC — GENERAL CONSULTANT

DETAILED BY JAB SCALE AS SHOWN DATE SEPT 1976
CHECKED BY BAB

PLAN, ELEVATIONS & SECTIONS

CONTR NO JS 407 PROJ NO 7316 SHEET NO 41 OF 42

K&E 19 1253 1 78 IMC 4405-

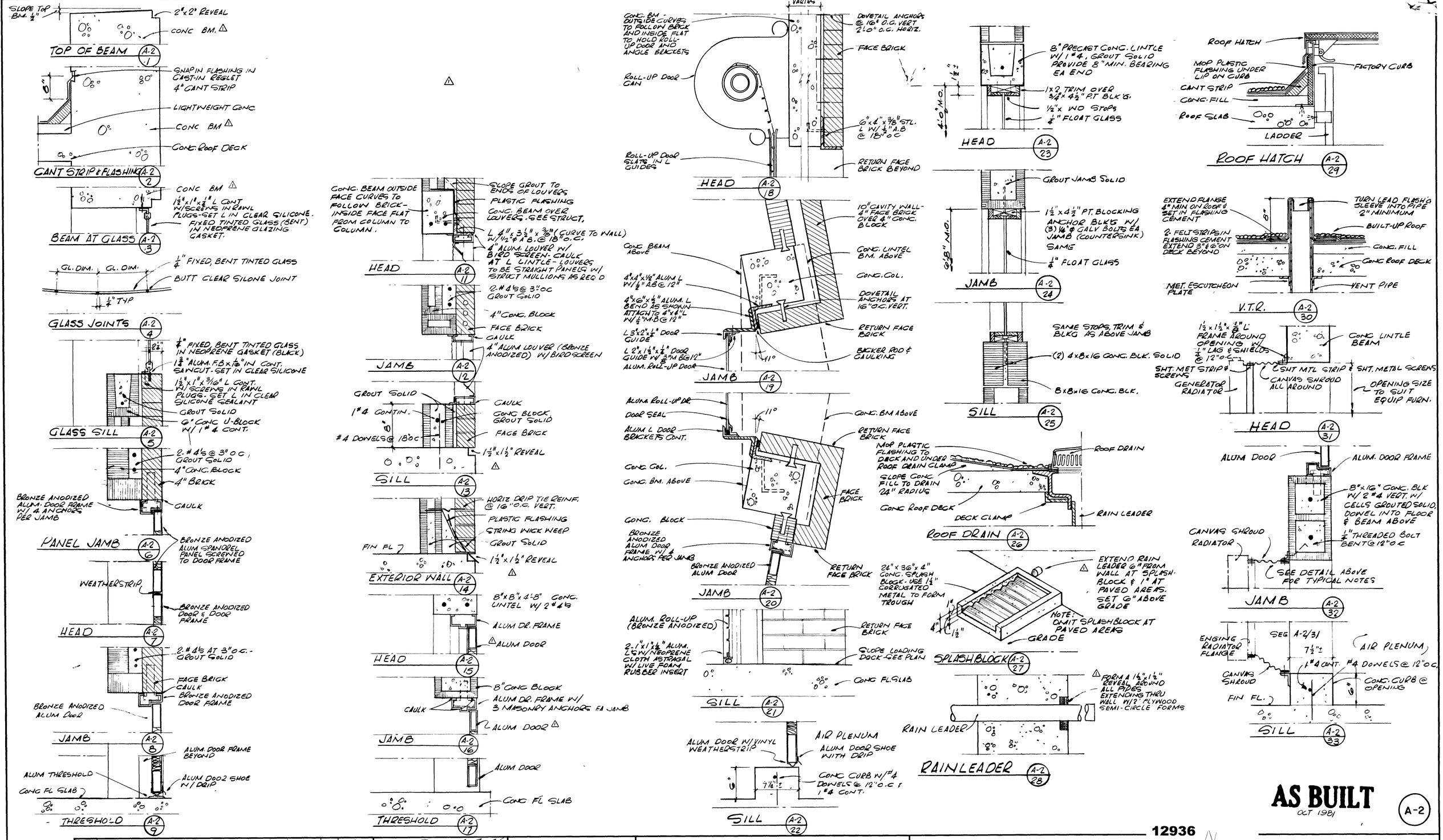

AS BUILT
OCT 1981

A-2

12936

NO	DESCRIPTION	BY	FIRM	DATE	S&P	DATE	PW	DATE
1	PRE-BID REVISIONS							
	REVISIONS	SUBMITTAL			APPROVAL			

SUBMITTED BY: James S. Engelhardt
REG ENGR FLA NO 6847 DATE 9/76
FLOOD & ASSOCIATES INC

APPROVAL RECOMMENDED BY: Harry C. Phillips
REG ENGR FLA NO 14924 DATE 7 28 78
SVERDRUP & PARCEL AND ASSOCIATES, INC

APPROVED BY
REG ENGR FLA NO ____ DATE ____
WATER AND SEWER DIVISION
AUTHORIZED BY: J. H. Lowe
REG ENGR FLA NO 14270 DATE 3/31/78
OFFICE OF DIRECTOR OF PUBLIC WORKS
CITY OF JACKSONVILLE, FLORIDA

CITY OF JACKSONVILLE, FLORIDA

SEWERAGE IMPROVEMENT PROGRAM
ST JOHNS BLUFF
MASTER PUMPING STATION

FLOOD & ASSOCIATES, INC.
DESIGN CONSULTANT

SVERDRUP & PARCEL AND ASSOCIATES, INC — GENERAL CONSULTANT

DETAILED BY J A B | SCALE AS SHOWN | DATE SEPT 1976
CHECKED BY B A B

DETAILS

CONTR NO JS 407 | PROJ NO 7316 | SHEET NO 42 OF 42

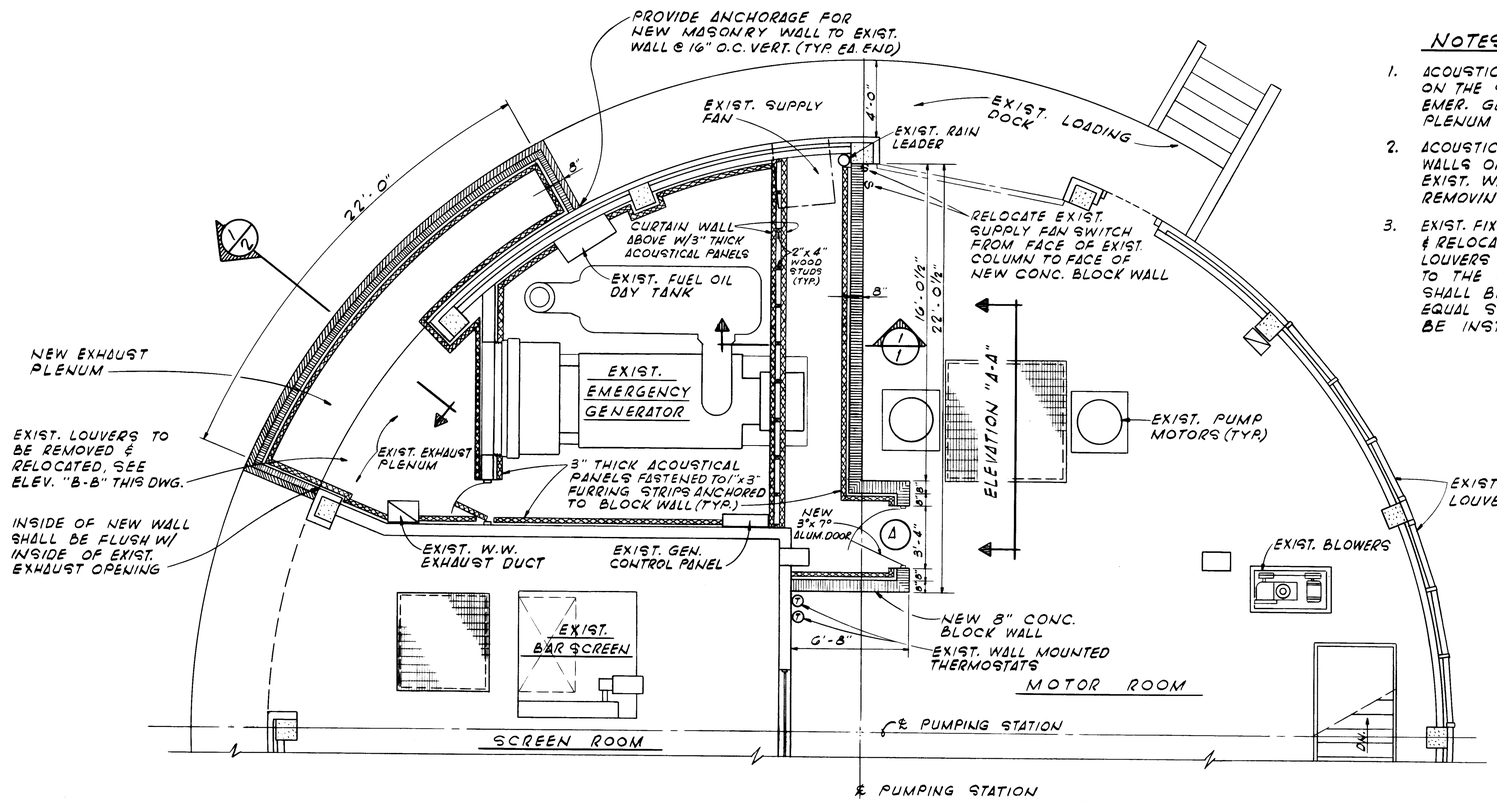

PARTIAL GROUND FLOOR PLAN

SCALE: 1/4" = 1'-0"

NOTES:

1. ACOUSTICAL PANELS SHALL BE INSTALLED ON THE SOFFIT OF THE ROOF SLAB IN THE EMER. GENERATOR ROOM, EXIST. EXHAUST PLENUM & NEW EXHAUST PLENUM.
2. ACOUSTICAL PANELS SHALL BE AFFIXED TO THE WALLS OF THE EMER. GENERATOR ROOM AROUND EXIST. WALL MOUNTED EQUIPMENT WITHOUT REMOVING OR RELOCATING EXIST. EQUIPMENT
3. EXIST. FIXED BLADE EXHAUST LOUVERS SHALL BE REMOVED & RELOCATED AS SHOWN. THE EXIST. GRAVITY LOUVERS SHALL BE REMOVED & TURNED OVER TO THE OWNER. THE FIXED BLADE LOUVERS SHALL BE FIELD CUT VERTICALLY IN TWO EQUAL SECTIONS. THE TWO SECTIONS SHALL BE INSTALLED AS DETAILED.

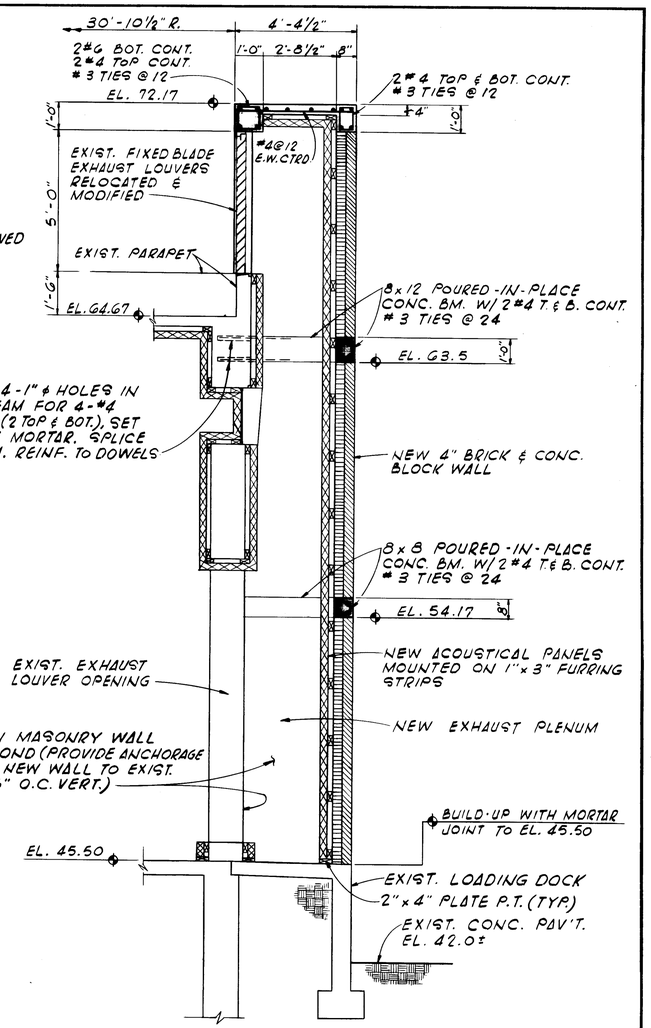

SECTION 1/2

SCALE: 3/8" = 1'-0"

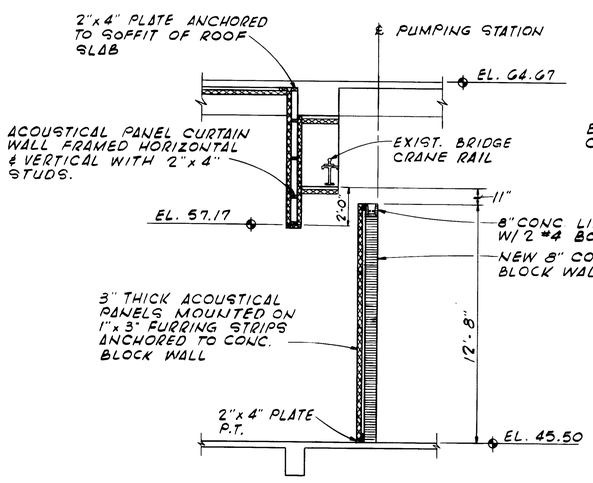

SECTION 1/1

SCALE: 1/4" = 1'-0"

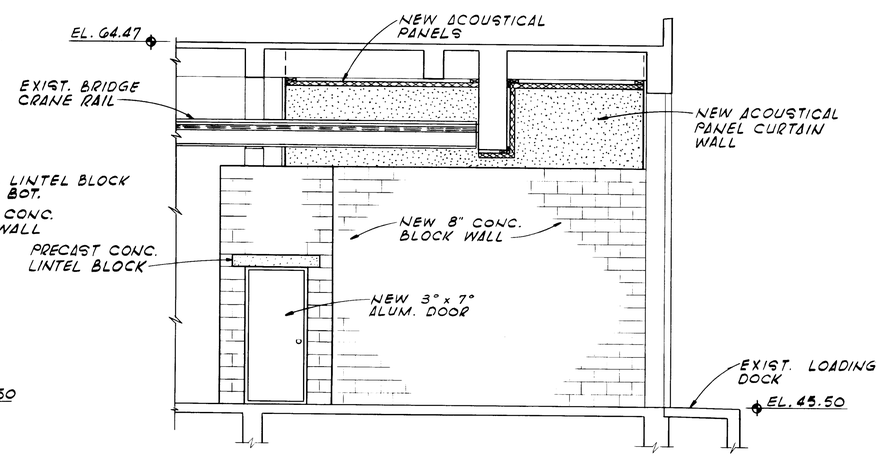

ELEVATION "A-A"

SCALE: 1/4" = 1'-0"

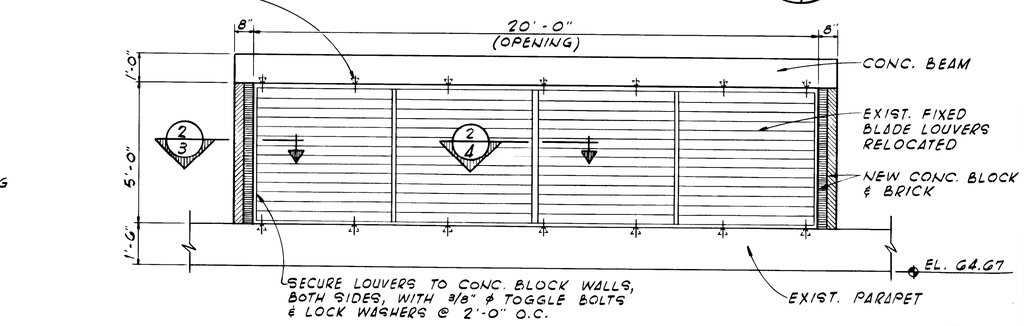

ELEVATION "B-B"

SCALE: 3/8" = 1'-0"

AS BUILT

OCT. 1981

1

NO.	DESCRIPTION	BY	FIRM	DATE	DATE	PW	DATE
	REVISIONS	SUBMITTAL			APPROVAL		

SUBMITTED BY: Lewis W. Southard
REG. ENGR. FLA. NO. 5964 DATE 8/80
FLOOD & ASSOCIATES, INC.

APPROVED BY:
REG. ENGR. FLA. NO. ____ DATE ____
WATER AND SEWER DIVISION
AUTHORIZED BY:
REG. ENGR. FLA. NO. 4224 DATE 8/26/81
OFFICE OF DIRECTOR OF PUBLIC WORKS
CITY OF JACKSONVILLE, FLORIDA

CITY OF JACKSONVILLE, FLORIDA

SEWERAGE IMPROVEMENT PROGRAM

ARLINGTON EAST DICTRICT
ST. JOHNS BLUFF MASTER PUMPING STATION

FLOOD & ASSOCIATES, INC.
DESIGN CONSULTANT

12937

N

PARTIAL GROUND FLOOR PLAN, SECTIONS AND ELEVATIONS

DETAILED BY: K.H. | SCALE AS SHOWN | DATE AUGUST, 1980
CHECKED BY: J.P.V.

CONTR. NO. JS. 40.71 | PROJ. NO. 7316-3 | SHEET NO. 1 OF 2

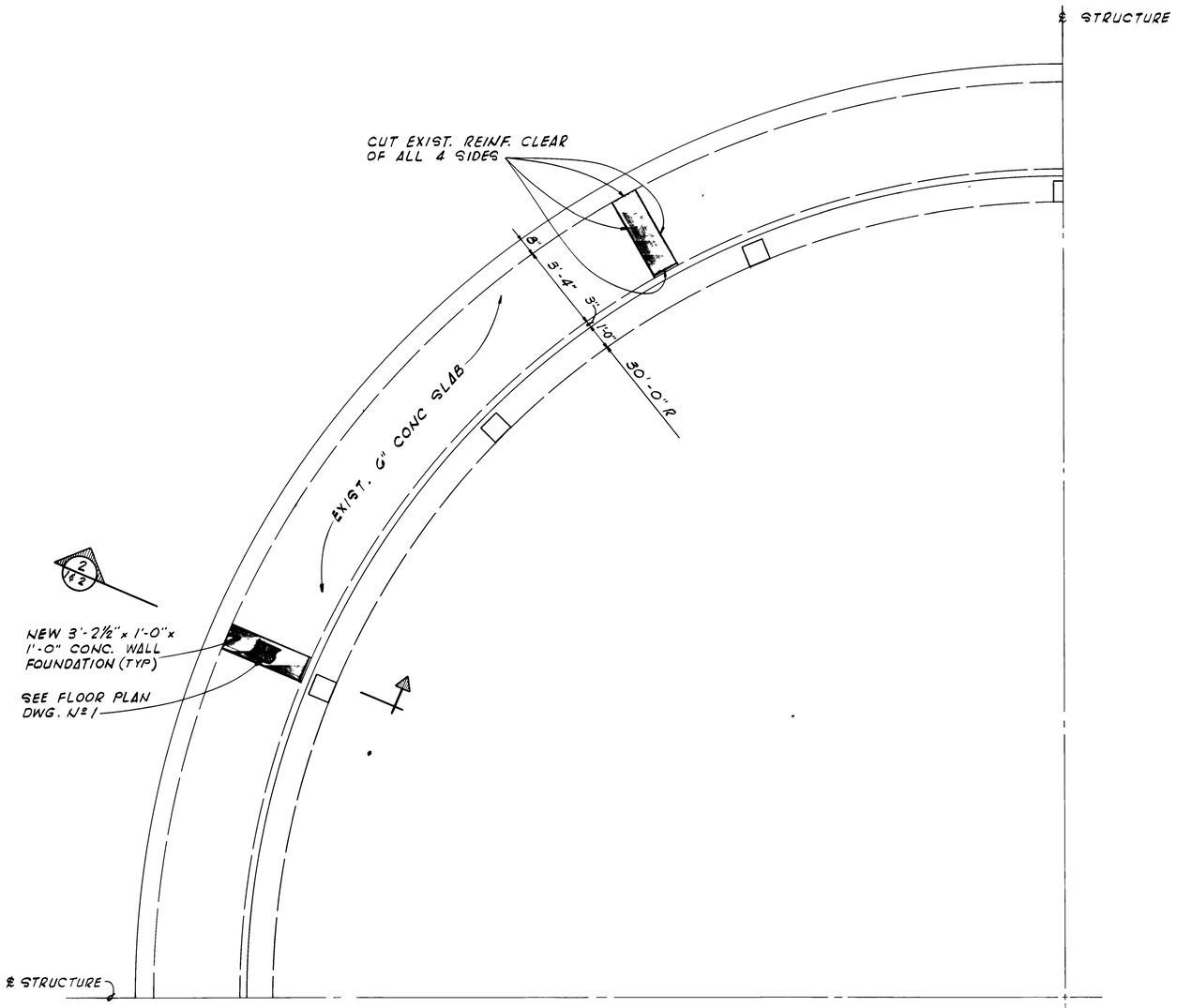

PARTIAL PLAN SECTION
SCALE: 3/8" = 1'-0"

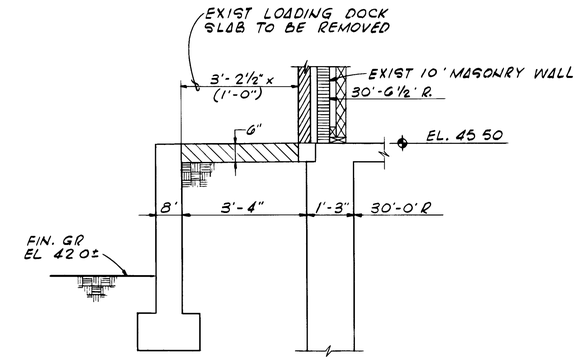

EXIST. SECTION 2/1
SCALE: 1/2" = 1'-0"

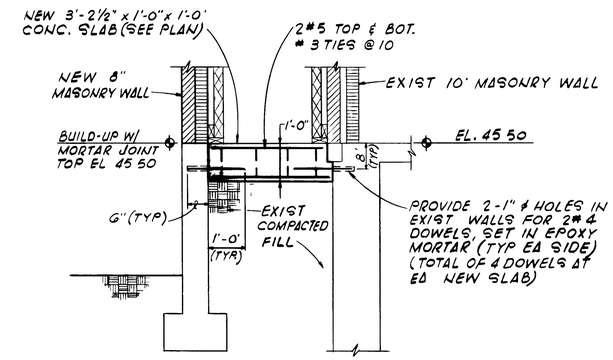

SECTION 2/2
SCALE 1/2" = 1' 0"

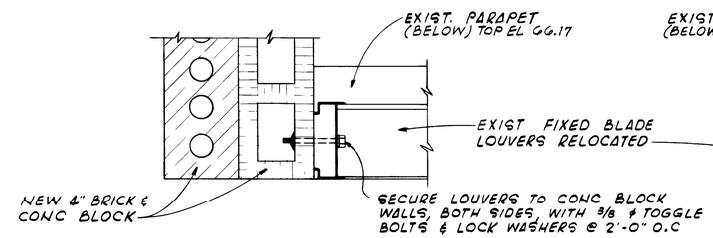

JAMB 2/1|3
SCALE: 3" = 1'-0"

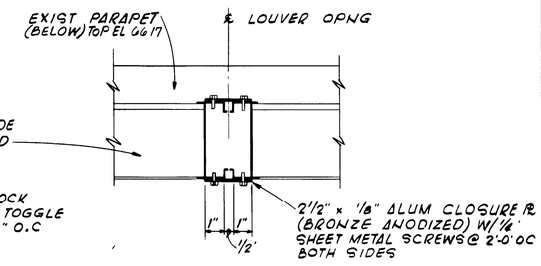

MULLION 2/1|4
SCALE: 3" = 1'-0"

AS BUILT OCT. 1981

2

NO	DESCRIPTION	BY	FIRM	DATE		DATE	PW	DATE
	REVISIONS	SUBMITTAL			APPROVAL			

SUBMITTED BY [signature]
REG ENGR FLA NO 5964 DATE 8/80
FLOOD & ASSOCIATES INC

APPROVED BY
REG ENGR FLA NO ____ DATE ____
WATER AND SEWER DIVISION
AUTHORIZED BY [signature]
REG ENGR FLA NO 4276 DATE 8/26/81
OFFICE OF DIRECTOR OF PUBLIC WORKS
CITY OF JACKSONVILLE FLORIDA

CITY OF JACKSONVILLE, FLORIDA

SEWERAGE IMPROVEMENT PROGRAM

ARLINGTON EAST DICTRICT
ST JOHNS BLUFF MASTER PUMPING STATION

FLOOD & ASSOCIATES, INC.
DESIGN CONSULTANT

12938

DETAILED BY K.H. | SCALE AS SHOWN | DATE AUGUST, 1980
CHECKED BY J.P.V.

PARTIAL PLAN SECTION, SECTIONS AND DETAILS

CONTR NO JS 40 71 | PROJ. NO 7316-3 | SHEET NO 2 OF 2