CONSTRUCTION DRAWINGS FOR ARLINGTON WATER TREATMENT PLANT HIGH SERVICE PUMP REPLACEMENT

CITY OF JACKSONVILLE NOTES

GENERAL

All construction shall be performed in accordance with the approved plans and comply with all standard city policies and practices. City approval is contingent upon any required state or federal permit approvals such as those from the Department of Environmental Protection or the St. Johns River Water Management District (SJRWMD).

UTILITY WORK

Plan approval through Development Services does not include utilities. Proposed water, sewer or electric construction must be approved separately through the respective utility company. In most cases, this will be:

JEA
JEA Tower - 4th Floor
21 W. Church Street
Jacksonville, FL 32202
http://www.jea.com/business/services/devandbuild/developers.asp

WORK WITHIN THE RIGHT-OF-WAY

CITY: Except for new subdivision infrastructure construction, all work performed within a City of Jacksonville right-of-way or easement requires a Right-of-way Permit. The contractor performing the proposed work must have a current Right-of-way Bond on file with Development Services. Right-of-way Permit applications are processed at:

Development Services Customer Service Counter
Edward Ball Building, 2nd Floor
214 N. Hogan St.
Jacksonville, FL 32202
(904) 255-8572
http://row.jaxdev.info/

STATE: All work performed within a state right-of-way requires a permit from the Florida Department of Transportation (FDOT). It is the developer's responsibility to obtain required FDOT permits or maintenance-of-traffic approvals for work within FDOT right-of-ways. The FDOT regional office can be contacted at (904) 360-5200 Any changes to the approved plans needed for FDOT approval must be submitted to Development Services as revisions.

Adjacent State Roads: _____

RAILROAD: Railroad companies may require special approvals or permits to work within their right-of-ways. It is the developer's responsibility to obtain permission from any railroad right-of-way owner before performing any work within their right-of-way.

STORMWATER

Annual reports in compliance with the SJRWMD stormwater permits are required from the maintenance entity of all stormwater management facilities. Send copies of the reports to:

Engineering and Construction Management
Edward Ball Building, 10th Floor
214 N. Hogan St.
Jacksonville, FL 32202
http://www.coj.net/Departments/Public+Works/Engineering+and+Construction+Management/

The owner of any project one (1) acre or larger is required to provide a Notice of Intent (NOI) in accordance with criteria set forth in the city's NPDES permit within 48 hours of beginning construction. Send NOI and NOI fee to:

Florida Department of Environmental Protection
NPDES Stormwater Notices Center, Mail Station #2510
2600 Blair Stone Road
Tallahassee, Florida 32399-2400
(866) 336-6312
http://www.dep.state.fl.us/water/stormwater/npdes/

The contractor shall contact the Environmental Quality Division, Erosion and Sedimentation Control Section (ESC) to provide verification that applicable stormwater permits have been obtained and to schedule a pre-construction ESC site inspection:

Environmental Quality Division
407 North Laura Street, Third Floor
Jacksonville, FL, 32202
(904) 255-7222

FIRE MARSHALL

Plan review and approval does not relieve the contractor of complying with all applicable State Fire Codes.

Underground mains and hydrants shall be installed, completed, and in service prior to construction work.

Underground contractor shall submit to the Fire Marshall for approval complete specs for all underground pipe and fittings relating to fire protection PRIOR to installation and inspection. Contractor shall include manufacturer's name and pipe ID along with contractor's state license number.

LANDSCAPE

A Site Work Permit is required for this project.

☐ Tree Fund payment is due: _____ inches at $_____ = $_____

☐ Article 25 funds are due: _____ inches at $_____ = $_____

TRAFFIC ENGINEERING

TRAFFIC SIGNS

Metro Name (each) _____

Standard (each) _____

Stop/Yield (each) _____

Design (per plat) 1 per plat

Installation (per hour) 1 per 2 signs (rounded up)

____ Streetlights Required

NOTE: Traffic sign costs change from time to time. Consult Attachment 8 of the Land Development Procedures Manual (http://ldpm.jaxdev.com/) for the current rates before paying for any sign installations.

No lane closures allowed from 7 a.m. till 9 a.m. and from 4 p.m. till 6 p.m.

PREPARED FOR:

JEA sm

Building Community sm

FEBRUARY 2017

JEA PROJECT NO.: 8003595

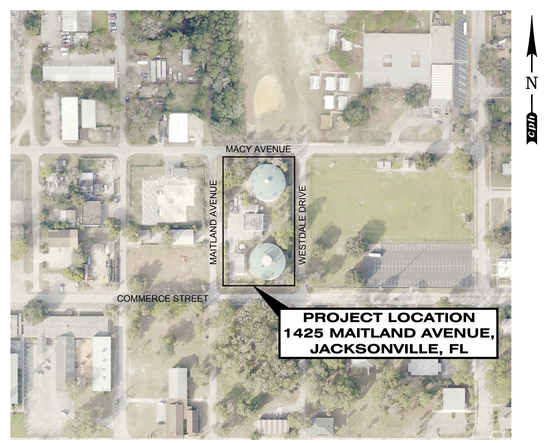

VICINITY MAP

SCALE: 1" = 200'

cph — A Full Service A & E Firm
www.cphcorp.com
Architects, Engineers, Environmental, Landscape Architects, M / E / P, Planners, Structural, Surveyors, Traffic/Transportation
5200 Belfort Road, Suite 220 Jacksonville, FL 32256
Phone: 904.332.0999
Licenses:
Eng. C.O.A. No. 3215 Arch. Lic. No. AA2600926
Survey L.B. No. 7143 Landscape Lic. No. LC0000298

IFB BID NO.: 090-17

BID DUE DATE: 5-23-17

TIME OF RECEIPT: 12:00 PM

TIME OF OPENING: 2:00 PM

BID PLACE: 21 W. CHURCH STREET
TOWER LOBBY, SUITE 103
JACKSONVILLE, FLORIDA

PLAN APPROVAL

_____ Date _____ Development Services Division (Chief)

_____ Date _____ Review Group (Reviewer)

Plan approval is valid for five years after the initial approval date. Revisions made after the initial approval date do not extend this five-year time frame.

PLAN APPROVAL IS SUBJECT TO THE FOLLOWING NOTES AND CONDITIONS:

GENERAL	
City Development Number	N/A
Concurrency Application Number	N/A
Property Appraiser Number (RE #)	141461-0000
Zoning Designation	PBF-1
Zoning Application(s) (if any)	N/A
PUD Ordinance Number	N/A
FIRM – Community – Panel	12031 C0378 H
Flood Zones (Show in Plans)	X
Base Flood Elev. (Show in Plans)	N/A
Vertical Datum Used for Project	NAVD '88
JEA Availability Number	N/A
SUBDIVISION	
PSD Number	N/A
City or Private Inspection	N/A
Public or Private Roads	N/A
Subdivision ("911") Disk Provided?	N/A
NON-SUBDIVISION	
North American Industry Classification System (NAICS)	221310
Impervious Area (Sq. Ft.)	N/A

NO.	BY	DATE	REVISIONS
6			
5			
4			
3			
2			
1			

DESIGN ENGINEER
NATALIE A. URICK
FLORIDA REGISTRATION NO. 67740

DESIGNER: NAU
DRAWN BY: DLS
DATE: FEBRUARY 2017
CHECKED BY: DEM
DATE: FEBRUARY 2017

JEA sm Building Community sm

ARLINGTON WATER TREATMENT PLANT
HIGH SERVICE PUMP REPLACEMENT

PROJ. NO. J6606
DATE: FEBRUARY 2017
SCALE: NONE

NO. SHEETS 25
SHEET NO. 1
DRAWING NO. G-01

J:\J6606\Civil\DWG\Design\1_J6606_G-1 Cover and Legend.dwg Current Layout Tab = G-01 COJ Thu Apr 27, 2017 - 15:48
Images Attached = U:\J6606\DP2013_NC-1190QL_L4
Xrefs Attached=

SURVEY AND LOCATE DATA:

1. ALL ELEVATIONS ARE BASED ON AS-BUILT AND RECORD DRAWINGS PROVIDED BY JEA.
2. CONTRACTOR TO ESTABLISH SURVEY CONTROL PRIOR TO CONSTRUCTION ACTIVITIES LOCATED AT THE INTERSECTION OF MAITLAND AVENUE AND COMMERCE STREET AND AT THE INTERSECTION OF WESTDALE DRIVE AND COMMERCE STREET.
3. LOCATION OF EXISTING UTILITIES SHALL BE OBTAINED BY CONTRACTOR USING LEVEL A DESIGNATION SOFT DIG LOCATES PRIOR TO CONSTRUCTION OF WATER MAIN REPLACEMENTS.
4. EXISTING WATER AND SEWER LINES ARE SHOWN AS PER AS-BUILT PLANS.
5. ALL PIPE LENGTHS SHOWN ON PLAN AND PROFILES ARE ALONG THE CENTER LINE OF FORCE MAINS AND WATER MAINS.
6. INVERT ELEVATIONS ON DRAWINGS REFER TO THE CENTERLINE OF MANHOLES, UNLESS OTHERWISE INDICATED.
7. THE LOCATION OF ALL EXISTING SEWER AND WATER SERVICE LINES MAY NOT BE INDICATED ON THESE PLANS.

PERMIT REQUIREMENTS (NOT ALL INCLUSIVE):

1. CONTRACTOR SHALL NOT OPEN CUT STREETS IN THE PROJECT AREA UNLESS SPECIFICALLY SHOWN ON PLANS.
2. THE CONTRACTOR IS RESPONSIBLE FOR OBTAINING A CONSUMPTIVE USE PERMIT (C.U.P.) THROUGH THE ST. JOHNS WATER MANAGEMENT DISTRICT SHOULD DEWATERING ACTIVITIES BE REQUIRED.
3. ALL WORK SHALL BE IN ACCORDANCE WITH BID DOCUMENTS, JEA WATER AND SEWER STANDARDS, DETAILS AND MATERIALS MANUAL, LATEST REVISION, AND CITY OF JACKSONVILLE STANDARD SPECIFICATIONS AND DETAILS AS WELL AS ALL APPLICABLE STATE AND LOCAL REGULATIONS.
4. THE CONTRACTOR SHALL NOTIFY APPLICABLE UTILITY CONTACT PERSONNEL NOT LESS THAN ONE WEEK PRIOR TO CONSTRUCTION OF FACILITIES IN THEIR RESPECTIVE AREAS.
5. THE CONTRACTOR SHALL LOCATE THE DRAINAGE INLET STRUCTURES IN THE PROJECT AREA AND ERECT SEDIMENTATION CONTROL DEVICES AS NECESSARY PER THE CITY OF JACKSONVILLE STORMWATER POLLUTION PREVENTION PLAN REQUIREMENTS.

EXISTING UTILITY PROTECTION:

1. THE CONTRACTOR SHALL PREVENT DAMAGES TO EXISTING UTILITIES CAUSED BY HIS WORK THROUGH FIELD VERIFICATION OF THE LOCATION OF THE EXISTING UTILITIES. IN THE CASE OF OPEN EXCAVATION, VERIFICATION MAY BE PERFORMED DURING THE CONTRACTORS WORK. IN THE CASE OF DIRECTIONAL DRILLING, VERIFICATION SHALL TAKE PLACE PRIOR TO MOBILIZATION OF THE DRILLING EQUIPMENT.
2. THE CONTRACTOR SHALL VERIFY THE LOCATION OF EXISTING UTILITIES AS NEEDED TO AVOID CONTACT. EXISTING UTILITIES SHALL BE EXPOSED USING DETECTION EQUIPMENT OR OTHER ACCEPTABLE MEANS. SUCH METHODS MAY INCLUDE BUT SHALL NOT BE LIMITED TO "SOFT DIG" EQUIPMENT AND GROUND PENETRATING RADAR (GPR). THE EXCAVATOR SHALL BE HELD LIABLE FOR DAMAGES CAUSED TO THE CITY'S/JEA'S INFRASTRUCTURE AND THE EXISTING FACILITIES OF OTHER UTILITY COMPANIES.
3. IT SHALL BE THE SOLE RESPONSIBILITY OF THE CONTRACTOR TO LOCATE AND AVOID ALL UTILITIES, OTHER STRUCTURES AND OBSTRUCTIONS BOTH ABOVE AND BELOW GROUND SURFACE. ALL DAMAGE RESULTING FROM THE CONTRACTOR'S FAILURE TO COMPLY WITH THIS REQUIREMENT SHALL BE REPAIRED AT THE CONTRACTOR'S EXPENSE.

ABBREVIATIONS:

AC	ASBESTOS CEMENT
A.C.	AIR CONDITION
ARCH	ARCHITECTURAL
℄	BASE LINE
BFV	BUTTERFLY VALVE
B.M.	BENCH MARK
C.B.	CATCH BASIN
C.I.	CAST IRON
CIP	CAST IRON PIPE
℄	CENTER LINE
C.E.P.	CITY ELECTRIC POLE
CONC.	CONCRETE
CMU	CONCRETE MASONRY UNIT
CONST.	CONSTRUCTION
C.M.P.	CORRUGATED METAL PIPE
C.M.P.A.	CORRUGATED METAL PIPE ARCH
CULV.	CULVERT
C&G	CURB & GUTTER
C	CUT
D.B.I.	DITCH BOTTOM INVERT
DIA	DIAMETER
D.W. OR DR	DRIVEWAY
D.I.	DUCTILE IRON
DIP	DUCTILE IRON PIPE
E.O.P.	EDGE OF PAVEMENT
E	EASTING/AST
EL	ELEVATION
ELEV.	ELEVATION
ENG	ENGINEER
ERCP	ELLIPTICAL REINFORCED CONC. PIPE
EXP. JT.	EXPANSION JOINT
F	FILL
F.H.	FIRE HYDRANT
FLG	FLANGE
FL	FLORIDA
FL	FLOW LINE
FM	FORCE MAIN
GPM	GALLON PER MINUTE
GALV./GLV	GALVANIZED
G	GAS LINE
GV	GATE VALVE
GSR	GROUND STORAGE RESERVOIR
HDPE	HIGH DENSITY POLYETHYLENE PIPE
H.W.	HEAD WALL
H.C.	HIGH CURB
HSP	HIGH SERVICE PUMP
HP	HORSE POWER
ID	IDENTIFICATION
IFB	ISSUED FOR BID
INJ.	INJECTION
INT.	INTERSECTION
INV.	INVERT
I.P.	IRON PIPE
J.W.W.	JACKSONVILLE WATER WORKS
JB	JUNCTION BOX
LT.	LEFT
MAT'L	MATERIAL
MB	MAIL BOX
MGO	MILLION GALLONS PER DAY
M.H.	MANHOLE
MJ	MECHANICAL JOINT
MIN	MINIMUM
N	NORTHING/NORTH
NaOCL	SODIUM HYPOCHLORIDE
N/A	NOT APPLICABLE
NO.	NUMBER
N.T.S.	NOT TO SCALE
O.E.	OVERHEAD ELECTRIC
O.T.	OVERHEAD TELEPHONE
PFD	PROCESS FLOW DIAGRAM
P.R.M.	PERMANENT REFERENCE MONUMENT
P.V.C.	POLYVINYL CHLORIDE
PP	POWER POLE
PSI	POUNDS PER SQUARE INCH
PSIG	POUNDS PER SQUARE INCH GAUGE
r	RADIUS
R	RATE
R.C.P.	
RT	RIGHT
R/W	RIGHT OF WAY
R.D.	ROOF DRAIN
S/W	SIDE WALK
S.B.T.	SOUTHERN BELL TELEPHONE
SST	STAINLESS STEEL
STA	STATION
TC	TOP OF CURVE
TYP	TYPICAL
U.G.E.	UNDERGROUND ELECTRIC
U.G.T.	UNDERGROUND TELEPHONE
U.S.C. & G.S.	UNITED STATES COASTAL & GEODETIC SURVEY
V	VALVE
V.C.	VITRIFIED CLAY
W	WEST
WM	WATER METER
W.V.	WATER VALVE
WLP	WOOD LIGHT POLE
WPP	WOOD POWER POLE
WTP	WOOD TELEPHONE POLE/WATER TREATMENT PLANT

RESTORATION NOTES:

1. THE CONTRACTOR SHALL EMPLOY A LAND SURVEYOR, REGISTERED IN THE STATE OF FLORIDA, TO REFERENCE AND RESTORE PROPERTY CORNERS AND LANDMARKS WHICH MAY BE DISTURBED BY CONSTRUCTION, KNOWN CORNER LOCATIONS ARE AVAILABLE FROM THE CITY OF JACKSONVILLE ENGINEERING DIVISION.
2. THE CONTRACTOR SHALL REPAIR ALL ASPHALT / ROADS TO THE ORIGINAL GRADES AND SLOPES.
3. SIGNS AND PAVEMENT MARKINGS SHALL BE RESTORED TO THEIR PRE-CONSTRUCTION CONDITION OR BETTER.
4. GRASS SOD SHALL BE FURNISHED AND PLACED IN THE AREAS DISTURBED OR DAMAGED BY THE CONSTRUCTION OPERATION.
5. CONTRACTOR MUST MAINTAIN AND PRESERVE NEWLY GRADED AREAS AND REPAIR AREAS WHERE SETTLING AND EROSION HAVE OCCURRED.

UTILITY CONTACTS:

A. AT&T ~ GENERAL NUMBER	904-519-2529
B. AT&T ~ ADAM DUGAN ~ NORTH DISTRICT	904-781-0741
C. AT&T ~ BILL LAKE ~ SOUTH DISTRICT	904-303-8754
D. CITY OF JACKSONVILLE ~ PUBLIC WORKS DEPT.	904-255-8762
E. CITY OF JACKSONVILLE ~ TRAFFIC OPERATIONS	904-387-8861
F. FLORIDA DEPT. OF TRANSPORTATION	904-360-5200
G. JEA ~ WATER COLLECTION & DISTRIBUTION ~ DAVID ASHLEY	904-665-8484
H. JEA ~ SEWER COLLECTION & DISTRIBUTION ~ JOSH PARKER	904-665-6052
I. JEA ~ GENERAL INFORMATION	904-665-6000
J. JEA ~ PROJECT OUTREACH	904-665-7500
K. JEA ~ POWER OUTAGES	904-665-6000
L. JEA ~ SEWER PROBLEMS	904-665-4802
M. JEA ~ WATER PROBLEMS	904-665-4801
N. JEA ~ WATER & SEWER LOCATES	904-665-8410
O. COMCAST ~ EMERGENCY HOTLINE	904-380-6274
P. TECO/PEOPLES GAS ~ BEN MOBLEY	904-545-8958
Q. SUNSHINE ONE CALL	811

GENERAL LEGEND

	EXISTING	PROPOSED
RIGHT OF WAY LINE		
CENTER LINE		
LIMITS OF CONSTRUCTION		L.O.C.
FENCE (HEIGHT & MAT'L. INDICATED)	CHAIN LINK	CHAIN LINK
DITCH OR SWALE		
DRAIN PIPE	D D	D
CATCH BASIN		
STORM DRAIN GRATE		
STORM SEWER (SIZE & MAT'L. INDICATED)	24" RCP	24" RCP
STORM SEWER, REPLACEMENT (IN CASE 10 TRENCH) SIZE, MAT'L. INDICATED		
STORM SEWER (SIZE & MAT'L. INDICATED)		
CULVERT W/ENDWALLS (SIZE & MAT'L. INDICATED)	18" CMP	18" CMP
WATER MAIN SIZE, TYPE INDICATED	W 6" PVC	W 6" PVC
WATER MAIN (IN CASE 10 TRENCH) SIZE, TYPE INDICATED		W W
GRAVITY SEWER SIZE, TYPE INDICATED	S 8" PVC	S 8" PVC
SEWER FORCE MAIN SIZE, TYPE INDICATED	FM 10" PVC	FM 10" PVC
LINE VALVE		
FIRE HYDRANT		
GATE VALVE		
END CAP		
PLUG (AT END OF LINE)		
CHECK VALVE		
REDUCER		
FLOW ARROW		
BUTTERFLY VALVE		
BALL VALVE		
FIRE HYDRANT		OR
HOUSE CONNECTION (SEWER)	HC	1275 NHC
SPOT ELEVATION	+ (100.00) OR	+ 100.00
MANHOLE - TYPE (IF INDICATED) E - ELECTRIC S - SANITARY D - STORM T - TELEPHONE		MH1
CLEAN OUT	C.O.	
SPRINKLER HEAD	SPR	
TEMPORARY SAMPLING TAP POINT (BACTERIOLOGICAL SAMPLING POINT)		SAMPLE TAP NO. TAP NO.
SILT HAY BARRIER		
SIDEWALK		

UTILITY SYMBOLS

ELECTRIC POLE OR S.B.T. POLE (WOOD)	PP OR PP (WITH LIGHT)
WOOD POWER POLE	WPP
ELECTRIC POLE OR S.B.T. POLE (CONC.)	PP OR PP (WITH LIGHT)
CONCRETE POWER POLE	CPP
GUY WIRE	
TRAFFIC SIGNAL POLE	
IRON PIPE	I.P.
OVERHEAD ELECTRIC	OHE
UNDERGROUND ELECTRIC	UGE
OVERHEAD TELEPHONE	OT
UNDERGROUND TELEPHONE	UGT
GAS MAIN (SIZE & MAT'L. INDICATED)	GAS
CABLE TELEVISION	CATV
FIBER OPTIC LINE	FO
UNDERGROUND CABLE (TYPE UNDETERMINED)	UG
WATER METER	WM M
WATER METER WITH TOUCHREAD	WM(TR)
TELEPHONE BOX	T
CATV BOX	CATV
CONCRETE MONUMENT	CM
GAS VALVE	
SOIL BORING (NUMBER INDICATED)	SB-1
SOFT DIG (NUMBER INDICATED)	SD1
TREE, SIZE & TYPE INDICATED	12" O
MAIL BOX	MB
SIGN - TYPE INDICATED	OR SIGN
BUSH, SHRUB OR HEDGE	SHRUB
FULL DEPTH ASPHALT PAVEMENT REPLACEMENT	
ASPHALT PAVEMENT OVERLAY	
INDICATES DRIVEWAY/SIDEWALK TO BE AND REPLACED	
90° BEND	
45° BEND	
22.5° BEND	
TEE	

INSTALLATION NOTES:

1. WHEN THE DISTANCE BETWEEN A POWER POLE AND THE TRENCH IS LESS THAN THE TRENCH DEPTH, THE CONTRACTOR SHALL BE RESPONSIBLE FOR COORDINATING WITH JEA ELECTRICAL PERSONNEL TO SECURE POWER POLES. THE CONTACTS FOR JEA ARE AS FOLLOWS:
   NORTHSIDE~EAST of US-1 MIKE CORBITT @ 665-7991 (mobile 662-0635)
   NORTHSIDE~WEST of US-1 ANDY YEAGER @ 665-7998 (mobile 662-0622)
   NORTHSIDE~BACKUP ALAN AINSLEY @ 665-7303 (mobile 662-6557)
   SOUTHSIDE~SOUTH of BEACH BLVD. TOM KERNS @ 665-6847 (mobile 860-1687)
   SOUTHSIDE~NORTH of BEACH BLVD. DERYL BASFORD @ 665-6855 (mobile 662-0616)
   SOUTHSIDE~BACKUP EDDIE GALES @ 665-6855 (mobile 662-0616)
   A MINIMUM OF TWO (2) WORKING DAYS NOTICE IS REQUIRED FOR AN OUTSIDE MEETING WITH JEA ELECTRICAL TO DISCUSS THE REQUIRED WORK. ADDITIONAL TIME WILL BE REQUIRED BY JEA ELECTRICAL FOR ANY REQUIRED WORK TO BE ACCOMPLISHED.
2. THE DESIGN FOR THE PROJECT IS BASED UPON THE "OPEN-CUT" METHOD OF CONSTRUCTION. IF USING ALTERNATIVE MEANS OR METHODS, THE CONTRACTOR SHALL FOLLOW ALL APPLICABLE STANDARDS FOR THOSE MEANS OR METHODS.
3. THE CONTRACTOR SHALL MINIMIZE SERVICE INTERRUPTIONS AT SERVICE CONNECTIONS. THE MEANS AND METHODS SHALL BE LEFT TO THE DISCRETION OF THE CONTRACTOR, SUBJECT TO THE REQUIREMENTS OF THE CONTRACT SPECIFICATIONS. NO EXISTING ACTIVE SERVICE SHALL BE LEFT INTERRUPTED AT THE END OF THE WORK DAY.
4. CONTRACTOR SHALL PROVIDE ADDITIONAL CORPORATION STOPS FOR FILLING AND DRAINING PURPOSES DURING CONSTRUCTION AS NEEDED. CORPORATION STOPS ARE TO BE PLUGGED AND LEFT IN PLACE. INDICATE CORPORATION STOP LOCATIONS ON RECORD DRAWINGS (AS-BUILTS).
5. IF EXISTING VALVES ARE IN UNPAVED AREAS AND ARE TO BE TAKEN OUT OF SERVICE, THEY SHALL BE CLOSED AND THE VALVE BOX AND COVER SHALL BE REMOVED. IF THE VALVES ARE UNDER PAVED AREAS, THEY SHALL BE CLOSED, THE VALVE BOX GROUT FILLED AND THE COVER REMOVED.
6. PRIOR TO COMMENCING ANY EXCAVATION OR GRADING, THE CONTRACTOR SHALL OBTAIN ALL GEOTECHNICAL AND TOPOGRAPHIC SURVEY DATA AND LOCATIONS OF ABOVE GROUND AND UNDERGROUND UTILITIES. SHOULD THE CONTRACTOR DISCOVER ANY INACCURACIES, ERRORS OR OMISSIONS IN THE SURVEY DATA, HE SHALL IMMEDIATELY NOTIFY THE DESIGN ENGINEER IN ORDER THAT PROPER ADJUSTMENTS CAN BE ANTICIPATED AND ORDERED.
7. SHEET PILING WILL BE REQUIRED ON ALL EXCAVATIONS DEEPER THAN 16 FEET.

INDEX OF DRAWINGS:

SHEET NUMBER	DRAWING NUMBER	GENERAL SHEETS
1	G-01	COVER SHEET
2	G-02	GENERAL NOTES, LEGEND, AND SHEET INDEX
3	G-03	OVERALL SITE LOCATION MAP AND PROPOSED SITE WORK
4	G-04	PFD, FLOWSTREAM ID VALVE SCHEDULE
		INSTRUMENTATION SHEETS
5	I-01	INSTRUMENTATION LEGEND
6	I-02	PROCESS AND INSTRUMENTATION DIAGRAM
7	I-03	INSTRUMENTATION DETAILS
		MECHANICAL SHEETS
8	M-01	SITE DEMOLITION PLAN
9	M-02	HIGH SERVICE PUMPS PLAN
10	M-03	HIGH SERVICE PUMP SECTIONS
11	M-04	MECHANICAL DETAILS
12	M-05	MECHANICAL DETAILS
		HVAC SHEETS
13	M-06	MECHANICAL ABBREVIATIONS AND GENERAL NOTES
14	M-07	HVAC PLAN
		ELECTRICAL SHEETS
15	E-01	NOTES, SYMBOLS & ABBREVIATIONS
16	E-02	ELECTRICAL SITE PLAN
17	E-03	DEMOLITION SINGLE LINE
18	E-04	PROPOSED SINGLE LINE DIAGRAM
19	E-05	MCC FRONT VIEWS
20	E-06	ELEMENTARY CONTROL DIAGRAMS
21	E-07	CONTROL WIRING RISER DIAGRAMS
22	E-08	ELECTRICAL BUILDING PLAN
23	E-09	ELECTRICAL DEMOLITION PLAN
24	E-10	HIGH SERVICE PUMP BUILDING PLAN
25	E-11	PANEL SCHEDULES
26	E-12	ELECTRICAL DETAILS

DRAWING NUMBER	SHEET TITLE
REFERENCE DRAWINGS	
W-STD-1	WATER MAIN DETAILS
W-STD-2	WATER MAIN DETAILS

NOTE:

STANDARD DRAWINGS ARE APPLICABLE FOR ALL PROJECTS, INCORPORATED BY REFERENCE AND ARE AVAILABLE AT JEA.COM

gph
www.gphcorp.com
A Full Service A & E Firm
5200 Belfort Road Jacksonville, FL 32256
Phone: 904.332.3999
Licenses:
Eng. C.O.A. No. 3215 Arch. Lic. No. AA0600926
Survey L.B. No. 7143 Landscape Lic. No. LC0600298

NO.	BY	DATE	REVISIONS
6.	X	X	X
5.	X	X	X
4.	X	X	X
3.	X	X	X
2.	X	X	X
1.	X	X	X

DESIGN ENGINEER
NATALIE A. URICK
FLORIDA REGISTRATION NO. 67740

DESIGNER:	NAU
DRAWN BY:	DAS
DATE:	FEBRUARY 2017
CHECKED BY:	DEM
DATE:	FEBRUARY 2017

JEA Building Community

ARLINGTON WATER TREATMENT PLANT
HIGH SERVICE PUMP REPLACEMENT
GENERAL NOTES, LEGEND, AND SHEET INDEX

PROJ. NO.	J6606
DATE:	FEBRUARY 2017
SCALE:	NONE

NO. SHEETS	26
SHEET NO.	2
DRAWING NO.	G-02

U:\J6606\1 J6606_G-1 Cover and Legend.dwg Current Layout Tab = G-02 Thu Feb 23, 2017 - 16:45
Xrefs Attached=

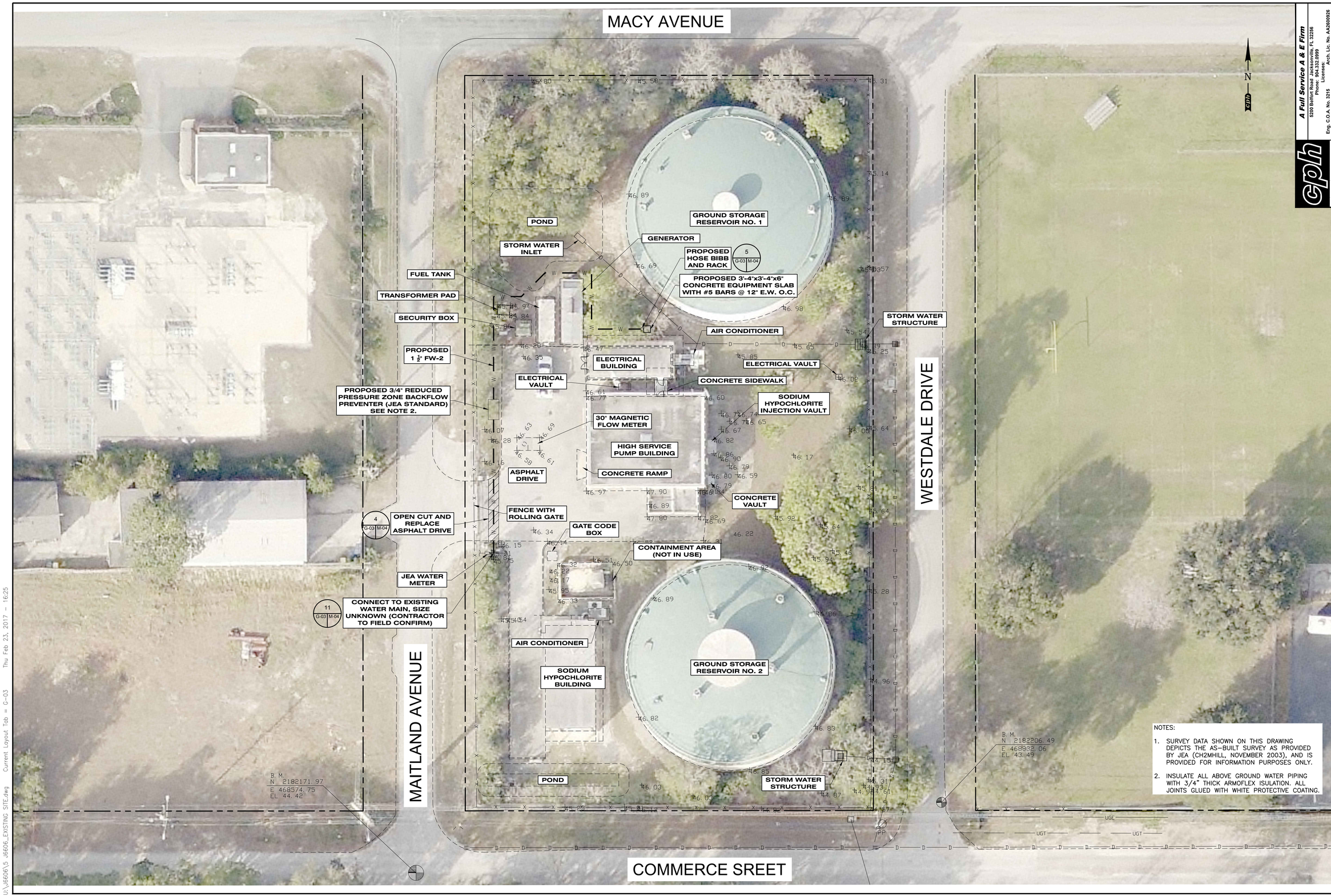

NOTES:

1. SURVEY DATA SHOWN ON THIS DRAWING DEPICTS THE AS-BUILT SURVEY AS PROVIDED BY JEA (CH2MHILL, NOVEMBER 2003), AND IS PROVIDED FOR INFORMATION PURPOSES ONLY.
2. INSULATE ALL ABOVE GROUND WATER PIPING WITH 3/4" THICK ARMOFLEX ISULATION. ALL JOINTS GLUED WITH WHITE PROTECTIVE COATING.

cph
A Full Service A & E Firm
5200 Belfort Road Jacksonville, FL 32256
Phone: 904.912.3999
Licensed:
Eng. C.O.A. No. 3215 Arch. Lic. No. AA26000926
Survey L.B. No. 7143 Landscape Lic. No. LC0000238
www.cphcorp.com

NO.	BY	DATE	REVISIONS
6.	X	X	X
5.	X	X	X
4.	X	X	X
3.	X	X	X
2.	X	X	X
1.	X	X	X

DESIGN ENGINEER
NATALIE A. LIRICK
FLORIDA REGISTRATION NO.
67740

DESIGNER:	NAU
DRAWN BY:	RJS
DATE:	FEBRUARY 2017
CHECKED BY:	DBM
DATE:	FEBRUARY 2017

JEA Building Community sm

ARLINGTON WATER TREATMENT PLANT
HIGH SERVICE PUMP REPLACEMENT
OVERALL SITE LOCATION MAP AND PROPOSED SITE WORK

PROJ. NO.	J6606
DATE:	FEBRUARY 2017
SCALE:	1" = 20'

NO. SHEETS	3
SHEET NO.	3
DRAWING NO.	G-03

U:\J6606\5_J6606_EXISTING SITE.dwg Current Layout Tab = G-03 Thu Feb 23, 2017 - 16:25

Xrefs Attached= arlcx00 [.\arlcx00.dwg]

FLOWSTREAM IDENTIFICATION									
ABBREVIATIONS	DESCRIPTION	MATERIAL	SPECIFICATION SECTION	INTERIOR LININIG	WORKING PRESSURE (PSIG)	TEST PRESSURE (PSIG)	TEST FLUID	EXPOSED COATING SYSTEM	COLOR
AW	AERATED WATER (EXISTING)	DI/CI	N/A	CEMENT MORTAR	N/A	N/A	N/A	N/A	N/A
DR	DRAIN (EXISTING)	PVC	N/A	CEMENT MORTAR	N/A	N/A	N/A	N/A	N/A
FW	FINISHED WATER (EXISTING)	DI/CI	N/A	CEMENT MORTAR	N/A	N/A	N/A	N/A	N/A
NaOCl	SODIUM HYPOCHLORITE (EXISTING)	PVC	N/A	N/A	N/A	N/A	N/A	N/A	N/A
RW	RAW WATER (EXISTING)	DI/CI	N/A	CEMENT MORTAR	N/A	N/A	N/A	N/A	N/A
SA	SAMPLE LINE (EXISTING)	PVC	N/A		N/A	N/A	N/A	N/A	N/A
DR-1	DRAIN (PROPOSED)	CPVC	40 20 90	N/A	<5	5	FW	N/A	N/A
FW-1	FINISHED WATER (PROPOSED)	DI	40 20 40	CEMENT MORTAR	<80	40 (SUCTION) 150 (DISCHARGE)	FW	SYSTEM NO. 7 09 90 00	BLUE
FW-2	FINISHED WATER (PROPOSED)	PVC	40 20 90	N/A	<80	150	FW	EPOXY	BLUE
NaOCl-1	SODIUM HYPOCHLORITE (PROPOSED)	POLYETHYLENE TUBE	40 20 35	N/A	<20	150	FW	N/A	N/A
NaOCl-2	SODIUM HYPOCHLORITE (PROPOSED)	PVC	40 20 90	N/A	<20	150	FW	EPOXY	YELLOW
SA-1	SAMPLE LINE (PROPOSED)	POLYETHYLENE TUBE	40 20 35	N/A	<80	150	FW	N/A	N/A
SA-2	SAMPLE LINE (PROPOSED)	SST TUBING	40 20 78	N/A	<80	150	FW	N/A	N/A
SA-3	SAMPLE LINE (PROPOSED)	PVC	40 20 90	N/A	<80	150	FW	N/A	N/A

VALVE SCHEDULE			
VALVE NO.	SIZE	TYPE	EXISTING/NEW
12V-3A	12"	GATE	NEW
12V-3B	12"	CHECK	NEW
12V-3C	12"	GATE	NEW
12V-4A	12"	GATE	NEW
12V-4B	12"	CHECK	NEW
12V-4C	12"	GATE	NEW
12V-5A	12"	GATE	NEW
12V-5B	12"	CHECK	NEW
12V-5C	12"	GATE	NEW
12V-6A	12"	GATE	NEW
12V-6B	12"	CHECK	NEW
12V-6C	12"	GATE	NEW
20V-7	20"	BUTTERFLY	NEW
20V-8	20"	BUTTERFLY	NEW
30V-9	30"	BUTTERFLY	EXISTING
30V-10	30"	BUTTERFLY	EXISTING
30V-11	30"	BUTTERFLY	EXISTING
24V-12	24"	GATE	EXISTING
24V-13	24"	GATE	EXISTING

INSTRUMENT SYMBOLS

- AE — ANALYZER ELEMENT
- AIT — ANALYZER INSTRUMENT TRANSMITTER
- FIT — FLOW INSTRUMENT TRANSMITTER
- PI — PRESSURE INDICATOR
- PIT — PRESSURE INDICATOR TRANSMITTER
- PSH — PRESSURE SWITCH HIGH
- PSL — PRESSURE SWITCH LOW

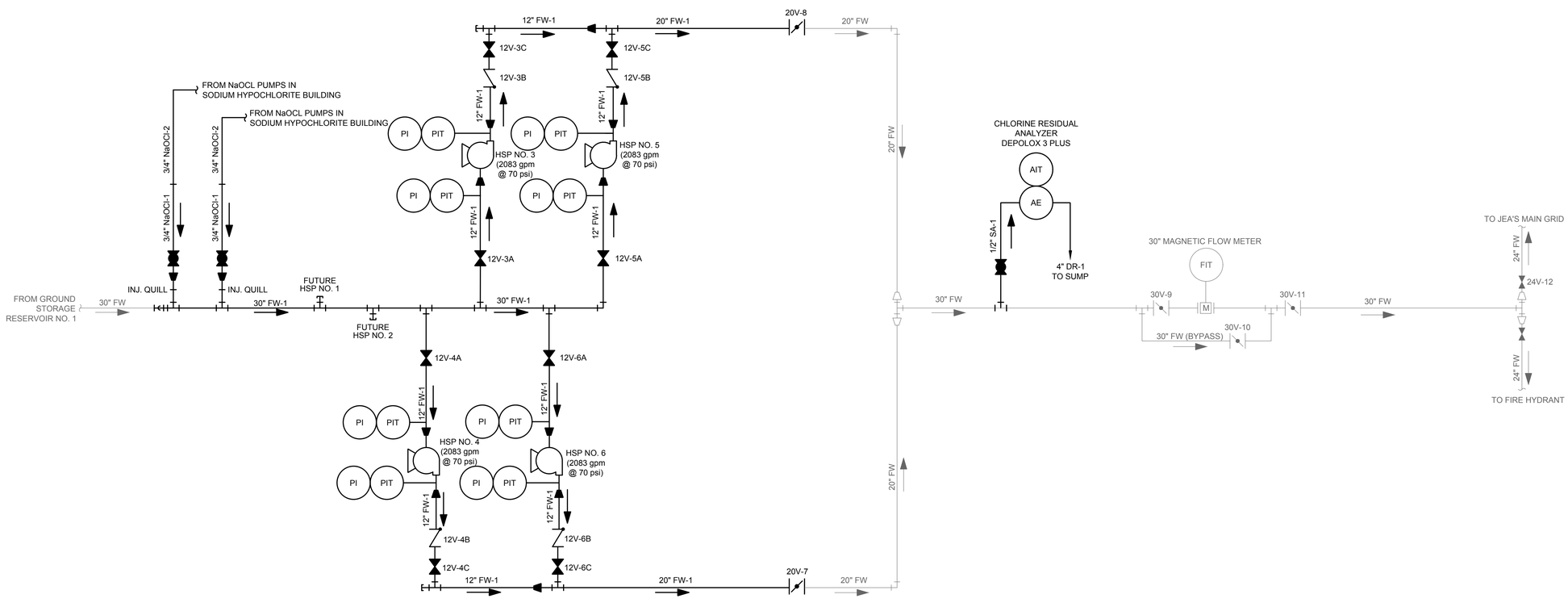

PROCESS FLOW DIAGRAM

NOT TO SCALE

NOTES:

1. PROCESS FLOW DIAGRAM REPRESENTS ONLY THE HIGH SERVICE PUMPING AND PIPING COMPONENTS MODIFIED BY THIS PROJECT.
2. TOTAL FIRM DESIGN PUMPING CAPACITY (WITH ONE PUMP OFF) IS 9 MGD.

A Full Service A & E Firm
5200 Belfort Road Jacksonville, FL 32256
Phone: 904.912.3999
Licenses:
Eng. C.O.A. No. 3215 Arch. Lic. No. AA26000526
Survey L.B. No. 7143 Landscape Lic. No. LC0000288
www.cphcorp.com

NO.	BY	DATE	REVISIONS
6.	X	X	X
5.	X	X	X
4.	X	X	X
3.	X	X	X
2.	X	X	X
1.	X	X	X

DESIGN ENGINEER
NATALIE A. LIRICK
FLORIDA REGISTRATION NO. 67740

DESIGNER: NAU
DRAWN BY: RJS
DATE: FEBRUARY 2017
CHECKED BY: DEM
DATE: FEBRUARY 2017

JEA Building Community

ARLINGTON WATER TREATMENT PLANT
HIGH SERVICE PUMP REPLACEMENT
PFD, FLOWSTREAM ID VALVE SCHEDULE

PROJ. NO. J6606
DATE: FEBRUARY 2017
SCALE: N.T.S.

NO. SHEETS 20
SHEET NO. 4
DRAWING NO. G-04

U:\J6606\6 J6606_PROCESS FLOW DIAGRAM.dwg Current Layout Tab = G-04 Thu Feb 23, 2017 - 16:25

Xrefs Attached=

GENERAL INSTRUMENT OR FUNCTION SYMBOLS

- DISCRETE INSTRUMENT – FIELD MOUNTED
- DISCRETE INSTRUMENT – PRIMARY LOCATION NORMALLY ACCESSIBLE TO OPERATOR (1)
- DISCRETE INSTRUMENT – AUXILLARY LOCATION NORMALLY ACCESSIBLE TO OPERATOR (1)
- INSTRUMENTS SHARING COMMON HOUSING
- HATCHED ITEMS INDICATE TO BE PROVIDED BY OTHERS
- (1) NORMALLY INACCESSIBLE OR BEHIND–THE–PANEL DEVICES OR FUNCTIONS MAY BE DEPICTED BY USING THE SAME SYMBOL, BUT WITH DASHED HORIZONTAL BARS.
- (I) CONTROL INTERLOCK
- (A) CONTROL SYSTEM I/O INTERFACE – ANALOG SIGNAL. DIRECTION OF TRIANGLE DENOTES WHETHER INPUT OR OUTPUT.
- (D) CONTROL SYSTEM I/O INTERFACE – DISCRETE SIGNAL. DIRECTION OF TRIANGLE DENOTES WHETHER INPUT OR OUTPUT.
- PNEUMATIC SIGNAL
- EXISTING EQUIPMENT
- FUTURE EQUIPMENT
- DIAPHRAGM SEAL
- (B) BUBBLER SYSTEM
- (P) PURGE OR FLUSHING DEVICE

PROCESS DEVICE SYMBOLS

- REDUCER OR ENLARGER
- PRIMARY ELEMENT VENTURI TUBE
- (M) PRIMARY ELEMENT MAGNETIC FLOWMETER
- PRIMARY ELEMENT ULTRASONIC DOPPLER FLOWMETER
- PRIMARY ELEMENT PARSCHALL FLUME
- PRIMARY ELEMENT ORIFICE PLATE
- PRIMARY ELEMENT WEIR FLOWMETER
- PRIMARY ELEMENT TURBINE OR PROPELLER TYPE METER
- PRIMARY ELEMENT PITOT TUBE
- PRIMARY ELEMENT ROTAMETER
- PRIMARY ELEMENT STRAP ON ULTRASONIC TRANSIT TIME METER
- PRIMARY ELEMENT STRAP ON ULTRASONIC DOPPLER METER
- (L.E. OR F.E.) PRIMARY ELEMENT ULTRASONIC FLOW OR LEVEL METER
- FLOAT SWITCH
- DRAIN
- CHEMICAL INJECTION POINT

PROCESS DEVICE SYMBOLS (CONTINUED)

- VALVE: GLOBE OR OTHER IN–LINE TYPE, UNLESS OTHERWISE INDICATED.
- BUTTERFLY VALVE
- CHECK VALVE WITH FLOW DIRECTION AS INDICATED
- PLUG VALVE
- BALL VALVE
- (REGULATED SIDE) PRESSURE REGULATING VALVE – SELF CONTAINED
- FLOW CONTROL GATE OR GATE VALVE
- CENTRIFUGAL BLOWER
- CENTRIFUGAL PUMP
- (M) SUBMERSIBLE PUMP
- (M) (RATE SET, STROKE ADJUST) DIAPHRAGM PUMP & MOTOR
- DISC FLOW OR PROGRESSIVE CAVITY PUMP
- VERTICAL PUMP
- (M) MOTOR – MAY BE ELECTRIC, HYDRAULIC, OR PNEUMATIC. ARROW DENOTES VARIABLE SPEED.

FUNCTION SYMBOLS & ABBREVIATIONS

- k PROPORTIONAL GAIN OR ATTENUATE (INPUT:OUTPUT)
- –k REVERSE PROPORTIONAL GAIN OR ATTENUATE (INPUT:OUTPUT)
- Σ SUMMING
- Σ/n AVERAGING
- Δ SUBTRACTING
- √ EXACT SQUARE ROOT
- ÷ DIVIDE
- x MULTIPLY
- S INTEGRATE
- + BIAS POSITIVE
- – BIAS NEGATIVE
- f(X) NONLINEAR OR UNSPECIFIED FUNCTION
- > HIGH SELECT
- < LOW SELECT
- HIGH LIMIT
- LOW LIMIT
- ✱/✱ SIGNAL TRANSDUCER OR CONVERTER (INPUT/OUTPUT) ✱ DEFINED AS FOLLOWS:
  - E VOLTAGE
  - H HYDRAULIC
  - I CURRENT
  - PD PULSE DURATION
  - O ELECTROMAGNETIC, SONIC
  - P PNEUMATIC
  - PD PULSE DURATION
  - R RESISTANCE (ELECTRIC)

CHEMICAL ABBREVIATIONS: (STANDARD CHEMICAL FORMULAS ARE USED)

HAND SWITCH ABBREVIATIONS:

- A AUTOMATIC
- C COMPUTER OR CLOSE
- H HAND
- L LOCAL
- M MODULATE
- O OFF OR OPEN
- R REMOTE
- S START OR STOP

OTHER ABBREVIATIONS:

- AI ANALOG INPUT
- AO ANALOG OUTPUT
- AS AIR SUPPLY
- COND CONDUCTIVITY
- CR CHLORINE RESIDUAL
- DI DIGITAL OR DISCRETE INPUT
- ES ELECTRIC SUPPLY
- FC FAIL CLOSED
- FLP FAIL LAST POSITION
- FO FAIL OPEN
- MC MOTOR CONTROLLER
- NC NORMALLY CLOSED
- PLC PROGRAMMABLE LOGIC CONTROLLER
- RTU REMOTE TERMINAL UNIT
- VFD VARIABLE FREQUENCY DRIVE

GENERAL NOTES

1. THIS IS A GENERAL LEGEND SHEET. SOME SYMBOLS & ABBREVIATIONS MAY NOT APPLY TO THIS SPECIFIC PROJECT.
2. THIS LEGEND APPLIES TO INSTRUMENTATION DIAGRAMS ONLY, & ITS SYMBOLS MAY NOT BE APPLICABLE TO NON–INSTRUMENTATION DRAWINGS.
3. THIS LEGEND SHEET & THE INSTRUMENTATION DIAGRAMS & I–DRAWINGS ARE GENERALLY BASED ON THE INSTRUMENT SOCIETY OF AMERICA'S STANDARDS FOR PRACTICES IN INSTRUMENTATION. SOME MODIFICATIONS, ADDITIONS, & ALTERATIONS MAY HAVE BEEN MADE TO ACCOMMODATE INDIVIDUAL PROJECT REQUIREMENTS.
4. SOME PROCESS ITEMS (SUCH AS EQUIPMENT ISOLATION VALVES, BYPASS LINES, ETC.) WHICH ARE NOT CRITICAL FOR AN UNDERSTANDING OF THE INSTRUMENTATION FUNCTIONS ARE NOT SHOWN ON THE INSTRUMENTATION SHEETS.
5. SEE ELECTRICAL SHEETS & SPECIFICATIONS FOR ADDITIONAL CONTROL & INTERLOCK REQUIREMENTS FOR EQUIPMENT NOT SHOWN OR NOT PROVIDED BY THE INSTRUMENTATION SUPPLIER.
6. SLANTED TEXT DENOTES EXISTING EQUIPMENT OR STRUCTURES. NON–SLANTED TEXT DENOTES NEW EQUIPMENT, STRUCTURES, & WORK. SLANTED TEXT (NOT SHADED) DENOTES FUTURE EQUIPMENT STRUCTURES & WORK.

VALVE ACTUATOR SYMBOLS

AUTOMATIC POSITIONER

✱VALVE OR GATE ACTUATOR WITH DEFINED AS FOLLOWS:

- P: AIR CYLINDER
- S: SOLENOID
- P/O: AIR/OIL CYLINDER
- E: ELECTRIC MOTOR
- H: HYDRAULIC CYLINDER
- EH: ELECTROHYDRAULIC
- Z: MISCELLANEOUS

FOR PRESSURE RELIEF OR SAFETY VALVES ONLY

MANUALLY (HAND) OPERATED

OR NO SYMBOL

TAG NUMBER & DESIGNATION EXAMPLE

LOOP NO. 1234 — TYPICAL LOOP NUMBER

CL_2 — ADDITIONAL INSTRUMENT IDENTIFICATION. SEE FUNCTION SYMBOLS & ABBREVIATIONS.

AE — INSTRUMENT ID. SEE TABLE ON RIGHT FOR SPECIFIC LETTER MEANING. EXAMPLE, AE REPRESENTS ANALYSIS ELEMENT.

A — WHEN USED, LETTER DISTINGUISHES BETWEEN MULTIPLE, SIMILAR DEVICES IN THE SAME INSTRUMENT LOOP

INSTRUMENTATION IDENTIFICATION LETTERS

	FIRST LETTER		SUCCEEDING LETTERS		
	MEASURED OR INITIATING VARIABLE	MODIFIER	READOUT OR PASSIVE FUNCTION	OUTPUT FUNCTION	MODIFIER
A	ANALYSIS		ALARM		
B	BURNER, COMBUSTION		EMERGENCY	USER'S CHOICE	USER'S CHOICE
C	USER'S CHOICE		CLEANER	CONTROL	
D	DENSITY (MASS) OR SPECIFIC GRAVITY	DIFFERENTIAL			
E	VOLTAGE (EMF)		PRIMARY ELEMENT		
F	FLOW RATE	RATIO (FRACTION)			
G	GAUGING (DIMENSIONAL)		GLASS		
H	HAND (MANUALLY INITIATED)				HIGH OR OPEN
I	CURRENT (ELECTRICAL)		INDICATE		
J	POWER	SCAN			
K	TIME OR TIME SCHEDULE			CONTROL STATION	
L	LEVEL		LIGHT (PILOT)		LOW OR CLOSED
M	USER'S CHOICE	MOMENTARY			MIDDLE OR INTERMEDIATE
N	USER'S CHOICE		USER'S CHOICE	USER'S CHOICE	USER'S CHOICE
O	USER'S CHOICE		ORIFICE (RESTRICTION)		
P	PRESSURE OR VACUUM		POINT (TEST CONNECTION)		
Q	QUANTITY	INTEGRATE OR TOTALIZE			
R	RUN		RECORD		
S	SPEED OR FREQUENCY	SAFETY		SWITCH	
T	TEMPERATURE			TRANSMIT	
U	MULTIVARIABLE		MULTIFUNCTION	MULTIFUNCTION	MULTIFUNCTION
V	VISCOSITY, VIBRATION			VALVE, DAMPER, OR LOUVER	
W	WEIGHT OR TORQUE		WELL		
X	FAILURE	X AXIS			
Y	EVENT, STATE, OR PRESENCE	Y AXIS		RELAY, COMPUTE, CONVERT	
Z	POSITION, DIMENSION	Z AXIS		DRIVE, ACTUATE, OR UNCLASSIFIED CONTROL ELEMENT	

JEA Building Community
13503 GRIFFIN ROAD, SUITE 202
COOPER CITY, FLORIDA 33330
PHONE: (954) 435–7030
CERTIFICATE OF AUTHORIZATION NO. 6579
Stephen E. Bailey, P.E.
Florida P.E. No. 42461

REVISIONS

NO.	BY	DATE
6.	X	X
5.	X	X
4.	X	X
3.	X	X
2.	X	X
1.	X	X

DESIGN ENGINEER: STEPHEN E. BAILEY
FLORIDA REGISTRATION NO. 42461

DESIGNER: SEB
DRAWN BY: SDV
DATE: FEBRUARY 2017
CHECKED BY:
DATE: FEBRUARY 2017

ARLINGTON WATER TREATMENT PLANT HIGH SERVICE PUMP REPLACEMENT INSTRUMENTATION LEGEND

PROJ. NO. J6606
DATE: FEBRUARY 2017
SCALE: AS NOTED

NO. SHEETS 26
SHEET NO. 5
DRAWING NO. I-01

J:\Active Projects\CPWJEA\Arlington WTP HSP Replacement\05_100% Submittal\Dwgs\I-01 INSTRUMENTATION LEGEND.dwg 24 X 36, 2/14/2017 5:13:11 PM, dmartin

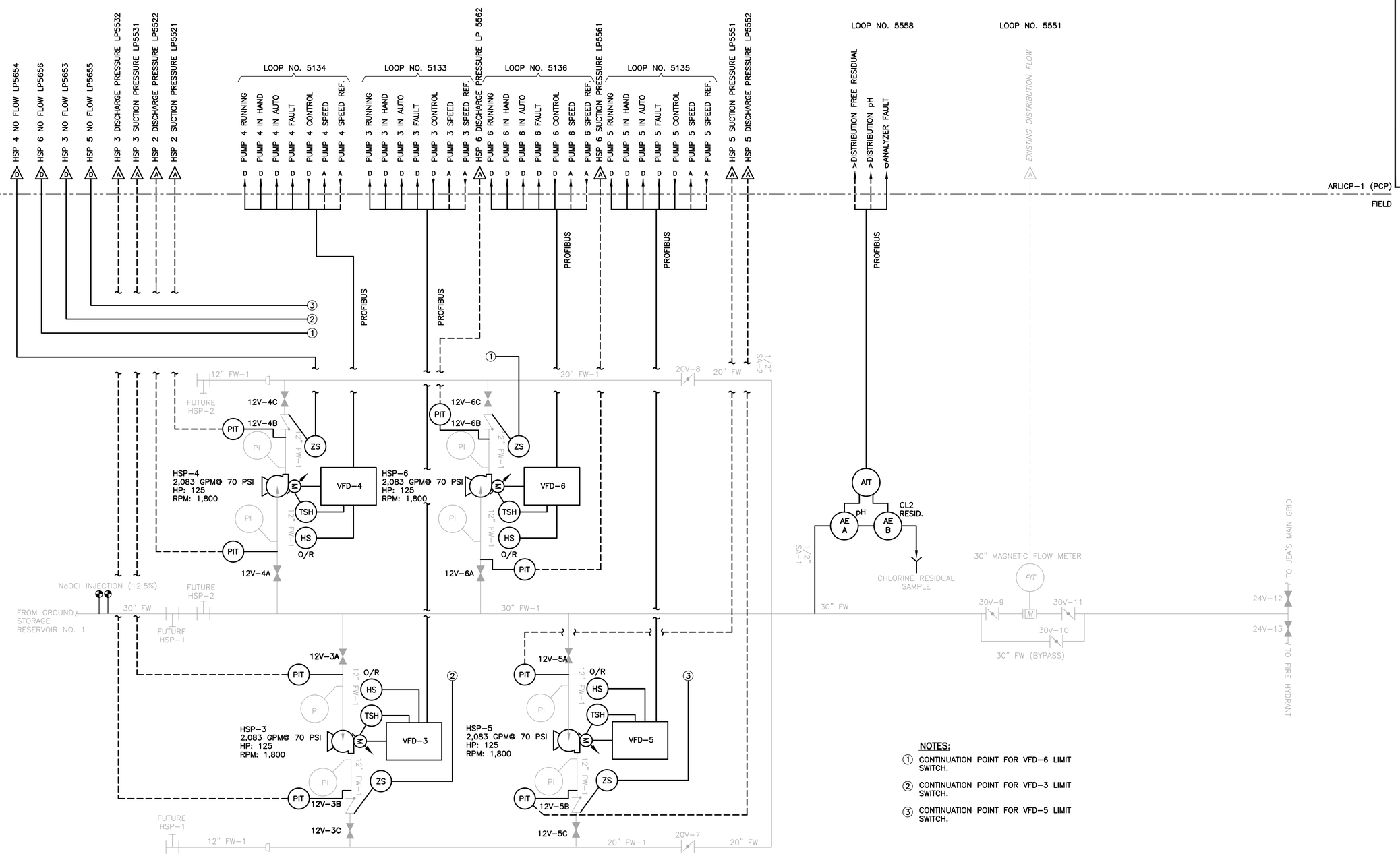

NOTES:

1. CONTINUATION POINT FOR VFD-6 LIMIT SWITCH.
2. CONTINUATION POINT FOR VFD-3 LIMIT SWITCH.
3. CONTINUATION POINT FOR VFD-5 LIMIT SWITCH.

PROCESS & INSTRUMENTATION DIAGRAM

10503 GRIFFIN ROAD, SUITE 202
COOPER CITY, FLORIDA 33328
PHONE: (954) 446-7930
FAX: (954) 446-7931
Stephen E. Bailey, P.E.
Florida P.E. No. 42461

REVISIONS

NO.	BY	DATE
6.	X	X
5.	X	X
4.	X	X
3.	X	X
2.	X	X
1.	X	X

DESIGN ENGINEER: STEPHEN E. BAILEY
FLORIDA REGISTRATION NO. 42461

DESIGNER: SEB
DRAWN BY: SDV
DATE: FEBRUARY 2017
CHECKED BY:
DATE: FEBRUARY 2017

JEA Building Community sm

ARLINGTON WATER TREATMENT PLANT
HIGH SERVICE PUMP REPLACEMENT
PROCESS AND INSTRUMENTATION DIAGRAM

PROJ. NO. J6606
DATE: FEBRUARY 2017
SCALE: AS NOTED

NO. SHEETS 26
SHEET NO. 6
DRAWING NO. I-02

X:\Active Projects\CPH\JEA\Arlington WTP HSP Replacement\05_100% Submittal\Dwgs\I-02 P&ID.dwg, 24 X 36, 2/14/2017 5:13:21 PM, sdvarin

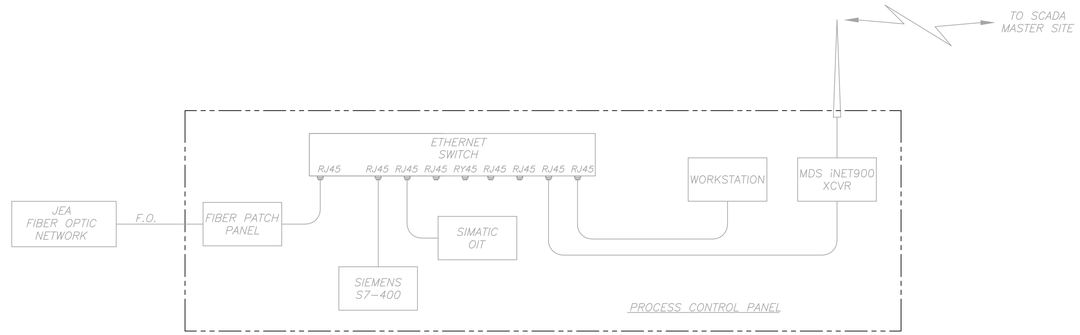

EXISTING SYSTEM BLOCK DIAGRAM

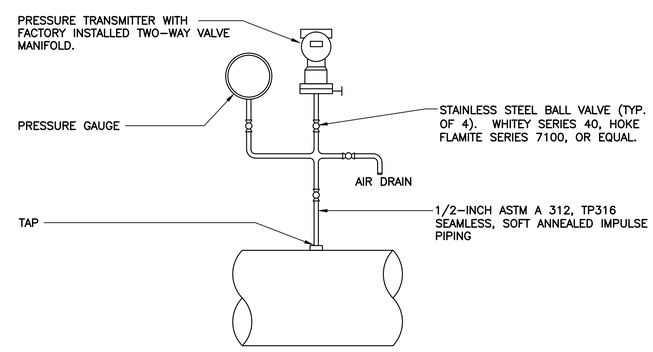

PRESSURE INSTRUMENTATION SYSTEM ASSEMBLY

NOT TO SCALE

10503 GRIFFIN ROAD, SUITE 202
COOPER CITY, FLORIDA 33328
PHONE: (954) 445-7930
FAX: (954) 435-0179
Stephen E. Bailey, P.E.
Florida P.E. No. 42461

NO.	BY	DATE	REVISIONS
6.	X	X	X
5.	X	X	X
4.	X	X	X
3.	X	X	X
2.	X	X	X
1.	X	X	X

DESIGN ENGINEER: STEPHEN E. BAILEY
FLORIDA REGISTRATION NO. 42461

DESIGNER: SEB
DRAWN BY: SDV
DATE: FEBRUARY 2017
CHECKED BY:
DATE: FEBRUARY 2017

JEA Building Community sm

ARLINGTON WATER TREATMENT PLANT
HIGH SERVICE PUMP REPLACEMENT
INSTRUMENTATION DETAILS

PROJ. NO. J6606
DATE: FEBRUARY 2017
SCALE: AS NOTED

NO. SHEETS 26
SHEET NO. 7
DRAWING NO. I-03

X:\Active Projects\CPH\JEA\Arlington WTP HSP Replacement\05_100% Submittal\Dwgs\I-03 P&ID DETAILS.dwg, 24 X 36, 2/14/2017 5:13:31 PM, dmartin

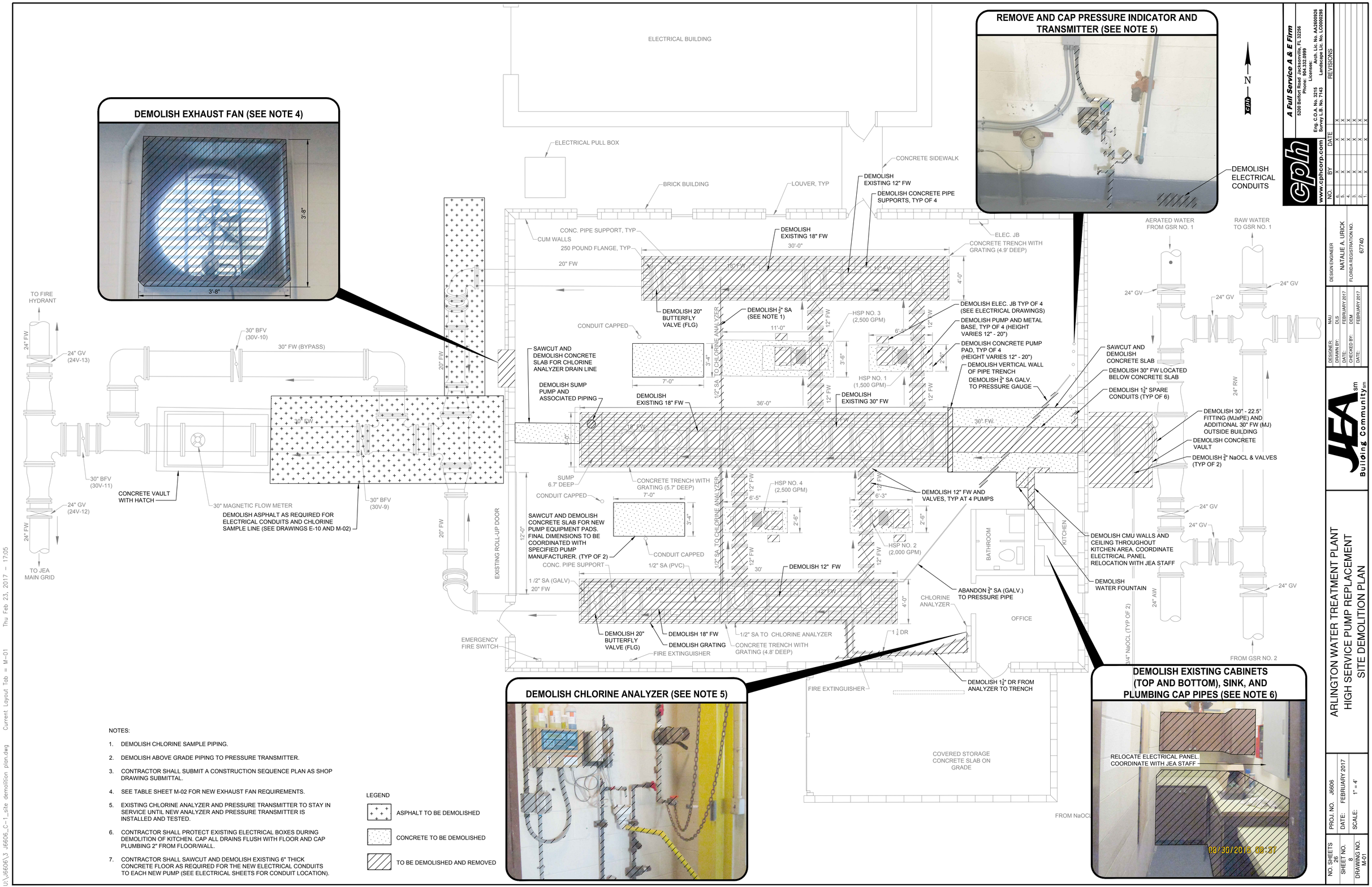

NOTES:

1. DEMOLISH CHLORINE SAMPLE PIPING.
2. DEMOLISH ABOVE GRADE PIPING TO PRESSURE TRANSMITTER.
3. CONTRACTOR SHALL SUBMIT A CONSTRUCTION SEQUENCE PLAN AS SHOP DRAWING SUBMITTAL.
4. SEE TABLE SHEET M-02 FOR NEW EXHAUST FAN REQUIREMENTS.
5. EXISTING CHLORINE ANALYZER AND PRESSURE TRANSMITTER TO STAY IN SERVICE UNTIL NEW ANALYZER AND PRESSURE TRANSMITTER IS INSTALLED AND TESTED.
6. CONTRACTOR SHALL PROTECT EXISTING ELECTRICAL BOXES DURING DEMOLITION OF KITCHEN. CAP ALL DRAINS FLUSH WITH FLOOR AND CAP PLUMBING 2" FROM FLOOR/WALL.
7. CONTRACTOR SHALL SAWCUT AND DEMOLISH EXISTING 6" THICK CONCRETE FLOOR AS REQUIRED FOR THE NEW ELECTRICAL CONDUITS TO EACH NEW PUMP (SEE ELECTRICAL SHEETS FOR CONDUIT LOCATION).

LEGEND

- ASPHALT TO BE DEMOLISHED
- CONCRETE TO BE DEMOLISHED
- TO BE DEMOLISHED AND REMOVED

A Full Service A & E Firm
5200 Belfort Road Jacksonville, FL 32256
Phone: 904.332.3999
Eng. C.O.A. No. 3215 Arch. Lic. No. AA2600026
Survey L.B. No. 7143 Landscape Lic. No. LC0000286
www.cpncorp.com

NO.	BY	DATE	REVISIONS
6.	X	X	X
5.	X	X	X
4.	X	X	X
3.	X	X	X
2.	X	X	X
1.	X	X	X

DESIGN ENGINEER
NATALIE A. LIRICK
FLORIDA REGISTRATION NO. 67740

DESIGNER:	NAU
DRAWN BY:	RJS
DATE:	FEBRUARY 2017
CHECKED BY:	DBM
DATE:	FEBRUARY 2017

JEA Building Community

ARLINGTON WATER TREATMENT PLANT
HIGH SERVICE PUMP REPLACEMENT
SITE DEMOLITION PLAN

PROJ. NO.	J6606
DATE:	FEBRUARY 2017
SCALE:	1" = 4'
NO. SHEETS	26
SHEET NO.	8
DRAWING NO.	M-01

U:\J6606\3_J6606_C-1_site demolition plan.dwg Current Layout Tab = M-01 Thu Feb 23, 2017 - 17:05
Xrefs Attached= J6606-SURBASE [R:\dghalland\J6606\J6606-SURBASE.dwg]

PROPOSED FITTINGS LEGEND:

1. 30° 22 .5° BEND (MJ x PE)
2. 30" SPOOL PIECE (PE x PE)
3. 30" (PE x FLG)
4. 30" x 12" 90° BEND (FLG)
5. 30" SPOOL PIECE (FLG)
6. 12" BLIND FLANGE
7. 30" x 12" TEE (FLG)
8. 12" 90° BEND (FLG)
9. 12" SPOOL PIECE (FLG)
10. 12" GATE VALVE (FLG)
11. 12" x 10" ECCENTRIC REDUCER (FLG) WITH PRESSURE INDICATOR AND TRANSMITTER
12. 6" FLEX COUPLING ADAPTER (FLG)
13. 12" x 6" ECCENTRIC REDUCER (FLG) WITH PRESSURE INDICATOR AND TRANSMITTER
14. 12" GLOBE CHECK VALVE (FLG.)
15. 20" BLIND FLANGE
16. 20" x 12" TEE (FLG)
17. 20" SPOOL PIECE (FLG)
18. 20" BUTTERFLY VALVE (FLG)
19. 30" BLIND FLANGE
20. 4" 90° BEND (MJ)
21. 4" SPOOL PIECE (MJ)

EQUIPMENT

- A — HIGH SERVICE PUMP NO. 3 (2,083 GPM @ 70 PSI, 125HP)
- B — HIGH SERVICE PUMP NO. 4 (2,083 GPM @ 70 PSI, 125HP)
- C — HIGH SERVICE PUMP NO. 5 (2,083 GPM @ 70 PSI, 125HP)
- D — HIGH SERVICE PUMP NO. 6 (2,083 GPM @ 70 PSI, 125HP)

SIDEWALL DIRECT DRIVE FAN

MARK INFORMATION		FAN INFORMATION							MOTOR INFORMATION				
QTY	ITEM	MODEL	VOLUME (CFM)	EXTERNAL SP (IN WG)	TOTAL SP (IN WG)	FAN RPM	OPERATING POWER (HP)	WEIGHT (LB.)	SIZE (HP)	V/C/P	ENCLOSURE	MOTOR RPM	WINDINGS
1	EF-1	SE2-36-614-B30-VGD	15,800	0.125	0.125	1,036	2	234	3	460/60/3	OP	1160	1

EF-1 SELECTED OPTIONS AND ACCESSORIES
No UL Listing
Airflow Direction: Exhaust
Motor Access: From Int. of Bldg.
Coating Epoxy, Light Tan, Fan & Attached Accessories

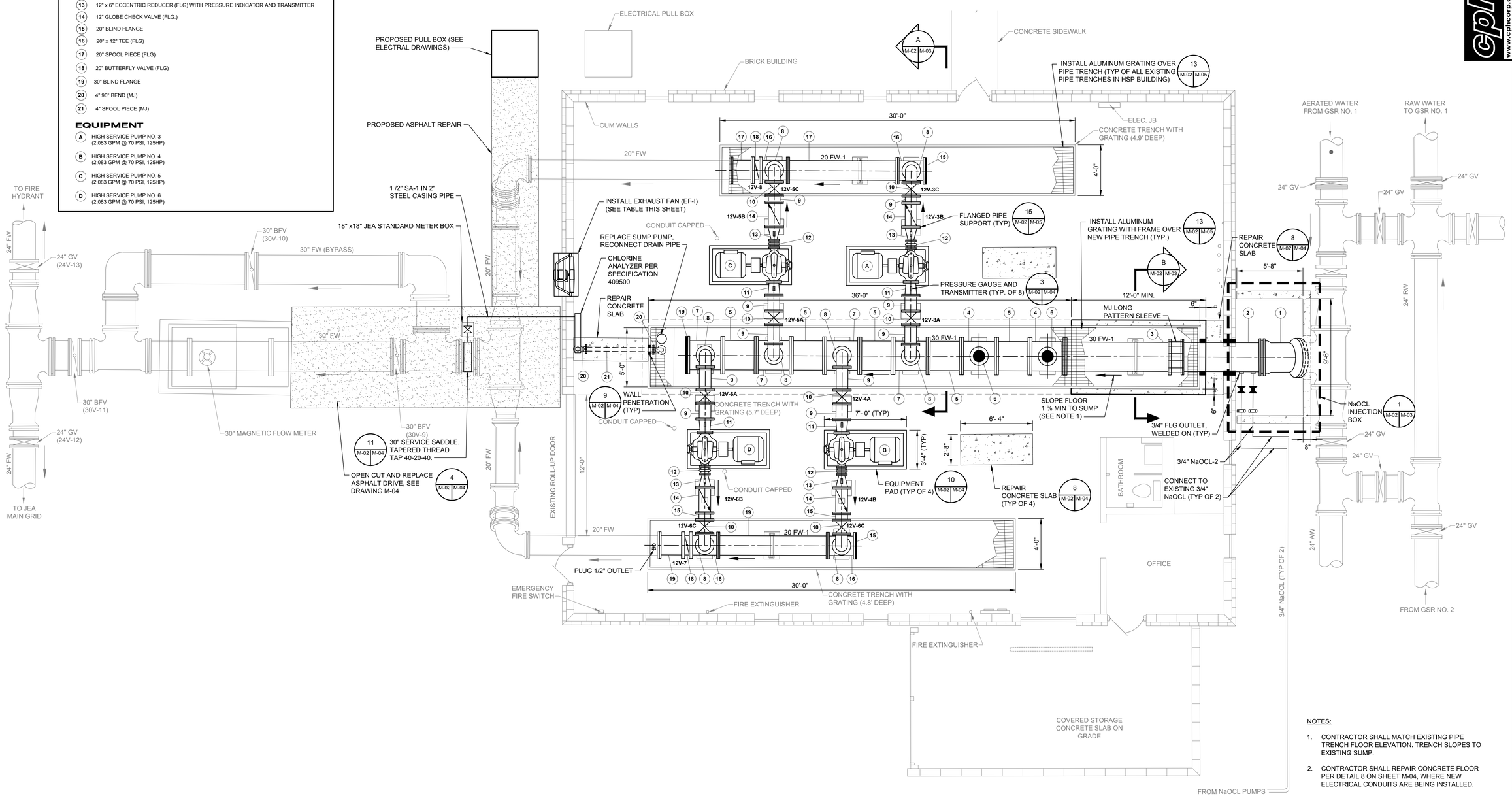

NOTES:

1. CONTRACTOR SHALL MATCH EXISTING PIPE TRENCH FLOOR ELEVATION. TRENCH SLOPES TO EXISTING SUMP.
2. CONTRACTOR SHALL REPAIR CONCRETE FLOOR PER DETAIL 8 ON SHEET M-04, WHERE NEW ELECTRICAL CONDUITS ARE BEING INSTALLED.

A Full Service A & E Firm
5200 Belfort Road Jacksonville, FL 32256
Phone: 904.521.0999
Licenses: Arch. Lic. No. AA26000926
Eng. C.O.A. No. 3215 Landscape Lic. No. LC0000288
Survey L.B. No. 7143
www.cphcorp.com

NO.	BY	DATE	REVISIONS
6.	X	X	X
5.	X	X	X
4.	X	X	X
3.	X	X	X
2.	X	X	X
1.	X	X	X

DESIGN ENGINEER: NATALIE A. LIRICK, FLORIDA REGISTRATION NO. 67740

DESIGNER: NAU
DRAWN BY: RJS
CHECKED BY: DBM
DATE: FEBRUARY 2017
FEBRUARY 2017

JEA Building Community

ARLINGTON WATER TREATMENT PLANT HIGH SERVICE PUMP REPLACEMENT HIGH SERVICE PUMPS PLAN

PROJ. NO. J6606
DATE: FEBRUARY 2017
SCALE: 1" = 4'

NO. SHEETS 26
SHEET NO. 9
DRAWING NO. M-02

U:\J6606\4 J6606_DISTRIBUTION PUMP.dwg Current Layout Tab = M-02 Thu Feb 23, 2017 - 16:26

Xrefs Attached= J6606-BASE [R:\dghalland\J6606\J6606-BASE.dwg] J6606-SURBASE [R:\dghalland\J6606\J6606-SURBASE.dwg]

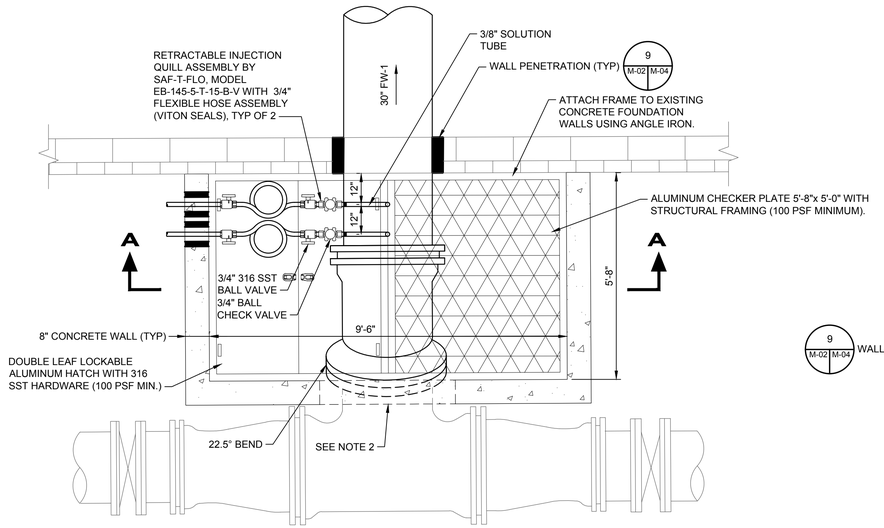

PLAN

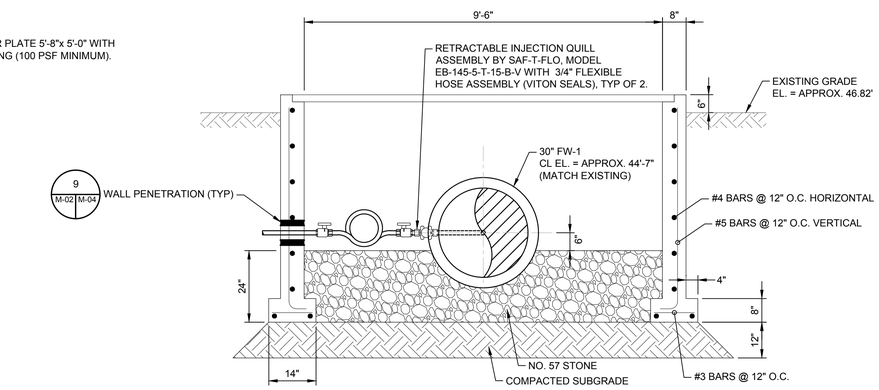

SECTION A-A

NOTES:

1. PROVIDE BITUMASTIC COATING BETWEEN ALUMINUM AND STEEL AND/OR CONCRETE SURFACES.
2. FORM CONCRETE WALLS AROUND 30" - 22.5° BEND.

NaOCL INJECTION BOX DETAIL

1 M-02 M-03

SCALE: 1" = 2'

PROPOSED FITTINGS LEGEND:

1. 30" 22 .5° BEND (MJ x PE)
2. 30" SPOOL PIECE (PE x PE)
3. 30" (PE x FLG)
4. 30" x 12" 90° BEND (FLG)
5. 30" SPOOL PIECE (FLG)
6. 12" BLIND FLANGE
7. 30" x 12" TEE (FLG)
8. 12" 90° BEND (FLG)
9. 12" SPOOL PIECE (FLG)
10. 12" GATE VALVE (FLG)
11. 12" x 10" ECCENTRIC REDUCER (FLG) WITH PRESSURE INDICATOR AND TRANSMITTER
12. 6" FLEX COUPLING ADAPTER (FLG)
13. 12" x 6" ECCENTRIC REDUCER (FLG) WITH PRESSURE INDICATOR AND TRANSMITTER
14. 12" GLOBE CHECK VALVE (FLG.)
15. 20" BLIND FLANGE
16. 20" x 12" TEE (FLG)
17. 20" SPOOL PIECE (FLG)
18. 20" BUTTERFLY VALVE (FLG)
19. 30" BLIND FLANGE
20. 4" 90° BEND (MJ)
21. 4" SPOOL PIECE (MJ)

EQUIPMENT

- A HIGH SERVICE PUMP NO. 3 (2,083 GPM @ 70 PSI, 125HP)
- B HIGH SERVICE PUMP NO. 4 (2,083 GPM @ 70 PSI, 125HP)
- C HIGH SERVICE PUMP NO. 5 (2,083 GPM @ 70 PSI, 125HP)
- D HIGH SERVICE PUMP NO. 6 (2,083 GPM @ 70 PSI, 125HP)

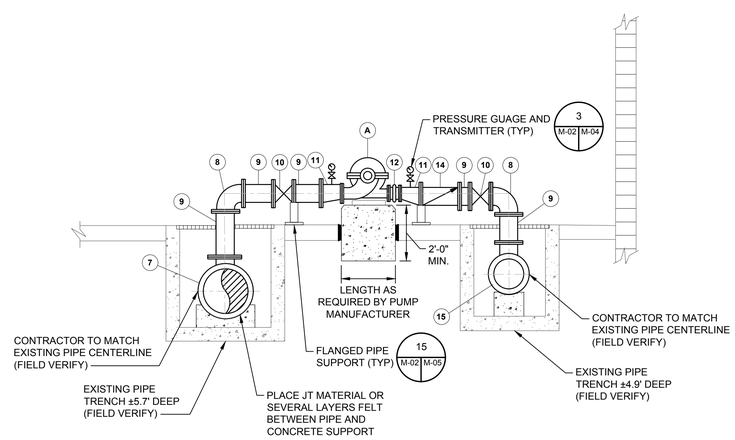

HIGH SERVICE PUMP SECTION (TYP OF 4)

A M-02 M-03

SCALE: 1" = 4'

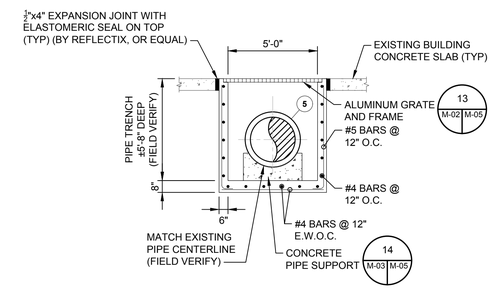

NEW PIPE TRENCH

B M-02 M-03

SCALE: 1" = 4'

A Full Service A & E Firm
5200 Belfort Road Jacksonville, FL 32256
Phone: 904.21.2999
Licenses: Arch. Lic. No. AA26000526
Eng. C.O.A. No. 3215 Landscape Lic. No. LC26000238
Survey L.B. No. 7143
www.cphcorp.com

NO.	BY	DATE	REVISIONS
6.	X	X	X
5.	X	X	X
4.	X	X	X
3.	X	X	X
2.	X	X	X
1.	X	X	X

DESIGN ENGINEER
NATALIE A. LIRICK
FLORIDA REGISTRATION NO. 67740

DESIGNER:	NAJ
DRAWN BY:	RJS
DATE:	FEBRUARY 2017
CHECKED BY:	DBM
DATE:	FEBRUARY 2017

JEA Building Community

ARLINGTON WATER TREATMENT PLANT
HIGH SERVICE PUMP REPLACEMENT
HIGH SERVICE PUMP SECTIONS

PROJ. NO.	J6606
DATE:	FEBRUARY 2017
SCALE:	AS SHOWN
NO. SHEETS	26
SHEET NO.	10
DRAWING NO.	M-03

U:\J6606\4 J6606_DISTRIBUTION PUMP.dwg Current Layout Tab = M-03 Thu Feb 23, 2017 - 16:26

Xrefs Attached= J6606-BASE [R:\dghalland\J6606\J6606-BASE.dwg] J6606-SURBASE [R:\dghalland\J6606\J6606-SURBASE.dwg]

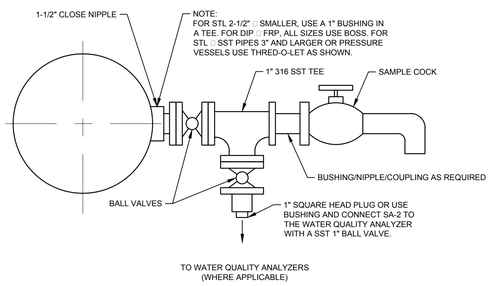

SPRING LINE PIPE INSTALLATION

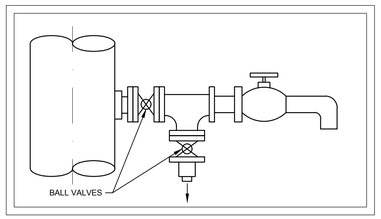

VERTICAL PIPE INSTALLATION

SAMPLING POINT

SCALE: NONE

2 | -- | --

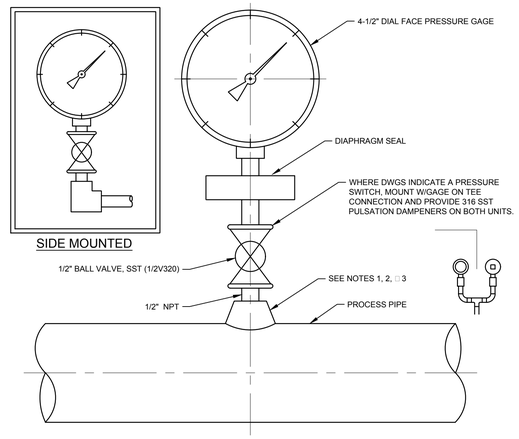

SIDE MOUNTED

TOP MOUNTED

NOTES:

1. FOR STL, GALV □ PVC 2-1/2" □ SMALLER USE A BUSHING IN A TEE.
2. FOR DI □ FRP ALL SIZES, USE PIPE SADDLE W/BUSHING.
3. FOR STL □ SST PIPES 3" □ LARGER, □ PRESSURE VESSELS, USE THRED-O-LET AS SHOWN.
4. SST = TYPE 316 SST.

PRESSURE GAUGE MOUNTING

SCALE: NONE

3 | M-02 | M-04

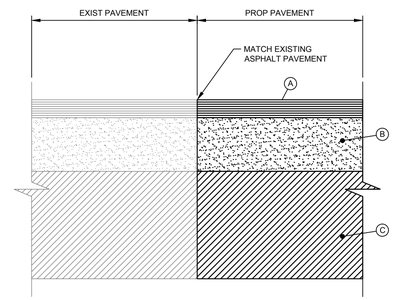

ELEVATION

LEGEND

(A) - 2" S-3 OR SP EQUIVALENT ASPHALT

(B) - 6" LIMEROCK BASE

(C) - 12" STABILIZED SUB-GRADE

NOTES:

1. SEE SHEET M-01 FOR LOCATION OF ASPHALT PAVEMENT TO BE REPAIRED.
2. IF REQUIRED, SLOPE PROPOSED ASPHALT PAVEMENT TO MATCH EXISTING PAVEMENT.

ASPHALT DRIVE DETAIL

SCALE: NONE

4 | G-03 | M-04

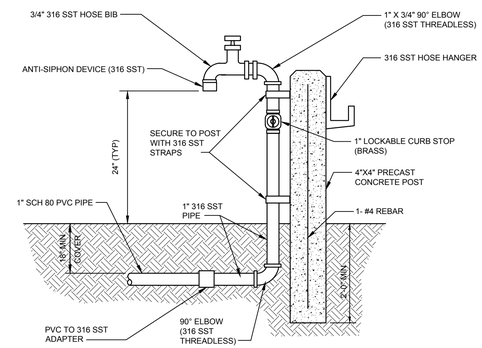

NOTES:

1. PROVIDE 75' 0F 3/4" DIA HOSE WITH PISTOL GRIP SHUTOFF NOZZLE PER HOSE RACK.

HOSE BIBB AND HANGER DETAIL

SCALE: NONE

5 | G-03 | M-04

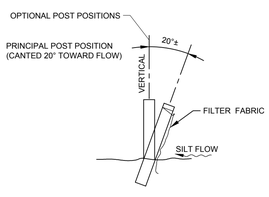

SECTION

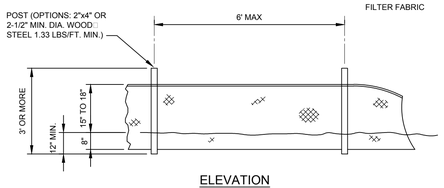

ELEVATION

TYPE III SILT FENCE

SCALE: NONE

6 | -- | --

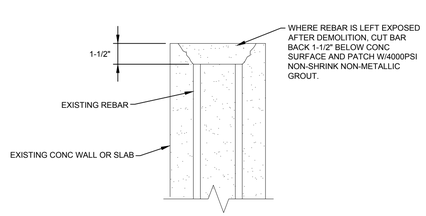

CONCRETE DEMO/REPAIR DETAIL

SCALE: NONE

7 | M-02 | M-04

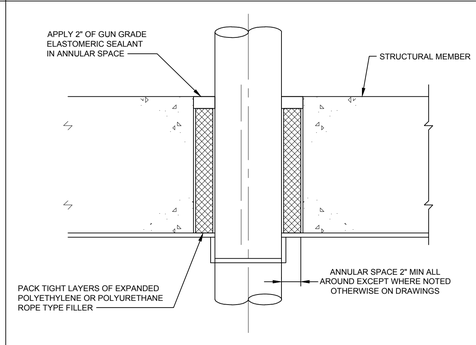

SLAB/WALL PENETRATION DETAIL

SCALE: NONE

9 | M-02 | M-04

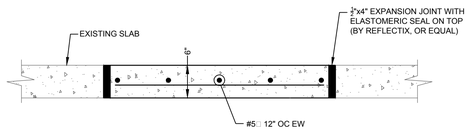

TYPICAL CONCRETE SLAB REPAIR SECTION

SCALE: NONE

8 | M-02 | M-04

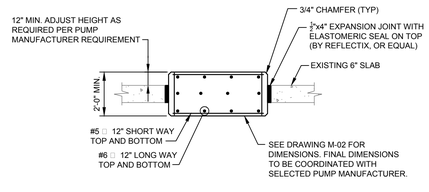

EQUIPMENT PAD

SCALE: NONE

10 | M-02 | M-04

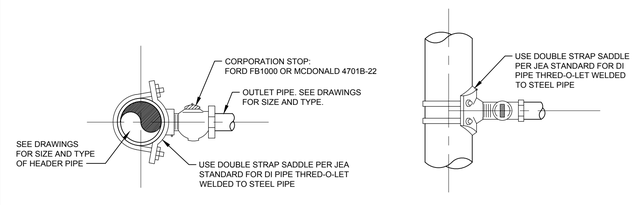

SIDE VIEW

TOP VIEW

SERVICE SADDLE CONNECTION - DETAIL

SCALE: NONE

11 | M-02 | M-04 | G-03

A Full Service A & E Firm
5200 Belfort Road Jacksonville, FL 32256
Phone: 904.332.9999
Eng. C.O.A. No. 3215 Arch. Lic. No. AA26000526
Survey L.B. No. 7143 Landscape Lic. No. LC0000288
www.cphcorp.com

NO.	BY	DATE
6.	X	X
5.	X	X
4.	X	X
3.	X	X
2.	X	X
1.	X	X

REVISIONS

DESIGN ENGINEER
NATALIE A. LIRICK
FLORIDA REGISTRATION NO.
67740

DESIGNER:	NAU
DRAWN BY:	RJS
DATE:	FEBRUARY 2017
CHECKED BY:	DEM
DATE:	FEBRUARY 2017

JEA Building Community

ARLINGTON WATER TREATMENT PLANT
HIGH SERVICE PUMP REPLACEMENT
MECHANICAL DETAILS

PROJ. NO.	J6606
DATE:	FEBRUARY 2017
SCALE:	NONE
NO. SHEETS	11
SHEET NO.	8
DRAWING NO.	M-04

U:\J6606\8 J6606 Civil Details.dwg Current Layout Tab = M-04 Thu Feb 23, 2017 - 16:55

Xrefs Attached=

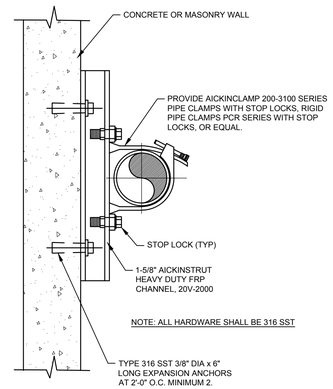

NON-METALLIC PIPE SUPPORT DETAIL

12 (— / —)

SCALE: NONE

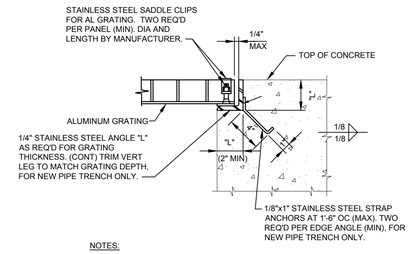

NOTES:

1. ALL DIMENSIONS ARE TO BE COORDINATED WITH GRATING MFR.
2. EXISTING FRAMES AND ANGLES IN THE EXISTING PIPE TRENCHES SHALL REMAIN IN PLACE.

ALUMINUM GRATING EDGE DETAIL

13 (M-02 | M-05)

SCALE: NONE

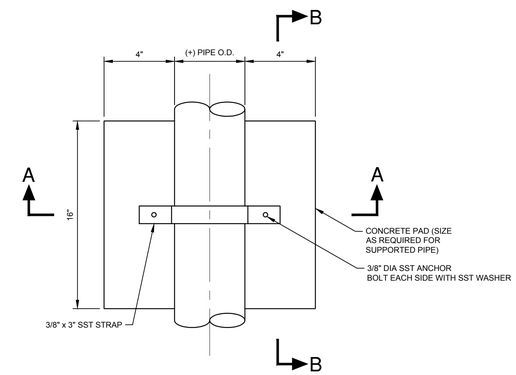

PLAN

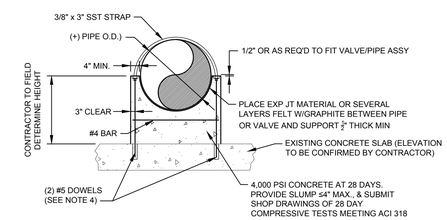

SECTION A-A

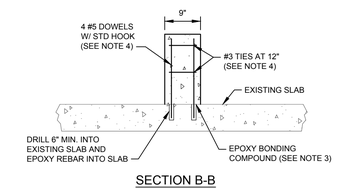

SECTION B-B

NOTES:

1. CONTRACTOR SHALL PROVIDE TEMPORARY SUPPORT FOR PIPE WHILE FORMING NEW PIPE SUPPORTS.
2. CONTRACTOR SHALL DETERMINE FINAL PIPE DIMENSIONS OF CONCRETE PIPE SUPPORT BASED ON EXISTING CONCRETE SLAB ELEVATIONS.
3. BONDING COMPOUND TO BE SIKADUR 32 HI-MOD, SIKA CHEMICAL CORP., CONCRESIVE BY BASF OR ENCO EPOXY 452 BY EUCLID CHEMICAL CO.
4. REINFORCEMENT SHALL CONFORM TO ASTM A615 OR A706, GRADE 60. TIE WIRE TO BE 16 GAUGE MIN.

CRADLE PIPE SUPPORT DETAIL

16 (— / —)

SCALE: NONE

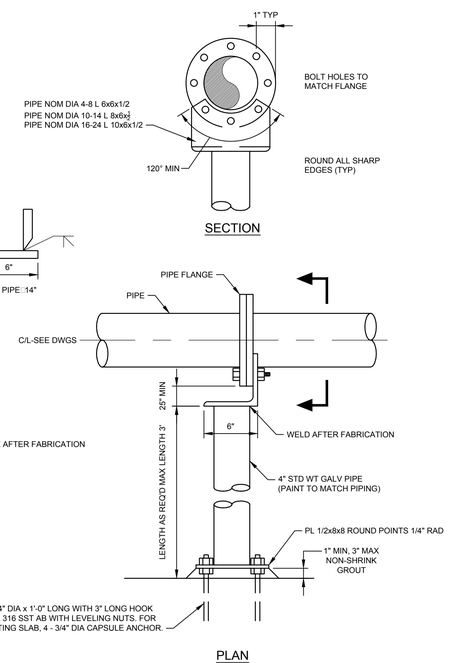

FLANGE PIPE SUPPORT DETAIL

15 (M-02 | M-05)

SCALE: NONE

SCHEDULE

4" - 6" Ø PIPE = 12" SQUARE PIER
8" - 10" Ø PIPE = 16" SQUARE PIER
12" - 30" Ø PIPE = 18" SQUARE PIER

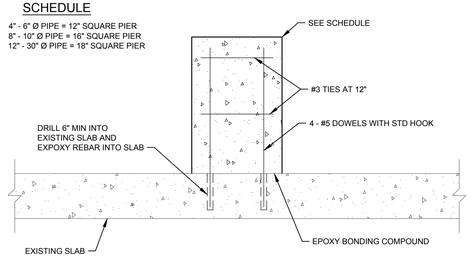

FOR EXISTING SLAB

NOTE:

PROVIDE PEDESTAL PIPE SUPPORT WHERE CRADLE PIPE SUPPORTS CANNOT BE USED.

CONCRETE PEDESTAL PIPE SUPPORT DETAIL

14 (M-03 | M-05)

SCALE: NONE

A Full Service A & E Firm
5200 Belfort Road Jacksonville, FL 32256
Phone: 904.332.9999
Eng. C.O.A. No. 3215 Arch. Lic. No. AA26000526
Survey L.B. No. 7143 Landscape Lic. No. LC0000288
www.cphcorp.com

NO.	BY	DATE	REVISIONS
6.	X	X	X
5.	X	X	X
4.	X	X	X
3.	X	X	X
2.	X	X	X
1.	X	X	X

DESIGN ENGINEER
NATALIE A. LIRICK
FLORIDA REGISTRATION NO. 67740

DESIGNER:	NAU
DRAWN BY:	RJS
DATE:	FEBRUARY 2017
CHECKED BY:	DBM
DATE:	FEBRUARY 2017

JEA Building Community

ARLINGTON WATER TREATMENT PLANT HIGH SERVICE PUMP REPLACEMENT MECHANICAL DETAILS

PROJ. NO.	J6606
DATE:	FEBRUARY 2017
SCALE:	NONE

NO. SHEETS 16
SHEET NO. 12
DRAWING NO. M-05

U:\J6606\8_J6606 Civil Details.dwg Current Layout Tab = M-05 Thu Feb 23, 2017 - 16:57
Xrefs Attached=

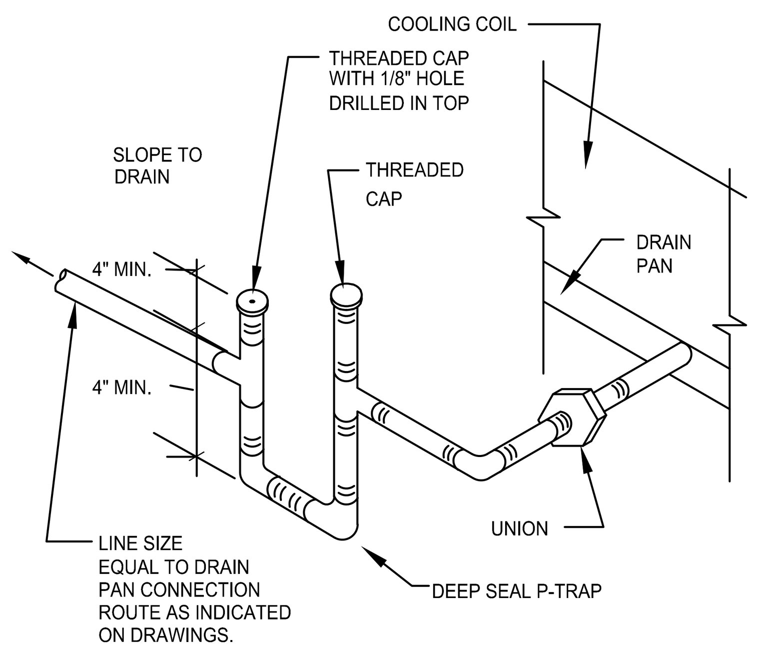

3 M-06 CONDENSATE P-TRAP DETAIL
SCALE: NONE

MECHANICAL ABBREVIATION

AC	AIR CONDITIONING	ESP	EXTERNAL STATIC PRESSURE	MISC	MISCELLANEOUS
AFF	ABOVE FINISHED FLOOR	F	FAHRENHEIT	MPH	MILES PER HOUR
AFG	ABOVE GRADE	FA	FILTER ACCESS	NFPA	NATIONAL FIRE PROTECTION ASSOCIATION
AHU	AIR HANDLING UNIT	FACP	FIRE ALARM CONTROL PANEL	NOM	NOMINAL
BOD	BOTTOM OF DUCT	FCD	FLOW CONTROL DAMPER	NTS	NOT TO SCALE
BTU	BRITISH THERMAL UNIT	FD	FIRE DAMPER	OA	OUTSIDE AIR
CAP	CAPACITY	FLA	FULL LOAD AMPACITY	OAL	OUTSIDE AIR LOUVER
CD	CONDENSATE DRAIN	FS	FIRE STAT	OC	ON CENTER
CFM	CUBIC FEET PER MINUTE	GFI	GROUND FAULT INTERRUPTER	PD	PRESSURE DROP
CMU	CONCRETE MASONRY UNIT	GPM	GALLONS PER MINUTE	PH	PHASE
CONN	CONNECTION	HP	HORSEPOWER	PVC	POLYVINYLCHLORIDE
CU	CONDENSING UNIT	HZ	HERTZ	PSI	POUNDS PER SQUARE INCH
DB	DRY BULB	IPLV	INTEGRATED PORT LOAD VALVE	RA	RETURN AIR
DG	DOOR GRILLE	KW	KILOWATT	REF	REFRIGERANT
DI	DIGITAL INPUT	LAT	LEAVING AIR TEMPERATURE	RG	RETURN GRILLE
DN	DOWN	LAT	LATENT	RLA	RUNNING LOAD AMPS
DO	DIGITAL OUTPUT	LBS	POUNDS	RTU	ROOFTOP A/C UNIT
EAT	ENTERING AIR TEMPERATURE	LD	LOUVERED DOOR	SA	SUPPLY AIR
EER	ENERGY EFFICIENCY RATIO	LRA	LOCKED ROTOR AMPS	SD	SUPPLY DIFFUSER
EF	EXHAUST FAN	LVG	LEAVING	SEER	SEASONAL ENERGY EFFICIENCY RATING
EG	EXHAUST GRILLE	MAX	MAXIMUM	SG	SUPPLY GRILLE
ELEC	ELECTRICAL	MBH	1000xBTU	SEN	SENSIBLE
EX	EXHAUST	MCA	MINIMUM CIRCUIT AMPACITY	V	VOLT
ENT	ENTERING	MFR	MANUFACTURER	WB	WETBULB
				WC	WATER COLUMN

ALL ABBREVIATIONS INDICATED ON THIS LIST MAY NOT NECESSARILY APPLY TO THIS PROJECT.

MECHANICAL NOTES

1. AIR CONDITIONING UNITS ARE BASED ON ARI STANDARD CONDITIONS OF 80°F DB, 67° WB, INDOOR ENTERING AIR TEMPERATURE AND 95° DB ENTERING AIR OUTDOOR DESIGN.
2. PROVIDE WITH MOTORIZED AIR DAMPERS, MERV 8 FILTERS AND PROTECTION AGAINST COMPRESSOR SHORT CYCLING.
3. PROVIDE SYSTEMS HONEYWELL T6 FOCUS PRO THERMOSTAT.
4. PROVIDE CONDENSATE DRAIN "P" TRAP MINIMUM 2-1/2" DEEP, OR TWICE THE TOTAL STATIC PRESSURE, WHICHEVER IS GREATER. PROVIDE CODE COMPLIANT OVERFLOW SHUT-OFF SENSOR AND SWITCH.
5. PROVIDE COORDINATION ON EXACT DIMENSIONS OF MANUFACTURER'S RECOMMENDED CLEARANCES AROUND UNIT.
6. ALL COILS SHALL HAVE COPPER TUBES AND ALUMINUM FINS.
7. COMPRESSOR SHALL HAVE A MINIMUM 5-YEAR WARRANTY ALL OTHER EQUIPMENT SHALL HAVE MINIMUM 1 YEAR WARRANTY.
8. PROVIDE SINGLE POINT POWER CONNECTION, AND DUPLEX-GFI ELECTRICAL CONVENIENCE OUTLET WITHIN 25 FT.
9. PROVIDE ONE SET OF ADDITIONAL AIR FILTERS.
10. MUST MEET THE LATEST MINIMUM EER'S & SEER'S AS INDICATED BY EFFICIENCY CODE REQUIREMENTS.
11. PROVIDE DUCT MOUNTED SMOKE DETECTORS WITH REMOTE INDICATING RESET AND AUDIO VISUAL ALARM INDICATOR.
12. CONDENSER COILS, EVAPORATOR COILS, AND REFRIGERANT PIPING SHALL HAVE HUSKY-COAT DIP COATED BY BRONZ-GLOW.

NOTE:
ATTACHMENTS ARE IN ACCORDANCE WITH FLORIDA BUILDING CODE 2014 FIGURE 1609B. ATTACHEMENTS LISTED BELOW SHALL WITHSTAND 150 MPH WINDS.

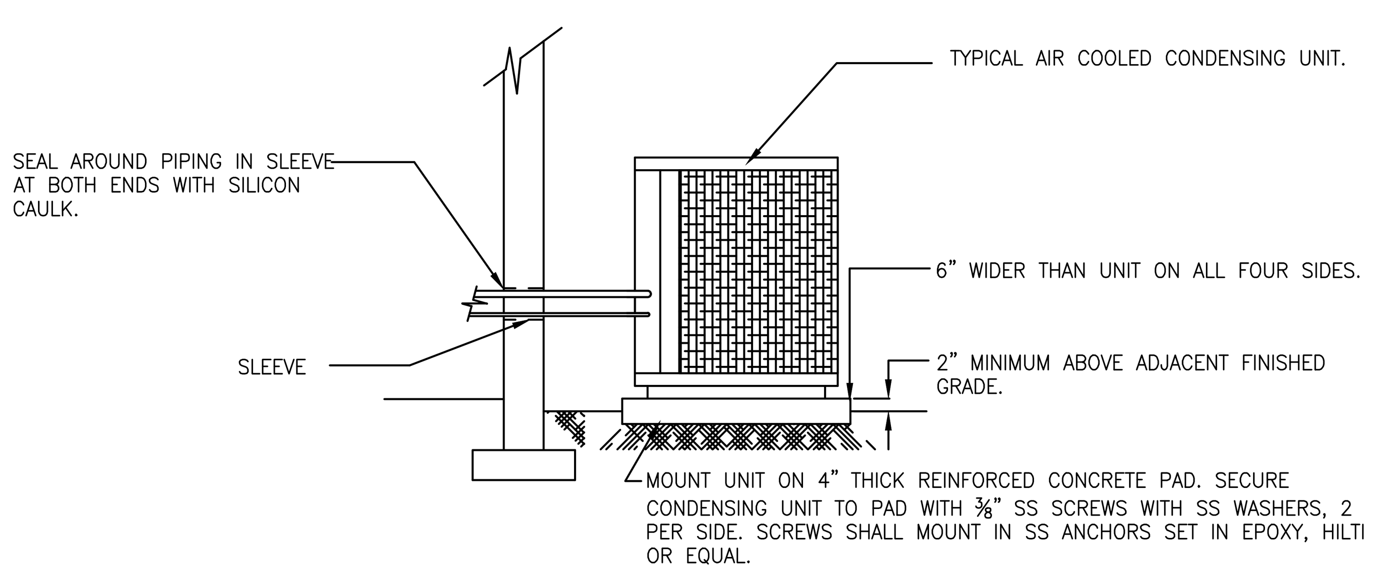

2 M-06 CONDENSER MOUNTING DETAIL
SCALE: NONE

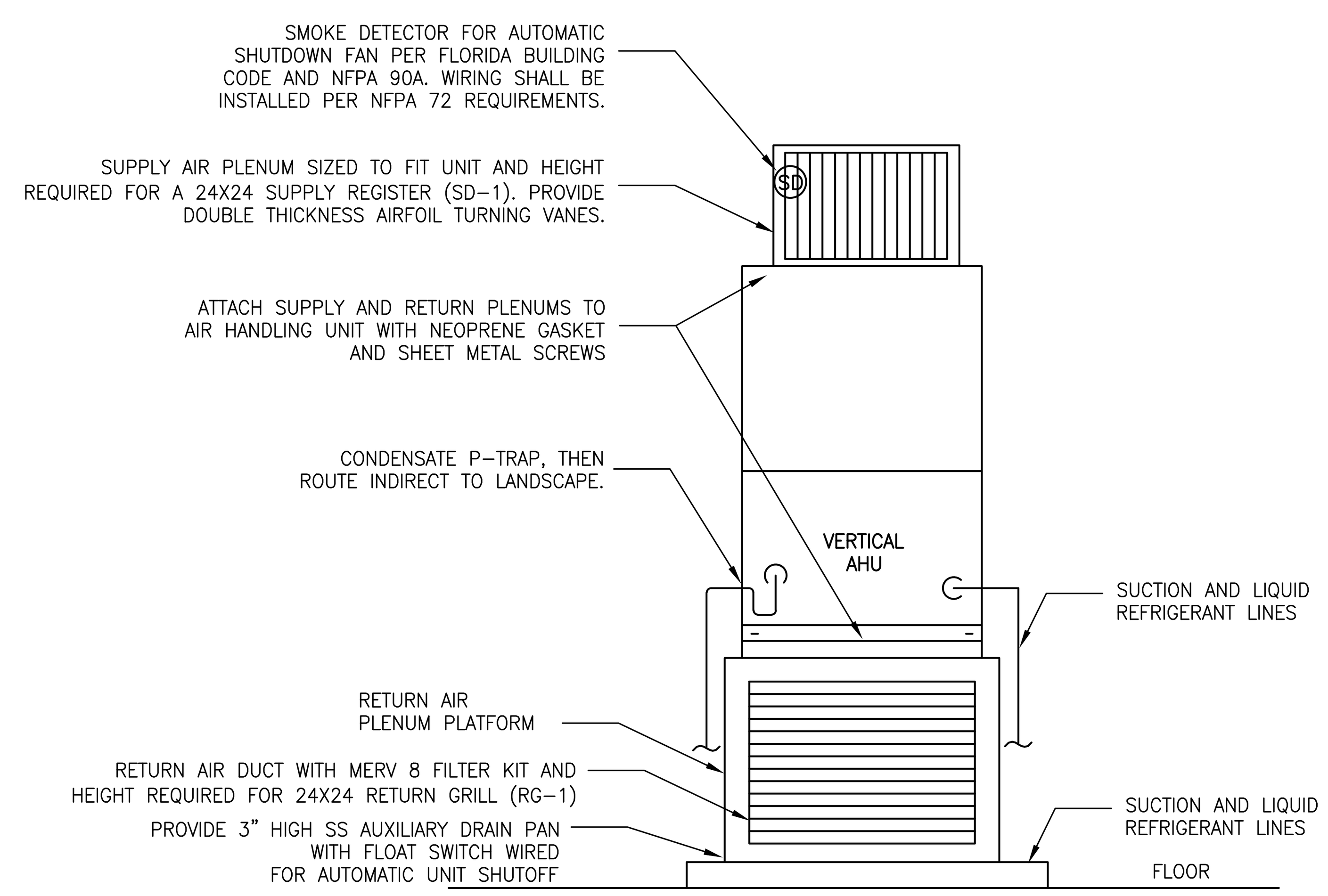

1 M-06 VERTICAL AHU DETAIL
SCALE: NONE

MECHANICAL GENERAL NOTES

1. THE INTENT OF THESE NOTES AND MECHANICAL NOTES ON DRAWINGS IS TO CLARIFY THE SCOPE OF WORK AND ALERT CONTRACTOR OF EXISTING CONDITIONS. CONTRACTOR TO VISIT SITE AND VERIFY ALL CLEARANCES BEFORE FABRICATION OF DUCTWORK AND PROVIDE ADDITIONAL OFFSET AND/OR CHANGES IN DUCT SIZES TO MEET FIELD CONDITIONS AND COORDINATE WITH ELECTRICAL, PLUMBING AND FIRE PROTECTION SUBCONTRACTOR BEFORE ANY CONSTRUCTION WORK.
2. ALL SUPPLY AND RETURN DUCTWORK MAY BE R6 INSULATED ANTIMICROBIAL DUCTBOARD OR EXTERNALLY INSULATED SHEET METAL CONSTRUCTION IN ACCORDANCE WITH LATEST SMACNA STANDARDS. INSULATION SHALL HAVE AN INSTALLED MINIMUM THERMAL RESISTANCE (R) VALUE OF 6.0. ALL EXHAUST DUCTWORK SHALL BE UNINSULATED SHEET METAL CONSTRUCTION IN ACCORDANCE WITH LATEST SMACNA STANDARDS. ALL JOINTS SHALL BE SECURELY TAPED WITH 3" WIDE GLASS FABRIC TAPE WITH FOSTER 30/35 MASTIC OR EQUAL. FLEXIBLE DUCTS: EITHER SPIRAL ROUND SPRING STEEL WITH FLAMEPROOF VINYL SHEATHING, OR CORRUGATED ALUMINUM. COMPLY WITH UL 181. PROVIDE 1" THICK CONTINUOUS FLEXIBLE FIBERGLASS SHEATH WITH VINYL VAPOR BARRIER JACKET.
3. DUCT SHALL BE SECURELY SUPPORTED, HUNG OR SUSPENDED IN ACCORDANCE WITH FL BUILDING CODE.
4. OUTSIDE AIR INTAKE SHALL MAINTAIN A MINIMUM OF 10'-0" FROM ANY EXHAUST OR SANITARY VENT THROUGH ROOF PIPING.
5. PROVIDE ALL AIR-CONDITIONING UNITS WITH MANUFACTURERS RECOMMENDED SERVICE AREA CLEARANCES AND ELECTRICAL CONVENIENCE OUTLETS.
6. ALL TRANSFER DUCTWORK LEADING TO REST ROOMS (IF USED) SHALL HAVE A ZERO LEAKAGE BACK DRAFT DAMPER AS SHOWN ON THE MECHANICAL DRAWINGS.
7. ALL AIR HANDLING UNITS TO HAVE SMOKE DETECTORS IF REQUIRED BY CODE. DETECTORS SHALL SHUT DOWN UNIT UPON ACTIVATION. SEE NOTE #13 FOR FURTHER DETAILS.
8. IN GENERAL, PLANS AND DIAGRAMS ARE SCHEMATIC ONLY AND SHOULD NOT BE SCALED. HVAC CONTRACTOR IS RESPONSIBLE FOR ANY ADDED ELECTRICAL COSTS WHICH MAY RESULT FROM SUBSTITUTED EQUIPMENT.
9. DUCTWORK INSULATION SHALL BE 1-1/2" FOIL FACED FIBERGLASS DUCT WRAP.
10. COORDINATE AIR DISTRIBUTION DEVICE LOCATIONS WITH LIGHTING FIXTURES, SPRINKLER HEADS, AND SPEAKERS.
11. TURNING VANES SHALL BE PROVIDED IN ALL SUPPLY DUCT RECTANGULAR ELBOWS WITH ANGLES BETWEEN 15 DEGREES AND LESS THAN 90 DEGREES PER FIG. 2-5 OF THE SMACNA MANUAL.
12. DUCT DIMENSIONS SHOWN ON DRAWINGS ARE CLEAR INSIDE DIMENSIONS. DUCTWORK, DIFFUSERS, REGISTERS, GRILLES, AND OTHER ITEMS OF THE AIR HANDLING SYSTEM SHALL NOT BE SUPPORTED BY THE CEILING OR CEILING SUSPENSION SYSTEM.
13. SMOKE DETECTOR(S) SHALL BE INSTALLED IN AIR SYSTEMS WITH A DESIGN CAPACITY GREATER THAN 2000 CFM IN THE SUPPLY (AND RETURN AIR, IF REQUIRED BY CODE) DUCTWORK PRIOR TO MIXING WITH OUTSIDE AIR. FURTHERMORE, WHERE MULTIPLE AIR SYSTEMS SHARE COMMON SUPPLY OR RETURN AIR DUCTS OR PLENUMS WITH A COMBINED DESIGN CAPACITY GREATER THAN 2000 CFM, THE RETURN AIR AND SUPPLY AIR SYSTEM SHALL BE PROVIDED WITH SMOKE DETECTORS. IF THE BUILDING IS PROVIDED WITH A FULL FIRE ALARM SYSTEM, THE SMOKE DETECTOR(S) SHALL BE WIRED TO STOP THE FAN UPON DETECTION OF SMOKE, AND SIGNAL THE BUILDING FIRE ALARM CONTROL PANEL PER NFPA 72. IF THE BUILDING IS NOT PROVIDED WITH FULL FIRE ALARM SYSTEM, THE SMOKE DETECTOR(S) SHALL STOP THE FAN AND CAUSE A VISIBLE AND AUDIBLE ALARM SIGNAL IN A NORMALLY OCCUPIED AREA PER NFPA 90A. THE SMOKE DETECTOR(S) SHALL BE FURNISHED AND INSTALLED BY THE MECHANICAL CONTRACTOR, WIRED BY THE ELECTRICAL OR FIRE ALARM CONTRACTOR, AND SHALL BE CONNECTED TO FIRE ALARM SYSTEM IN ACCORDANCE WITH REQUIREMENTS OF NFPA 72 NATIONAL FIRE ALARM CODE.
14. ALL SUPPLY AIR DIFFUSERS SHALL BE 4-WAY DIRECTIONAL THROW UNLESS OTHERWISE NOTED.
15. UNLESS OTHERWISE NOTED, INSTALL DUCTWORK AS HIGH AS POSSIBLE, TIGHT TO BOTTOM OF STRUCTURE. COORDINATE DUCT ELEVATION WITH RAIN LEADERS, WATER PIPING, SANITARY DRAINS AND MAJOR ELECTRICAL CONDUITS.
16. CONTRACTOR SHALL PROVIDE ALL SUPPLEMENTARY STEEL REQUIRED TO SUSPEND MECHANICAL EQUIPMENT AND MATERIALS. INSTALLATION OF THE EQUIPMENT SHALL COMPLY WITH THE MANUFACTURER'S SPECIFICATIONS AND CLEARANCE REQUIREMENTS FOR SERVICING OF EQUIPMENT.
17. VERIFY SERVICE VOLTAGE WITH ELECTRICAL CONTRACTOR PRIOR TO ORDERING EQUIPMENT.
18. PROVIDE A TRAP IN ALL CONDENSATE PIPING LOCATED AT THE AHU UNIT. SLOPE CONDENSATE LINES 1/8" PER FOOT. CONDENSATE LINES SHALL BE PVC SCH. 40. ALL CONDENSATE DRAIN PIPING SHALL BE PROPERLY SUPPORTED.
19. ALL MECHANICAL WORK SHALL MEET ALL THE REQUIREMENTS OF THE "FLORIDA BUILDING CODE 5th EDITION".
20. GUARANTEE; FOR ONE YEAR AFTER DATE OF ACCEPTANCE BY THE OWNER, ALL EQUIPMENT, MATERIALS AND WORKMANSHIP TO BE FREE FROM ANY DEFECTS.
21. DO NOT CUT STRUCTURAL MEMBERS WITHOUT PRIOR WRITTEN APPROVAL OF THE STRUCTURAL ENGINEER OR ARCHITECT. ARRANGE FOR REPAIRS REQUIRED TO RESTORE OTHER WORK, BECAUSE OF DAMAGE CAUSED AS A RESULT OF MECHANICAL INSTALLATIONS.
22. FLEXIBLE AND RIGID ROUND DUCT TAKE-OFFS FOR DIFFUSERS SHALL BE THE SAME SIZE AS DIFFUSER NECK. MAXIMUM FLEXIBLE DUCT LENGTH SHALL BE 12'-0". FLEXIBLE DUCT SHALL BE THERMAFLEX TYPE M-KA OR EQUAL, AND BE UL LISTED AND COMPLY WITH NFPA STANDARD NO. 90A.
23. ALL WALL MOUNTED THERMOSTATS SHALL BE INSTALLED AT AN ELEVATION OF 54" ABOVE FINISHED FLOOR TO THE TOP UNLESS OTHERWISE NOTED ON DRAWINGS. LOCATION OF THE WALL MOUNTED THERMOSTAT SHALL BE COORDINATED WITH OTHER TRADES FOR A NEAT APPEARANCE. FINAL LOCATION OF THERMOSTAT SHALL BE SUBJECT TO THE APPROVAL OF THE ENGINEER OR HIS REPRESENTATIVE IN THE FIELD.
24. ALL UNITS SHALL BE BALANCED TO WITHIN 10 PERCENT OF THE DESIGN AIR QUANTITY. BALANCE DIFFUSERS AND REGISTERS TO WITHIN 10% OF QUANTITIES SHOWN ON DRAWINGS.
25. PROVIDE FLEXIBLE NEOPRENE DUCT CONNECTORS ON THE DISCHARGE AND ENTERING SIDES OF ALL VIBRATING EQUIPMENT TO WHICH DUCTWORK IS ATTACHED.
26. CONTRACTOR SHALL PROVIDE A COPY OF A TEST AND BALANCE REPORT. AIR BALANCING SHALL BE PERFORMED BY AN INDEPENDENT TESTING AND BALANCING CONTRACTOR WHICH SHALL BE QUALIFIED AND CERTIFIED BY EITHER ASSOCIATED AIR BALANCE COUNCIL (AABC) OR NATIONAL ENVIRONMENTAL BALANCING BUREAU (NEBB). THIS REPORT MUST BE REVIEWED AND APPROVED BY THE ENGINEER PRIOR TO THE FINAL INSPECTION.
27. THE GENERAL CONTRACTOR IS RESPONSIBLE FOR ALL TRADES INSTALLATION SCHEDULES. FIXED WORK SUCH AS DUCTWORK AND PLUMBING SHALL BE INSTALLED PRIOR TO ANY TRADE WORK THAT CAN BE EASILY RELOCATED OR OFFSET SUCH AS ELECTRICAL CONDUITS, SMALL WATER LINES ETC.
28. WHEN THE INTENT OF ARCHITECT/ENGINEER WITH REGARD TO ANY DETAIL IS NOT CLEAR, OR IS CAPABLE OF MORE THAN ONE INTERPRETATION, SUCH MATTERS WILL BE BROUGHT TO THE ATTENTION OF THE ARCHITECT/ENGINEER IN WRITING BEFORE THE SUBMISSION OF BIDS, AND THE ARCHITECT/ENGINEER SHALL MAKE CORRECTION OR EXPLANATION IN WRITING. OTHERWISE, NO EXTRA CHARGE WILL BE ALLOWED FOR THE WORK OR MATERIAL WHICH THE ARCHITECT/ENGINEER WILL REQUIRE, PROVIDED THAT IT COMES WITHIN A REASONABLE INTERPRETATION OF THE DRAWINGS AND SPECIFICATIONS.
29. PLANS AND SPECIFICATIONS ARE INTENDED AS A GENERAL DESCRIPTION OF THE WORK TO BE PERFORMED. ALL ITEMS NOT SPECIFICALLY MENTIONED OR SHOWN, BUT NECESSARY FOR THE COMPLETION OF THE INSTALLATION, SHALL BE FURNISHED AND INSTALLED BY THIS CONTRACTOR. THIS CONTRACTOR SHALL THOROUGHLY ACQUAINT HIMSELF WITH THE MECHANICAL, ARCHITECTURAL, STRUCTURAL AND ELECTRICAL PLANS BEFORE SUBMITTING HIS FINAL BID. NO ADDITIONAL COMPENSATION WILL BE ALLOWED DUE TO THE CONTRACTOR'S FAILURE TO FAMILIARIZE HIMSELF/HERSELF WITH THE PLANS.

cph
www.cphcorp.com
A Full Service A & E Firm
5200 Belfort Road Jacksonville, FL 32256
Phone: 904.332.0999
Licenses:
Eng. C.O.A. No. 3215 Arch. Lic. No. AA2600926
Survey L.B. No. 7143 Landscape Lic. No. LC0000298

NO.	BY	DATE	REVISIONS
6.			
5.			
4.			
3.			
2.			
1.			

DESIGN ENGINEER
DENNIS L. MATULA
FLORIDA REGISTRATION NO.
55194

DESIGNER:	JAD
DRAWN BY:	JAD
DATE:	02/14/2017
CHECKED BY:	DLM
DATE:	02/14/2017

JEA Building Community℠

MECHANICAL ABBREVIATIONS AND GENERAL NOTES

NO. SHEETS 26	PROJ. NO. J6606
SHEET NO. 13	DATE: FEBRUARY 2017
DRAWING NO. M-06	SCALE: 1/4"=1'-0"

U:\J6606\Received\CPH Mep\2-14-2017\J6606_M-1 MECHANICAL ABBREVIATIONS AND GENERAL NOTES.dwg Current Layout Tab = M-01 Thu Feb 23, 2017 - 11:42
Xrefs Attached= JTSHT2011 [..\JTSHT2011.dwg]

SPLIT SYSTEM AIR CONDITIONER SCHEDULE

TAG	INDOOR UNIT													OUTDOOR UNIT														
	AREA	TYPE	SA CFM	OA CFM	ESP IN. WC	COOLING CAPACITY				SHIPPING WEIGHT (LBS)	FAN MOTOR HP	V/PH/HZ	FILTER TYPE	MFR MODEL	NOM. TONS	AMBIENT TEMP.	COMPRESSOR			CONDENSOR FAN			UNIT MCA	V/PH/HZ	SHIPPING WEIGHT	MFR./MODEL	REFRIG. TYPE	NOTES	EER	IPLV (SYSTEM)
						TOTAL (MBH)	SENSIBLE (MBH)	EAT °F (DB/WB)	LAT °F (DB/WB)								QTY.	RLA (EA.)	LRA (EA.)	QTY.	HP (EA.)	FLA (EA.)								
AHU–1 CU–1	ELECTRICAL ROOM	VERTICAL	1750	0	0.5	59.08	42.04	80/67	57.7/56.3	207	3/4	208/1/60	MERV8	FV4CNB006L00	5	95	1	7.8	52	1		0.6	10.4	460/3/60	282	CARRIER 25HCD360A006	R–410A	1,2	11.5	13.5

NOTES:

1. PROVIDE AUXILIARY DRAIN PAN WITH OVERFLOW SWITCH AND CONTROL VOLTAGE CONDENSATE PUMP.
2. CONDENSER COIL, EVAPORATOR COIL, AND REFRIGERANT PIPING TO BE COATED WITH BRONZ–GLOW COATING.
3. CARRIER HAS BEEN USED FOR BASIS OF DESIGN. TRANE AND AMERICAN STANDARD ARE APPROVED EQUALS.

DIFFUSER AND GRILLE SCHEDULE

TAG	TYPE	BASIS OF DESIGN	MODEL	AIR FLOW	SIZE
SD–1	SIDE WALL SUPPLY	TITUS	300FL	1750 CFM	24X24
RG–1	SIDE WALL RETURN	TITUS	350FL	1750 CFM	24X24

NOTES:
1. ADJUST THROW PATTERN FOR EVEN DISTRIBUTION

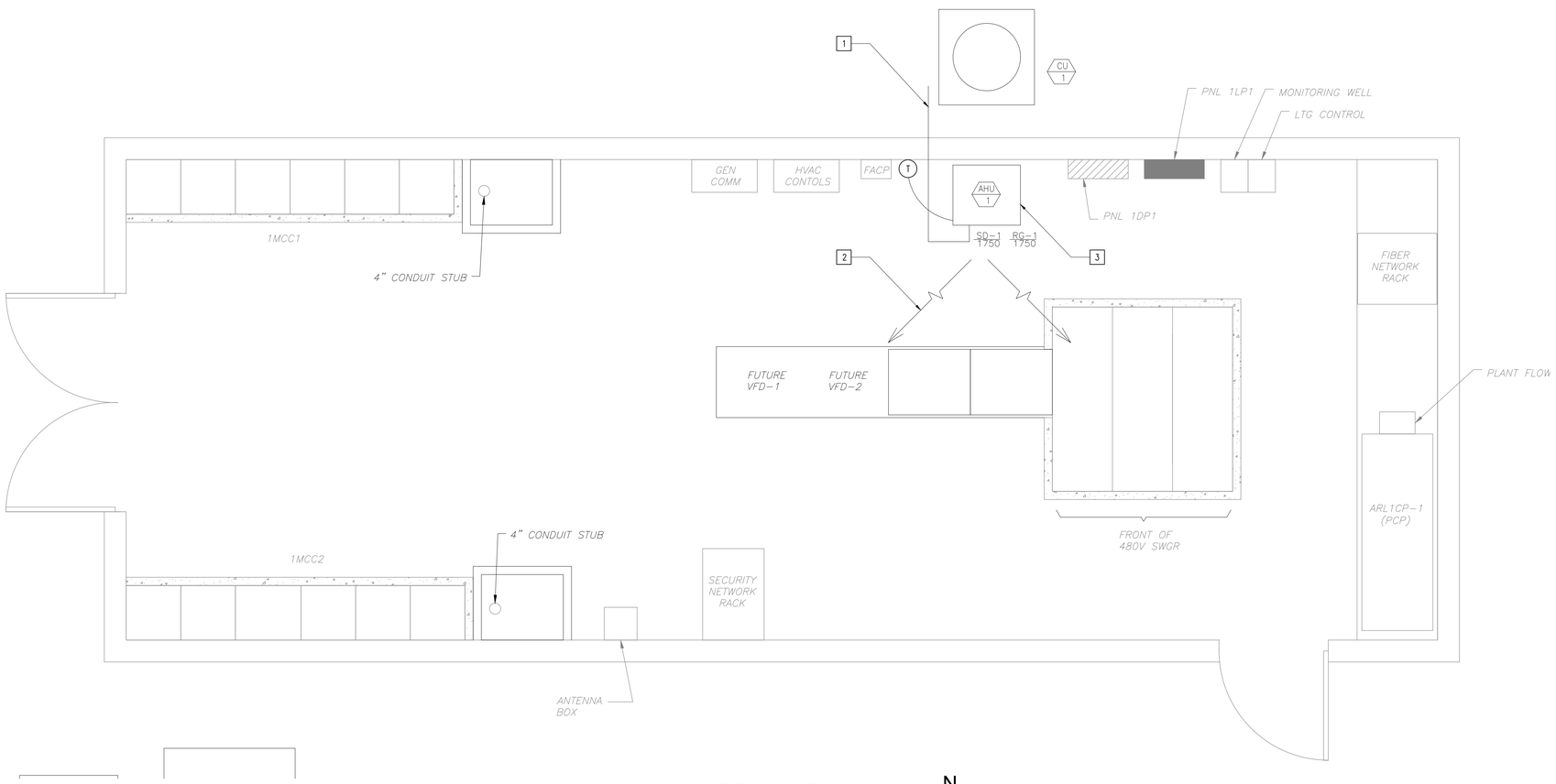

1 M-07 MECHANICAL PLAN
SCALE: 1/2" =1'-0"

N

MECHANICAL KEY NOTES

1. ROUTE CONDENSATE THROUGH EXTERIOR WALL TO LANDSCAPE. TERMINATE CONDENSATE INDIRECT TO GREEN SPACE A MINIMUM OF 1'–0" FROM EXTERIOR WALL. INSULATE CONDENSATE LINE WITH 3/4" ARMAFLEX. SEAL ALL LONGITUDINAL AND BUTT JOINTS.
2. POSITION SUPPLY GRILLE BLADES FOR EVEN DISTRIBUTION.
3. INSTALL 26" WIDE BY 24" DEEP HOUSE KEEPING PAD. SEE DETAIL 7/M–05.

cph
A Full Service A & E Firm
5200 Belfort Road Jacksonville, FL 32256
Phone: 904.363.9928
Licenses:
Arch. Lic. No. AA26000526
Eng. C.O.A. No. 3215 Survey L.B. No. 7143 Landscape L.C. No. LC26000288
www.cphcorp.com

NO.	BY	DATE	REVISIONS
6.			
5.			
4.			
3.			
2.			
1.			

DESIGN ENGINEER
DENNIS L. MATIULA
FLORIDA REGISTRATION NO.
55194

DESIGNER: JAD
DRAWN BY: JAD
DATE: 02/14/2017
CHECKED BY: DLM
DATE: 02/14/2017

JEA sm
Building Community sm

HVAC PLAN

PROJ. NO. J6606
DATE: FEBRUARY 2017
SCALE: 1/4"=1'-0"

NO. SHEETS 26
SHEET NO. 14
DRAWING NO. M-07

U:\J6606\Received\CPH Mep\2-14-2017\J6606_M-2 HVAC PLAN.dwg Current Layout Tab = M-02 Thu Feb 23, 2017 - 11:45
Xrefs Attached= JTSHT2011 [.\JTSHT2011.dwg]
E-8 ELEC PLAN [.\E-8 ELEC PLAN.dwg]

PLAN SYMBOLS

- HOME RUN TO PANELBOARD. NO. OF ARROWS INDICATE NO. OF CIRCUITS, HASH MARKS INDICATE NO. OF #12 AWG. CONDUCTORS. NO HASH MARKS INDICATE 2 #12 CONDUCTORS.
- CONDUIT CONCEALED IN WALL, IN SLAB ABOVE, OR ABOVE CEILING
- CONDUIT CONCEALED IN OR BELOW FLOOR OR UNDERGROUND.
- CONDUIT RUN EXPOSED. RUN PARALLEL OR PERPENDICULAR TO STRUCTURE OR WALL.
- FLEXIBLE CONDUIT WITH EQUIPMENT CONNECTION.
- WALL MOUNTED LIGHTING FIXTURE.
- LED LIGHTING FIXTURE, CEILING MOUNTED.
- A — LED LUMINAIRE AND MOUNTING STANDARD. LETTER DESIGNATES FIXTURE TYPE
- EMERGENCY BATTERY PACK LIGHTING FIXTURE.
- J — JUNCTION BOX N.E.C. SURFACE MOUNTED UNLESS INDICATED OTHERWISE.
- J — JUNCTION BOX PER N.E.C., FLUSH MOUNTED UNLESS INDICATED OTHERWISE.
- 30 — DRY TYPE TRANSFORMER. NO. INDICATES KVA RATING.
- 30 — LIQUID FILLED TRANSFORMER, KVA RATING AS SHOWN
- 20A, 125V, 3W DUPLEX RECEPTACLE IN FLUSH OUTLET BOX, 18" ABOVE FINISHED FLOOR.
- 20A, 125V, 3W DUPLEX RECEPTACLE, SURFACE MOUNTED.
- SURFACE MOUNTED GROUND FAULT DUPLEX WEATHERPROOF RECEPTACLE 20A, 125V, 3W – MOUNTED 24" ABOVE FINISHED FLOOR, UNLESS OTHERWISE NOTED.
- DISCONNECT RACK MOUNTED.
- OFF REMOTE/DISCONNECT RACK MOUNTED WITH NEMA 4X SS JUNCTION BOX MOUNTED BELOW OFF REMOTE
- S — SINGLE POLE SWITCH IN FLUSH OUTLET BOX, 48" ABOVE FINISHED FLOOR, UNLESS OTHERWISE NOTED (TYPICAL).
- S — SINGLE POLE SWITCH, SURFACE MOUNTED.
- S_3 — THREE–WAY SWITCH IN FLUSH OUTLET BOX.
- NON–FUSIBLE DISCONNECT SWITCH, 30A,3P UNLESS OTHERWISE INDICATED.
- 30/20 — NON–FUSIBLE DISCONNECT SWITCH, 30A,3P UNLESS OTHERWISE INDICATED, WITH REMOTE CONTROL STATION AS REQUIRED BY ELEMENTARY DIAGRAMS OR SPECS.
- 10 — ELECTRIC A.C. MOTOR, NO. INDICATES HORSEPOWER.
- T — THERMOSTAT
- ELECTRIC HEATER
- FE — FLOW ELEMENT
- LS — LIMIT SWITCH
- LLS — LIQUID LEVEL SWITCH
- PIT — PRESSURE INDICATING TRANSMITTER
- FIT — FLOW INDICATING TRANSMITTER
- TSH — TEMPERATURE SWITCH HIGH
- MSH — MOTOR SPACE HEATER

SINGLE LINE DIAGRAM SYMBOLS

- COMBINATION MOTOR STARTER
- FUSE
- CAPACITOR
- MOLDED CASE CIRCUIT BREAKER
- TYPICAL SELECTOR SWITCH AND CONTROL. SEE ELEMENTARY DIAGRAMS FOR EXACT TYPE.
- 10 — ELECTRIC A.C. MOTOR, NO. INDICATES HORSEPOWER.
- SERVICE OR EQUIPMENT GROUND.
- NON–FUSIBLE DISCONNECT SWITCH, 30A,3P UNLESS OTHERWISE INDICATED.
- 120/208/240V LIGHTING PANELBOARD
- 480V POWER PANELBOARD.
- JB — JUNCTION BOX
- PS — PRESSURE SWITCH
- LS — LIMIT SWITCH
- LLS — TEMPERATURE SWITCH HIGH
- LS — LIMIT SWITCH
- MSH — MOTOR SPACE HEATER
- O/R — OFF/REMOTE

CONTROL DIAGRAM SYMBOLS

- NORMALLY OPEN CONTACT
- NORMALLY CLOSED CONTACT
- LIMIT SWITCH, NORMALLY OPEN
- LIMIT SWITCH, NORMALLY CLOSED
- PRESSURE SWITCH, NORMALLY OPEN
- PRESSURE SWITCH, NORMALLY CLOSED
- FLOAT SWITCH, NORMALLY OPEN
- FLOAT SWITCH, NORMALLY CLOSED
- FLOW SWITCH, NORMALLY OPEN
- FLOW SWITCH, NORMALLY CLOSED
- TEMPERATURE SWITCH, NORMALLY OPEN
- TEMPERATURE SWITCH, NORMALLY CLOSED
- NORMALLY OPEN, TIMED TO CLOSE CONTACT
- NORMALLY CLOSED, TIMED TO OPEN CONTACT
- NORMALLY CLOSED, TIMED TO CLOSE CONTACT
- NORMALLY OPEN, TIMED TO OPEN CONTACT
- AR — ALARM RELAY
- AT — ALARM TIMER
- CR — CONTROL RELAY
- M — MOTOR STARTER
- TR — TIMING RELAY
- A — ALARM INDICATING LIGHT
- R — RUN INDICATING LIGHT
- MOMENTARY CONTACT PUSHBUTTON
- MOMENTARY BREAK PUSHBUTTON OR RESET
- THREE POSITION MAINTAINED CONTACT SELECTOR SWITCH
- FUSE
- MOLDED CASE CIRCUIT BREAKER
- CONTROL POWER TRANSFORMER
- REMOTE TERMINAL BLOCK POINT

ABBREVIATIONS

A	AMPERES
ACCU	AIR COOLED CONDENSING UNIT
AF	AMP FRAME
AFF	ABOVE FINISHED FLOOR
AHU	AIR HANDLING UNIT
AIC	AMPS INTERRUPTING CURRENT
AT	AMP TRIP
BKR	BREAKER
BLDG	BUILDING
C	CONDUCTOR
CP	CONTROL PANEL
CPT	CONTROL POWER TRANSFORMER
CT	CURRENT TRANSFORMER
DISC	DISCONNECT
DWG	DRAWING
ENCL	ENCLOSURE
EXH	EXHAUST
EXIST	EXISTING
FPL	FLORIDA POWER AND LIGHT
FVNR	FULL VOLTAGE NON–REVERSING
GFR	GROUND FAULT RECEPTACLE
GFI	GROUND FAULT INTERRUPTER
GND	GROUND
GRS	GALVANIZED RIGID STEEL
GSR	GROUND STORAGE RESEVOIR
HOA	HAND–OFF–AUTOMATIC
HSP	HIGH SERVICE PUMP
HP	HORSEPOWER
KAIC	KILO AMPS INTERRUPTING CAPACITY
KVA	KILO VOLT–AMPERES
KW	KILOWATT
LTG	LIGHTING
LP	LOOP NUMBER
MAX	MAXIMUM
MCC	MOTOR CONTROL CENTER
MIN	MINIMUM
MLO	MAIN LUGS ONLY
MSC	MANUFACTURERS SUPPLIED CABLE
MTD	MOUNTED
NEC	NATIONAL ELECTRICAL CODE
N	NEUTRAL
NTS	NOT TO SCALE
OH	OVERHEAD
P	POLE
PCP	PROCESS CONTROL PANEL
PIT	PRESSURE INDICATING TRANSMITTER
PM	PHASE MONITOR
PMP	PRESSURE MONITORING PANEL
PNL	PANEL
PVC	POLYVINYL CHLORIDE
RTU	REMOTE TELEMETRY UNIT
SH	SHIELDED
SPD	SURGE PROTECTION DEVICE
SS	STAINLESS STEEL
SSS	SOLID STATE STARTER
STR	STARTER
SWBD	SWITCHBOARD
SWGR	SWITCHGEAR
TBR	TO BE REMOVED
TC	TERMINATION CABINET
TYP	TYPICAL
UG	UNDERGROUND
UPS	UNINTERRUPTABLE POWER SUPPLY
V	VOLT
VFD	VARIABLE FREQUENCY DRIVE
W	WATT
W/	WITH
WP	WEATHERPROOF
WTP	WATER TREATMENT PLANT
ø	PHASE

NOTES

1. ELECTRICAL CONTRACTOR SHALL SUPPLY AND INSTALL ALL NEW ELECTRICAL WORK INDICATED.
2. ELECTRICAL CONTRACTOR SHALL VISIT JOB SITE AND FAMILIARIZE HIMSELF WITH ALL CONDITIONS AFFECTING ELECTRICAL INSTALLATION AND MAKE PROVISIONS AS TO THE COST THEREOF. EXISTING CONDITIONS OF ELECTRICAL EQUIPMENT, LIGHT FIXTURES, ETC... THAT ARE PART OF THE FINAL SYSTEM SHALL BE VERIFIED BY THE CONTRACTOR PRIOR TO SUBMITTING HIS BID.
3. ALL WORK SHALL BE DONE IN ACCORDANCE WITH NATIONAL ELECTRICAL CODE AND SHALL COMPLY WITH ALL LOCAL RULES AND ORDINANCES.
4. MINIMUM WIRE SIZE SHALL BE #12 A.W.G. EXCLUDING CONTROL WIRING, UNLESS OTHERWISE NOTED.
5. IT IS NOT THE INTENT OF THESE PLANS TO SHOW EVERY MINOR DETAIL OF CONSTRUCTION. THE CONTRACTOR IS EXPECTED TO FURNISH AND INSTALL ALL ITEMS FOR A COMPLETE ELECTRICAL SYSTEM AND PROVIDE ALL REQUIREMENTS NECESSARY FOR THE EQUIPMENT TO BE PLACED IN PROPER WORKING ORDER.
6. ELECTRICAL SYSTEM SHALL BE COMPLETE AND EFFECTIVELY GROUNDED AS REQUIRED BY THE LATEST EDITION OF THE N.E.C. OR LOCAL CODES. ALL CONDUITS SHALL HAVE A BOND WIRE SIZED PER TABLE 250–122 OF THE NATIONAL ELECTRIC CODE.
7. ALL MATERIALS SHALL BE NEW AND BEAR UNDERWRITERS' LABELS WHERE APPLICABLE.
8. ALL WORK SHALL BE PERFORMED BY A LICENSED ELECTRICAL CONTRACTOR IN A FIRST CLASS WORKMANLIKE MANNER. THE COMPLETED SYSTEM SHALL BE FULLY OPERATIVE AND ACCEPTED BY ENGINEER/OWNER.
9. CONTRACTOR SHALL GUARANTEE ALL MATERIALS AND WORKMANSHIP FREE FROM DEFECTS FOR A PERIOD OF NOT LESS THAN TWO YEARS FROM DATE OF SUBSTANTIAL COMPLETION.
10. CORRECTION OF ANY DEFECTS SHALL BE COMPLETED WITHOUT ADDITIONAL CHARGE AND SHALL INCLUDE REPLACEMENT OR REPAIR OF ANY OTHER PHASE OF THE INSTALLATION WHICH MAY HAVE BEEN DAMAGED.
11. CONTRACTOR SHALL BE RESPONSIBLE FOR ALL CUTTING AND PATCHING REQUIRED OF HIS WORK.
12. ELECTRICAL CONTRACTOR SHALL LABEL ALL PANELS W/ TYPE WRITTEN DIRECTORIES (NEW & EXISTING).
13. ALL ELECTRICAL WIRING SHALL BE THE RESPONSIBILITY OF THE ELECTRICAL CONTRACTOR.
14. DO NOT SCALE THE ELECTRICAL DRAWINGS. REFER TO THE MECHANICAL DRAWINGS & THE APPROVED MANUFACTURER'S SHOP DRAWINGS FOR THE EXACT LOCATION OF ALL EQUIPMENT.
15. NON–SHADED TEXT DENOTES NEW EQUIPMENT, STRUCTURES AND WORK. *SHADED AND SLANTED* TEXT DENOTES EXISTING EQUIPMENT OR STRUCTURES.
16. ALL CONTROL PANELS SHALL BE UL LISTED AND SHALL COMPLY WITH ARTICLE 409 OF THE NEC.
17. ALL EMPTY CONDUITS TO BE INSTALLED WITH PULLSTRING.

10503 griffin road, suite 202
cooper city, florida 33328
phone: (954) 446–7930
fax: (954) 680–8101
Stephen E. Bailey, P.E.
Florida P.E. No. 42461

REVISIONS

NO.	BY	DATE
6.	X	X
5.	X	X
4.	X	X
3.	X	X
2.	X	X
1.	X	X

DESIGN ENGINEER: STEPHEN E. BAILEY
FLORIDA REGISTRATION NO. 42461

DESIGNER: SEB
DRAWN BY: SDV
DATE: FEBRUARY 2017
CHECKED BY:
DATE: FEBRUARY 2017

JEA Building Community.com

ARLINGTON WATER TREATMENT PLANT
HIGH SERVICE PUMP REPLACEMENT
ELECTRICAL NOTES, SYMBOLS & ABBREVIATIONS

PROJ. NO. J6606
DATE: FEBRUARY 2017
SCALE: AS NOTED

NO. SHEETS 26
SHEET NO. 15
DRAWING NO. E-01

K:\Active Projects\CPH\JEA\Arlington WTP HSP Replacement\05_100% Submittal\Dwgs\E-1 NOTES.dwg, 24 X 36, 2/14/2017 5:11:11 PM, dmartin

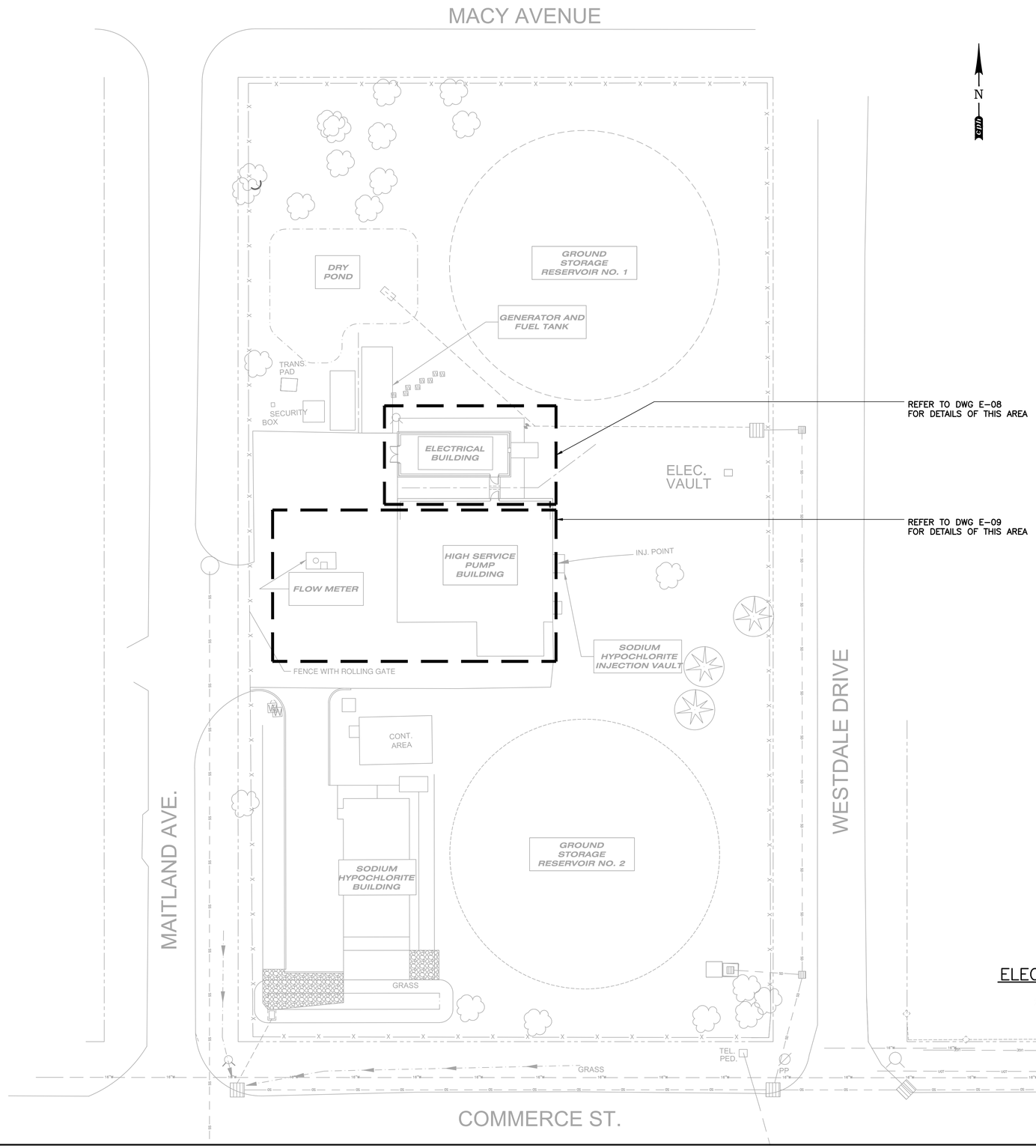

ELECTRICAL SITE PLAN

SCALE: 1"=20'-0"

20 10 0 20'

PROJECT LOCATION ADDRESS
1425 MAITLAND AVENUE
JACKSONVILLE, FL 32211

10503 GRIFFIN ROAD, SUITE 202
COOPER CITY, FLORIDA 33328
PHONE: (954) 448-7930
CERTIFICATE OF AUTHORIZATION NO. 27000
Stephen E. Bailey, P.E.
Florida P.E. No. 42461

NO.	BY	DATE	REVISIONS
6.	X	X	X
5.	X	X	X
4.	X	X	X
3.	X	X	X
2.	X	X	X
1.	X	X	X

DESIGN ENGINEER:
STEPHEN E. BAILEY
FLORIDA REGISTRATION NO.
42461

DESIGNER: SEB
DRAWN BY: SDV
DATE: FEBRUARY 2017
CHECKED BY:
DATE: FEBRUARY 2017

JEA Building Community sm

ARLINGTON WATER TREATMENT PLANT
HIGH SERVICE PUMP REPLACEMENT
ELECTRICAL SITE PLAN

PROJ. NO. J6606
DATE: FEBRUARY 2017
SCALE: AS NOTED

NO. SHEETS 26
SHEET NO. 16
DRAWING NO. E-02

X:\Active Projects\CPH\JEA\Arlington WTP HSP Replacement\05_100% Submittal\Dwgs\E-2 OVERALL SITE LOCATION MAP.dwg, 24 X 36, 2/14/2017 5:12:21 PM, jbrandin

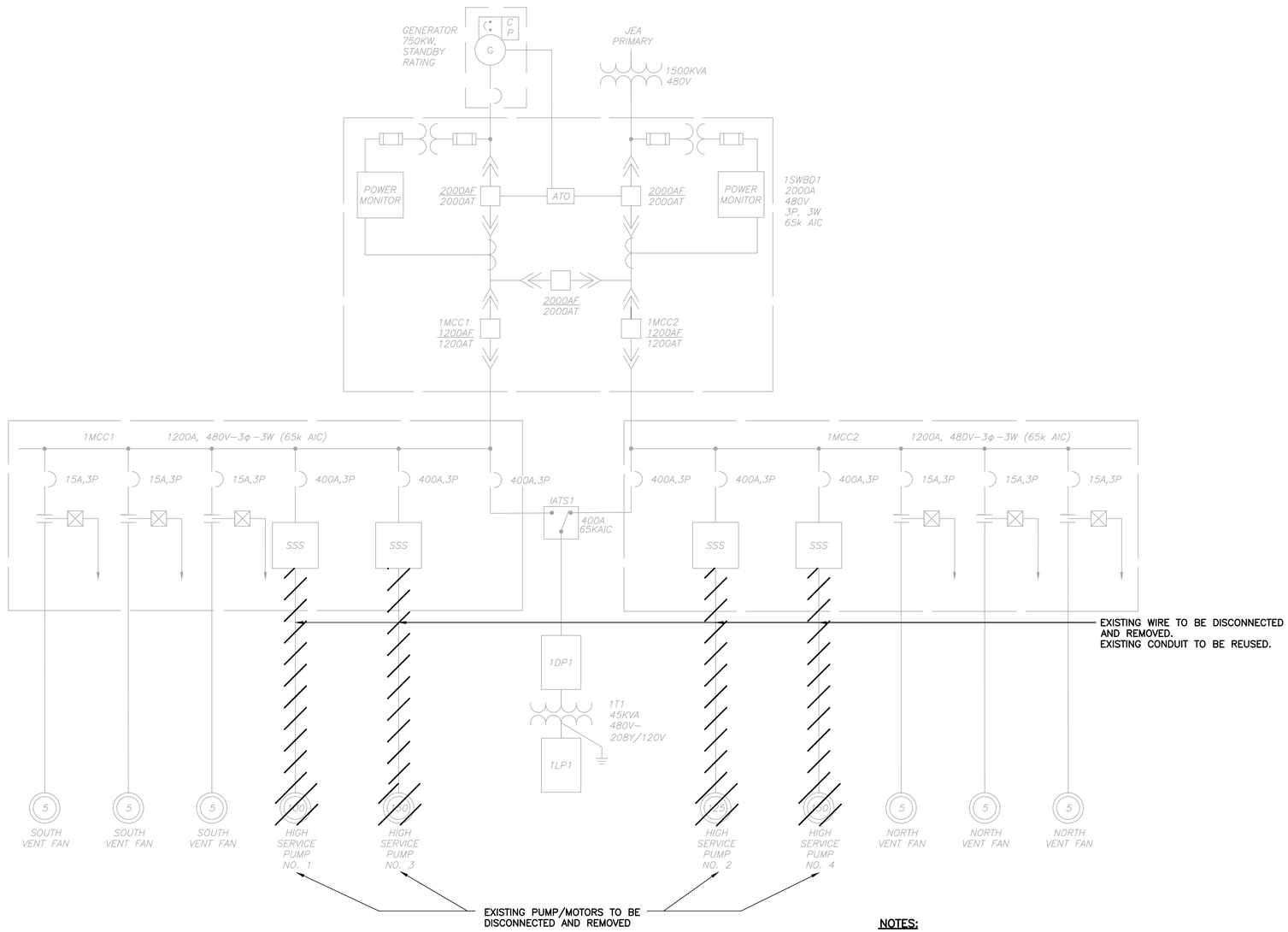

NOTES:

1. REFER TO DEMOLITION PLAN FOR SEQUENCE OF CONSTRUCTION

DEMOLITION SINGLE LINE DIAGRAM

10503 GRIFFIN ROAD, SUITE 202
COOPER CITY, FLORIDA 33328
PHONE: (954) 448-7930
Cert. No. 27979
Stephen E. Bailey, P.E.
Florida P.E. No. 42461

NO.	BY	DATE	REVISIONS
6.	X	X	X
5.	X	X	X
4.	X	X	X
3.	X	X	X
2.	X	X	X
1.	X	X	X

DESIGN ENGINEER:
STEPHEN E. BAILEY
FLORIDA REGISTRATION NO.
42461

DESIGNER: SEB
DRAWN BY: SDV
DATE: FEBRUARY 2017
CHECKED BY:
DATE: FEBRUARY 2017

JEA Building Community.com

ARLINGTON WATER TREATMENT PLANT
HIGH SERVICE PUMP REPLACEMENT
DEMOLITION SINGLE LINE DIAGRAM

PROJ. NO. J6606
DATE: FEBRUARY 2017
SCALE: AS NOTED

NO. SHEETS 26
SHEET NO. 17
DRAWING NO. E-03

X:\Active Projects\CPA\JEA\Arlington WTP HSP Replacement\05_100% Submittal\Dwg\E-3 SLD\E-03.dwg ,JAX 36, 2/14/2017 5:11:31 PM, drhartin

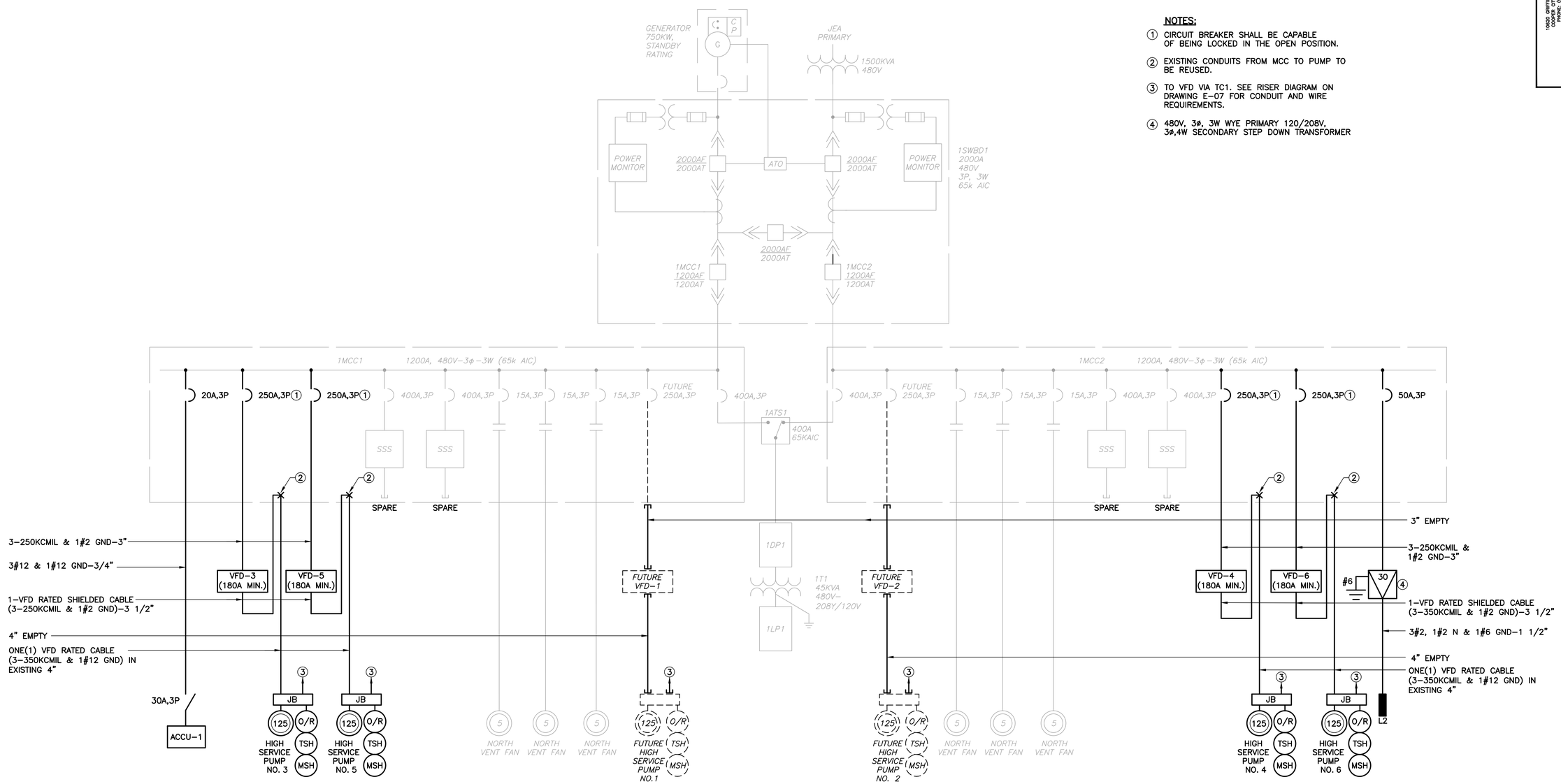

NOTES:

1. CIRCUIT BREAKER SHALL BE CAPABLE OF BEING LOCKED IN THE OPEN POSITION.
2. EXISTING CONDUITS FROM MCC TO PUMP TO BE REUSED.
3. TO VFD VIA TC1. SEE RISER DIAGRAM ON DRAWING E–07 FOR CONDUIT AND WIRE REQUIREMENTS.
4. 480V, 3ø, 3W WYE PRIMARY 120/208V, 3ø,4W SECONDARY STEP DOWN TRANSFORMER

PROPOSED SINGLE LINE DIAGRAM

10503 GRIFFIN ROAD, SUITE 202
COOPER CITY, FLORIDA 33328
PHONE: (954) 448-7930
CERTIFICATE OF AUTHORIZATION NO. 27000
Stephen E. Bailey, P.E.
Florida P.E. No. 42461

NO.	BY	DATE	REVISIONS
6.	X	X	X
5.	X	X	X
4.	X	X	X
3.	X	X	X
2.	X	X	X
1.	X	X	X

DESIGN ENGINEER: STEPHEN E. BAILEY
FLORIDA REGISTRATION NO. 42461

DESIGNER: SEB
DRAWN BY: SDV
DATE: FEBRUARY 2017
CHECKED BY:
DATE: FEBRUARY 2017

JEA Building Community sm

ARLINGTON WATER TREATMENT PLANT HIGH SERVICE PUMP REPLACEMENT PROPOSED SINGLE LINE DIAGRAM

PROJ. NO. J6606
DATE: FEBRUARY 2017
SCALE: AS NOTED

NO. SHEETS 26
SHEET NO. 18
DRAWING NO. E-04

X:\Active Projects\CPH\JEA\Arlington WTP HSP Replacement\05_100% Submittal\Dwgs\E-4 PROP SLD\E-04.dwg 24 X 36, 2/14/2017 5:14:41 PM, dmartin

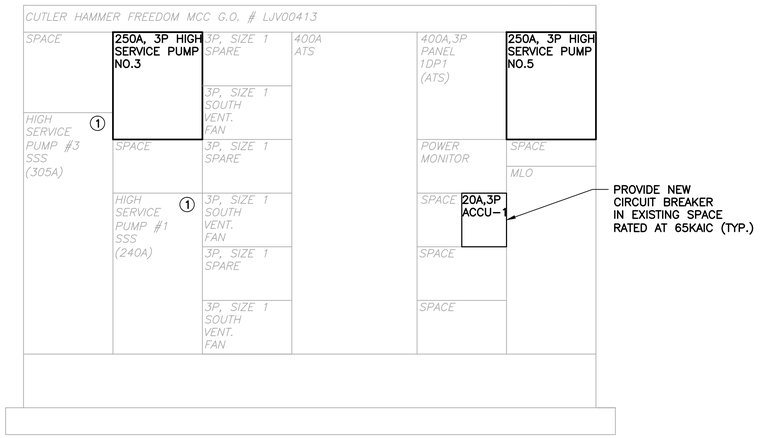

EXISTING 1MCC1 MODIFICATIONS

N.T.S.

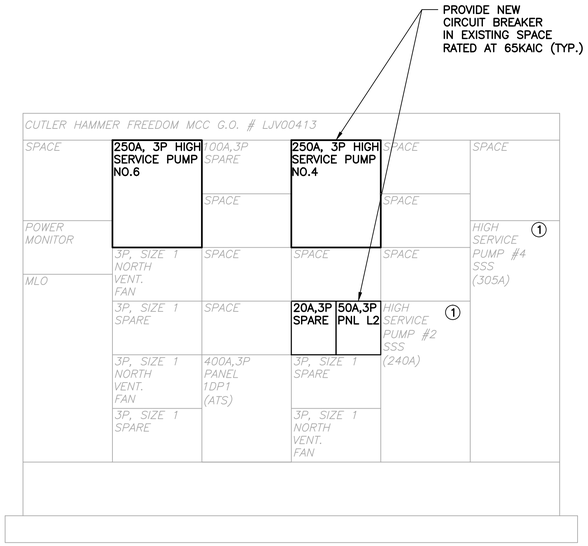

EXISTING 1MCC2 MODIFICATIONS

N.T.S.

NOTES:

1. EXISTING SSS SECTION TO BE RELABELED AS SPARE ONCE NEW SERVICE PUMP ARE ONLINE AS SHOWN ON DRAWING E-04 .

10503 GRIFFIN ROAD, SUITE 202
COOPER CITY, FLORIDA 33328
PHONE: (954) 448-7930
CERTIFICATE OF AUTHORIZATION
Stephen E. Bailey, P.E.
Florida P.E. No. 42461

NO.	BY	DATE	REVISIONS
6.	X	X	X
5.	X	X	X
4.	X	X	X
3.	X	X	X
2.	X	X	X
1.	X	X	X

DESIGN ENGINEER:
STEPHEN E. BAILEY
FLORIDA REGISTRATION NO.
42461

DESIGNER: SEB
DRAWN BY: SDV
DATE: FEBRUARY 2017
CHECKED BY:
DATE: FEBRUARY 2017

JEA Building Community.com

ARLINGTON WATER TREATMENT PLANT
HIGH SERVICE PUMP REPLACEMENT
EXISTING MCC FRONT VIEW MODIFICATION

PROJ. NO. J6606
DATE: FEBRUARY 2017
SCALE: AS NOTED

NO. SHEETS 26
SHEET NO. 19
DRAWING NO. E-06

X:\Active Projects\CPH\JEA\Arlington WTP HSP Replacement\05_100% Submittal\Dwgs\E-5 MCC.dwg, 24 X 36, 2/14/2017 5:11:51 PM, dmartin

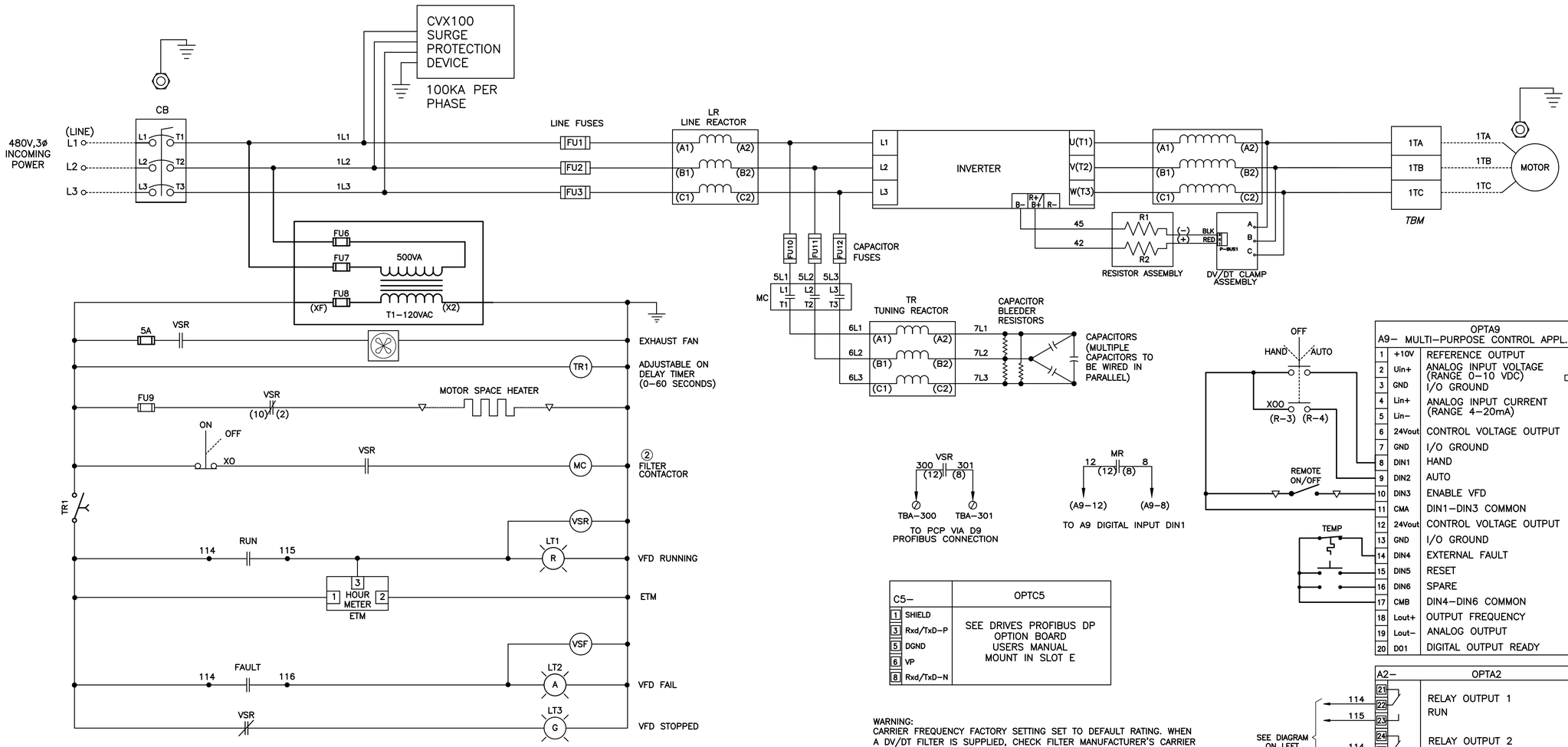

OPTA9		
A9-	MULTI-PURPOSE CONTROL APPL.	
1	+10V	REFERENCE OUTPUT
2	Uin+	ANALOG INPUT VOLTAGE (RANGE 0-10 VDC)
3	GND	I/O GROUND
4	Lin+	ANALOG INPUT CURRENT (RANGE 4-20mA)
5	Lin-	
6	24Vout	CONTROL VOLTAGE OUTPUT
7	GND	I/O GROUND
8	DIN1	HAND
9	DIN2	AUTO
10	DIN3	ENABLE VFD
11	CMA	DIN1-DIN3 COMMON
12	24Vout	CONTROL VOLTAGE OUTPUT
13	GND	I/O GROUND
14	DIN4	EXTERNAL FAULT
15	DIN5	RESET
16	DIN6	SPARE
17	CMB	DIN4-DIN6 COMMON
18	Lout+	OUTPUT FREQUENCY
19	Lout-	ANALOG OUTPUT
20	DO1	DIGITAL OUTPUT READY

X1: 1 A, 2 B, 3 C, 4 D
X2: 5 A, 6 B, 7 C, 8 D
X3: 9
X6: 10 A, 11 B, 12 C, 13 D

C5-	OPTC5
1 SHIELD	SEE DRIVES PROFIBUS DP OPTION BOARD USERS MANUAL. MOUNT IN SLOT E
3 Rxd/TxD-P	
5 DGND	
6 VP	
8 Rxd/TxD-N	

A2-	OPTA2
21, 22 (114)	RELAY OUTPUT 1 RUN
23 (115)	
24, 25 (114)	RELAY OUTPUT 2 FAULT
26 (116)	

SEE DIAGRAM ON LEFT

WARNING:
CARRIER FREQUENCY FACTORY SETTING SET TO DEFAULT RATING. WHEN A DV/DT FILTER IS SUPPLIED, CHECK FILTER MANUFACTURER'S CARRIER FREQUENCY AS IT MAY NOT BE THE SAME AS THE DEFAULT SETTING OF THE DRIVE.

LEGEND

▽ AT MOTOR

Ø TO/FROM PCP

◆ MOUNTED ON PANEL DEADFRONT

NOTES:

1. ENCLOSURE AND MOTOR MUST BE GROUNDED.
2. INTEGRATED SUPPRESSOR 7-150A DC OPERATED CONTRACTORS AND 115-2000A AC AND DC OPERATED CONTRACTORS.

VARIABLE FREQUENCY DRIVE

JEA Building Community
10503 GRIFFIN ROAD, SUITE 202
COOPER CITY, FLORIDA 33328
PHONE: (954) 435-7030
FAX: (954) 435-7031
Stephen E. Bailey, P.E.
Florida P.E. No. 42461

NO.	BY	DATE	REVISIONS
6	X	X	
5	X	X	
4	X	X	
3	X	X	
2	X	X	
1	X	X	

DESIGN ENGINEER: STEPHEN E. BAILEY
FLORIDA REGISTRATION NO. 42461

DESIGNER: SEB
DRAWN BY: SDV
DATE: FEBRUARY 2017
CHECKED BY:
DATE: FEBRUARY 2017

ARLINGTON WATER TREATMENT PLANT
HIGH SERVICE PUMP REPLACEMENT
ELEMENTARY CONTROL DIAGRAMS

PROJ. NO. J6606
DATE: FEBRUARY 2017
SCALE: AS NOTED

NO. SHEETS 26
SHEET NO. 20
DRAWING NO. E-06

X:\Active Projects\CRA\JEA\Arlington WTP HSP Replacement\05_100% Submittal\Dwg\E-6 VFD.dwg 24X 36, 2/14/2017 5:12:01 PM, dmartin

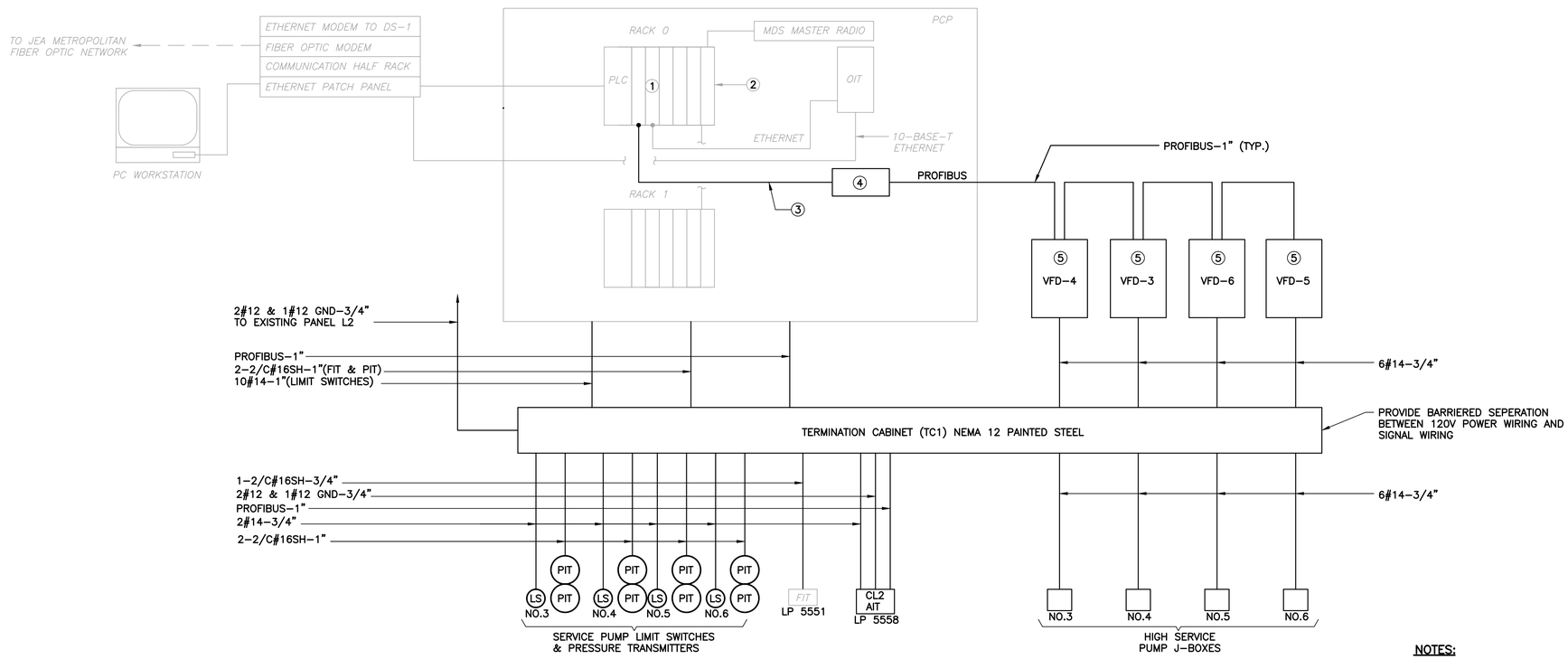

CONTROL WIRING RISER DIAGRAM

NOTES:

1. EXISTING CPU 414-2
2. EXISTING S7-400 PLC
3. INTERCEPT PROFIBUS NETWORK FOR NEW DROPS
4. PROFIBUS SURGE PROTECTOR (CITEL DLA-12D3)
5. REFER TO SPECIFICATION 26 29 23 FOR ADDITIONAL REQUIREMENTS

10503 GRIFFIN ROAD, SUITE 202
COOPER CITY, FLORIDA 33328
PHONE: (954) 445-7930
CA No. 0000 7970
Stephen E. Bailey, P.E.
Florida P.E. No. 42461

NO.	BY	DATE	REVISIONS
6.	X	X	
5.	X	X	
4.	X	X	
3.	X	X	
2.	X	X	
1.	X	X	

DESIGN ENGINEER:
STEPHEN E. BAILEY
FLORIDA REGISTRATION NO.
42461

DESIGNER: SEB
DRAWN BY: SDV
DATE: FEBRUARY 2017
CHECKED BY:
DATE: FEBRUARY 2017

JEA Building Community sm

ARLINGTON WATER TREATMENT PLANT
HIGH SERVICE PUMP REPLACEMENT
CONTROL WIRING RISER DIAGRAMS

PROJ. NO. J6606
DATE: FEBRUARY 2017
SCALE: AS NOTED

NO. SHEETS 26
SHEET NO. 21
DRAWING NO. E-07

X:\Active Projects\CPH\JEA\Arlington WTP HSP Replacement\05_100% Submittal\Dwgs\E-7 RISER DIAGRAMS.dwg, 24 X 36, 2/14/2017 5:12:11 PM, dmartin

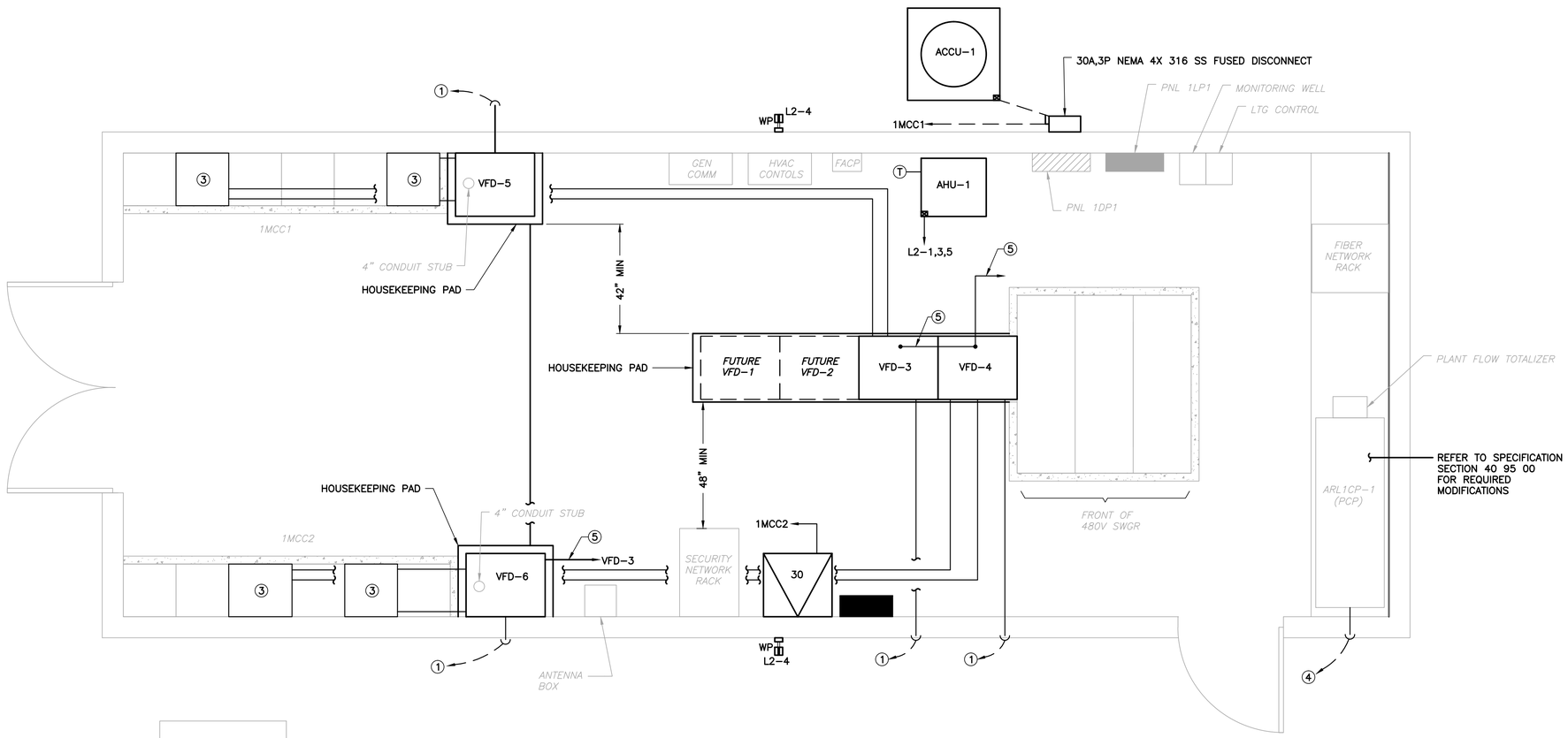

EXISTING ELECTRICAL BUILDING POWER PLAN

SCALE: 1/2"=1'-0"

12" 0 1 3'

NOTES:

1. TO MOTOR SAFETY PROTECTION DEVICES. REFER TO DWG E-07 FOR CONDUIT AND WIRE REQUIREMENTS.
2. PULLBOX FOR CL2, FIT, PIT'S AND HSP MOTOR CONTROL & SAFTEY DEVICES
3. REFER TO MCC FRONT VIEW FOR MODIFICATIONS.
4. PUMP LOW FLOW DEVICE. SEE RISER DIAGRAM ON DRAWING E-07
5. PROFIBUS CONDUIT SEE RISER ON DRAWING E-07 FOR CONDUIT/ WIRE REQUIREMENTS

10003 GRIFFIN ROAD, SUITE 302
COOPER CITY, FLORIDA 33328
PHONE: (954) 448-7930
FAX: (954) 448-7931
Stephen E. Bailey, P.E.
Florida P.E. No. 42461

NO.	BY	DATE	REVISIONS
6.	X	X	
5.	X	X	
4.	X	X	
3.	X	X	
2.	X	X	
1.	X	X	

DESIGN ENGINEER: STEPHEN E. BAILEY
FLORIDA REGISTRATION NO. 42461

DESIGNER: SEB
DRAWN BY: SDV
DATE: FEBRUARY 2017
CHECKED BY:
DATE: FEBRUARY 2017

JEA Building Community

ARLINGTON WATER TREATMENT PLANT
HIGH SERVICE PUMP REPLACEMENT
EXISTING ELECTRICAL BUILDING POWER PLAN

PROJ. NO. J6606
DATE: FEBRUARY 2017
SCALE: AS NOTED

NO. SHEETS 26
SHEET NO. 22
DRAWING NO. E-09

X:\Active Projects\CPH\JEA\Arlington WTP-HSP Replacement\05_100% Submittal\Dwgs\E-8 ELEC PLAN.dwg, 2AX 1k, 2/14/2017 5:12:21 PM, dmartin

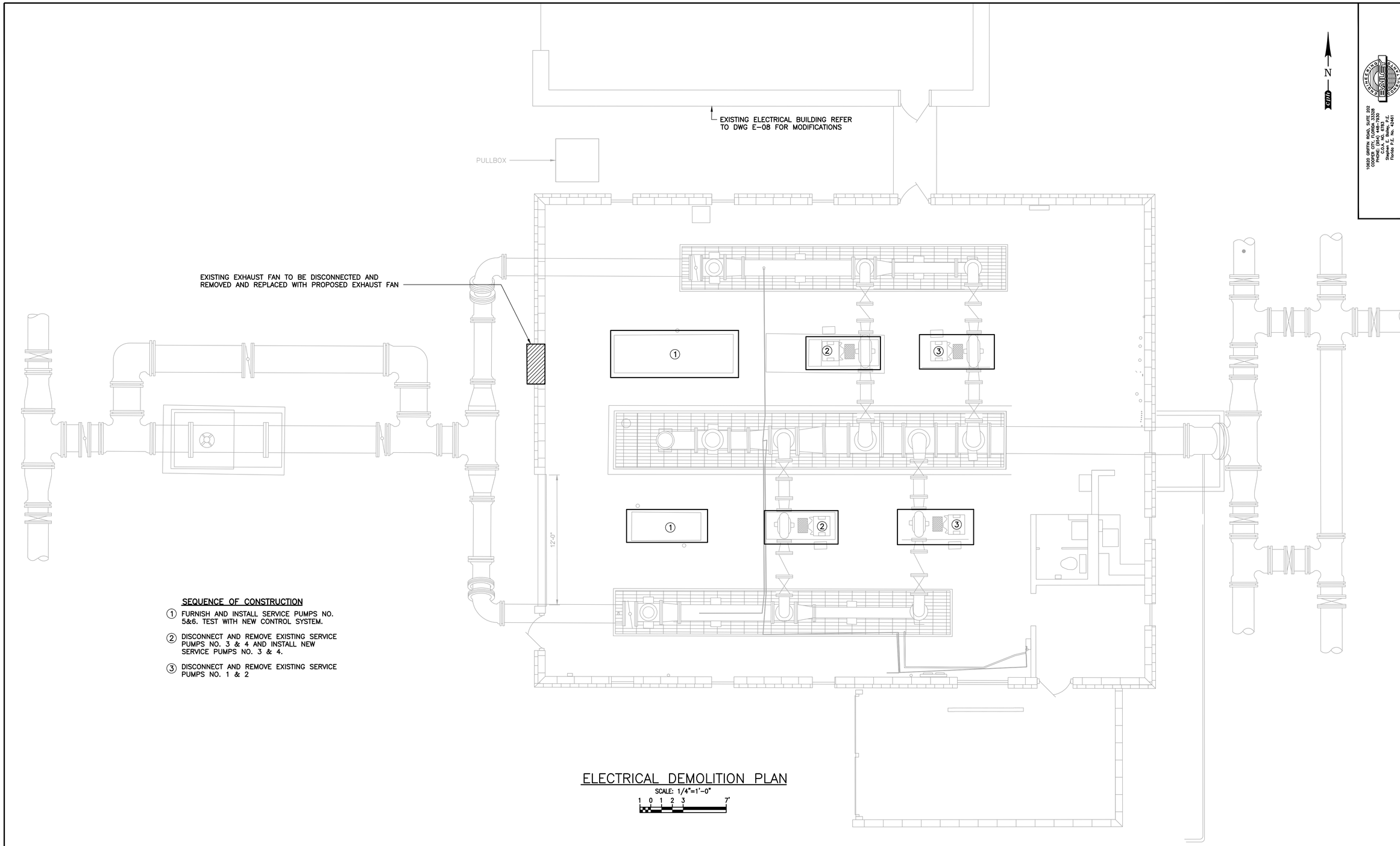

SEQUENCE OF CONSTRUCTION

1. FURNISH AND INSTALL SERVICE PUMPS NO. 5&6. TEST WITH NEW CONTROL SYSTEM.
2. DISCONNECT AND REMOVE EXISTING SERVICE PUMPS NO. 3 & 4 AND INSTALL NEW SERVICE PUMPS NO. 3 & 4.
3. DISCONNECT AND REMOVE EXISTING SERVICE PUMPS NO. 1 & 2

ELECTRICAL DEMOLITION PLAN

SCALE: 1/4"=1'-0"

1 0 1 2 3 7'

10503 griffin road, suite 202
cooper city, florida 33328
phone: (954) 448-7930
cell: (954) 455-8170
stephen e. bailey, p.e.
florida p.e. no. 42461

NO.	BY	DATE	REVISIONS
6.	X	X	X
5.	X	X	X
4.	X	X	X
3.	X	X	X
2.	X	X	X
1.	X	X	X

DESIGN ENGINEER:
STEPHEN E. BAILEY
FLORIDA REGISTRATION NO.
42461

DESIGNER: SEB
DRAWN BY: SDV
DATE: FEBRUARY 2017
CHECKED BY:
DATE: FEBRUARY 2017

JEA sm
Building Community sm

ARLINGTON WATER TREATMENT PLANT
HIGH SERVICE PUMP REPLACEMENT
ELECTRICAL DEMOLITION PLAN

PROJ. NO. J6606
DATE: FEBRUARY 2017
SCALE: AS NOTED

NO. SHEETS 26
SHEET NO. 23
DRAWING NO. E-09

J:\Active Projects\CPH\JEA\Arlington WTP HSP Replacement\05_100% Submittal\Dwgs\E-9 DEMO PLAN.dwg, 24 X 36, 2/14/2017 5:12:32 PM, dmartin

NOTES:

1. DEMOLISH EXISTING PUMPS NO. 1, 2, 3 & 4. EXISTING CONDUIT TO ELECTRICAL BUILDING TO REMAIN. PROVIDE FLUSH CAP FOR CONDUITS TO REMAIN FOR OLD PUMPS NO. 1 & 2.
2. ALL EMPTY CONDUITS TO BE CAPPED AND FLUSHED AT FINISHED FLOOR. REFER TO DETAIL NO. 5, ON DWG E-12
3. PROVIDE BARRIERED SEPARATION BETWEEN 120V POWER AND SIGNAL CABLES.
4. REFER TO RISER DIAGRAM ON DWG E-07 FOR CONDUIT AND WIRE REQUIREMENTS.
5. TO VFD VIA EXISTING CONDUIT

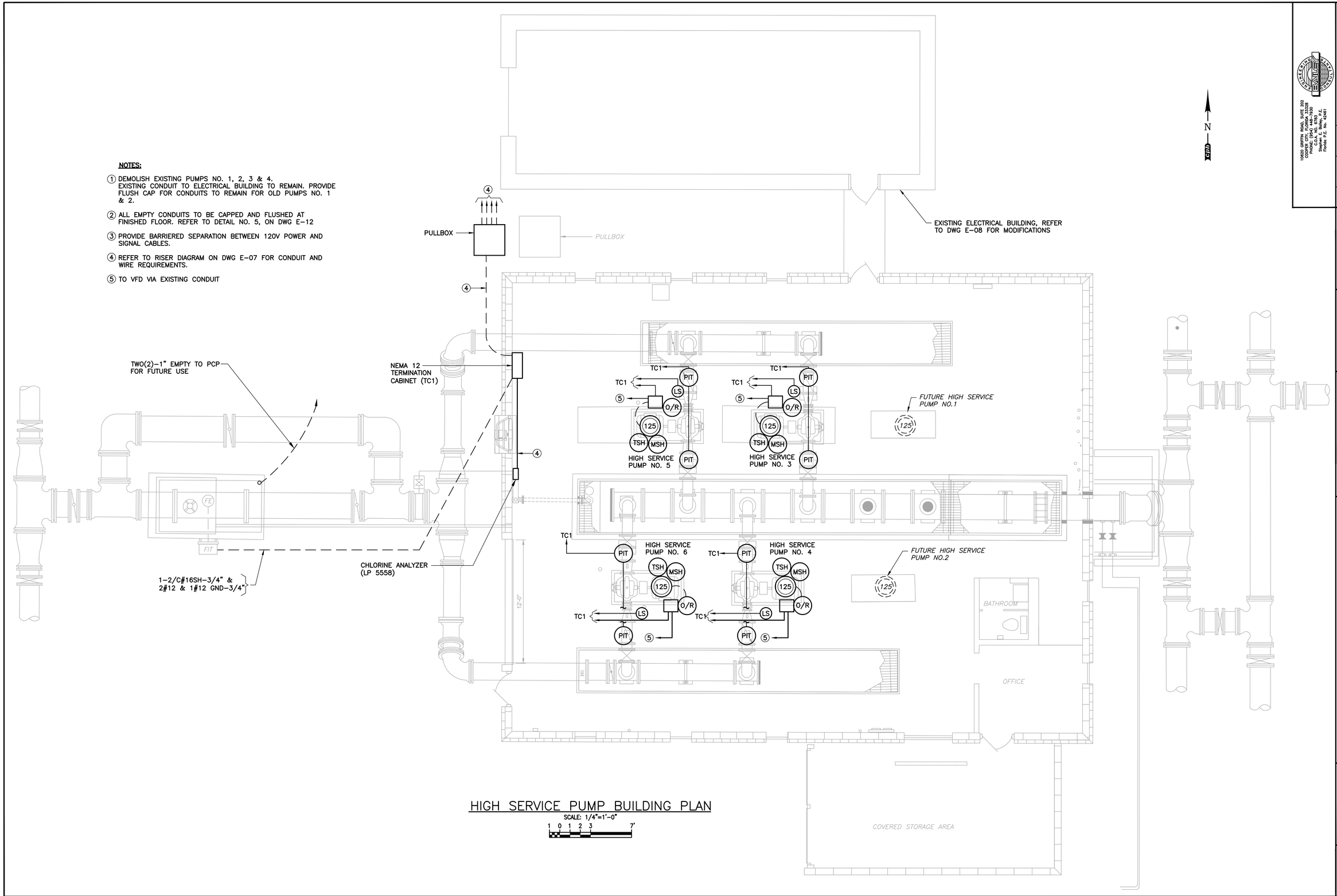

HIGH SERVICE PUMP BUILDING PLAN

SCALE: 1/4"=1'-0"

1 0 1 2 3 7'

10003 GRIFFIN ROAD, SUITE 202
COOPER CITY, FLORIDA 33328
PHONE: (954) 448-7930
CERTIFICATE NO. 8179
Stephen E. Bailey, P.E.
Florida P.E. No. 42461

NO.	BY	DATE	REVISIONS
6.	X	X	
5.	X	X	
4.	X	X	
3.	X	X	
2.	X	X	
1.	X	X	

DESIGN ENGINEER: STEPHEN E. BAILEY
FLORIDA REGISTRATION NO. 42461

DESIGNER: SEB
DRAWN BY: SDV
DATE: FEBRUARY 2017
CHECKED BY:
DATE: FEBRUARY 2017

JEA Building Community℠

ARLINGTON WATER TREATMENT PLANT
HIGH SERVICE PUMP REPLACEMENT
HIGH SERVICE PUMP BUILDING PLAN

NO. SHEETS 26
SHEET NO. 24
DRAWING NO. E-10
PROJ. NO. J6606
DATE: FEBRUARY 2017
SCALE: AS NOTED

X:\Active Projects\CPH\JEA\Arlington WTP HSP Replacement\05_100% Submittal\Dwgs\E-10 HS PUMPS PLAN.dwg, 24 X 36, 2/14/2017 5:12:44 PM, dmartin

PANEL: L2 | **BUS:** 225 AMP | **VOLT:** 120/208V,3ø,4W
LOCATION: ELECTRICAL BUILDING | **MAINS:** 100A,3P MB | **REMARKS:** PROVIDE SPD
MOUNTING: SURFACE | **POLES:** 42 | **A.I.C. SYMM:** 10,000 AIC

AMPS	POLE	WIRE	GND.	COND.	LOAD SERVED	BUS KVA A	BUS KVA B	BUS KVA C	BUS A B C		BUS KVA A	BUS KVA B	BUS KVA C	LOAD SERVED	WIRE	GND.	COND.	POLE	AMPS
20	2	12	12	3/4"	AHU-1	0.50			1	2	0.10			CL2 AIT	12	12	3/4"	1	20
–	–	–	–	–	–		0.50		3	4		0.36		EXT RECEPT	12	12	3/4"	1	20
								–	5	6			–						
						–			7	8	–								
							–		9	10		–							
								–	11	12			–						
						–			13	14	–								
							–		15	16		–							
								–	17	18			–						
						–			19	20	–								
							–		21	22		–							
								–	23	24			–						
						–			25	26	–								
							–		27	28		–							
								–	29	30			–						
						–			31	32	–								
							–		33	34		–							
								–	35	36			–						
						–			37	38	0.10			SPD	6	6	3/4"		40
							–		39	40		0.10							
								–	41	42			0.10						
TOTAL (PHASE):						0.50	0.50	0.00			0.20	0.46	0.10	**NOTES:**					
TOTAL KVA:									1.76					–					
TOTAL AMPS:									4.89										
TOTAL DEMAND AMPS:									4.89										

APT TE/XDS SERIES 200KA/PHASE WITH AUDIBLE ALARM AND FORM C DRY CONTACTS → SPD

PANEL: '1LP1' CUTLER HAMMER | BUS: 225 AMP | VOLT: 120/208-3ϕ-4W
LOCATION: ELECTRICAL ROOM | MAINS: 150A,3P MB | REMARKS: NEMA 1
MOUNTING: SURFACE | POLES: 42 | A.I.C. SYMM: 10,000

AMPS	POLE	WIRE	GND.	COND.	LOAD SERVED	BUS KVA A	BUS KVA B	BUS KVA C	BUS A B C		BUS KVA A	BUS KVA B	BUS KVA C	LOAD SERVED	WIRE	GND.	COND.	POLE	AMPS
20	1	–	–	–	INDOOR LTG ELEC BLDG	1.80			1	2	0.72			OFFICE LTG PUMP BLDG	–	–	–	1	20
20	1	–	–	–	EXT LIGHTING ELEC BLDG		–		3	4		–		INDOOR LTG PUMP BLDG	–	–	–	1	20
20	1				YARD LIGHTING-RES #2			–	5	6			–	EXT LTG PUMP BLDG				1	20
30	1				YARD LIGHTING-RES #1	–			7	8	–			RECEPT PUMP BLDG				1	20
					RECEPT ELEC BLDG		–		9	10		–		RECEPT PUMP BLDG				1	20
20	1				PLC CONTROL PANEL			–	11	12			–	FIRE ALARM PANEL				1	20
20	1				FLOW METER	–			13	14	–			WATER FOUNTAIN				1	20
20	1				FIBER OPTIC CABINET		–		15	16		–		SECURITY PANEL				1	20
20	1				FLOW METER PIT RECEPT			–	17	18			–	EXHAUST FAN PUMP BLDG				2	20
20	1				GEN FUEL TANK	–			19	20	–			TELEPHONE CABINET					
20	1				LVL TRANSMITTER RES #1		–		21	22		–		CHLORINE/PH ANALYZER				2	20
20	1				LVL TRANSMITTER RES #2			–	23	24			–	SPARE TO PUMP BLDG					
20	1				SPACE HEATER MCC1	–			25	26	–			MON. WELL SAMPLE PUMP				3	20
20	2				SPACE HEATER MCC2		–		27	28		–							
20	1				CAMERA EQUIPMENT			–	29	30			–						
20	1				TWIST LOK RECEPT	–			31	32	–			SPACE					
20	1				TWIST LOK RECEPT		–		33	34		–		SPACE					
20	1				MON. WELL DRAW DOWN			–	35	36			–	TEMP PWR					20
20	1				CAM RECEPT	–			37	38	–			SAWCROSS				1	20
20	2				POLE LIGHTS		–		39	40		–		SPACE					
					SPARE				41	42				PORT GEN. BATTERY CHRG.				1	20
TOTAL (PHASE):						–	–	–			–	–	–	NOTES:					
TOTAL KVA:									0.00					* PANEL SCHEDULE SHOWN FOR INFORMATION PURPOSES ONLY					
TOTAL AMPS:									0.00										
TOTAL DEMAND AMPS:									0.00										

JEA Building Community sm
10503 griffin road, suite 202
cooper city, florida 33328
phone: (954) 435-7030
fax: (954) 435-7031
stephen e. bailey, p.e.
florida p.e. no. 42461

NO.	BY	DATE	REVISIONS
6.	X	X	
5.	X	X	
4.	X	X	
3.	X	X	
2.	X	X	
1.	X	X	

DESIGN ENGINEER: STEPHEN E. BAILEY
FLORIDA REGISTRATION NO. 42461

DESIGNER: SEB
DRAWN BY: SDV
DATE: FEBRUARY 2017
CHECKED BY:
DATE: FEBRUARY 2017

ARLINGTON WATER TREATMENT PLANT
HIGH SERVICE PUMP REPLACEMENT
FIXTURE SCHEDULE & LIGHTING DETAILS

PROJ. NO. J6606
DATE: FEBRUARY 2017
SCALE: AS NOTED

NO. SHEETS 26
SHEET NO. 25
DRAWING NO. E-11

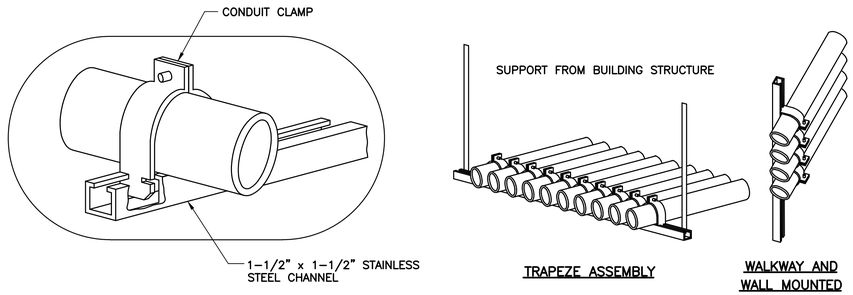

1 TYP — CONDUIT PIPE STRAP MOUNTING DETAILS

N.T.S.

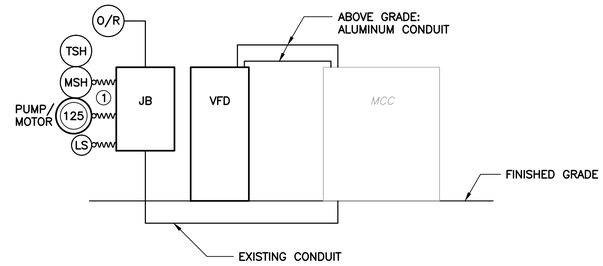

NOTES:

1. VFD CABLE TO MOTOR.

2 TYP — VFD CONDUIT DETAIL

N.T.S.

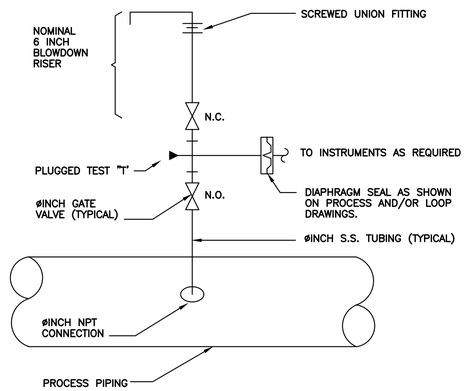

NOTES:

1. HORIZONTAL INSTALLATION SHOWN, VERTICAL INSTALLATION SIMILAR.
2. PROVIDE SUPPORT AS REQUIRED FOR A RIGID INSTALLATION
3. TAP CONNECTION FOR FLUID PIPING SHALL BE ON THE SIDE. TAP CONNECTION FOR AIR PIPING SHALL BE ON THE TOP.

6 TYP — TYPICAL PRESSURE TAP CONNECTION INSTALLATION

N.T.S.

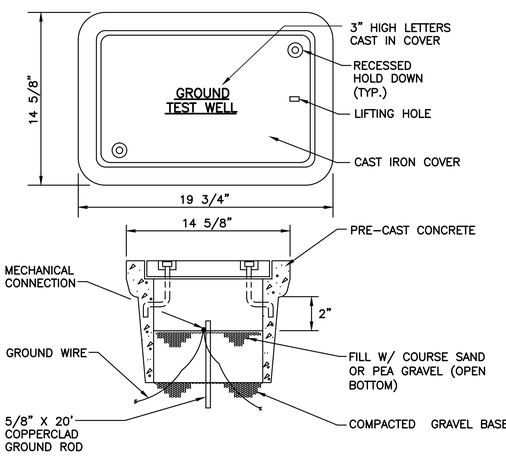

3 TYP — GROUND TEST WELL

N.T.S.

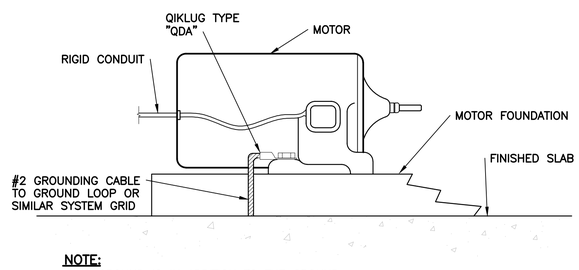

NOTE:

THIS GROUND IS IN ADDITION TO THE GROUND FROM THE MAIN ELECTRICAL SERVICE.

4 TYP — EQUIPMENT GROUNDING DETAIL

NTS

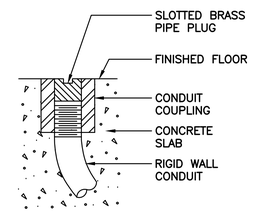

5 TYP — DETAIL OF CONDUIT TERMINATION STUB OUT

N.T.S.

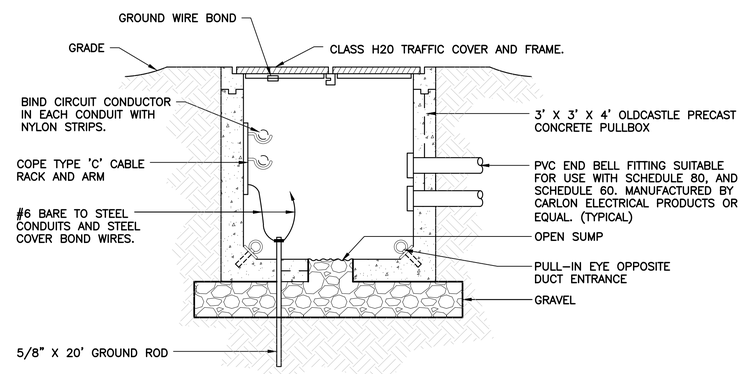

NOTES:

1. ALL WIRES IN PULL BOX TO BE LABELED INDICATING CIRCUIT NUMBERS. SEE SPECIFICATIONS.
2. DO NOT SPLICE CABLES IN PULL BOXES UNLESS OTHERWISE NOTED.
3. PATCH CONDUIT ENTRY WINDOW WITH CONCRETE.

7 TYP — PULL BOX DETAIL

N.T.S.

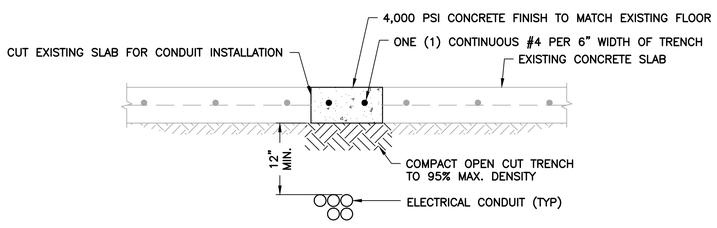

8 TYP — CONDUIT INSTALLATION DETAIL

SCALE: N.T.S.

JEA
10503 GRIFFIN ROAD, SUITE 202
COOPER CITY, FLORIDA 33328
PHONE: (954) 435-7030
FAX: (954) 435-7031
Stephen E. Bailey, P.E.
Florida P.E. No. 42461

NO.	BY	DATE	REVISIONS
6.	X	X	
5.	X	X	
4.	X	X	
3.	X	X	
2.	X	X	
1.	X	X	

DESIGN ENGINEER: STEPHEN E. BAILEY
FLORIDA REGISTRATION NO. 42461

DESIGNER: SEB
DRAWN BY: SDV
DATE: FEBRUARY 2017
CHECKED BY:
DATE: FEBRUARY 2017

JEA Building Community sm

ARLINGTON WATER TREATMENT PLANT
HIGH SERVICE PUMP REPLACEMENT
ELECTRICAL DETAILS

PROJ. NO. J6606
DATE: FEBRUARY 2017
SCALE: AS NOTED

NO. SHEETS 26
SHEET NO. 26
DRAWING NO. E-12

X:\Active Projects\CPM\JEA\Arlington WTP HSP Replacement\05_100% Submittal\Dwgs\E-12 DETAILS.dwg, 24 X 36, 2/14/2017 5:13:01 PM, dmartin