SECTION 07840
FIRE-RESISTIVE JOINT SYSTEMS

PART 1 GENERAL

1.01 SCOPE OF WORK

A. Furnish all labor, materials, equipment and incidentals required and install fire-resistive joint systems complete as shown on the Drawings and as specified herein.

B. Work Includes the following:

1. Joints in or between fire-resistance-rated constructions.

1.02 RELATED WORK

A. Penetrations in fire-resistance-rated walls, horizontal assemblies, and smoke barriers are included in Section 07841.

1.03 SUBMITTALS

A. Product Data: For each type of product.

B. Product Schedule: For each fire-resistive joint system. Include location and design designation of qualified testing agency.

1. Where Project conditions require modification to a qualified testing agency's illustration for a particular fire-resistive joint system condition, submit illustration, with modifications marked, approved by fire-resistive joint system manufacturer's fire-protection engineer as an engineering judgment or equivalent fire-resistance-rated assembly.

C. Qualification Data: For qualified Installer.

D. Installer Certificates: From Installer indicating fire-resistive joint systems have been installed in compliance with requirements and manufacturer's written recommendations.

E. Product Test Reports: Based on evaluation of comprehensive tests performed by a qualified testing agency, for fire-resistive joint systems.

1.04 REFERENCES

A. ASTM International

1. ASTM E 84 - Test Method for Surface Burning Characteristics of Building Materials

2. ASTM E 119 - Test Methods for Fire Tests of Building Construction and Materials

3. ASTM E 1966 - Test Method for Fire-Resistive Joint Systems

4. ASTM E 2307 - Test Method for Determining Fire Resistance of Perimeter Fire Barrier Systems Using Intermediate-Scale, Multi-Story Test Apparatus

B. Code of Federal Regulations

1. 40 CFR 59, Subpart D - National Volatile Organic Compound Emission Standards for Architectural Coatings

C. FM Global

1. FM Global 4991 - Approval of Firestop Contractors (FCIA)

D. Intertek ETL SEMCO

1. Directory of Listed Building Products.

E. Underwriters Laboratories Inc.

1. UL 2079 - Tests for Fire Resistance of Building Joint Systems (ANSI)

2. Fire Resistance Directory.

3. Qualified Firestop Contractor Program Requirements.

F. Where reference is made to one of the above or other referenced standards, the revisions in effect at the time of bid opening shall apply.

1.05 QUALITY ASSURANCE

A. Installer Qualifications: A firm that has been approved by FM Global according to FM Global 4991, "Approval of Firestop Contractors," or been evaluated by UL and found to comply with UL's "Qualified Firestop Contractor Program Requirements."

B. Fire-Test-Response Characteristics: Fire-resistive joint systems shall comply with the following requirements:

1. Fire-resistive joint system tests are performed by a qualified testing agency acceptable to authorities having jurisdiction.

2. Fire-resistive joint systems are identical to those tested per testing standard referenced in "Fire-Resistive Joint Systems" Article. Provide rated systems complying with the following requirements:
   a. Fire-resistive joint system products bear classification marking of qualified testing agency.
   b. Fire-resistive joint systems correspond to those indicated by reference to designations listed by the following:
      1) UL in its "Fire Resistance Directory."
      2) Intertek ETL SEMKO in its "Directory of Listed Building Products."

1.06 PROJECT CONDITIONS

A. Environmental Limitations: Do not install fire-resistive joint systems when ambient or substrate temperatures are outside limits permitted by fire-resistive joint system manufacturers or when substrates are wet due to rain, frost, condensation, or other causes.

B. Install and cure fire-resistive joint systems per manufacturer's written instructions using natural means of ventilation or, where this is inadequate, forced-air circulation.

1.07 COORDINATION

A. Coordinate construction of joints to ensure that fire-resistive joint systems are installed according to specified requirements.

B. Coordinate sizing of joints to accommodate fire-resistive joint systems.

PART 2 PRODUCTS

2.01 FIRE-RESISTIVE JOINT SYSTEMS

A. Where required, provide fire-resistive joint systems that are produced and installed to resist spread of fire according to requirements indicated, resist passage of smoke and other gases, and maintain original fire-resistance rating of assemblies in or between which fire-resistive joint systems are installed. Fire-resistive joint systems shall accommodate building movements without impairing their ability to resist the passage of fire and hot gases.

B. Joints in or between Fire-Resistance-Rated Construction: Provide fire-resistive joint systems with ratings determined per ASTM E 1966 or UL 2079:

1. Joints include those installed in or between fire-resistance-rated walls, floor or floor/ceiling assemblies and roofs or roof/ceiling assemblies.

2. Fire-Resistance Rating: Equal to or exceeding the fire-resistance rating of construction they will join.

3. Manufacturers: Subject to compliance with requirements, provide products by one of the following:
   a. Johns Manville.
   b. 3M Fire Protection Products.
   c. Tremco, Inc.; Tremco Fire Protection Systems Group.
   d. USG Corporation.
   e. Or equal.

C. Exposed Fire-Resistive Joint Systems: Provide products with flame-spread and smoke-developed indexes of less than 25 and 450, respectively, as determined per ASTM E 84.

D. Accessories: Provide components of fire-resistive joint systems, including primers and forming materials that are needed to install fill materials and to maintain ratings required. Use only components specified by fire-resistive joint system manufacturer and approved by the qualified testing agency for systems indicated.

PART 3 EXECUTION

3.01 EXAMINATION

A. Examine substrates and conditions, with Installer present, for compliance with requirements for joint configurations, substrates, and other conditions affecting performance of the Work.

B. Proceed with installation only after unsatisfactory conditions have been corrected.

3.02 PREPARATION

A. Surface Cleaning: Clean joints immediately before installing fire-resistive joint systems to comply with fire-resistive joint system manufacturer's written instructions and the following requirements:

1. Remove from surfaces of joint substrates foreign materials that could interfere with adhesion of fill materials.

2. Clean joint substrates to produce clean, sound surfaces capable of developing optimum bond with fill materials. Remove loose particles remaining from cleaning operation.

3. Remove laitance and form-release agents from concrete.

B. Priming: Prime substrates where recommended in writing by fire-resistive joint system manufacturer using that manufacturer's recommended products and methods. Confine primers to areas of bond; do not allow spillage and migration onto exposed surfaces.

C. Masking Tape: Use masking tape to prevent fill materials of fire-resistive joint system from contacting adjoining surfaces that will remain exposed on completion of the Work and that would otherwise be permanently stained or damaged by such contact or by cleaning methods used to remove stains. Remove tape as soon as possible without disturbing fire-resistive joint system's seal with substrates.

3.03 INSTALLATION

A. General: Install fire-resistive joint systems to comply with manufacturer's written installation instructions and published drawings for products and applications indicated.

B. Install forming materials and other accessories of types required to support fill materials during their application and in position needed to produce cross-sectional shapes and depths required to achieve fire ratings indicated.

1. After installing fill materials and allowing them to fully cure, remove combustible forming materials and other accessories not indicated as permanent components of fire-resistive joint system.

C. Install fill materials for fire-resistive joint systems by proven techniques to produce the following results:

1. Fill voids and cavities formed by joints and forming materials as required to achieve fire-resistance ratings indicated.

2. Apply fill materials so they contact and adhere to substrates formed by joints.

3. For fill materials that will remain exposed after completing the Work, finish to produce smooth, uniform surfaces that are flush with adjoining finishes.

3.04 IDENTIFICATION

A. Identify fire-resistive joint systems with preprinted metal or plastic labels. Attach labels permanently to surfaces adjacent to and within 6 inches of joint edge so labels will be visible to

anyone seeking to remove or penetrate joint system. Use mechanical fasteners or self-adhering-type labels with adhesives capable of permanently bonding labels to surfaces on which labels are placed. Include the following information on labels:

1. The words "Warning - Fire-Resistive Joint System - Do Not Disturb. Notify Building Management of Any Damage."

2. Construction Contractor's name, address, and phone number.

3. Designation of applicable testing agency.

4. Date of installation.

5. Manufacturer's name.

6. Installer's name.

3.05 CLEANING AND PROTECTING

A. Clean off excess fill materials adjacent to joints as the Work progresses by methods and with cleaning materials that are approved in writing by fire-resistive joint system manufacturers and that do not damage materials in which joints occur.

B. Provide final protection and maintain conditions during and after installation that ensure fire-resistive joint systems are without damage or deterioration at time of Substantial Completion. If damage or deterioration occurs despite such protection, cut out and remove damaged or deteriorated fire-resistive joint systems immediately and install new materials to produce fire-resistive joint systems complying with specified requirements.

3.06 FIRE-RESISTIVE JOINT SYSTEM SCHEDULE

A. Where UL-classified systems are indicated, they refer to system numbers in UL's "Fire Resistance Directory" under product Category XHBN.

B. Wall-to-Wall, Fire-Resistive Joint Systems:

1. UL-Classified Systems: WW-D-0074.

2. Assembly Rating: 2 hours.

3. Nominal Joint Width: As indicated.

4. Movement Capabilities: Class I.

C. Head-of-Wall, Fire-Resistive Joint Systems:

1. UL-Classified Systems: HW-D-0489.

2. Assembly Rating: 2 hours.

3. Nominal Joint Width: As indicated.

4. Movement Capabilities: Class I.

D. Bottom-of-Wall, Fire-Resistive Joint Systems:

1. UL-Classified Systems: BW-S-0007.

2. Assembly Rating: 2 hours.

3. Nominal Joint Width: As indicated.

4. Movement Capabilities: Class I.

END OF SECTION

SECTION 07841
PENETRATION FIRESTOPPING

PART 1 GENERAL

1.01 SCOPE OF WORK

A. Furnish all labor, materials, equipment and incidentals required and design and deliver penetration firestopping for the Project as shown on the Drawings and as specified herein.

B. The work includes:

1. Penetrations in fire-resistance-rated walls.

1.02 RELATED WORK

A. Concrete is included in Division 3.

B. Finishes are included in Division 9.

1.03 SUBMITTALS

A. Submit, in accordance with Section 01300, the following:

B. Product Data: For each type of product indicated.

C. Product Schedule: For each penetration firestopping system. Include location and design designation of qualified testing and inspecting agency.

1. Where Project conditions require modification to a qualified testing and inspecting agency's illustration for a particular penetration firestopping condition, submit illustration, with modifications marked, approved by penetration firestopping manufacturer's fire-protection engineer as an engineering judgment or equivalent fire-resistance-rated assembly.

D. Qualification Data: For qualified Installer.

E. Installer Certificates: From Installer indicating penetration firestopping has been installed in compliance with requirements and manufacturer's written recommendations.

F. Product Test Reports: Based on evaluation of comprehensive tests performed by a qualified testing agency, for penetration firestopping.

1.04 REFERENCE STANDARDS

A. ASTM International

1. ASTM E 84 - Test Method for Surface Burning Characteristics of Building Materials.

2. ASTM E 814 - Test Method for Fire Tests of Through-Penetration Fire Stops.

B. Code of Federal Regulations

1. 40 CFR 59, Subpart D - National Volatile Organic Compound Emission Standards for Architectural Coatings.

C. FM Global

1. FM Global 4991 - Approval of Firestop Contractors (FCIA).

2. Building Materials Approval Guide.

D. Intertek ETL SEMCO

1. Directory of Listed Building Products.

E. Underwriters Laboratories Inc.

1. UL 1479 - Fire Tests of Through-Penetration Firestops (ANSI)

2. Fire Resistance Directory.

3. Qualified Firestop Contractor Program Requirements.

F. Where reference is made to one of the above or other referenced standards, the revisions in effect at the time of bid opening shall apply.

1.05 QUALITY ASSURANCE

A. Installer Qualifications: A firm that has been approved by FM Global according to FM Global 4991, "Approval of Firestop Contractors," or been evaluated by UL and found to comply with its "Qualified Firestop Contractor Program Requirements."

B. Installer Qualifications: A firm experienced in installing penetration firestopping similar in material, design, and extent to that indicated for this Project, whose work has resulted in construction with a record of successful performance. Qualifications include having the necessary experience, staff, and training to install manufacturer's products per specified requirements. Manufacturer's willingness to sell its penetration firestopping products to Construction Contractor or to Installer engaged by Construction Contractor does not in itself confer qualification on buyer.

C. Fire-Test-Response Characteristics: Penetration firestopping shall comply with the following requirements:

1. Penetration firestopping tests are performed by a qualified testing agency acceptable to authorities having jurisdiction.

2. Penetration firestopping is identical to those tested per testing standard referenced in "Penetration Firestopping" Article. Provide rated systems complying with the following requirements:
   a. Penetration firestopping products bear classification marking of qualified testing and inspecting agency.

b. Classification markings on penetration firestopping correspond to designations listed by the following:
   1) UL in its "Fire Resistance Directory."
   2) Intertek ETL SEMKO in its "Directory of Listed Building Products."
   3) FM Global in its "Building Materials Approval Guide."

1.06 PROJECT CONDITIONS

A. Environmental Limitations: Do not install penetration firestopping when ambient or substrate temperatures are outside limits permitted by penetration firestopping manufacturers or when substrates are wet because of rain, frost, condensation, or other causes.

B. Install and cure penetration firestopping per manufacturer's written instructions using natural means of ventilations or, where this is inadequate, forced-air circulation.

1.07 COORDINATION

A. Coordinate construction of openings and penetrating items to ensure that penetration firestopping is installed according to specified requirements.

B. Coordinate sizing of sleeves, openings, core-drilled holes, or cut openings to accommodate penetration firestopping.

PART 2 PRODUCTS

2.01 MANUFACTURERS

A. Manufacturers: Provide products by one of the following:

1. Johns Manville.

2. 3M Fire Protection Products.

3. Tremco, Inc.; Tremco Fire Protection Systems Group.

4. USG Corporation.

5. Or equal.

2.02 PENETRATION FIRESTOPPING

A. Provide penetration firestopping that is produced and installed to resist spread of fire according to requirements indicated, resist passage of smoke and other gases, and maintain original fire-resistance rating of construction penetrated. Penetration firestopping systems shall be compatible with one another, with the substrates forming openings, and with penetrating items if any.

B. Penetrations in Fire-Resistance-Rated Walls: Provide penetration firestopping with ratings determined per ASTM E 814 or UL 1479, based on testing at a positive pressure differential of 0.01-inch wg.

1. Fire-resistance-rated walls include fire partitions.

2. F-Rating: Not less than the fire-resistance rating of constructions penetrated.

C. Penetrations in Smoke Barriers: Provide penetration firestopping with ratings determined per UL 1479.

1. L-Rating: Not exceeding 5.0 cfm/sq. ft. of penetration opening at 0.30-inch wg at both ambient and elevated temperatures.

D. W-Rating: Provide penetration firestopping showing no evidence of water leakage when tested according to UL 1479.

E. Exposed Penetration Firestopping: Provide products with flame-spread and smoke-developed indexes of less than 25 and 450, respectively, as determined per ASTM E 84.

F. Accessories: Provide components for each penetration firestopping system that are needed to install fill materials and to maintain ratings required. Use only those components specified by penetration firestopping manufacturer and approved by qualified testing and inspecting agency for firestopping indicated.

1. Permanent forming/damming/backing materials, including the following:
   a. Slag-wool-fiber or rock-wool-fiber insulation.
   b. Sealants used in combination with other forming/damming/backing materials to prevent leakage of fill materials in liquid state.
   c. Fire-rated form board.
   d. Fillers for sealants.

2. Temporary forming materials.

3. Substrate primers.

4. Collars.

5. Steel sleeves.

2.03 FILL MATERIALS

A. Cast-in-Place Firestop Devices: Factory-assembled devices for use in cast-in-place concrete floors and consisting of an outer metallic sleeve lined with an intumescent strip, a radial extended flange attached to one end of the sleeve for fastening to concrete formwork, and a neoprene gasket.

B. Latex Sealants: Single-component latex formulations that do not re-emulsify after cure during exposure to moisture.

C. Firestop Devices: Factory-assembled collars formed from galvanized steel and lined with intumescent material sized to fit specific diameter of penetrant.

D. Intumescent Composite Sheets: Rigid panels consisting of aluminum-foil-faced elastomeric sheet bonded to galvanized-steel sheet.

E. Intumescent Putties: Non-hardening dielectric, water-resistant putties containing no solvents, inorganic fibers, or silicone compounds.

F. Intumescent Wrap Strips: Single-component intumescent elastomeric sheets with aluminum foil on one side.

G. Mortars: Prepackaged dry mixes consisting of a blend of inorganic binders, hydraulic cement, fillers, and lightweight aggregate formulated for mixing with water at Project site to form a non-shrinking, homogeneous mortar.

H. Pillows/Bags: Reusable heat-expanding pillows/bags consisting of glass-fiber cloth cases filled with a combination of mineral-fiber, water-insoluble expansion agents, and fire-retardant additives. Where exposed, cover openings with steel-reinforcing wire mesh to protect pillows/bags from being easily removed.

I. Silicone Foams: Multicomponent, silicone-based liquid elastomers that, when mixed, expand and cure in place to produce a flexible, non-shrinking foam.

J. Silicone Sealants: Single-component, silicone-based, neutral-curing elastomeric sealants of grade indicated below:

1. Grade: Pourable (self-leveling) formulation for openings in floors and other horizontal surfaces, and non-sag formulation for openings in vertical and sloped surfaces, unless indicated firestopping limits use of non-sag grade for both opening conditions.

2.04 MIXING

A. For those products requiring mixing before application, comply with penetration firestopping manufacturer's written instructions for accurate proportioning of materials, water (if required), type of mixing equipment, selection of mixer speeds, mixing containers, mixing time, and other items or procedures needed to produce products of uniform quality with optimum performance characteristics for application indicated.

PART 3 EXECUTION

3.01 EXAMINATION

A. Examine substrates and conditions, with Installer present, for compliance with requirements for opening configurations, penetrating items, substrates, and other conditions affecting performance of the Work.

B. Proceed with installation only after unsatisfactory conditions have been corrected.

3.02 PREPARATION

A. Surface Cleaning: Clean out openings immediately before installing penetration firestopping to comply with manufacturer's written instructions and with the following requirements:

1. Remove from surfaces of opening substrates and from penetrating items foreign materials that could interfere with adhesion of penetration firestopping.

2. Clean opening substrates and penetrating items to produce clean, sound surfaces capable of developing optimum bond with penetration firestopping. Remove loose particles remaining from cleaning operation.

3. Remove laitance and form-release agents from concrete.

B. Priming: Prime substrates where recommended in writing by manufacturer using that manufacturer's recommended products and methods. Confine primers to areas of bond; do not allow spillage and migration onto exposed surfaces.

C. Masking Tape: Use masking tape to prevent penetration firestopping from contacting adjoining surfaces that will remain exposed on completion of the Work and that would otherwise be permanently stained or damaged by such contact or by cleaning methods used to remove stains. Remove tape as soon as possible without disturbing firestopping's seal with substrates.

3.03 INSTALLATION

A. General: Install penetration firestopping to comply with manufacturer's written installation instructions and published drawings for products and applications indicated.

B. Install forming materials and other accessories of types required to support fill materials during their application and in the position needed to produce cross-sectional shapes and depths required to achieve fire ratings indicated.

1. After installing fill materials and allowing them to fully cure, remove combustible forming materials and other accessories not indicated as permanent components of firestopping.

C. Install fill materials for firestopping by proven techniques to produce the following results:

1. Fill voids and cavities formed by openings, forming materials, accessories, and penetrating items as required to achieve fire-resistance ratings indicated.

2. Apply materials so they contact and adhere to substrates formed by openings and penetrating items.

3. For fill materials that will remain exposed after completing the Work, finish to produce smooth, uniform surfaces that are flush with adjoining finishes.

3.04 IDENTIFICATION

A. Identify penetration firestopping with preprinted metal or plastic labels. Attach labels permanently to surfaces adjacent to and within 6 inches of firestopping edge so labels will be visible to anyone seeking to remove penetrating items or firestopping. Use mechanical fasteners or self-adhering-type labels with adhesives capable of permanently bonding labels to surfaces on which labels are placed. Include the following information on labels:

1. The words "Warning - Penetration Firestopping - Do Not Disturb. Notify Building Management of Any Damage."

2. Construction Contractor's name, address, and phone number.

3. Designation of applicable testing and inspecting agency.

4. Date of installation.

5. Manufacturer's name.

6. Installer's name.

3.05 CLEANING AND PROTECTION

A. Clean off excess fill materials adjacent to openings as the Work progresses by methods and with cleaning materials that are approved in writing by penetration firestopping manufacturers and that do not damage materials in which openings occur.

B. Provide final protection and maintain conditions during and after installation that ensure that penetration firestopping is without damage or deterioration at time of Substantial Completion. If, despite such protection, damage or deterioration occurs, immediately cut out and remove damaged or deteriorated penetration firestopping and install new materials to produce systems complying with specified requirements.

3.06 PENETRATION FIRESTOPPING SCHEDULE

A. Where UL-classified systems are indicated, they refer to system numbers in UL's "Fire Resistance Directory" under product Category XHEZ.

B. Where FM Global-approved systems are indicated, they refer to design numbers listed in FM Global's "Building Materials Approval Guide" under "Wall and Floor Penetration Fire Stops."

C. Firestopping for Metallic Pipes, Conduit, or Tubing:

1. UL-Classified Systems: W-L-1302.

2. F-Rating: 2 hours.

3. T-Rating: 1/2 hours.

4. W-Rating: No leakage of water at completion of water leakage testing.

5. Type of Fill Materials: As required to achieve rating.

D. Firestopping for Nonmetallic Pipe, Conduit, or Tubing:

1. UL-Classified Systems: W-L-2129.

2. F-Rating: 2 hours.

3. T-Rating: 2 hours.

4. W-Rating: No leakage of water at completion of water leakage testing.

5. Type of Fill Materials: As required to achieve rating.

E. Firestopping for Electrical Cables:

1. UL-Classified Systems: W-L-3131.

2. F-Rating: 2 hours.

3. T-Rating: 1/2 hours.

4. W-Rating: No leakage of water at completion of water leakage testing.

5. Type of Fill Materials: As required to achieve rating.

F. Firestopping for Cable Trays with Electric Cables:

1. UL-Classified Systems: W-L-4056.

2. F-Rating: 2 hours.

3. T-Rating: 1/2 hours.

4. W-Rating: No leakage of water at completion of water leakage testing.

5. Type of Fill Materials: As required to achieve rating.

END OF SECTION

R. ALEMAN & Associates, Inc.
CONSULTING ENGINEERS
6159 Lake Gray Blvd., Suite 101, Jacksonville, FL 32244

VACUUM TEST HOLE REPORT

Test Hole No.: 5
FRA Job No.: 2258

PROJECT NAME: Argyle & Rampart-Pump Station Sites	Subcontract No.: WORK ORDER No.: 15
LOCATE REQUESTED BY: R.E. Holland & Assoc.	PAVEMENT TYPE: (ASPHALT) CONCRETE ASPHALT OVER CONCRETE GRAVEL BRICKS SIDEWALK N/A
REQUESTED LOCATE: GAS STORM SAN. COMMUNICATION (FORCE MAIN) CATV WATER TEL. ELECTRIC RAW WATER UNKNOWN RECLAIMED WATER N/A FIBER OPTIC CABLE	PAVEMENT CONDITION: (GOOD) FAIR POOR N/A
LOCATED UTILITY: GAS STORM SAN. COMMUNICATION (FORCE MAIN) CATV WATER TEL. ELECTRIC RAW WATER UNKNOWN RECLAIMED WATER N/A FIBER OPTIC CABLE	SOIL CONDITIONS: (HARD) (SOFT) WET (MOIST) (DRY) (SAND) (CLAY) ROCK (DIRT) SOLID-ROCK
MATERIAL AS FOUND: D/I C/I STEEL WRAP-STEEL TILE PLASTIC TERRA COTTA ACP RCP CMP (PVC) UNK DB CABLE SMOOTH POUR ROUGH POUR OTHER	SHEET No.: C-3 PROPOSED: New Utilities Roadway Mast Arm/Signal Pole Drainage
SIZE AS FOUND: 20" SIZE EXPECTED: 20"	FORM BY: C.Reyes ASSISTED BY: D.S
UTILTIY CONDITION: (GOOD) FAIR POOR N/A	NUMBER OF HOLES: 1 Date: 5-20-16 TIME:
RIBBON INSTALLED: BLUE YELLOW RED (GREEN) N/A ORANGE WHITE PINK PURPLE	INSTALLED: (PK) HUB STEEL PIN CHIS "X" CHIS BOX
	AT: (GROWN) EDGE OF UTILITY:
	SURVEY PIN LOCATED BY: N/A
	JOB MEASUREMENT TYPE: TENTHS METRIC INCHES
	NOTES: Excavated to a depth of 3.60'

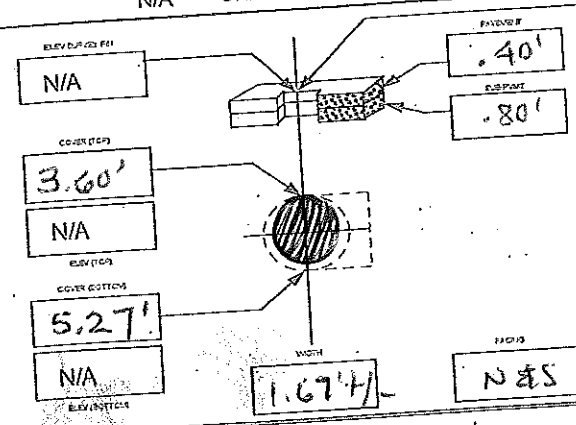

SURVEY INFORMATION
GIVEN ELEVATION
STATION (±) N/A OFFSET: 18.10' LT / (RT)

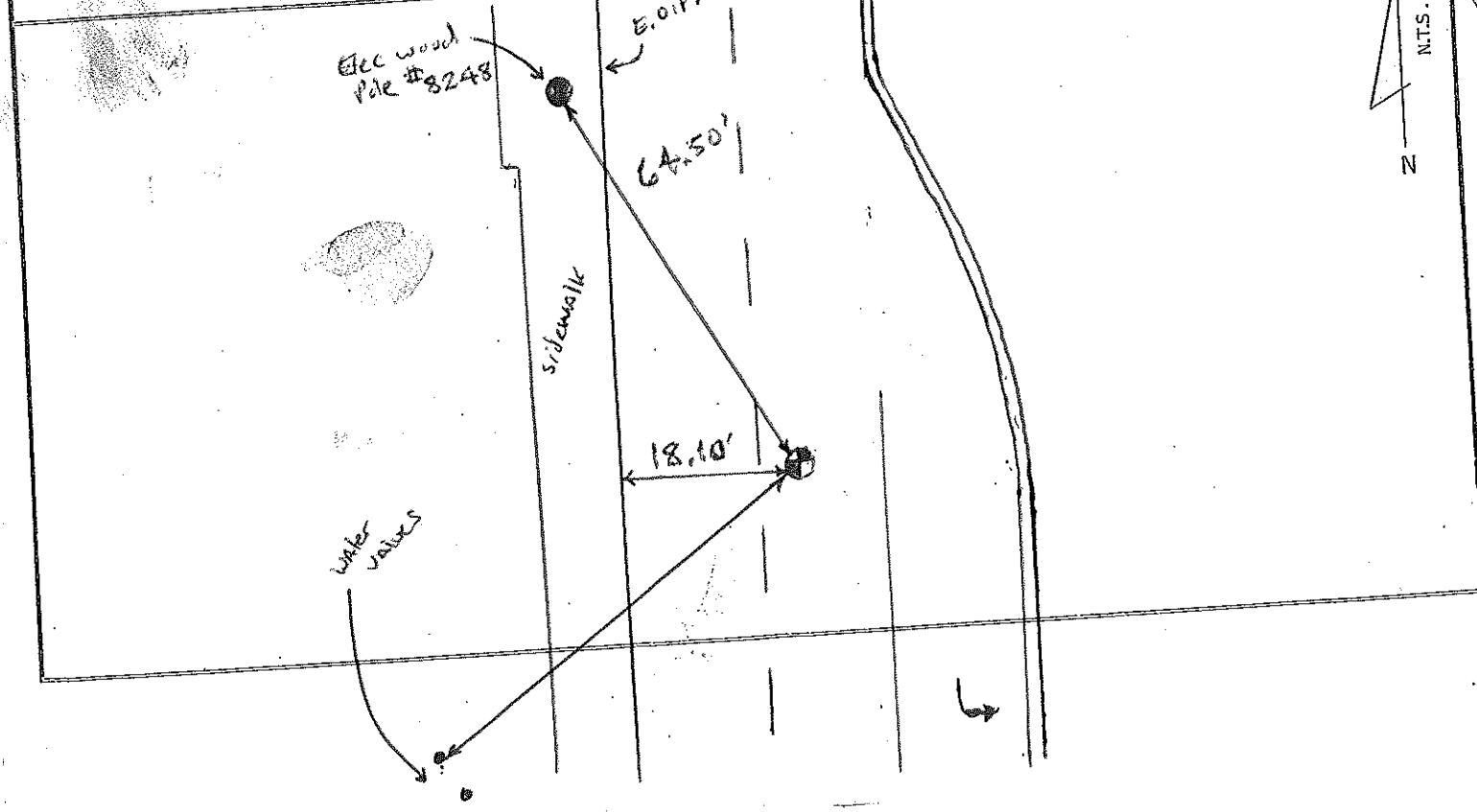

• Found a 20" PVC FM (JEA water & sewer)

R. ALEMAN & Associates, Inc.
CONSULTING ENGINEERS
6155 Lake Gray Blvd., Suite 101, Jacksonville, FL 32244

VACUUM TEST HOLE REPORT

Test Hole No.: 6
FRA Job No.: 2258

PROJECT NAME: Argyle & Rampart-Pump Station Sites
Subcontract No.: WORK ORDER No.: 15

LOCATE REQUESTED BY: R.E. Holland & Assoc.

REQUESTED LOCATE: GAS STORM SAN. COMMUNICATION FORCE MAIN CATV WATER TEL. ELECTRIC RAW WATER UNKNOWN RECLAIMED WATER N/A FIBER OPTIC CABLE

LOCATED UTILITY: GAS STORM SAN. COMMUNICATION FORCE MAIN CATV WATER TEL. ELECTRIC RAW WATER UNKNOWN RECLAIMED WATER N/A FIBER OPTIC CABLE

MATERIAL AS FOUND: D/I C/I STEEL WRAP-STEEL TILE PLASTIC TERRA COTTA ACP RCP CMP PVC UNK DB CABLE SMOOTH POUR ROUGH POUR OTHER

SIZE AS FOUND: 20" SIZE EXPECTED: 20"

UTILTIY CONDITION: GOOD FAIR POOR N/A

RIBBON INSTALLED: BLUE YELLOW RED GREEN N/A ORANGE WHITE PINK PURPLE

PAVEMENT TYPE: ASPHALT CONCRETE ASPHALT OVER CONCRETE GRAVEL BRICKS SIDEWALK N/A

PAVEMENT CONDITION: GOOD FAIR POOR N/A

SOIL CONDITIONS: HARD SOFT WET MOIST DRY SAND CLAY ROCK DIRT SOLID-ROCK

SHEET No.: C-3
PROPOSED: New Utilities Roadway Mast Arm/Signal Pole Drainage

FORM BY: C.Reyes ASSISTED BY: D.S.

NUMBER OF HOLES: 1 Date: 5-20-16 TIME:

INSTALLED: PK HUB STEEL PIN CHIS "X" CHIS BOX

AT: CROWN EDGE OF UTILITY:

SURVEY PIN LOCATED BY: N/A

JOB MEASUREMENT TYPE: TENTHS METRIC INCHES

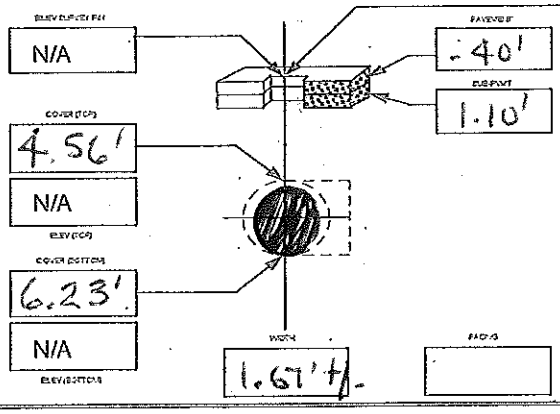

NOTES: Excavated to a depth of 4.56'

· Found a 20" PVC FM.
(JEA water & Sewer)

SURVEY INFORMATION
GIVEN ELEVATION
STATION (±) N/A OFFSET: 18.60' LT / RT

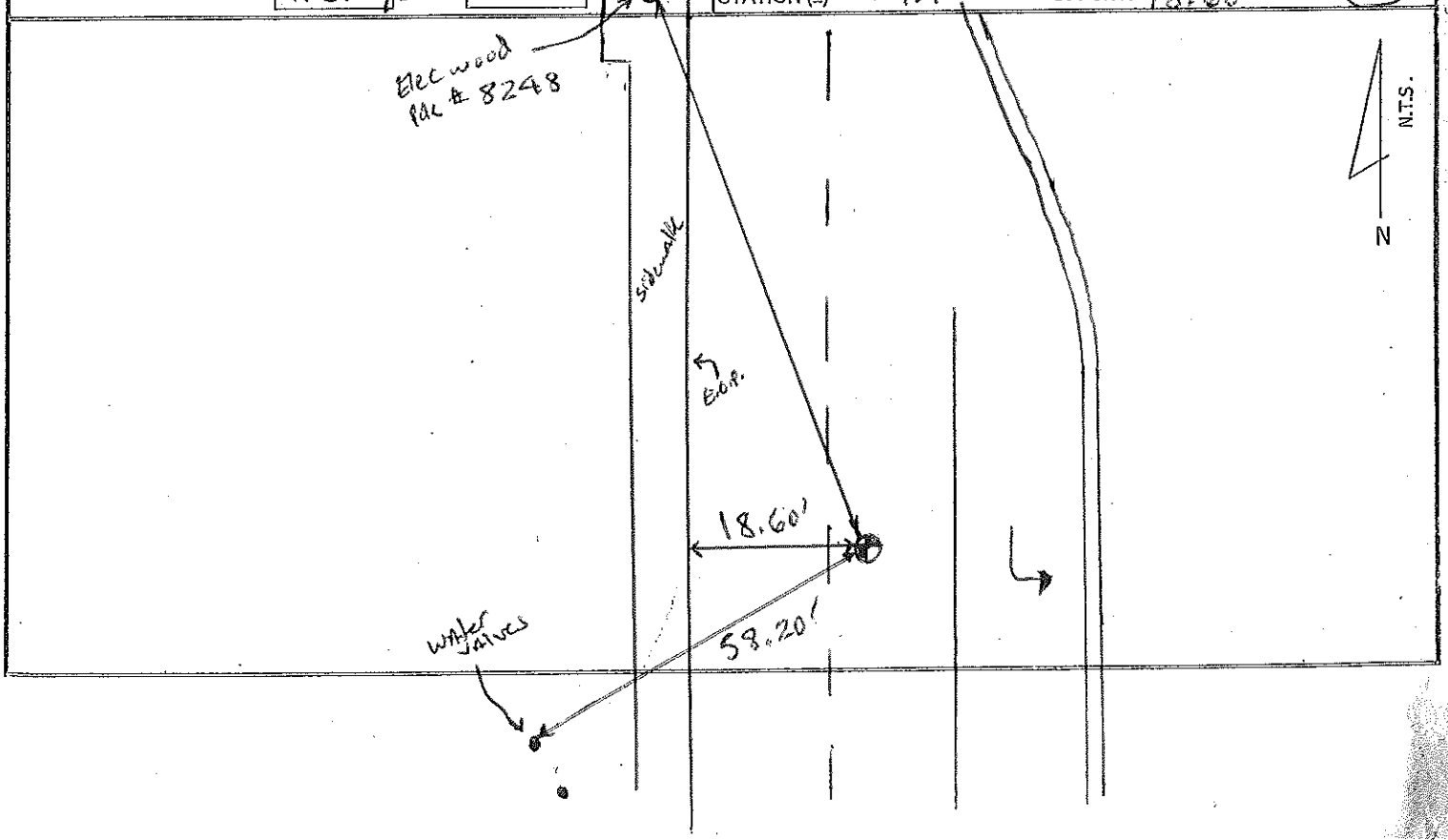

R. ALEMAN & Associates, Inc.
CONSULTING ENGINEERS
6195 Lake Gray Blvd., Suite 101, Jacksonville, FL 32244

VACUUM TEST HOLE REPORT

Test Hole No.: 1
FRA Job No.: 2258

PROJECT NAME: Argyle & Rampart-Pump Station Sites
Subcontract No.: WORK ORDER No.: 15

LOCATE REQUESTED BY: R.E. Holland & Assoc.

REQUESTED LOCATE: GAS STORM SAN. COMMUNICATION FORCE MAIN CATV WATER TEL. ELECTRIC RAW WATER UNKNOWN RECLAIMED WATER N/A FIBER OPTIC CABLE

LOCATED UTILITY: GAS STORM SAN. COMMUNICATION FORCE MAIN CATV WATER TEL. ELECTRIC RAW WATER UNKNOWN RECLAIMED WATER N/A FIBER OPTIC CABLE

MATERIAL AS FOUND: D/I C/I STEEL WRAP-STEEL TILE PLASTIC TERRA COTTA ACP RCP CMP PVC UNK DB CABLE SMOOTH POUR ROUGH POUR OTHER

SIZE AS FOUND: 16" SIZE EXPECTED: 20"

UTILTIY CONDITION: GOOD FAIR POOR N/A

RIBBON INSTALLED: BLUE YELLOW RED GREEN N/A ORANGE WHITE PINK PURPLE

PAVEMENT TYPE: ASPHALT CONCRETE ASPHALT OVER CONCRETE GRAVEL BRICKS SIDEWALK N/A

PAVEMENT CONDITION: GOOD FAIR POOR N/A

SOIL CONDITIONS: HARD SOFT WET MOIST DRY SAND CLAY ROCK DIRT SOLID-ROCK

SHEET No.: 25
PROPOSED: New Utilities Roadway Mast Arm/Signal Pole Drainage

FORM BY: C.Reyes ASSISTED BY: D.J.

NUMBER OF HOLES: 1 Date: 5-19-16 TIME:

INSTALLED: PK HUB STEEL PIN CHIS "X" CHIS BOX
AT: CROWN EDGE OF UTILITY:

SURVEY PIN LOCATED BY: N/A

JOB MEASUREMENT TYPE: TENTHS METRIC INCHES

NOTES: Excavated to a depth of 4.04'
Found a 16" PVC F.M. (JEA water & sewer)

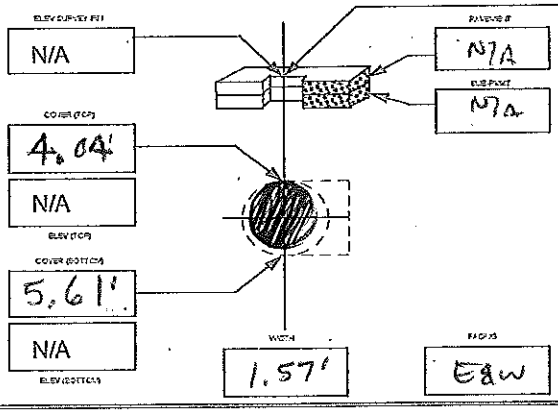

SURVEY INFORMATION
GIVEN ELEVATION
STATION (±) N/A OFFSET: N/A LT / RT

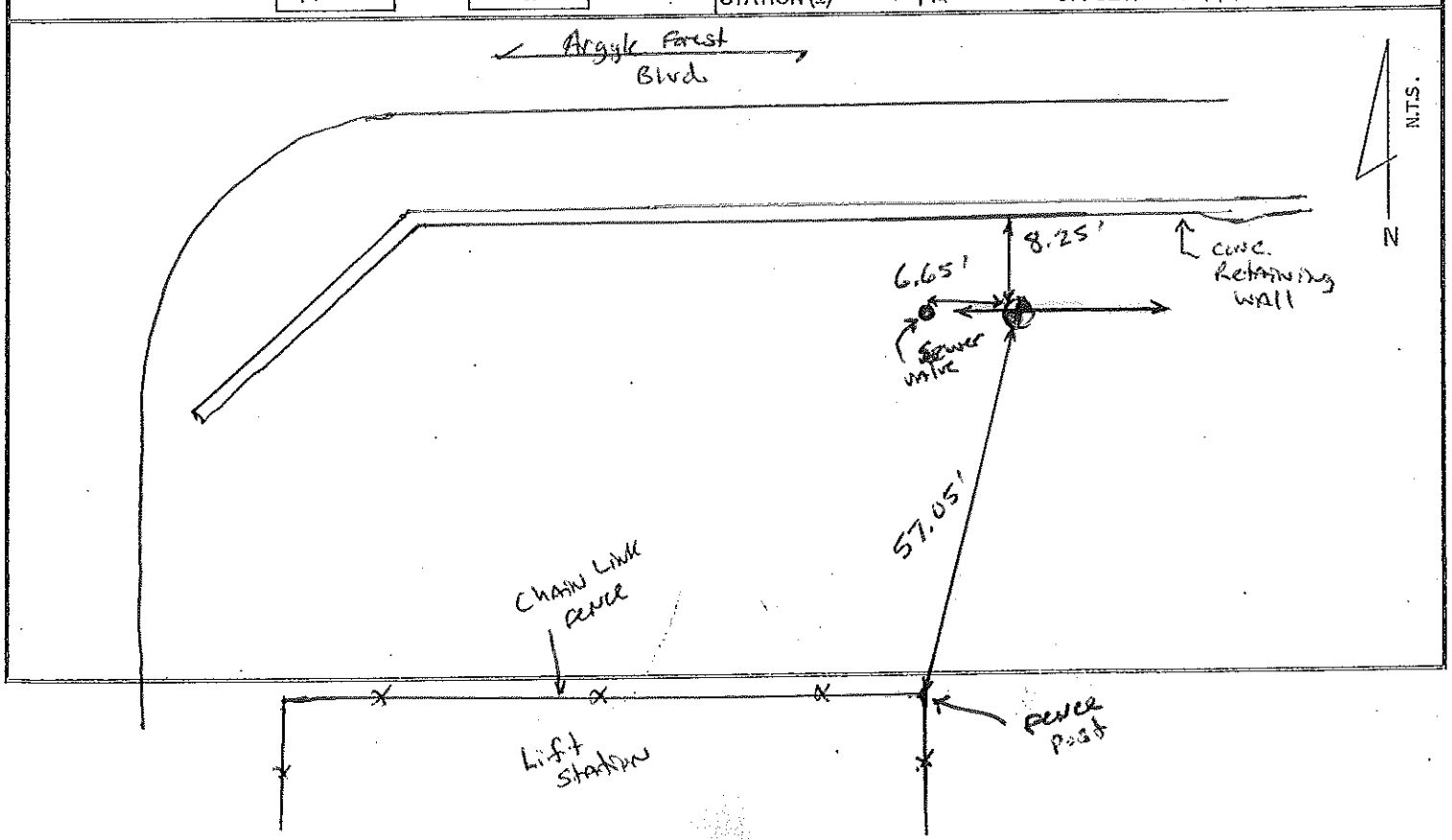

R. ALEMAN & Associates, Inc.
CONSULTING ENGINEERS
6199 Lake Gray Blvd., Suite 101, Jacksonville, FL 32244

VACUUM TEST HOLE REPORT

Test Hole No.: 2
FRA Job No.: 2258

PROJECT NAME: Argyle & Rampart - Pump Station Sites
Subcontract No.:
WORK ORDER No.: 15

LOCATE REQUESTED BY: R.E. Holland & Assoc.

REQUESTED LOCATE: GAS STORM (SAN.) COMMUNICATION FORCE MAIN CATV WATER TEL. ELECTRIC RAW WATER UNKNOWN RECLAIMED WATER N/A FIBER OPTIC CABLE

LOCATED UTILITY: GAS STORM (SAN.) COMMUNICATION FORCE MAIN CATV WATER TEL. ELECTRIC RAW WATER UNKNOWN RECLAIMED WATER N/A FIBER OPTIC CABLE

MATERIAL AS FOUND: D/I C/I STEEL WRAP-STEEL TILE PLASTIC TERRA COTTA ACP RCP CMP (PVC) UNK DB CABLE SMOOTH POUR ROUGH POUR OTHER

SIZE AS FOUND: 8" SIZE EXPECTED: 8"

UTILTIY CONDITION: (GOOD) FAIR POOR N/A

RIBBON INSTALLED: BLUE YELLOW RED (GREEN) N/A ORANGE WHITE PINK PURPLE

PAVEMENT TYPE: ASPHALT CONCRETE ASPHALT OVER CONCRETE GRAVEL BRICKS SIDEWALK (N/A)

PAVEMENT CONDITION: GOOD FAIR POOR (N/A)

SOIL CONDITIONS: HARD (SOFT) WET (MOIST) (DRY) SAND CLAY ROCK (DIRT) SOLID-ROCK

SHEET No.: 25

PROPOSED: New Utilities Roadway Mast Arm/Signal Pole Drainage

FORM BY: C.Reyes ASSISTED BY: D.S

NUMBER OF HOLES: 1 Date: 5-19-16 TIME:

INSTALLED: PK (HUB) STEEL PIN CHIS "X" CHIS BOX

AT: (CROWN) EDGE OF UTILITY:

SURVEY PIN LOCATED BY: N/A

JOB MEASUREMENT TYPE: TENTHS METRIC INCHES

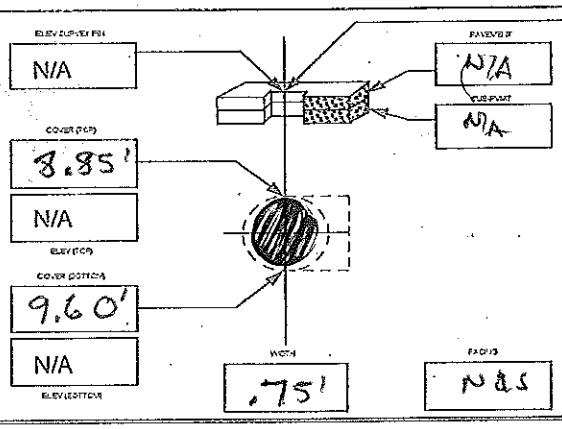

NOTES: Excavated to a depth of 8.85'

• Found a 8" PVC SAN. (JEA water & sewer)

SURVEY INFORMATION
GIVEN ELEVATION
STATION (±) N/A OFFSET: N/A LT / RT

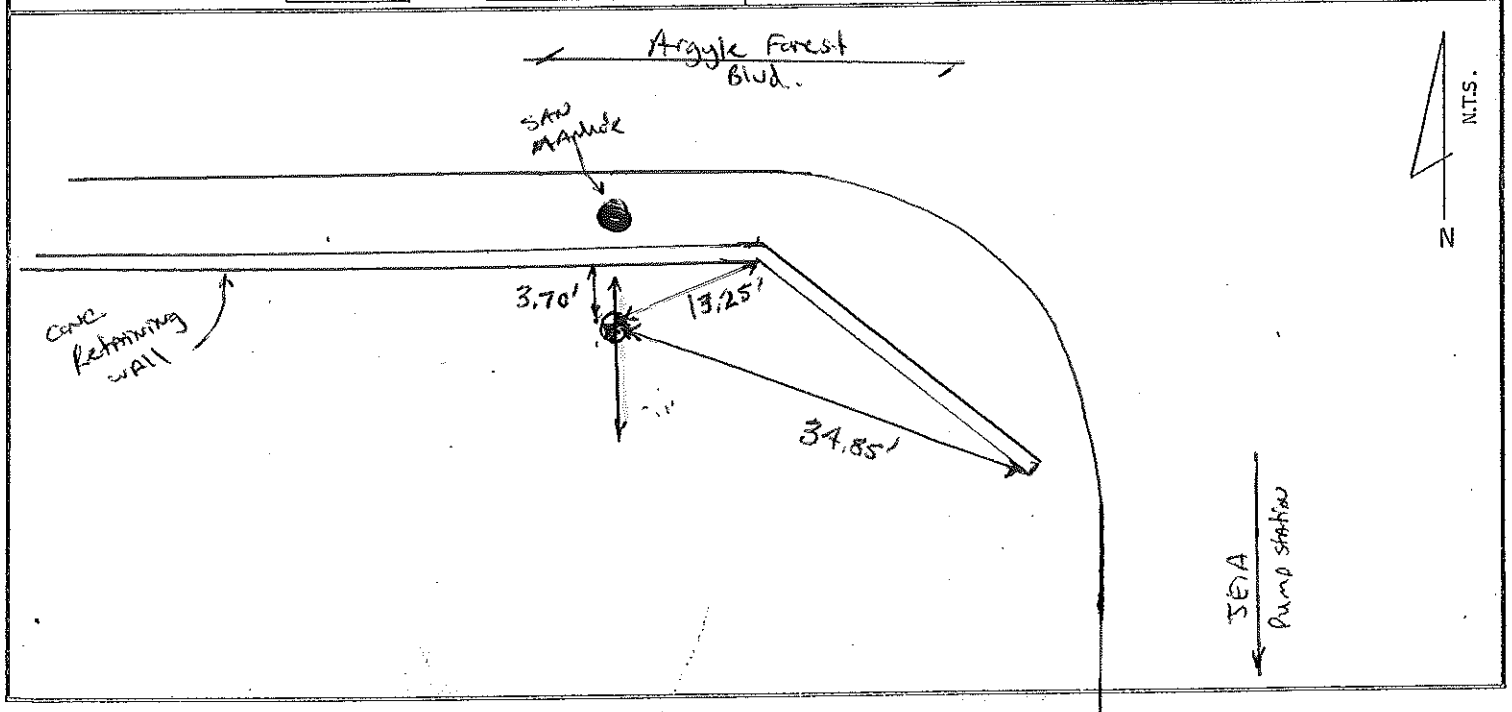

R. ALEMAN & Associates, Inc.
CONSULTING ENGINEERS
6199 Lake Gray Blvd., Suite 101, Jacksonville, FL 32244

VACUUM TEST HOLE REPORT

Test Hole No.: 3
FRA Job No.: 2258

PROJECT NAME: Argyle & Rampart - Pump Station Sites	Subcontract No.: WORK ORDER No.: 15
LOCATE REQUESTED BY: R.E. Holland & Assoc.	PAVEMENT TYPE: ASPHALT CONCRETE ASPHALT OVER CONCRETE GRAVEL BRICKS SIDEWALK (N/A)
REQUESTED LOCATE: GAS STORM SAN. COMMUNICATION (FORCE MAIN) CATV WATER TEL. ELECTRIC RAW WATER UNKNOWN RECLAIMED WATER N/A FIBER OPTIC CABLE	PAVEMENT CONDITION: GOOD FAIR POOR (N/A)
LOCATED UTILITY: GAS STORM SAN. COMMUNICATION (FORCE MAIN) CATV WATER TEL. ELECTRIC RAW WATER UNKNOWN RECLAIMED WATER N/A FIBER OPTIC CABLE	SOIL CONDITIONS: (HARD) (SOFT) WET (MOIST) (DRY) SAND CLAY ROCK (DIRT) SOLID-ROCK
MATERIAL AS FOUND: D/I C/I STEEL WRAP-STEEL TILE PLASTIC TERRA COTTA ACP RCP CMP (PVC) UNK DB CABLE SMOOTH POUR ROUGH POUR OTHER	SHEET No.: 25 PROPOSED: New Utilities Roadway Mast Arm/Signal Pole Drainage
	FORM BY: C.Reyes ASSISTED BY: D.J.
SIZE AS FOUND: 20" SIZE EXPECTED: 20"	NUMBER OF HOLES: 1 Date: 5-19-16 TIME:
UTILTIY CONDITION: (GOOD) FAIR POOR N/A	INSTALLED: PK (HUB) STEEL PIN CHIS "X" CHIS BOX
RIBBON INSTALLED: BLUE YELLOW RED (GREEN) N/A ORANGE WHITE PINK PURPLE	AT: (GROWN) EDGE OF UTILITY:
	SURVEY PIN LOCATED BY: N/A
	JOB MEASUREMENT TYPE: TENTHS METRIC INCHES
	NOTES: Excavated to a depth of 4.33' Found a 20" PVC F.M. (JEA water & sewer)
	SURVEY INFORMATION / GIVEN ELEVATION / STATION (±) N/A OFFSET: N/A LT / RT

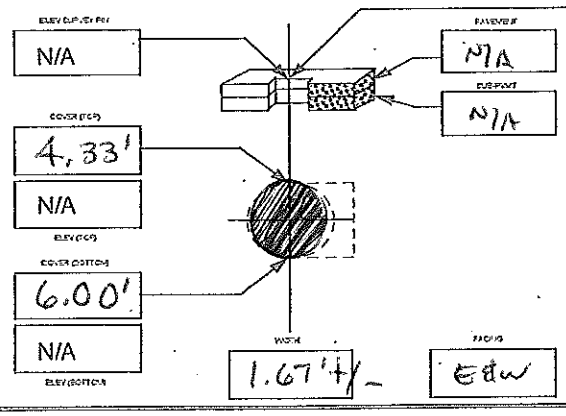

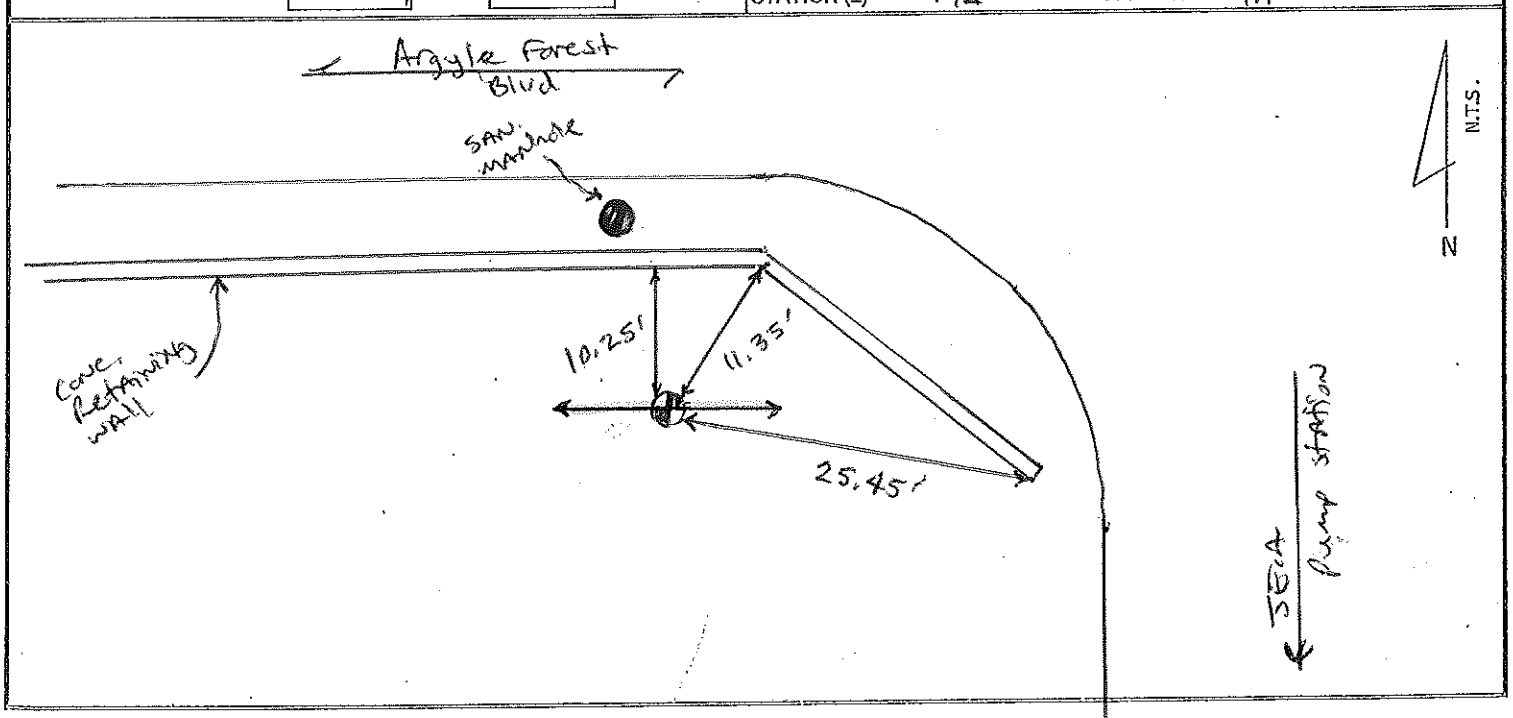

R. ALEMAN
& Associates, Inc.
CONSULTING ENGINEERS
6155 Lake Gray Blvd., Suite 101, Jacksonville, FL 32244

VACUUM TEST HOLE REPORT

Test Hole No.: 4
FRA Job No.: 2258

PROJECT NAME: Argyle & Rampart-Pump Station Sites
Subcontract No.:
WORK ORDER No.: 15

LOCATE REQUESTED BY: R.E. Holland & Assoc.

REQUESTED LOCATE: GAS STORM SAN. COMMUNICATION FORCE MAIN CATV (WATER) TEL. ELECTRIC RAW WATER UNKNOWN RECLAIMED WATER N/A FIBER OPTIC CABLE

LOCATED UTILITY: GAS STORM SAN. COMMUNICATION FORCE MAIN CATV (WATER) TEL. ELECTRIC RAW WATER UNKNOWN RECLAIMED WATER N/A FIBER OPTIC CABLE

MATERIAL AS FOUND: D/I C/I STEEL WRAP-STEEL TILE PLASTIC TERRA COTTA ACP RCP CMP (PVC) UNK DB CABLE SMOOTH POUR ROUGH POUR OTHER

SIZE AS FOUND: 16" SIZE EXPECTED: 16"

UTILTIY CONDITION: (GOOD) FAIR POOR N/A

RIBBON INSTALLED: (BLUE) YELLOW RED GREEN N/A ORANGE WHITE PINK PURPLE

PAVEMENT TYPE: ASPHALT CONCRETE ASPHALT OVER CONCRETE GRAVEL BRICKS SIDEWALK (N/A)

PAVEMENT CONDITION: GOOD FAIR POOR (N/A)

SOIL CONDITIONS: (HARD) SOFT WET MOIST (DRY) SAND (CLAY) ROCK DIRT SOLID-ROCK

SHEET No.: C-3

PROPOSED: New Utilities Roadway Mast Arm/Signal Pole Drainage

FORM BY: C.Reyes ASSISTED BY: D.J.

NUMBER OF HOLES: 1 Date: 5-19-16 TIME:

INSTALLED: PK (HUB) STEEL PIN CHIS "X" CHIS BOX

AT: (CROWN) EDGE OF UTILITY:

SURVEY PIN LOCATED BY: N/A

JOB MEASUREMENT TYPE: TENTHS METRIC INCHES

NOTES: Excavated to a depth of 3.74'

Found a 16" PVC w.m (JEA water & sewer)

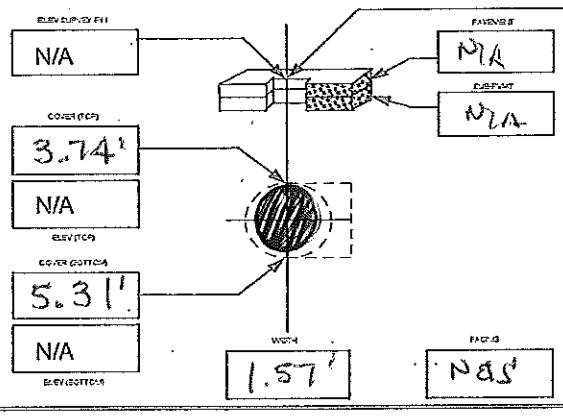

SURVEY INFORMATION
GIVEN ELEVATION
STATION (±) N/A OFFSET: 20.20' (LT) / RT

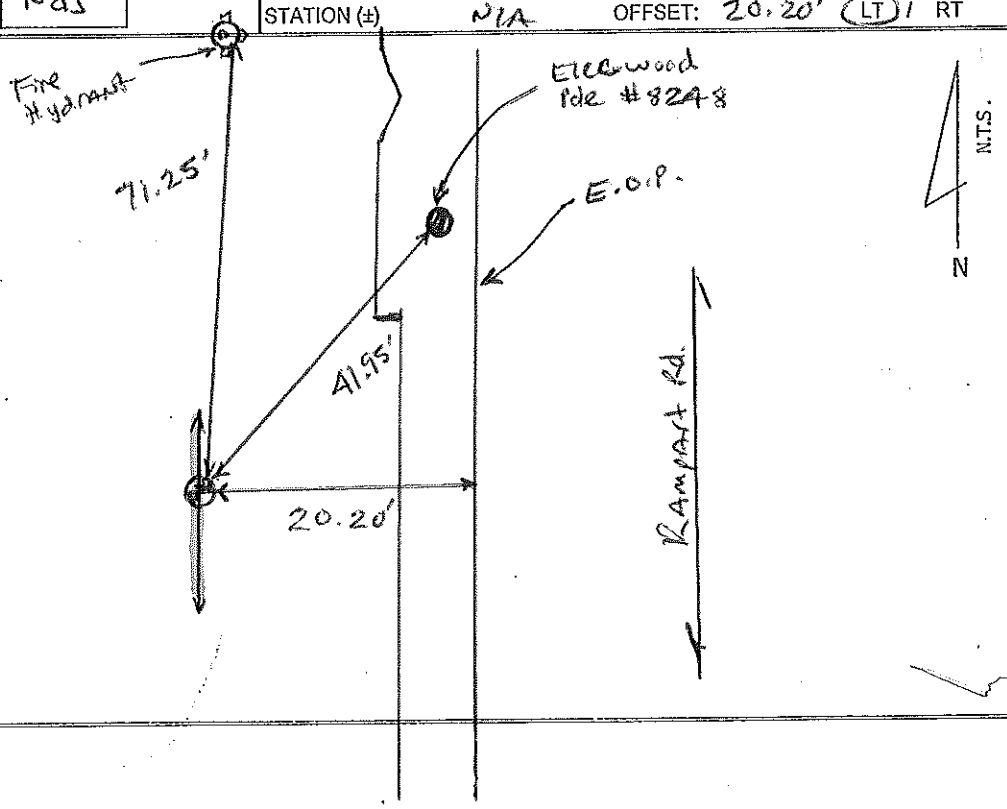

CHECKLIST FOR ROOFING SYSTEM

CONTACT INFORMATION: **INDEX NUMBER:**

ROOFING CONTRACTOR (NAME & ADDRESS)	TELEPHONE NO.:	**FAX:**
	E-MAIL ADDRESS:	**CONTACT:**
CLIENT (NAME & ADDRESS)	TELEPHONE NO.:	**FAX:**
	E-MAIL ADDRESS:	**CONTACT:**

OVERVIEW OF WORK: *(Submit 1 form per roof area)*

Building Name & Number:		
Building Dimensions: Length: *ft/m;*	Width: *ft/m.;*	Height *ft/m.*
Roof Slope:		
Parapet Height ,max *(in./m)*:	Parapet Height ,min *(in /m):*	
Type of Work: ☐ New Construction ☐ Recover (New roof over existing Roofing System) ☐ Reroof (New cover/remove existing roofing system to deck) ☐ Other		
FM Approved RoofNav Assembly Numbers:		

ROOF SURFACING:

☐ None	
☐ Coating	*(Trade Name/Application Rate)*
☐ Granules	*(Application Rate)*
☐ Gravel/Slag	*(Application Rate)*
☐ Ballast: ☐ Stone Size ☐ Pavers *(Beveled or square edge)*; ☐ Other: Ballast Weight (psf): Field: Perimeter: Corners:	

ROOF COVER/MEMBRANE:
(Please provide ALL applicable details including trade name, type, number of plies, thickness, reinforced, adhesive)

☐ Panel: ☐ Through Fastened Metal ☐ Standing Seam metal ☐ Fiber Reinforced Plastic (FRP) ☐ Other:			
☐ Built Up Roofing (BUR)			
☐ Modified Bitumen			
☐ Single Ply:	☐ Adhered	☐ Fastened	☐Ballasted
☐ Spray Applied			
☐ Other:			

BASE SHEET:
(Please include Trade Name, Type, and Width)

☐ None		
Trade Name:		Width: ☐ 36 In. ☐ 1 meter (39 In.)
☐ Fastened		☐ Adhered
☐ Secured per RoofNav	**OR**	☐ Per FM Global Loss Prevention Data Sheet 1-29
Comments:		
☐ Air Retarder		
☐ Vapor Retarder		

INSULATION

Layer	**Trade Name**	**Thickness (In.)**	**Fastened**	**Adhered**	**Tapered**
1. Top			☐	☐	☐
2. Next			☐	☐	☐
3. Next			☐	☐	☐
4. Next			☐	☐	☐

☐ Glass Fiber/Mineral Wool/Batt	☐ Facer Type/Vapor Barrier
☐ Thermal Barrier	

CHECKLIST FOR ROOFING SYSTEM

☐ Other:	
☐ None	

DECK:
(Please include manufacturer, type, yield strength, thickness/gage, etc.)

☐ Steel:	
☐ LWIC (Form Deck):	☐ Cementitious Wood Fiber:
☐ Concrete: ☐ Pre-cast panels or ☐ Cast in Place	
☐ Wood	
☐ Fiber Reinforced Cement	☐ Fiber Reinforced Plastic
☐ Gypsum: ☐ Plank	☐ Poured
☐ Other:	
Comments:	

ROOF STRUCTURE (Include Size, Gage, Etc.):

☐ Purlins ☐ "C" OR ☐ "Z"		
☐ Joists ☐ Wood OR ☐ Steel		
☐ Beams ☐ Wood OR ☐ Steel		
☐ Other:		
Spacing: Field:	Perimeter:	Corners:
Comments:		

FASTENERS USED IN ROOF ASSEMBLY:

Roof Cover Fasteners: Trade Name:		Length:	Diameter:
Stress Plate/Batten:			
Spacing: Field: X	Perimeter: X	Corners: X	
Insulation Fasteners: Trade Name:	Type:		
Size:	Stress Plate:		
Spacing: Field:	Perimeter:	Corners:	
Deck Or Roof Panels Fasteners: Trade Name:	Type:		
Length:	Size Washer:		
If Weld: Size:	Weld:	Washer:	
Deck Side Lap Fasteners: Field: X	Perimeter: X	Corners: X	
Spacing: Field: X	Perimeter: X	Corners: X	
Base Sheet Fasteners Trade Name:	Type:		
Head Diameter:	Length:		
Spacing: (Attached Sketches as necessary) Spacing Along Laps: Field:	Perimeter:	Corners:	
No. Intermediate Rows: Field:	Perimeter:	Corners:	
Spacing Along Intermediate Rows: Field:	Perimeter:	Corners:	

PERIMETER FLASHING:
(Attach a detailed sketch of metal fascia, gravel stop, nailer, coping, etc.)

☐ FM Approved Flashing	☐ Per FM Global Loss Prevention Data Sheet 1-49
☐ Other:	Comments:

DRAINAGE:

For new construction: Has roof drainage been designed by a Qualified Engineer per FM Global Loss Prevention Data Sheet 1-54 and the local building code? ☐ Yes ☐ No (Attach details)
For re-roofing and recovering: will the roof drainage be changed from the original design (for example: drain inserts, drains covered or removed, new expansion joints, blocked or reduced scupper size? ☐ Yes ☐ No If yes, were the changes reviewed by a Qualified Engineer? ☐ Yes ☐ No (Attach details)
Is secondary (emergency) roof drainage provided per FM Global Data Sheet 1-54? ☐ Yes ☐ No (Attach details)

CHECKLIST FOR ROOFING SYSTEM

FM Global OFFICE REVIEW
(Please leave blank for FM Global Office Review)

WIND:

Design Wind Speed: *(mph)*	Ground Terrain: ☐ B ☐ C ☐ D
Uplift Pressure in field: *(psf)*	Uplift Rating Required:
Adequate Uplift Rating Provided:	Adequate? ☐ Yes ☐ No

FIRE:

Internal Assembly Rating:	☐ Class 1	☐ Class 2	☐ Non-Combustible		
External Fire Rating:	☐ Class A	☐ Class B	☐ Class C	☐ None	
Concealed Spaces?	☐ Yes	☐ No	Sprinklers below Roof?	☐ Yes	☐ No
Adequate?	☐ Yes	☐ No			

HAIL:

Hail Rating Needed?	☐ SH	☐ MH	☐ None	Hail Rating Provided?	☐ SH	☐ MH	☐ None
Adequate?	☐ Yes	☐ No					

COLLAPSE:

If standing seam, has collapse been reviewed?	☐ Yes	☐ No

COMMENTS:

ABBREVIATIONS

&	AND
<	ANGLE
@	AT
AB	ANCHOR BOLT
ABV	ABOVE
ACMU	ACOUSTICAL CONCRETE MASONRY UNIT
AFF	ABOVE FINISHED FLOOR
AFG	ABOVE FINISHED GRADE
AL, ALUM	ALUMINUM
AMP	ACOUSTICAL METAL PANELS
ANOD	ANODIZE(D)
ASSY	ASSEMBLY
BBT	BIOBASED TILE
BD	BOARD
BEV	BEVEL(ED)
BLDG	BUILDING
BLK	BLOCK
BLKG	BLOCKING
BRG	BEARING
BRK	BRICK
BRS	BRASS
BRZ	BRONZE
BTM	BOTTOM
C TO C	CENTER TO CENTER
CAB	CABINET
CARP	CARPET
CEM	CEMENT
CF	COMPRESSIBLE FILLER
CGFB	CEMENTITIOUS GLASS FIBER BOARD
CH	CONCRETE HARDENER
CHAM	CHAMFER
CHAN	CHANNEL
CIP	CAST IN PLACE
CJ	CONTROL JOINT
CL OR ℄	CENTERLINE
CLG	CEILING
CLKG	CAULKING
CMU	CONCRETE MASONRY UNIT
COL	COLUMN
COMP	COMPRESSIBLE
CONC	CONCRETE
CONT	CONTINUOUS
CRS	COURSE(S)
CT	CERAMIC TILE
DET	DETAIL
DF	DRINKING FOUNTAIN
DIA	DIAMETER
DIAG	DIAGONAL
DIM	DIMENSION
DISP	DISPENSER
DN	DOWN
DP	DAMPPROOFING
DR	DRAIN
ELEC	ELECTRICAL
ELEV	ELEVATION
EQ	EQUAL(LY)
EQPT	EQUIPMENT
EWC	ELECTRICAL WATER COOLER
EXP	EXPOSED
EJ	EXPANSION JOINT
EXIST, (E)	EXISTING
FD	FLOOR DRAIN
FE	FIRE EXTINGUISHER
FF	FACTORY FINISH
FGL	FIBERGLASS
FIN	FINISH(ED)
FLG	FLASHING
FL	FLOOR(ING)
FLR	FILLER
FR	FRAME
FRP	FIBERGLASS REINFORCED PLASTIC
FO	FRAME OPENING
FV	FIELD VERIFY
FXD	FIXED
GA	GAGE, GAUGE
GALV	GALVANIZED
GL	GLASS
GB	GLASS BLOCK
GRTG	GRATING
GYP	GYPSUM
GWB	GYPSUM WALL BOARD
HARD	HARDENER
HD	HEAVY DUTY
HDWD	HARDWOOD
HDWR	HARDWARE
HGR	HANGER
HGT	HEIGHT
HM	HOLLOW METAL
HOR	HORIZONTAL
HP	HIGH POINT
HR	HANDRAIL
IN	INCH
INST	INSTRUMENTATION
INSUL	INSULATION
JC	JANITOR'S CLOSET
JT	JOINT
JT FLR	JOINT FILLER
L	LINE OF STRUCTURAL ANGLE DESIGNATION
LAB	LABORATORY
LAD	LADDER
LAM	LAMINATED
LAV	LAVATORY
LG	LAMINATED GLASS
LKR	LOCKER
LNTL	LINTEL
LP	LOW POINT
LT	LIGHT(S)
MAS	MASONRY
MATL	MATERIAL
MAX	MAXIMUM
MEMB	MEMBRANE
MFR	MANUFACTURER
MIN	MINIMUM
MISC	MISCELLANEOUS
MO	MASONRY OPENING
MR	MOISTURE RESISTANT
MRAT	MOISTURE RESISTANT ACOUSTICAL TILE
MTD	MOUNTED
MTG	MOUNTING
MTL	METAL
NIC	NOT IN CONTRACT
NOM	NOMINAL
NTS	NOT TO SCALE
OC	ON CENTER
OH	OVERHANG
OPNG	OPENING
OPP HD	OPPOSITE HAND
ORD	OVERFLOW ROOF DRAIN
OSB	ORIENTED STRAND BOARD
OV	OVER
OVHD	OVERHEAD
PERIM	PERIMETER
PL	PLATE
PL	PROPERTY LINE
PLAS	PLASTER
PLK	PLANK
PLYWD	PLYWOOD
PM	PRESSED METAL
PR	PAIR
PRD	PROMENADE ROOF DRAIN
PRCST	PRECAST
PREFAB	PRE-FABRICATED
PT	PRESSURE TREATED
PRMLD	PREMOLDED
PSF	POUNDS PER SQUARE FOOT
PTD	PAINTED
QT	QUARRY TILE
QTB	QUARRY TILE BASE
R	RISER(S)
R+S	BACKER ROD & SEALANT
RB	RUBBER BASE
RD	ROOF DRAIN
RECT	RECEPTACLE
REF	ROOF EXHAUST FAN
REINF	REINFORCE (D, ING)
REQ'D	REQUIRED
REV	REVISED
RF	ROOF FAN
RFG	ROOFING
RGH	ROUGH
RJ	REVEAL/RUSTICATION JOINT
RL	RAIN LEADER
RLG	RAILING
RM	ROOM
RO	ROUGH OPENING
RT	RUBBER TILE
RWL	RAIN WATER LEADER
S	STEEL S-SHAPE DESIGNATION
SAT	SUSPENDED ACOUSTICAL TILE
SB	SEAMLESS BASE
SCHD	SCHEDULE
SCRN	SCREEN(ED, ING)
SECT	SECTION
SF	SEAMLESS FLOORING
SGFT	STRUCTURAL GLAZED FACING TILE
SHT	SHEET
SIM	SIMILAR
SK	SINK
SL	SLOPE
SLNT	SEALANT
SPEC	SPECIFICATION, SPECIFIED
SST	STAINLESS STEEL
STD	STANDARD
STL	STEEL
STOR	STORAGE
STRU	STRUCTURE(S, URAL)
STWY	STAIRWAY
SUPT	SUPERINTENDENT
SUSP	SUSPENDED
T	TREAD(S)
TBM	TRAFFIC BEARING MEMBRANE
T&G	TONGUE AND GROOVE
TEMP	TEMPERATURE
TEMP	TEMPERED
TEMP	TEMPORARY
TER	TERRAZZO
TERB	TERRAZZO BASE
THK	THICK(NESS)
THR	THRESHOLD
TKBD	TACKBOARD
TOB	TOP OF BRICK
TOC	TOP OF CONCRETE
TOIL	TOILET
TOM	TOP OF MASONRY
TOPG	TOPPING
TOS	TOP OF STEEL
TS	STRUCTURAL TUBING (STEEL UNLESS NOTED)
TSL	TOP OF SLAB
TWF	THROUGH WALL FLASHING
TYP	TYPICAL
UC	UNDERCUT
UON	UNLESS OTHERWISE NOTED
UR	URINAL
VB	VAPOR BARRIER
VCT	VINYL COMPOSITION TILE
VERT	VERTICAL
VEST	VESTIBULE
VTR	VENT THRU ROOF
W	WITH
W/	WITH
W/A	WHERE APPLICABLE
W/O	WITHOUT
WC	WATER CLOSET
WD	WOOD
WDW	WINDOW
WF	WIDE FLANGE
WPG	WATERPROOFING
WT	STEEL TEE-SHAPE DESIGNATION
WWF	WELDED WIRE FABRIC

LINE TYPES (UNLESS OTHERWISE NOTED)

- CONTINUOUS – NEW CONSTRUCTION
- DASHED ON CONSTRUCTION PLANS/SHEETS – HIDDEN ELEMENTS ABOVE, BELOW, OR BEYOND

MATERIAL SYMBOLS

- EARTH, SOIL
- GRAVEL
- BRICK
- CONCRETE BLOCK
- PRECAST CONCRETE
- CONC CAST IN PLACE
- WOOD–BLOCKING
- WOOD–FINISH
- PLYWOOD
- RIGID INSULATION
- BLANKET INSULATION
- STEEL
- ALUMINUM
- GROUT
- CAULK
- GLASS
- STRUCTURAL STEEL
- SHEET METAL, STEEL, GLASS, WATERPROOFING

DIMENSIONING SYSTEM

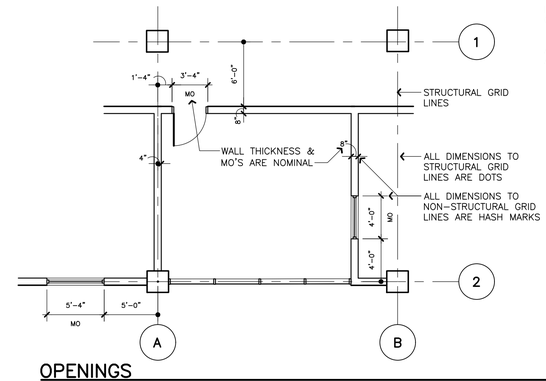

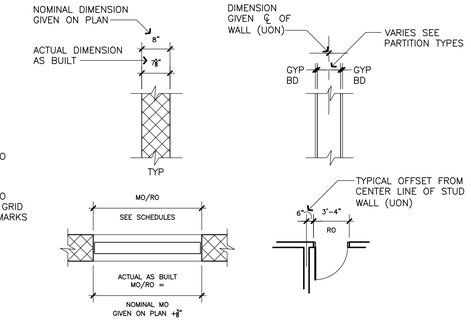

WINDOW OR LOUVER OPENING IN PLAN

TYPICAL DOOR LOCATION FOR STUD FRAMED WALLS

OPENINGS

USUALLY LABELED IN PLAN VIEW; HOWEVER, OPENINGS NOT SHOWN IN PLAN ARE LABELED ON ELEVATIONS

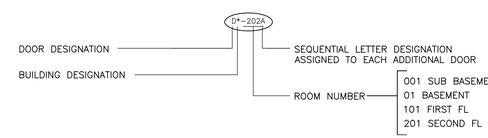

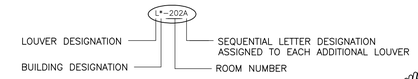

ACCESSORIES

R-13 — TOILET ROOM ACCESSORIES (SEE SPECIFICATION SECTION 10800)

SYMBOLS

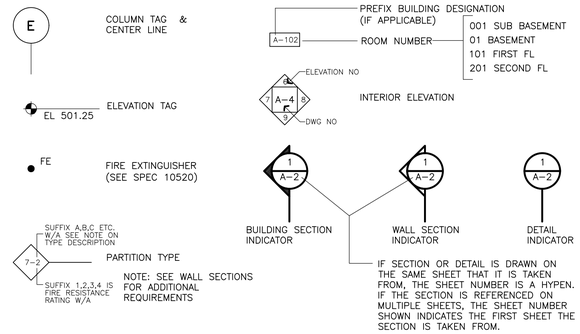

BUILDING CODE KEY DETERMINATIONS

PUMP STATION BUILDING

CODES REVIEWED	FLORIDA BUILDING CODE, SIXTH EDITION (FBC) FLORIDA FIRE PREVENTION CODE, SIXTH EDITION (FFPC) FLORIDA ACCESSIBILITY CODE FOR BUILDING CONSTRUCTION, SIXTH EDITION (FBC)			
ACCESSIBILITY SECTION 203.5	WASTEWATER PUMP STATION FREQUENTED BY SERVICE PERSONNEL ONLY SHALL NOT BE REQUIRED TO COMPLY			
BUILDING CLASSIFICATION OCCUPANCY – SECTION 306.3 CONSTRUCTION – SECTION 602.2	GROUP F-2 LOW HAZARD FACTORY INDUSTRIAL TYPE II B			
BUILDING HEIGHTS AND AREAS TABLE 504	MAX AREA MAX HEIGHT MAX STORIES	23,000 SF 55 FEET 3	ACTUAL 6,100 SF ACTUAL 22 FEET ACTUAL 1	
OCCUPANT LOAD SECTION 1004.1.2	GROUP F-2	6,100 SF / 100 SF PER OCCUPANT = 61 OCCUPANTS*		
PLUMBING FIXTURES TABLE 403.1 (FBC PLUMBING)	WATER CLOSET REQ'D LAVATORIES REQUIRED	1 1	PROVIDED 1 PROVIDED 1	
EXITS PER SPACE SECTION 1006	REQUIRED	1	ACTUAL 2	
MAX TRAVEL DISTANCE TABLE 1017.2	MAXIMUM	300 FEET	ACTUAL 141 FEET	
FIRE SEPARATION DISTANCE FIRE RESISTANCE RATING TABLE 602	TYPE II B	10≤ X <30 FEET FROM OTHER BLDG AND PROPERTY LINE = 0 HR ACTUAL 23 FEET –> 0 HR RATING FOR EXTERIOR WALLS		
STAIRS	N/A			
RAMPS	N/A			
HAZARDOUS CHEMICALS INTERIOR STORAGE	NO INTERIOR BULK STORAGE			
EXTERIOR STORAGE	NO. 2 DIESEL FUEL OIL 275 – 30,000 GAL MIN 5 FEET FROM BLDG AND PROPERTY LINE		ACTUAL 2,000 GAL ACTUAL 23 FEET	
SPRINKLERS REQUIRED	REQUIRED	NO	PROVIDED	NO
FIRE ALARM	REQUIRED	NO	PROVIDED	YES

*OCCUPANT LOAD USED FOR EGRESS CALCULATIONS. ACTUAL MAXIMUM OCCUPANT LOAD 5 EMPLOYEES FOR MAINTENANCE

ARCHITECTURAL SHEET INDEX

GENERAL NOTES

HEIGHT OF INTERIOR PARTITIONS ARE FROM FLOOR TO THE UNDERSIDE OF ROOF DECK (UNLESS OTHERWISE NOTED)

NOT ALL EQUIPMENT IS SHOWN FOR CLARITY. REFER TO THE APPROPRIATE DISCIPLINE SHEETS FOR SPECIFIC EQUIPMENT LAYOUT AND OTHER REQUIREMENTS

SEE "C" SHEETS FOR SIDEWALK, ROAD PAVING AND FINISH GRADE ELEVATIONS.

SEE "S" SHEETS FOR SIZE AND LOCATION OF CONCRETE PADS, TRENCHES, VAULTS, SUMPS, ETC

SEE "S" SHEETS FOR CONCRETE REINFORCEMENT

DO NOT SCALE FROM THE DRAWINGS

NOTIFY ARCHITECT IF CONSTRUCTION DOCUMENTS DIFFER FROM ACTUAL FIELD CONDITIONS PRIOR TO FABRICATION OR NEW CONSTRUCTION

LIFE SAFETY PLAN LEGEND

- EXIT ACCESS DOORWAYS
- SPACE EXIT
- EXIT SIGNS (SEE "E" DWGS)
- PATH OF TRAVEL
- TRAVEL DISTANCE (FEET)
- FE — WALL MOUNTED FIRE EXTINGUISHER
- 2 HR FIRE RATING (UL NO. U419 / UL NO. U443)

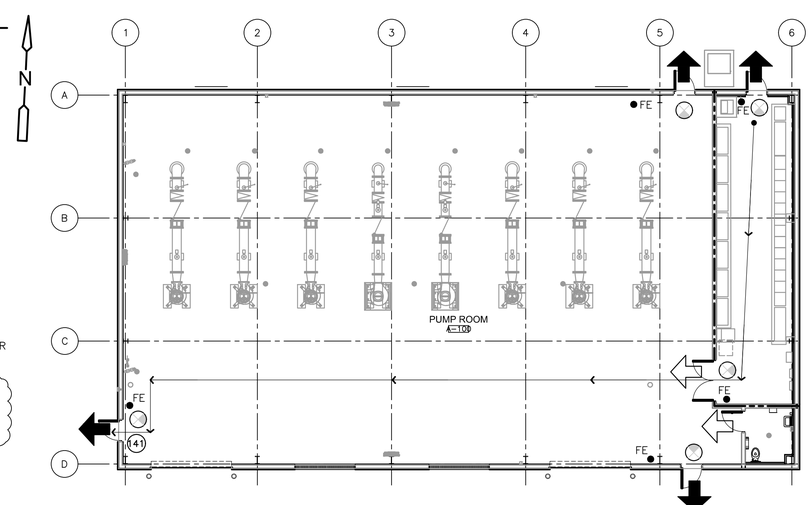

LIFE SAFETY FLOOR PLAN

3/32" = 1'-0"

CDM Smith
8381 Dix Ellis Trail, Suite 400
Jacksonville, FL 32258
Tel: (904) 731-7109
FL COA No. EB-0000020

NO.	BY	DATE	REVISIONS
6	X	X	
5	X	X	
4	X	X	
3	X	X	
2	X	X	
1	MTA	6/18	FM GLOBAL

FL CORP. ARCHITECT
LICENSE NO. AC-26000
101 SOUTHHALL LANE, SUITE 200
MATTHEWS, NC 28105

DESIGN ENGINEER / ARCHITECT
MICHAEL T. ALFORD
FLORIDA REGISTRATION NO.
AR92055

STATE OF FLORIDA — MICHAEL TODD ALFORD — AR 92055 — REGISTERED ARCHITECT

DESIGNER:	D. CHATER
DRAWN BY:	M. ALFORD
DATE:	JANUARY 2018
CHECKED BY:	M. ALFORD
DATE:	JANUARY 2018

JEA Building Community

JEA, BRADLEY ROAD
WASTEWATER BOOSTER PUMP STATION
ARCHITECTURAL GENERAL SHEET

PROJ. NO.	6103-108860
DATE:	JANUARY 2018
SCALE:	3/32" = 1'-0"
NO. SHEETS	40
SHEET NO.	A-1
DRAWING NO.	

ISSUED FOR BID

GENERAL NOTES

SEE SHEET A–1 FOR ADDITIONAL GENERAL NOTES

SEE SHEET A–1 FOR PUMP STATION BUILDING CODE KEY DETERMINATIONS AND LIFE SAFETY PLAN

METAL BUILDING COMPONENTS SHOWN ARE CONCEPTUAL FOR DESIGN INTENT ONLY. METAL BUILDING MANUFACTURER SHALL PROVIDE ACTUAL DESIGN AND CONSTRUCTION DETAILS

SEE "C" DWGS FOR FULL EXTENTS OF CONCRETE PAVEMENT

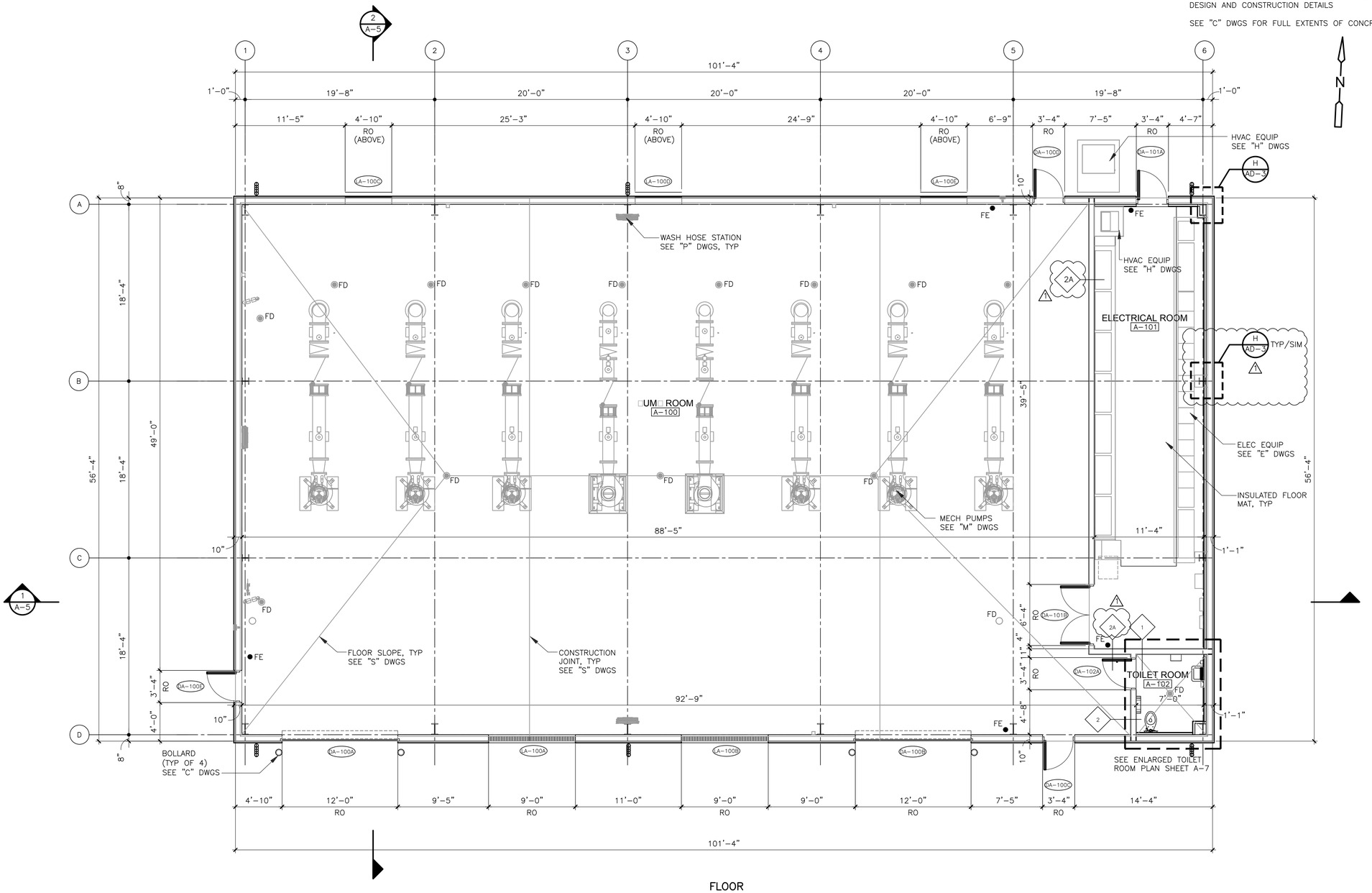

FLOOR

LAN

3/16" = 1'–0"

ISSUED FOR BID

CDM Smith
8381 Dix Ellis Trail, Suite 400
Jacksonville, FL 32258
Tel: (904) 731-7109
FL COA No. EB-0000020

FL CORP. ARCHITECTURE
LICENSE NUMBER
101 SOUTHHALL LANE,
SUITE 200,
MAITLAND, FL 32751

DESIGN ENGINEER / ARCHITECT
MICHAEL T. ALFORD
FLORIDA REGISTRATION NO.
AR92055

NO.	BY	DATE	REVISIONS
6.	X	X	X
5.	X	X	X
4.	X	X	X
3.	X	X	X
2.	X	X	X
1.	MTA	6/18	FM GLOBAL

DESIGNED BY: D. CHATER
DRAWN BY: D. CHATER
DATE: JANUARY 2018
CHECKED BY: M. ALFORD
DATE: JANUARY 2018

JEA Building Community

JEA, BRADLEY ROAD WASTEWATER BOOSTER PUMP STATION FLOOR PLAN

PROJ. NO. 6103-108860
DATE: JANUARY 2018
SCALE: 3/16" = 1'-0"

NO. SHEETS 41
SHEET NO. A-2
DRAWING NO.

Xrefs Attached= ZAPS001 [..\d2086728\ZAPS001.dwg]
RM02PSTA [..\d2086744\RM02PSTA.dwg]
ZHPS001 [..\d2086754\ZHPS001.dwg]
ZPPS001 [..\d2086762\ZPPS001.dwg]
SPSPL0000 [..\d2086736\SPSPL0000.dwg]
ZEPS001 [..\d2392995\ZEPS001.dwg]
Stamp= Michael Alford (AR92055) Current Layout= Layout1 Tue Jun 12, 2018 – 14:12

GENERAL NOTES

SEE SHEET A-1 FOR ADDITIONAL GENERAL NOTES

METAL BUILDING COMPONENTS SHOWN ARE CONCEPTUAL FOR DESIGN INTENT ONLY. METAL BUILDING MANUFACTURER SHALL PROVIDE ACTUAL DESIGN AND CONSTRUCTION DETAILS

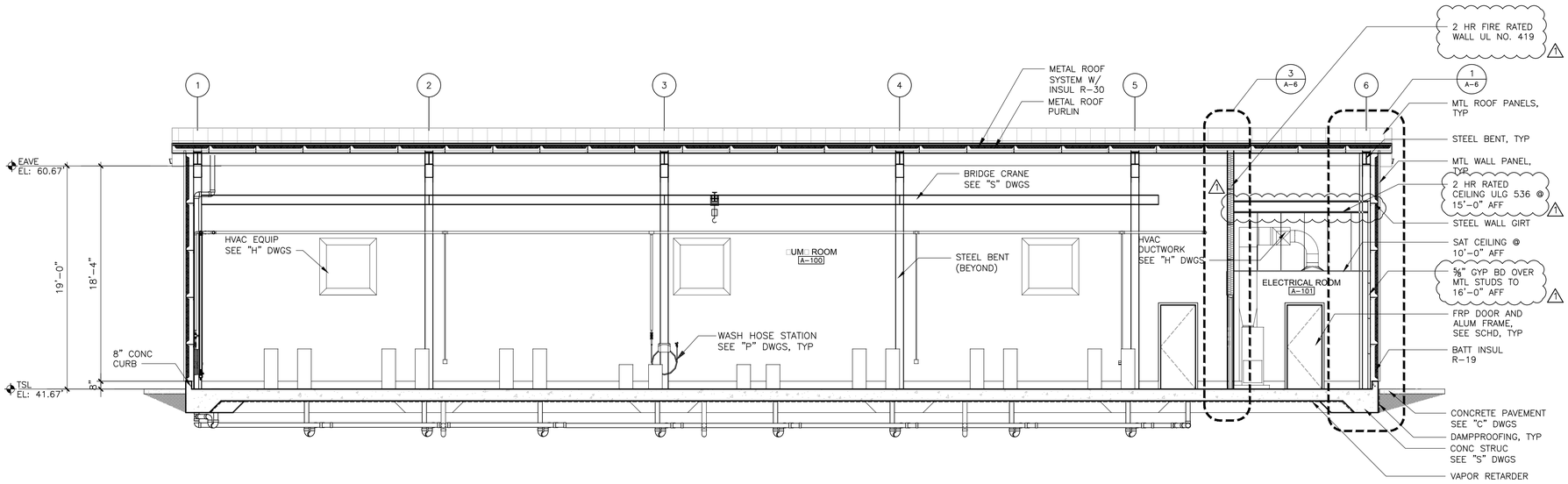

BUILDING
SECTION 1 / A-2
3/16" = 1'-0"

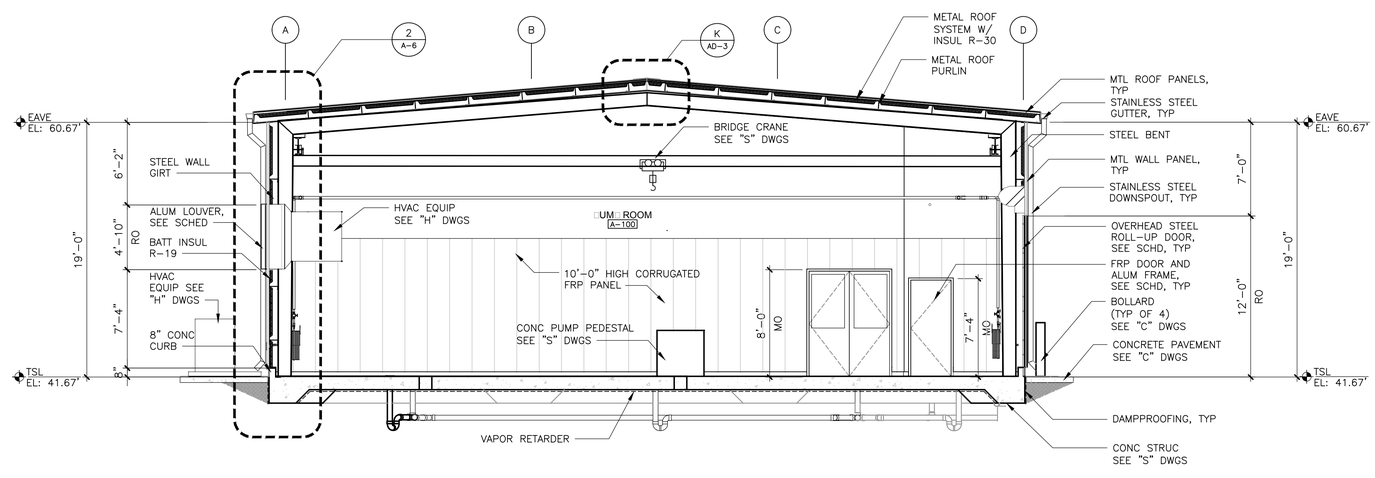

BUILDING
SECTION 2 / A-2
3/16" = 1'-0"

ISSUED FOR BID

CDM Smith
8381 Dix Ellis Trail, Suite 400
Jacksonville, FL 32258
Tel: (904) 731-7109
FL COA No. EB-0000020

NO.	BY	DATE	REVISIONS
6	X	X	X
5	X	X	X
4	X	X	X
3	X	X	X
2	X	X	X
1	MTA	6/18	FM GLOBAL

FL CORP. ARCHITECTURE
LICENSE NO. AR92055
101 SOUTHHALL LANE,
SUITE 200,
MAITLAND, FL 32751

DESIGN ENGINEER / ARCHITECT
MICHAEL T. ALFORD
FLORIDA REGISTRATION NO.
AR92055

STATE OF FLORIDA
MICHAEL TODD ALFORD
AR 92055
REGISTERED ARCHITECT

DESIGNED:	D. CHATER
DRAWN BY:	A. SCHWAGER
DATE:	JANUARY 2018
CHECKED BY:	D. CHATER
DATE:	JANUARY 2018

JEA Building Community

JEA, BRADLEY ROAD
WASTEWATER BOOSTER PUMP STATION
BUILDING SECTIONS

PROJ. NO.	6103-108860
DATE:	JANUARY 2018
SCALE:	3/16" = 1'-0"
NO. SHEETS	78
SHEET NO.	44
DRAWING NO.	A-5

Xrefs Attached= ZAPS001 [..\d2086728\ZAPS001.dwg]
ZAPS001E [..\d2392995\ZAPS001E.dwg]
ZHPS001 [..\d2086754\ZHPS001.dwg]
ZPPS001 [..\d2086762\ZPPS001.dwg]
SWZ000BP [..\d2086736\SWZ000BP.dwg]
Stamp=Florida_Michael Alford [..\d2086697\Stamp=Florida_Michael Alford.dwg]
Plotted by: mathew.antonio@cdmsmith.com Plot Date: Tue Jun 12, 2018 - 15:07
C:\cdmsm\anandarajv\d2086727\A005APS85.dwg Current Layout Tab = Layout1

GENERAL NOTES

SEE SHEET A-1 FOR ADDITIONAL GENERAL NOTES

METAL BUILDING COMPONENTS SHOWN ARE CONCEPTUAL FOR DESIGN INTENT ONLY. METAL BUILDING MANUFACTURER SHALL PROVIDE ACTUAL DESIGN AND CONSTRUCTION DETAILS

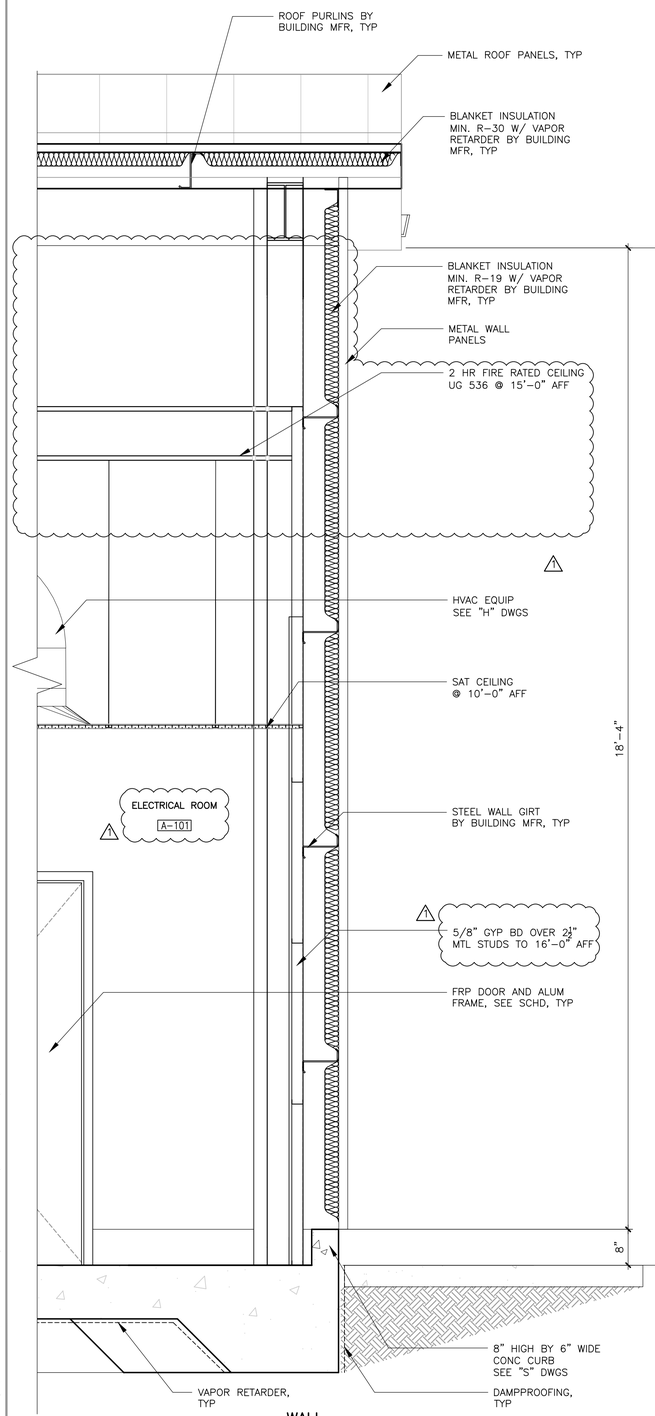

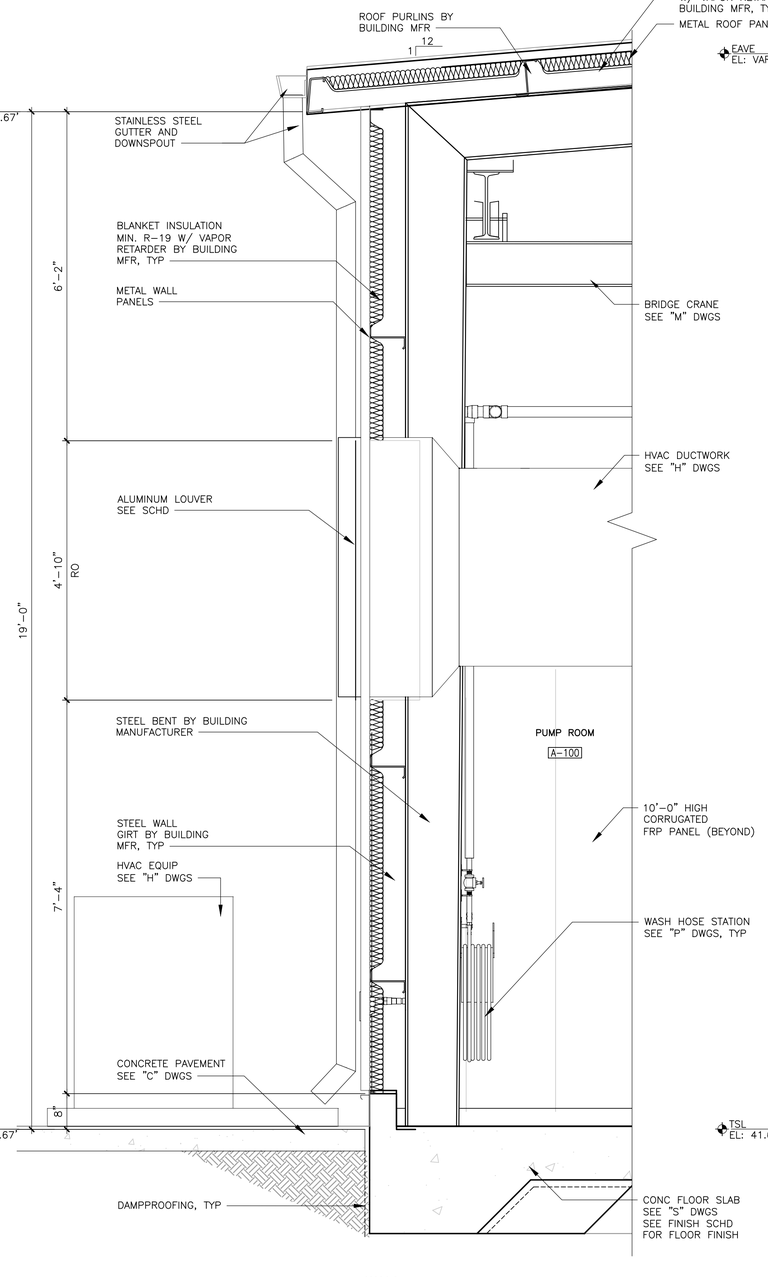

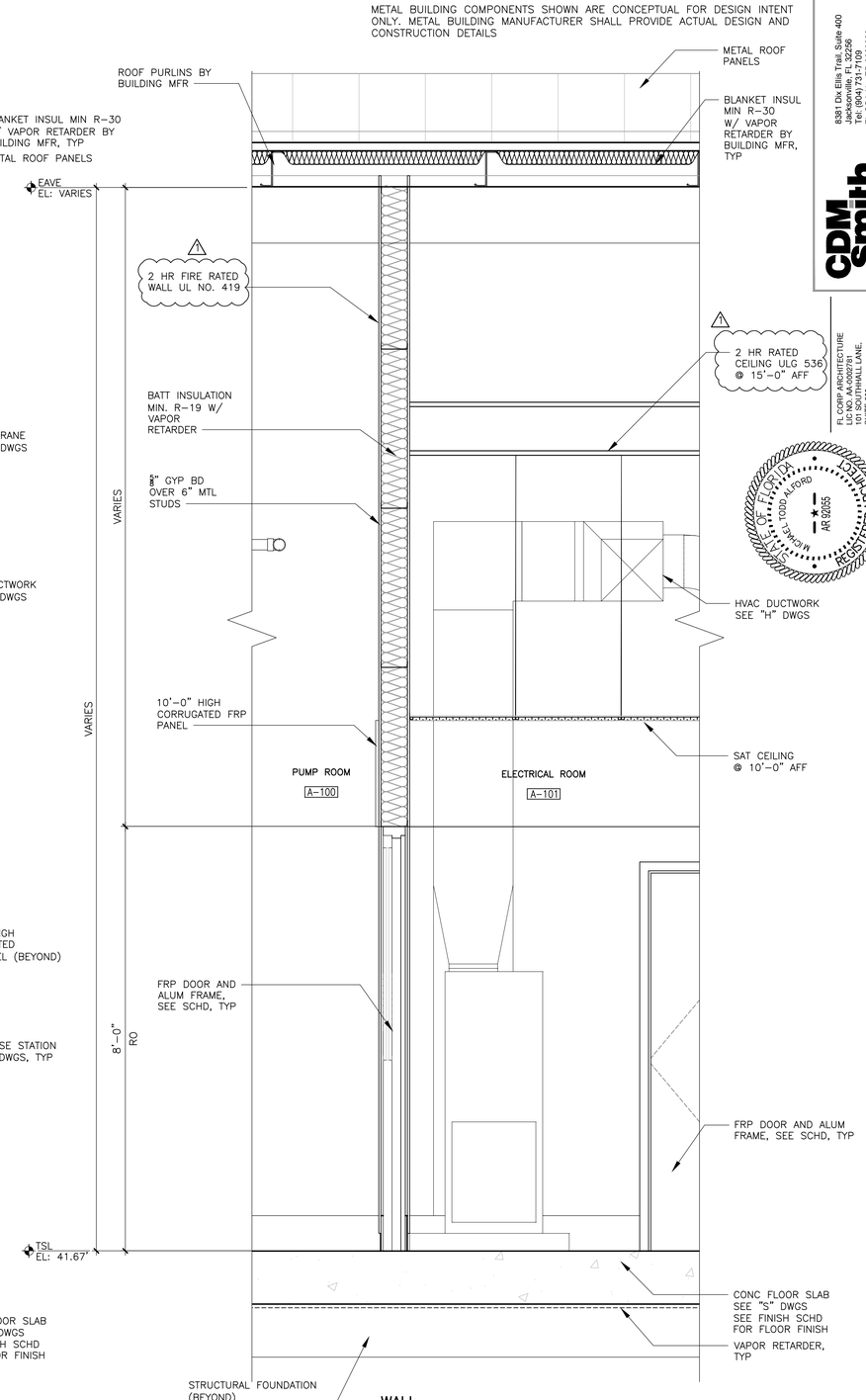

8381 Dix Ellis Trail, Suite 400
Jacksonville, FL 32258
Tel: (904) 731-7109
FL COA No. EB-0000020

CDM Smith

NO.	BY	DATE	REVISIONS
6	X	X	X
5	X	X	X
4	X	X	X
3	X	X	X
2	X	X	X
1	MTA	6/18	FM GLOBAL

FL CORP. ARCHITECTURE
LICENSE NUMBER
101 SOUTHHALL LANE,
SUITE 200,
MAITLAND, FL 32751

DESIGN ENGINEER / ARCHITECT
MICHAEL T. ALFORD
FLORIDA REGISTRATION NO.
AR92055

STATE OF FLORIDA
MICHAEL T. (TODD) ALFORD
AR 92055
REGISTERED ARCHITECT

DESIGNED:	D. CHATER
DRAWN BY:	A. SENGWAYER
DATE:	JANUARY 2018
CHECKED BY:	D. CHATER
DATE:	JANUARY 2018

JEA Building Community sm

JEA, BRADLEY ROAD
WASTEWATER BOOSTER PUMP STATION
WALL SECTIONS

PROJ. NO.	6103-106860
DATE:	JANUARY 2018
SCALE:	3/4" = 1'-0"

NO. SHEETS IN SET	45
SHEET NO.	27
DRAWING NO.	A-6

ISSUED FOR BID

PUMP STATION FINISH SCHEDULE

ROOM NAME	ROOM NUMBER	FLOOR		WALL							CEILING			NOTE NO.
				MATERIAL	FINISH				BASE					
		MATERIAL	FINISH		NORTH	EAST	SOUTH	WEST	MATERIAL	DETAIL	MATERIAL	FINISH	HEIGHT	
PUMP ROOM	A–100	CONCRETE	SEALED	FRP PANEL/ GYP BD	MFR FINISH	MFR FINISH/ PAINTED	MFR FINISH	MFR FINISH	CONC CURB	––	––	––	19'–4"	2
ELECTRICAL ROOM	A–101	CONCRETE	SEALED	GYP BOARD	PAINTED	PAINTED	PAINTED	PAINTED	RUBBER	B	STL	SAT	10'–0"	––
TOILET ROOM	A–102	CONCRETE	CERAMIC TILE	CGFB	CERAMIC TILE	CERAMIC TILE	CERAMIC TILE	CERAMIC TILE	CERAMIC TILE	A	STL	SAT	9'–0"	1

NOTES:

1. CERAMIC TILE PATTERN SHOWN ON SHEET A–7
2. EAST WALL TO BE PAINTED GYPSUM BOARD WITH CORRUGATED FRP PANEL ALONG LENGTH OF WALL, FROM FINISHED FLOOR LEVEL TO HEIGHT OF 10'–0" ABOVE FINISHED FLOOR

PUMP STATION DOOR SCHEDULE

ROOM NAME	NUMBER	EXT (*)	DOOR SIZE		DOOR				FRAME			DETAIL			FIRE RATING (MIN)	HDW SET	NOTE NO.
			WD	HGT	TYPE	MATL	FIN	GLASS	TYPE	MATL	FIN	HEAD	JAMB	THRESHOLD			
PUMP ROOM	DA–100A	*	12'–0"	12'–0"	C	STL	––	––	––	STL	––	G/AD–2	H/AD–2	B/AD–2	0	––	––
PUMP ROOM	DA–100B	*	12'–0"	12'–0"	C	STL	––	––	––	STL	––	G/AD–2	H/AD–2	B/AD–2	0	––	––
PUMP ROOM	DA–100C	*	3'–0"	7'–0"	A	FRP	SPEC	––	A	ALUM	SPEC	C/AD–2	D/AD–2	A/AD–2	0	HW1	––
PUMP ROOM	DA–100D	*	3'–0"	7'–0"	A	FRP	SPEC	––	A	ALUM	SPEC	C/AD–2	D/AD–2	A/AD–2	0	HW1	––
PUMP ROOM	DA–100E	*	3'–0"	7'–0"	A	FRP	SPEC	––	A	ALUM	SPEC	C/AD–2	D/AD–2	A/AD–2	0	HW1	––
ELECTRICAL ROOM	DA–101A	*	3'–0"	7'–0"	A	FRP	SPEC	––	A	ALUM	SPEC	M/AD–2	N/AD–2	A/AD–2	0	HW1	––
ELECTRICAL ROOM	DA–101B	––	PR 3'–0"	7'–10"	A	FRP	SPEC	––	A	FRP	SPEC	E/AD–2	F/AD–2	A/AD–2	90	HW3	––
TOILET ROOM	DA–102A	––	3'–0"	7'–0"	A	FRP	SPEC	––	A	ALUM	SPEC	E/AD–2	F/AD–2	P/AD–2	0	HW2	1

NOTES:

1. PROVIDE MINIMUM 1/2" UNDERCUT

PUMP STATION LOUVER SCHEDULE

ROOM NAME	NUMBER	ROUGH OPENING		DEPTH	TYPE	DESCRIPTION	DETAIL			NOTE NO.
		WD	HGT				HEAD	JAMB	SILL	
PUMP ROOM	LA–100A	9'–0"	4'–0"	6"	A	WIND DRIVEN RAIN LOUVER	J/AD–2	K/AD–2	L/AD–2	––
PUMP ROOM	LA–100B	9'–0"	4'–0"	6"	A	WIND DRIVEN RAIN LOUVER	J/AD–2	K/AD–2	L/AD–2	––
PUMP ROOM	LA–100C	4'–10"	4'–10"	6"	A	WIND DRIVEN RAIN LOUVER	J/AD–2	K/AD–2	L/AD–2	––
PUMP ROOM	LA–100D	4'–10"	4'–10"	6"	A	WIND DRIVEN RAIN LOUVER	J/AD–2	K/AD–2	L/AD–2	––
PUMP ROOM	LA–100E	4'–10"	4'–10"	6"	A	WIND DRIVEN RAIN LOUVER	J/AD–2	K/AD–2	L/AD–2	––

GENERAL NOTES

SEE SHEET A–1 FOR ADDITIONAL GENERAL NOTES

SEE STRUCTURAL DRAWINGS FOR COMPONENT AND CLADDING WIND PRESSURE REQUIREMENTS

DOOR TYPES

NTS

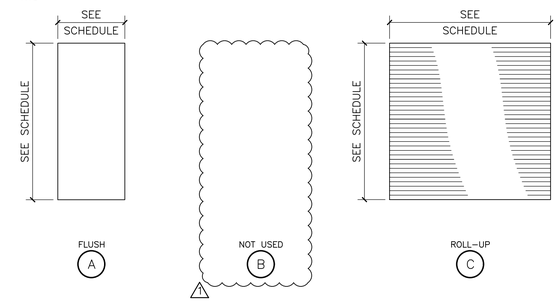

FRAME TYPES

NTS

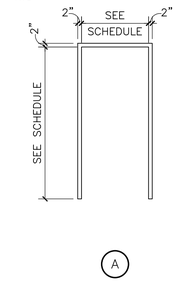

APPROVED PRODUCTS LIST

PRODUCT NAME	MANUFACTURER	MODEL	FL PRODUCT APPROVAL	APPROVAL NUMBER	DESIGN PRESSURE	IMPACT RATED
SINGLE WIDTH FRP DOOR AND ALUMINUM FRAME	CURRIES	FRP WITH ALUMINUM FRAME	Y	8394.5	–100/+100	Y
INSULATED OVERHEAD ROLL–UP DOOR	COOKSON	TYPE B HVHZ (FMWI)	Y	2211.4	–193.5/–203.5	Y
WIND DRIVEN RAIN LOUVERS	RUSKIN	EME6625D	Y	3286.1	–140/+140	Y
METAL WALL PANEL	BUTLER	BULTERIB II	Y	12493.1	*	N
METAL ROOF PANELS	BUTLER	BUTLERIB II	Y	12492.1	*	N

* ALLOWABLE PRESSURE IS DEPENDENT ON MANUFACTURER DESIGN AND SPACING OF WALL GIRT OR ROOF PURLIN. ACCEPTABLE PRESSURES WILL BE INCLUDED IN MANUFACTURERS SIGNED AND SEALED DRAWINGS AND CALCULATIONS.

NOTE: APPROVED PRODUCTS LIST IS A LISTING OF THE DESIGN BASIS PRODUCTS AND THE APPLICABLE APPROVED FLORIDA STATE PRODUCT DATA/TESTING. CONTRACTOR CAN SUBMIT "OR EQUAL" PRODUCTS BUT IS RESPONSIBLE FOR PRODUCT APPROVAL AND COORDINATION OF THAT INFORMATION WITH BUILDING DEPARTMENT.

LOUVER DETAILS

NTS

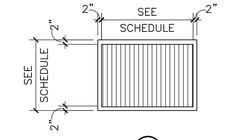

PARTITION TYPES

NTS

NOTE: SEE TYPICAL WALL SECTIONS FOR ADDITIONAL INFORMATION PARTITION TAGS SHOWN ON THE DRAWINGS INDICATE PARTITION TYPE FOR FULL LENGTH OF WALL (UNLESS OTHERWISE NOTED) SEE FINISH SCHEDULE FOR INTERIOR FINISHES FOR ALL WALLS THAT INCLUDE GYPSUM BOARD AS PART OF THE ASSEMBLY: BOTTOM OF GYP BD SHALL NOT BE IN CONTACT WITH FLOOR SLAB, INSTALL SUCH THAT THERE IS A 1/4" GAP BETWEEN SLAB AND BOTTOM OF GYP BD UNLESS OTHERWISE NOTED.

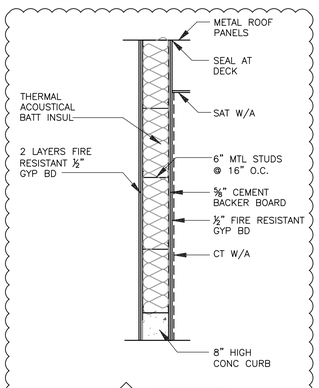

1 — 2 HR FIRE RATED WALL UL U443 6" MR STUDS @ 16" O.C.

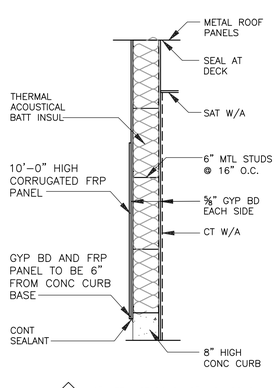

2 — 6" METAL STUDS ON 8" HIGH CONC CURB @ 16" O.C. WITH ⅝" GYP BOARD EACH SIDE (CEMENT BOARD AT CT WALLS). WITH 10'–0" HIGH CORRUGATED FRP PANEL OVER ⅝" GYP BD PUMP ROOM SIDE ONLY.

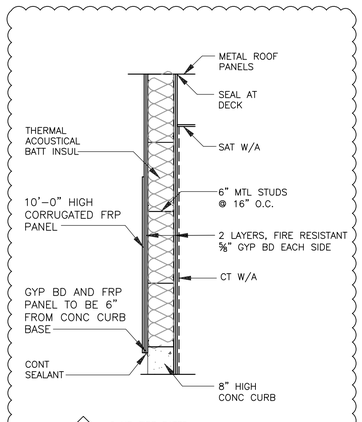

2A — 2 HR FIRE RATED WALL UL U419 6" MR STUDS @ 16" O.C.

BASE AND FLOOR FINISH DETAILS

NTS

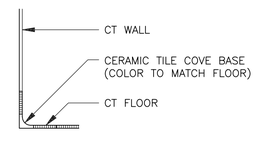

A — CERAMIC TILE BASE

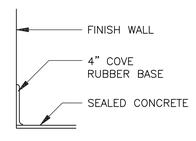

B — RUBBER BASE

MANUFACTURERS:
BURKE MERCER FLOORING, ROPPE CORPORATION, OR APPROVED EQUAL.

MATERIAL REQUIREMENTS:
TYPE TS (RUBBER, VULCANIZED THERMOSET), GROUP I (SOLID, HOMOGENEOUS).
MINIMUM THICKNESS: 0.125–INCH.
LENGTH: 48–INCHES LONG.
INSIDE CORNERS: PREFORMED.
FINISH: MATTE.
COLOR: TO BE SELECTED BY ENGINEER FROM MANUFACTURER'S FULL RANGE.

CDM Smith
8381 Dix Ellis Trail, Suite 400
Jacksonville, FL 32258
Tel: (904) 731-7109
FL COA No. EB-0000020

FL CORP. ARCHITECTURE
LEAD ARCHITECT:
101 SOUTHHALL LANE,
SUITE 200,
MAITLAND, FL 32751

DESIGN ENGINEER / ARCHITECT
MICHAEL T. ALFORD
FLORIDA REGISTRATION NO.
AR92055

NO.	BY	DATE	REVISIONS
6	X	X	X
5	X	X	X
4	X	X	X
3	X	X	X
2	X	X	X
1	MTA	6/18	FM GLOBAL

DESIGNED BY: D. CHATER
DRAWN BY: D. CHATER
DATE: JANUARY 2018
CHECKED BY: M. ALFORD
DATE: JANUARY 2018

JEA Building Community

JEA, BRADLEY ROAD
WASTEWATER BOOSTER PUMP STATION
ARCHITECTURAL SCHEDULES AND TYPES

PROJ. NO. 6103-108860
DATE: JANUARY 2018
SCALE: NTS

NO. SHEETS 47
SHEET NO. 20
DRAWING NO. AD-1

ISSUED FOR BID

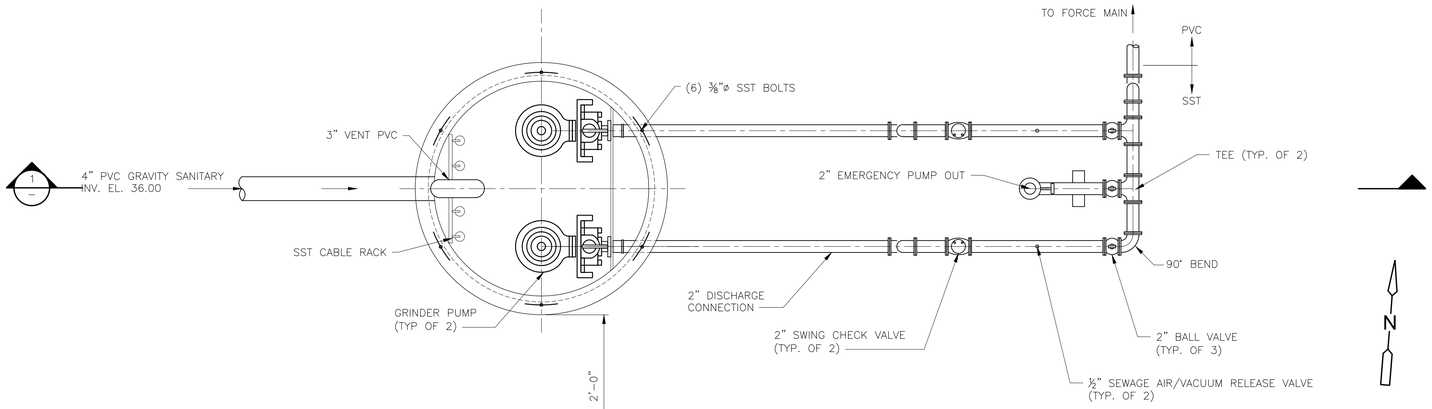

PUMP:

FLYGT MODEL M3085
44 GPM @ 37' TDH
3ø 460V

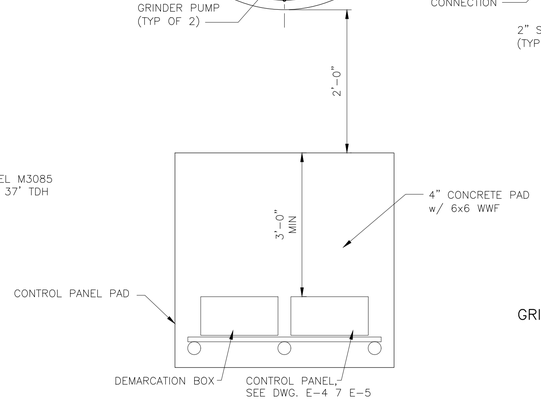

GRINDER PUMP STATION WET WELL AND VALVE ASSEMBLY

PLAN

1" = 1'-0"

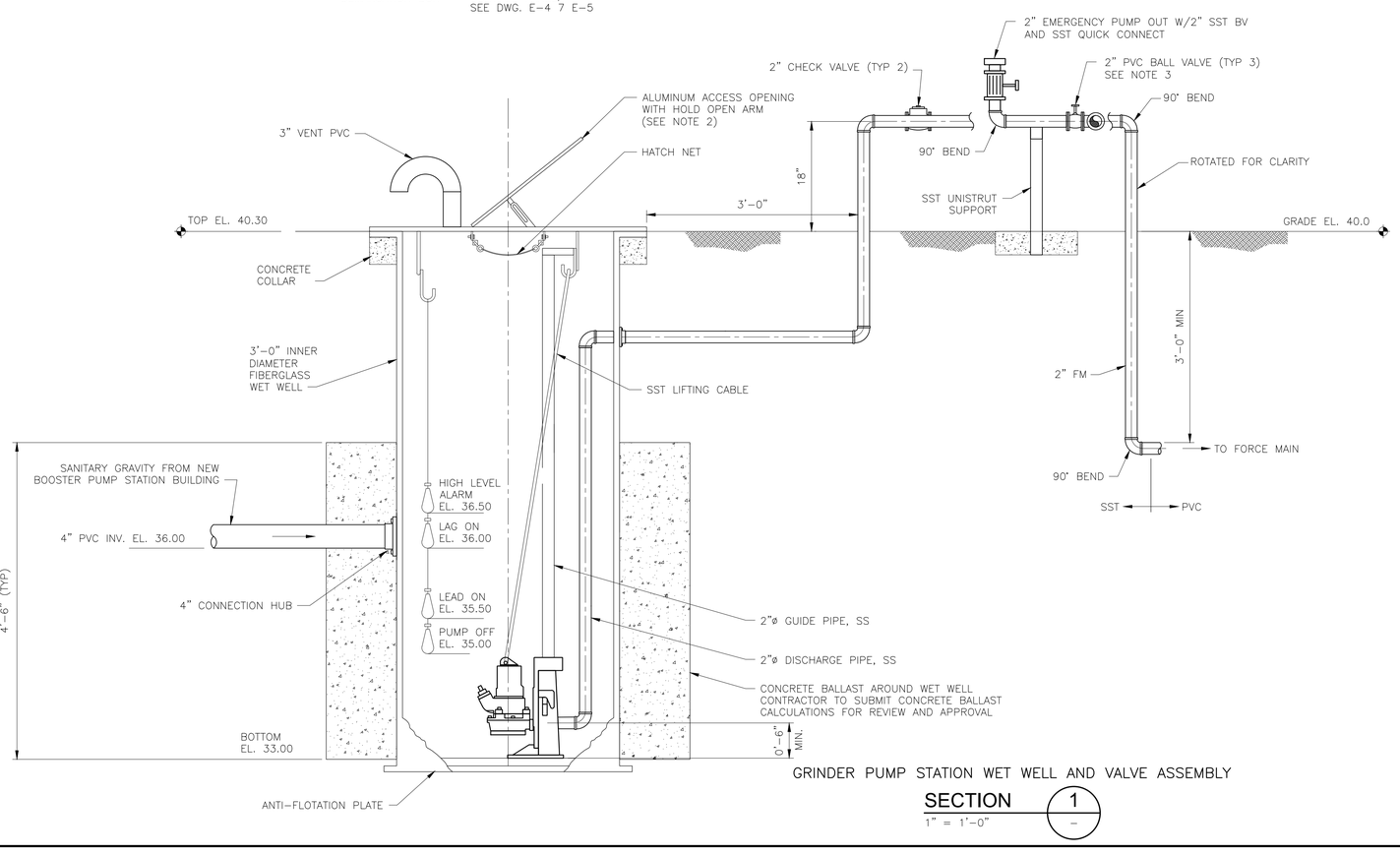

GRINDER PUMP STATION WET WELL AND VALVE ASSEMBLY

SECTION 1

1" = 1'-0"

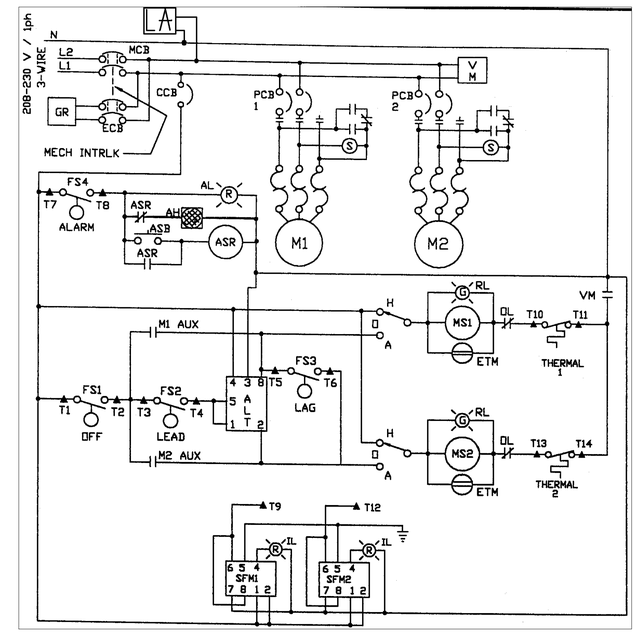

LEGEND

MCB	MAIN CIRCUIT BREAKER	RL	RUN LIGHT
ECB	EMERGENCY CIRCUIT BREAKER	IL	INDICATOR LIGHT
PCB1,2	PUMP CIRCUIT BREAKER	SFM1,2	SEAL FAIL MODULES
CCB	CONTROL CIRCUIT BREAKER	ASR	ALARM SILENT RELAY
MS1,2	STARTER	ASB	ALARM SILENT BUTTON
OL	HEATER	AH	ALARM HORN
ETM	ELAPSE TIME METER	VM	VOLTAGE METER
ALT	ALTERNATOR	GR	GENERATOR RECEPTACLE
AL	ALARM LIGHT	HOA	HAND OFF AUTO SWITCH

START PACK: RUN CAP, START CAP, START RELAY

NOTES:

1. ACCESS DOOR IS NOT SHOWN ON THE GRINDER PUMP STATION PLAN VIEW FOR CLARITY.
2. CONTRACTOR SHALL COORDINATE ACCESS HATCH SIZE WITH THE GRINDER PUMP STATION SUPPLIER SO THE PUMPS CAN BE REMOVED FROM THE WET WELL FOR MAINTENANCE AND CABLE RACK CAN BE ACCESSED.
3. PROVIDE COUPLINGS ON VALVE ASSEMBLY PIPING FOR REMOVAL OF VALVES.

CDM Smith
8381 Dix Ellis Trail, Suite 400
Jacksonville, FL 32256
Tel: (904) 731-7109
FL COA No. EB-0000020

Construction & Engineering Services Consultants, Inc.
9432 Baymeadows Road, Suite 100
Jacksonville, FL 32256
Tel: (904) 363-1825
Business Number CA 27598
C&ES CONSULTANTS, INC.

NO.	BY	DATE	REVISIONS
6.			
5.			
4.			
3.			
2.			
1.			

DESIGNER: SYM
DRAWN BY: BYP
DATE: JANUARY 2018
CHECKED BY: WJF
DATE: JANUARY 2018

DESIGN ENGINEER
STEPHEN V. MANIS
FLORIDA REGISTRATION NO.
43342

JEA Building Community

JEA, BRADLEY ROAD
WASTEWATER BOOSTER PUMP STATION
SANITARY GRINDER PUMP STATION

PROJ. NO. 6103-108860
DATE: JANUARY 2018
SCALE: NOTED

NO. SHEETS 32
SHEET NO. 32
DRAWING NO. M-5

ISSUED FOR BID

MAINTENANCE OF TRAFFIC GENERAL NOTES

1. ALL MOT SHALL BE IN CONFORMANCE WITH COJ AND MUTCD STANDARDS.
2. CONTRACTOR SHALL NOTIFY THE CITY TRAFFIC ENGINEERING DIVISION (387-8861) A MINIMUM OF 5 WORKING DAYS PRIOR TO IMPLEMENTATION OF THE MOT.
3. PRIOR TO COMMENCING WORK, THE CONTRACTOR SHALL FURNISH, ERECT AND MAINTAIN ALL BARRICADES, WARNING SIGNS, AND MARKINGS FOR HAZARDS AND THE CONTROL OF TRAFFIC, IN REASONABLE CONFORMITY WITH THE U.S. DEPARTMENT OF TRANSPORTATION MANUAL OF UNIFORM TRAFFIC CONTROL DEVICES FOR STREETS AND HIGHWAYS, OR AS DIRECTED BY THE OWNER SUCH AS TO EFFECTIVELY PREVENT ACCIDENTS IN ALL PLACES WHERE THE WORK CAUSES OBSTRUCTION TO THE NORMAL TRAFFIC OR CONSTITUTES IN ANY WAY A HAZARD TO THE PUBLIC.
4. THE CONTRACTOR SHALL PROVIDE THE JEA WITH THE NAME OF THE PERSON ON THE CONTRACTOR'S STAFF DESIGNATED TO BE RESPONSIBLE FOR THE IMPLEMENTATION OF ALL PHASES OF MOT PRIOR TO THE BEGINNING OF CONSTRUCTION.
5. CONFLICTING OR MISLEADING PAVEMENT MARKINGS SHALL BE REMOVED BY HYDRO-BLASTING OR OTHER METHODS AS APPROVED BY CITY TRAFFIC WHEN IN THE CITY R/W. ALL EXISTING PAVEMENT MARKINGS OUTSIDE THE LIMITS OF CONSTRUCTION WHICH ARE REMOVED FOR MOT PURPOSES SHALL BE REPLACED BEFORE COMPLETION OF THE PROJECT.
6. THE REFLECTIVE SHEETING ON SIGNS, CONES AND BARRICADES SCRATCHED OR DAMAGED TO THE POINT THAT REFLECTIVITY IS IMPAIRED SHALL BE REPLACED. DAMAGED, DEFACED OR DIRTY SIGNS, CONES OR BARRICADES SHALL IMMEDIATELY BE REPAIRED, REPLACED OR CLEANED BY THE CONTRACTOR.
7. THE CONTRACTOR SHALL BE RESPONSIBLE FOR PERFORMING FORMAL MOT INSPECTIONS AND SHALL IMMEDIATELY REPLACE ALL EQUIPMENT AND DEVICES NOT CONFORMING TO CITY STANDARDS. THESE INSPECTIONS SHALL TAKE PLACE AT LEAST ONCE A WEEK. SOME OF THESE INSPECTIONS SHALL BE CONDUCTED AT NIGHT. THE JEA SHALL BE ADVISED OF THE SCHEDULE OF THE INSPECTIONS AND BE GIVEN THE OPPORTUNITY TO JOIN IN THE INSPECTION.
8. SHORT TERM STOPPING OR PARKING OF A VEHICLE, OR PLACING ANYTHING ELSE NEXT TO THE WORK AREA (FOR EXAMPLE, A STACK OF CONES, PARKED CONSTRUCTION EQUIPMENT/VEHICLES, ETC.) CREATES A CHANNEL EFFECT WHICH CAN ADVERSELY AFFECT TRAFFIC FLOW. THEREFORE, ALL CONSTRUCTION EQUIPMENT SHALL BE PLACED A MINIMUM OF 15 FEET FROM THE TRAVEL LANE WHEN NOT IN USE. OVERNIGHT STORAGE WILL BE IN AN APPROPRIATELY SIGNED AND BARRICADED AREA.
9. ALL DROP OFFS ALONG CONSTRUCTION WORK ZONES SHALL BE HANDLED AS PER FDOT INDEX 600 CURRENT EDITION.
10. TRAFFIC CONDITIONS, ACCIDENTS AND OTHER EMERGENCY CONDITIONS MAY REQUIRE THE OWNER TO MODIFY ANY CHANNELIZATION SHOWN IN THESE PLANS. THE CONTRACTOR SHALL MAKE THE NECESSARY ADJUSTMENTS, AS DIRECTED BY THE OWNER, WITHOUT DELAY.
11. WARNING LIGHTS SHALL BE USED TO MARK BARRICADES AT NIGHT AS NEEDED.
12. DUST CONTROL MEASURES SHALL BE IMPLEMENTED ON ALL UNPAVED SURFACES UNTIL PAVED OR SODDED.
13. TEMPORARY PAVEMENT IF REQUIRED SHALL CONSIST OF 1" OF TYPE S-III ASPHALT ON 6" OF LIMEROCK.
14. ROADWAYS MUST BE PAVED PRIOR TO OPENING TO TRAFFIC.
15. THE CONTRACTOR SHALL RETURN THE GROUND TO ITS ORIGINAL CONDITION OR PROPOSED FINAL GRADE, WHEN REMOVING ANY TEMPORARY PAVEMENT.
16. THE CONTRACTOR SHALL, AS REQUIRED, PROVIDE TEMPORARY DRAINAGE DURING CONSTRUCTION. IF NEEDED, A TEMPORARY DRAINAGE PLAN SHALL BE PREPARED AND SUBMITTED FOR APPROVAL TO THE FDOT MAINTENANCE PERMITS DEPARTMENT AND CITY PRIOR TO CONSTRUCTION.

MAINTENANCE OF TRAFFIC PLAN CHANGES

1. ANY MODIFICATIONS TO THESE MAINTENANCE OF TRAFFIC PLANS SHALL BE SUBMITTED TO THE CITY OF JACKSONVILLE TRAFFIC ENGINEERING DIVISION FOR REVIEW AND APPROVAL PRIOR TO IMPLEMENTATION.
2. THE CONTRACTOR HAS THE OPTION TO SUBMIT ALTERNATIVE TRAFFIC CONTROL PLANS FOR APPROVAL BY THE CITY OF JACKSONVILLE TRAFFIC ENGINEERING DIVISION. ALTERNATE TRAFFIC CONTROL PLANS SHALL BE SIGNED AND SEALED BY A PROFESSIONAL ENGINEER REGISTERED IN THE STATE OF FLORIDA AND SHALL BE CONSISTENT WITH STANDARD MOT DESIGN PRACTICES. NO CONSTRUCTION ACTIVITY WILL BE ALLOWED UNTIL THE CONTRACTOR'S MOT PLANS ARE APPROVED IN WRITING.

MAINTENANCE OF TRAFFIC SIGNING NOTES

1. THE CONTRACTOR SHALL INSURE THAT PERMANENT SIGNS DO NOT CONFLICT WITH MOT SIGNS. THE CONTRACTOR SHALL COVER ALL SIGNS, BOTH PERMANENT AND TEMPORARY, THAT CONFLICT WITH TRAFFIC CONTROL DURING CONSTRUCTION OPERATIONS.
2. THE EXISTING POSTED SPEED LIMIT SIGNS SHALL REMAIN THROUGHOUT ALL PHASES UNLESS OTHERWISE NOTED.
3. ANY EXISTING STREET AND ROAD NAME SIGNS THAT ARE IMPACTED BY CONSTRUCTION ARE TO BE TEMPORARILY RELOCATED AND KEPT VISIBLE AT ALL TIMES FOR THE FACILITATION OF ACCESS BY EMERGENCY VEHICLE TRAFFIC.
4. CONTRACTOR MUST MAINTAIN EXISTING SIGNING DURING ALL CONSTRUCTION. IF SIGNS ARE DAMAGED DUE TO HIS ACTIVITY, THE CONTRACTOR IS REQUIRED TO REPLACE THEM PROMPTLY IN ACCORDANCE WITH CURRENT CITY STANDARD SPECIFICATIONS AT NO ADDITIONAL COST TO JEA.

MAINTENANCE OF TRAFFIC REQUIREMENTS

1. PROJECT WORK HOURS ARE BETWEEN 8:00 A.M. AND DUSK UNLESS NOTED OTHERWISE.
2. ACCESS FOR LOCAL TRAFFIC WITH DESTINATIONS WITHIN THE WORK ZONE SHALL BE MAINTAINED UNLESS OTHERWISE NOTED.
3. ACCESS TO ALL INTERSECTING SIDE STREETS AND DRIVEWAYS SHALL BE MAINTAINED AT ALL TIMES UNLESS OTHERWISE NOTED.
4. ALL ROAD CLOSED AND EXIT CLOSED SIGNS SHALL BE MOUNTED ON TYPE III BARRICADES.

PEDESTRIAN ACCESS REQUIREMENTS

1. IT IS ANTICIPATED THAT ALL EXISTING SIDEWALKS WILL REMAIN OPEN AND ACCESSIBLE DURING CONSTRUCTION.
2. COSTS FOR PEDESTRIAN ACCESS SHALL BE INCLUDED IN THE LUMP SUM PRICE BID FOR MAINTENANCE OF TRAFFIC.
3. IF SIDEWALKS ARE DISTURBED AND HAVE TO BE REPLACED, HANDICAP RAMPS WITH ADA MATS PER FDOT INDEX 304.

MOT LEGEND

- WORK AREA
- CHANNELIZING DEVICE (DRUM, WITH WARNING LIGHT)
- CHANNELIZING DEVICE (CONE)
- TYPE III BARRICADE (WITH WARNING LIGHT)
- SIGN WITH 18"x18" (MIN.) ORANGE FLAG AND TYPE B LIGHT
- ADVANCE WARNING ARROW PANEL
- ROADWAY TRAFFIC FLOW
- DRIVEWAY TRAFFIC FLOW
- WORK ZONE SIGN
- FLAGGER

SPECIAL FLAGGER CONTROL NOTES

1. THE CONTRACTORS SELECTION OF MEANS, METHODS, TECHNIQUES AND SEQUENCE OF CONSTRUCTION MAY REQUIRE PERIODIC FLAGGER CONTROL.
2. IT MAY BE ADVISABLE TO EMPLOY FLAGGERS FOR THE SAFETY OF THE MOTORING PUBLIC WHEN MOVING EQUIPMENT AND HANDLING MATERIAL.
3. IT WILL BE INCUMBENT UPON THE CONTRACTOR TO DETERMINE WHEN HIS OR HER OPERATIONS REQUIRE FLAGGER CONTROL.

PORTABLE CHANGEABLE MESSAGE SIGNS (PCMS)

1. AS SHOWN WITHIN THESE MOT DRAWINGS, SIX (6) PCMS's WILL BE REQUIRED. THE PCMS's SHALL BE IN PLACE ONE (1) WEEK (7 DAYS) IN ADVANCE OF THE MOT SET-UP.
2. SEE DRAWING MOT-2 FOR PCMS LOCATIONS AND TEXT.

MAINTENANCE OF TRAFFIC DRAWING INDEX

CDM Smith
8381 Dix Ellis Trail, Suite 400
Jacksonville, FL 32256
Tel: (904) 731-7100
FL COA No. EB-0000020

Construction & Engineering Services Consultants, Inc.
9432 Baymeadows Road, Suite 100
Jacksonville, FL 32256
Tel: (904) 652-1185
Business Number CA 27598
C&ES CONSULTANTS, INC.

NO.	BY	DATE	REVISIONS
6.			
5.			
4.			
3.			
2.			
1.			

DESIGNER: SVM
DRAWN BY: BTP
DATE: JANUARY 2018
CHECKED BY: ECS
DATE: JANUARY 2018
DESIGN ENGINEER: STEPHEN V. MANIS
FLORIDA REGISTRATION NO. 43342

JEA Building Community sm

JEA, BRADLEY ROAD
WASTEWATER BOOSTER PUMP STATION
MAINTENANCE OF TRAFFIC - NOTES

PROJ. NO. 6103-108860
DATE: JANUARY 2018
SCALE: NTS

NO. SHEETS -
SHEET NO. -
DRAWING NO. MOT-1

ISSUED FOR BID

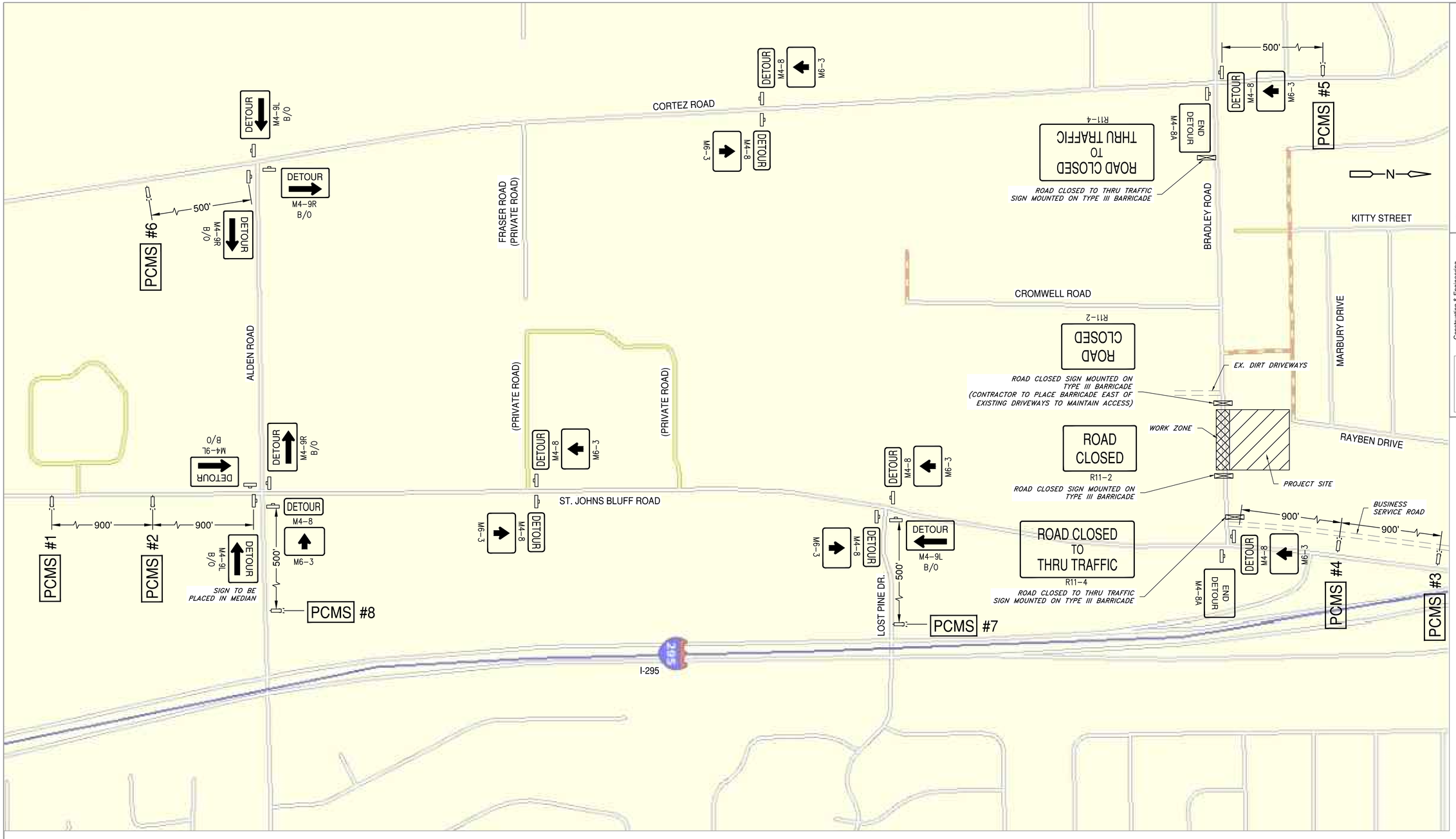

PORTABLE CHANGEABLE (VARIABLE) MESSAGE SIGN #1 AND #3

MESSAGE 1
BRADLEY
ROAD
CLOSED

MESSAGE 2
TO THRU
TRAFFIC

MESSAGE 1 WILL RUN 3 SECONDS.
MESSAGE 2 WILL RUN 3 SECONDS.

PORTABLE CHANGEABLE (VARIABLE) MESSAGE SIGN #2 AND #4

MESSAGE 1
FOLLOW
DETOUR
AHEAD

MESSAGE 2
ALDEN RD
TO
CORTEZ RD

MESSAGE 1 WILL RUN 3 SECONDS.
MESSAGE 2 WILL RUN 3 SECONDS.

PORTABLE CHANGEABLE (VARIABLE) MESSAGE SIGN #5, #6, #7 AND #8

MESSAGE 1
BRADLEY
CLOSED
TO THRU

MESSAGE 2
TRAFFIC
DETOUR
TO ALDEN

MESSAGE 1 WILL RUN 3 SECONDS.
MESSAGE 2 WILL RUN 3 SECONDS.

CDM Smith
8381 Dix Ellis Trail, Suite 400
Jacksonville, FL 32256
Tel: (904) 731-7100
FL COA No. EB-0000020

NO.	BY	DATE	REVISIONS
6.			
5.			
4.			
3.			
2.			
1.			

C&ES CONSULTANTS, INC.
Construction & Engineering Services Consultants, Inc.
9432 Baymeadows Road, Suite 100
Jacksonville, FL 32256
Tel: (904) 652-1186
Business Number CA 27598

DESIGNER: SVM
DRAWN BY: BTP
DATE: JANUARY 2018
CHECKED BY: ECS
DATE: JANUARY 2018
DESIGN ENGINEER: STEPHEN V. MANIS
FLORIDA REGISTRATION NO. 43342

JEA Building Community sm

JEA, BRADLEY ROAD WASTEWATER BOOSTER PUMP STATION MAINTENANCE OF TRAFFIC - DETOUR PLAN

PROJ. NO. 6103-108860
DATE: JANUARY 2018
SCALE: NTS
NO. SHEETS -
SHEET NO. -
DRAWING NO. MOT-2

ISSUED FOR BID

pw:\\dscpwcap1:PW_XM1\Documents\6103\108860\02 Project Information\03 Data\50 CADD Graphics\Z:\Projects\15012 JEA Bradley Road PS\dwg\CDM Files\Civil\CD002MOT.dwg Current Layout Tab = CD-5 Fri Jun 01, 2018 - 10:30

Plan Review

JEA
"Saint John's Bluff Master"
10477 Bradley Road
Jacksonville, FL 32246-8752
USA

Index-Rec No: 000523.37-01
Account No: 01-30626
Date of Review: April 03, 2018
Review No: 268242

Plans Submitted By: David A. Rasmussen, CDM Smith Inc.

Subject: Pre-Engineered Metal Building

Executive Summary:

This submittal is in accordance with FM Global Standards.

Please see Review Comment No. 1.

Scope of Review:

This confirms the receipt and review of:

- Drawings A-1 thru A-7, AD-1 thru AD-3
- Cover Letter and Specifications

The submittal indicates a new 5,656 sq. ft., (approx. 56 ft. x 101 ft.) one story, pre-engineered all metal building. It will have a height of 19 ft. and will slope at a rate of 1 in. for every foot.

The following design criteria was used to provide the design specifications:

- 115 mph Wind Speed (ASCE 7-05)
- 1.15 Wind Importance Factor (for cladding)
- Ground Roughness "C"
- Partially Enclosed Building

The roof system should be designed to the following pressures:

Roof Area	Wind Ratings
Field	1-105
Perimeter (8 ft.)	1-150
Corner (8 ft. x 8 ft.)	1-210

Review Comments:

1. Once the roofing/building contract is awarded, scope of work and material list should be submitted from the contractor. The new roof should be FM Approved with an FM 1-105 wind rating for the field of the roof. FM 1-150 wind rating in the perimeters, and FM 1-210 wind rating for the corners.

Please have the installing contractor complete and submit *Checklist for Roofing System* (FM Global Form X2688) as well as a Contractor's Package from RoofNav for each roof area to FM Global for review and acceptance prior to installation. RoofNav can be accessed at www.RoofNav.com.

Please note there should be no component substitutions or deviations from the proposed RoofNav assembly. Use of individually FM Approved components, not FM Approved for use together does not constitute an FM Approved or recommended assembly. All FM Approved materials are *required* to have the FM APPROVAL mark on the packaging or the material itself. Materials without proper labeling are not FM Approved. If alternatives are desired, a different RoofNav assembly should be chosen and submitted for review.

Recommendations to Reduce Hazards during Installation:

2. Hot work of any kind should be avoided. If there is a practical and safer way to do the job without hot work, the alternative method should be used. If hot work is unavoidable, precautions such as those outlined on the FM Global Hot Work Permit System should be taken during any such work.

This review is for property insurance purposes only in accordance with FM Global standards and guidelines. Nothing should be inferred from this review regarding compliance with any rules, regulations or requirements of government agencies, state or local codes or any other jurisdictional authority. We are retaining the copy of your submitted plans for our files.

Sincerely,

David B. Cox
Senior Engineering Specialist
david.cox@FMGlobal.com
813-948-9878

Loss Prevention Resources:

FM Global Property Loss Prevention Data Sheets (http://www.fmglobaldatasheets.com)
FM Global Loss Prevention Training (https://fmglobaltraining.skillport.com)
Approval Guide (http://www.approvalguide.com)
RoofNav (http://roofnav.fmglobal.com)

Distribution:

David A. Rasmussen, CDM Smith Inc., rasmussenda@cdmsmith.com
Chris Crane, JEA, cranct@jea.com
John McCarthy, JEA, mccajp@jea.com
Mary Whitten, JEA, whitmj@jea.com
Matthew Poteet, JEA, potemd@jea.com
Steven Bossier, JEA, bosssm@jea.com
Charles Tronsberg, FM Global, Senior Account Engineer, charles.tronsberg@fmglobal.com
Clay Sanders, FM Global, Group Manager of Field Engineering, robert.sanders@fmglobal.com

Brian Phillips
JEA Senior project Administrator
Wastewater Plants and Pump Stations
Tower-4

July 11, 2016

ELECTRIC

WATER

SEWER

Re: **CIAC Charges for Installation of additional transformer @ Booster Station**

Dear Mr. Phillips,

As per the request for additional transformer, to serve the new pump station at 10477 Bradley Road, Jacksonville 32246 the total cost will amount to **$24,250.19** (Twenty four thousand two hundred fifty and 19/100 US Dollars.)
The construction will include the setting of new riser pole and the overhead road crossing by JEA.
Also included, the material cost for the underground primary conduit and the transformer concrete pad. These items will be furnished by JEA, installed by your contractor and inspected by JEA electric services.
The transformer and the primary cable will be installed and energized by JEA.
The new meter enclosure will be provided to your contractor for installation, per JEA rules and regulations. An electrical permit must be issued by the city of Jacksonville for the new service.
The old transformer and meter will remain as they are.

If you have any questions please let me know.

Thank you,
Respectfully,

Costa Theodoridis
JEA Electric Distribution Engineer
Commercial Electric Services
Ph: 904-665-6734.

godwin pumps

ENGINEERING CATALOG

CD250M Dri-Prime® Pump Engineering Data

AT BRADLEY RD

Pump	CD250M
Curve	CD250M DIESEL
Branch Sizes	10" x 10" (250mm x 250mm)
Speed	Variable

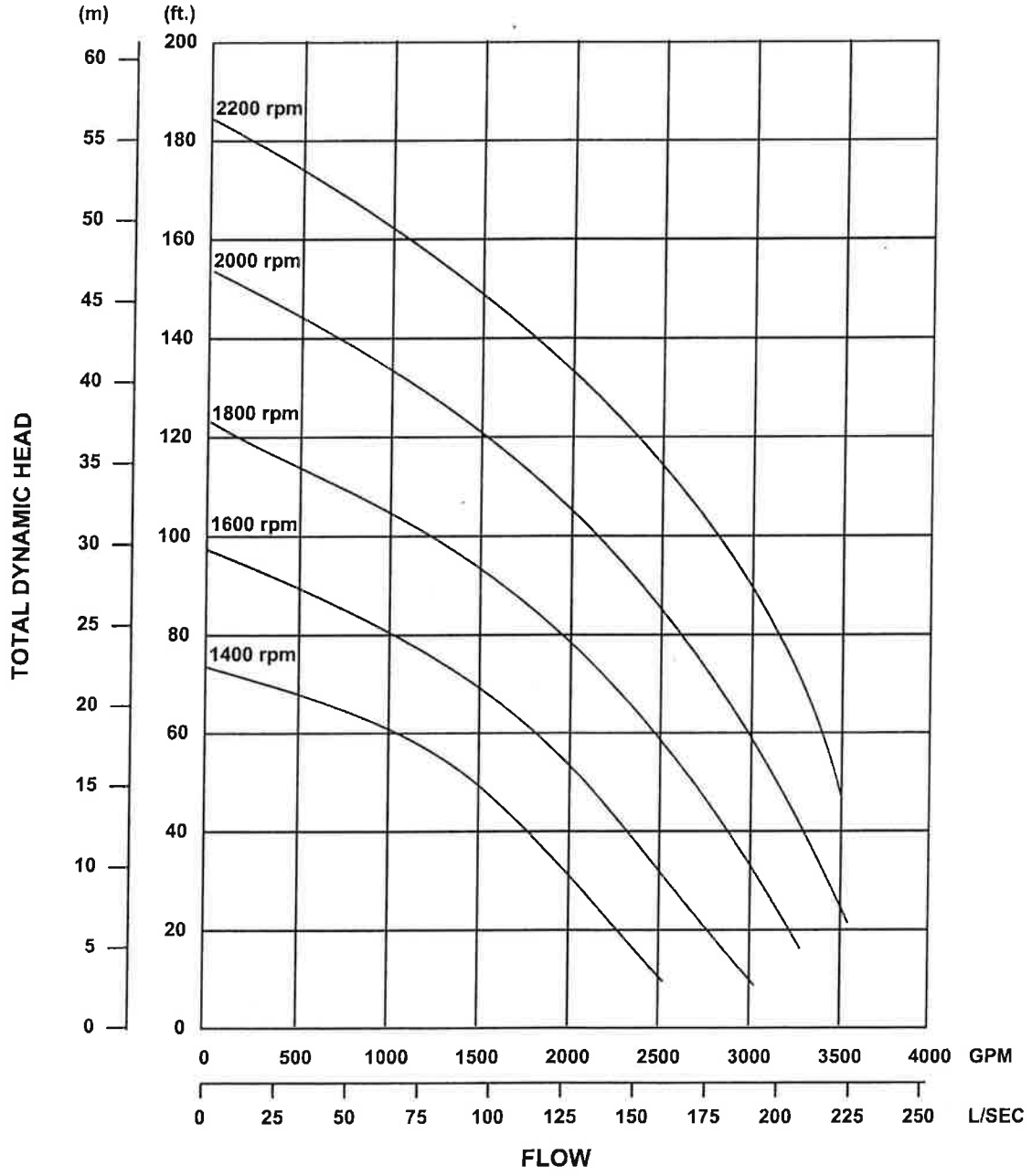

CD500M Dri-Prime® Pump

CD500M

Pump Type	CD500M
Curve No	95-1020-3098
Revision	5
Date	14 February 2011

Branch Sizes	500 / 600 x 450 mm
Speed	Variable
Max Solids Handling	3.1 "/ 80 mm
Max Impeller Diameter	24.0 "/ 610 mm
Min Impeller Diameter	22.6 "/ 575 mm

Performance

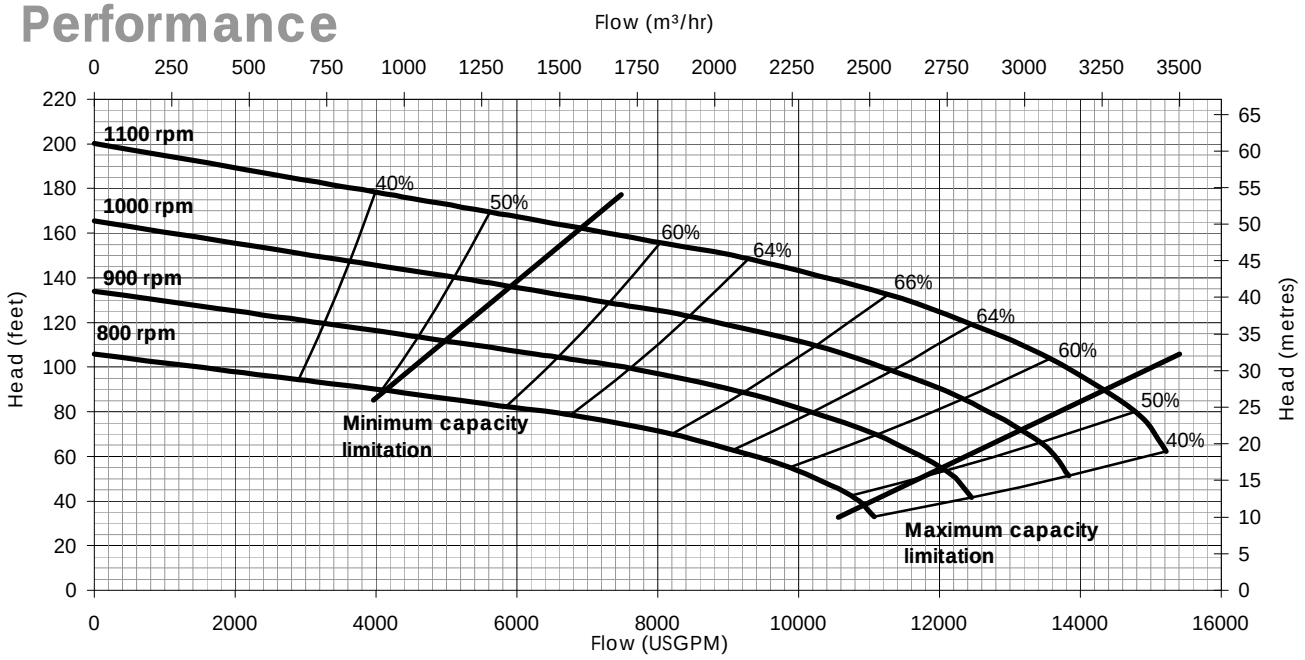

Power

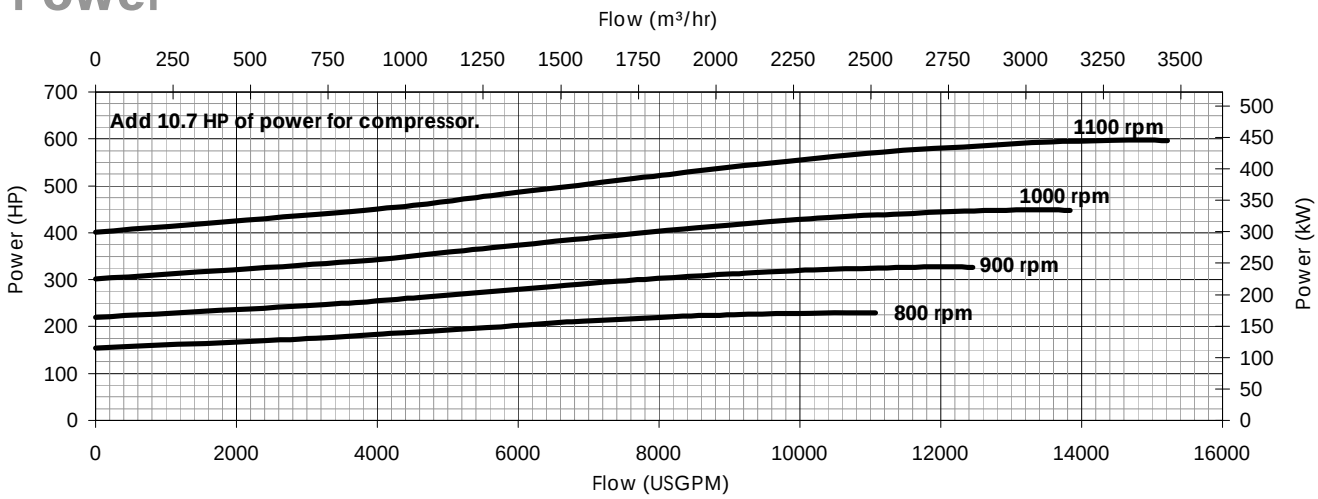

NPSH

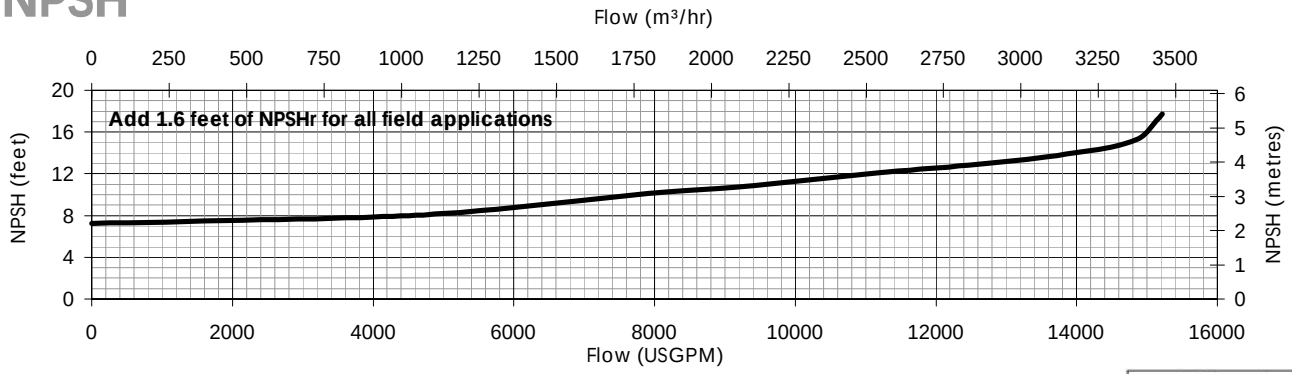

84 Floodgate Road, Bridgeport, NJ 08014 USA, (856) 467-3636 . Fax (856) 467-4841

Email: sales@godwinpumps.com, godwinpumps.com

Godwin Pumps is a direct wholly owned subsidiary of ITT Corporation.

Assessed to ISO 9001:2008
Certificate N° 1027

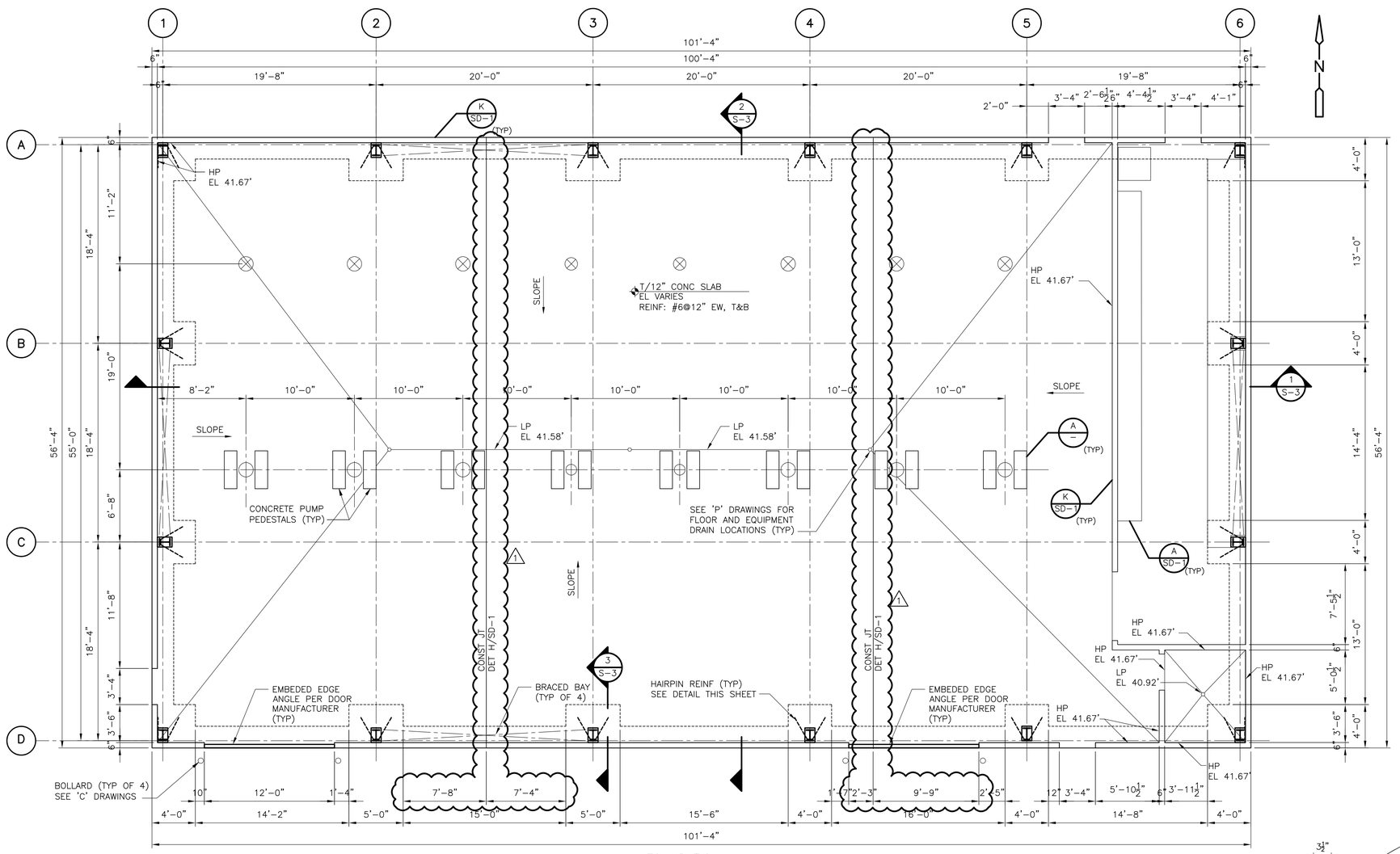

FOUNDATION

PLAN

3/16" = 1'-0"

NOTE:
FOUNDATION DESIGN IS PRELIMINARY UNTIL THE METAL BUILDING SUBMITTAL WITH THE COLUMN LOAD REACTIONS IS REVIEWED AND APPROVED BY THE ENGINEER. THE FOUNDATION WORK SHALL NOT BEGIN UNTIL THE BUILDING AND FOUNDATION REINFORCING SUBMITTALS HAVE BEEN APPROVED BY THE ENGINEER.

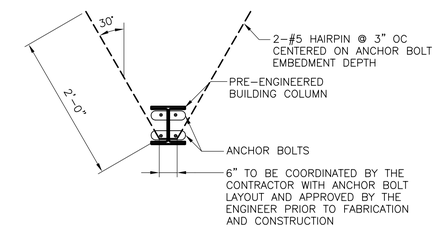

NOTE:

1. LOCATE HAIRPIN BEHIND ALL COLUMN ANCHOR BOLTS.

HAIRPIN (FOR LOCATION SEE PLAN)

ADDITIONAL SLAB REINFORCING @ PRE-ENGINEERED BUILDING COLUMNS

NTS

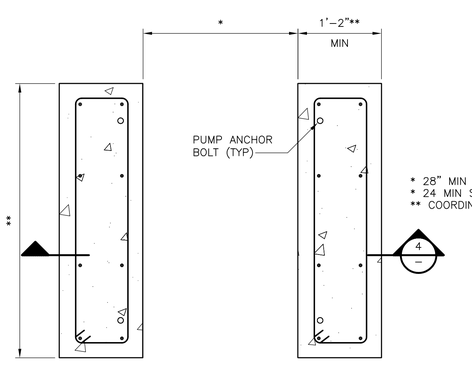

* 28" MIN SPACING FOR PRIMARY PUMPS
* 24 MIN SPACING FOR JOCKEY PUMPS
** COORDINATE WITH FINAL PUMP SELECTION

TYPICAL PUMP PEDESTALS

DETAIL A

1" = 1'-0"

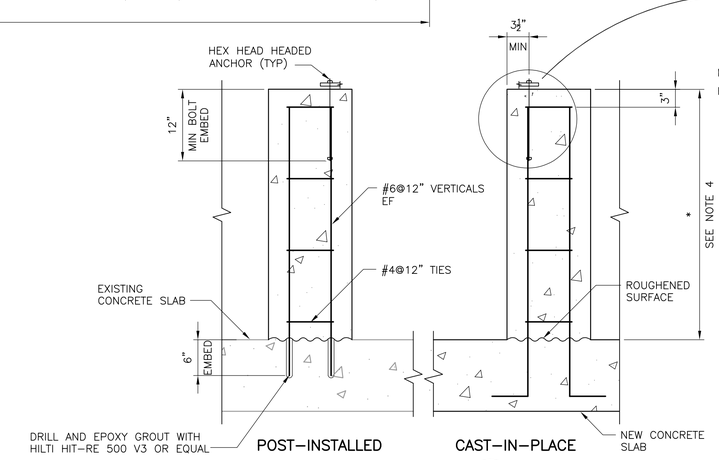

SECTION 4

1" = 1'-0"

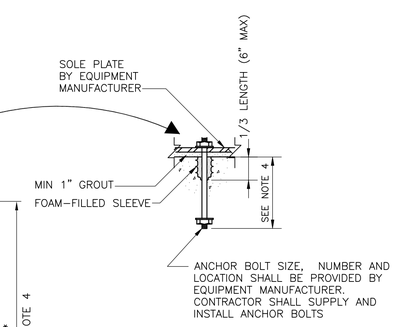

* 24" MAX HEIGHT FOR PRIMARY PUMPS
* 18" MAX HEIGHT FOR JOCKEY PUMPS

NOTES:

1. PUMP SHALL BE CENTERED BETWEEN THE TWO PEDESTALS
2. THE MINIMUM DISTANCE BETWEEN AN ANCHOR BOLT AND THE EDGE OF CONCRETE SHALL NOT BE LESS THAN 3.5"
3. PUMP SHALL BE LEVELED IN ACCORDANCE WITH MANUFACTURER REQUIREMENTS
4. COORDINATE DIMENSIONS WITH PUMP MANUFACTURER. PEDESTAL DESIGN AND ANCHOR BOLTS ARE PRELIMINARY PENDING FINAL PUMP SELECTION. FINAL PEDESTAL AND ANCHOR BOLTS WILL BE PROVIDED AFTER APPROVED PUMP SUBMITTALS HAVE BEEN RECEIVED.

ISSUED FOR BID

CDM Smith
8381 Dix Ellis Trail, Suite 400
Jacksonville, FL 32256
Tel: (904) 731-7109
FL COA No. EB-0000020

REVISIONS

NO.	BY	DATE	
6.	X	X	X
5.	X	X	X
4.	X	X	X
3.	X	X	X
2.	X	X	X
1.	WRM	6/18	ADDENDUM NO. XX

DESIGN ENGINEER
WILLIAM R. MAPLES, P.E.
FLORIDA REGISTRATION NO. 49311

DESIGNER:	E. RIVERA
DRAWN BY:	E. SCIAVO
DATE:	JANUARY 2018
CHECKED BY:	W. MAPLES
DATE:	JANUARY 2018

JEA Building Community

JEA, BRADLEY ROAD
WASTEWATER BOOSTER PUMP STATION
FOUNDATION PLAN

PROJ. NO.	6103-108860
DATE:	JANUARY 2018
SCALE:	AS SHOWN
NO. SHEETS OF	37
SHEET NO.	36
DRAWING NO.	S-2