CONSTRUCTION DRAWINGS
FOR
HOLIDAY ROAD MASTER PUMP STATION SPLITTER BOX REPLACEMENT

JEA PROJ NO.: 8006211

CITY OF JACKSONVILLE CDN: 4161.323

MITTAUER & ASSOCIATES, INC., PROJECT NO.: 0801-40-2

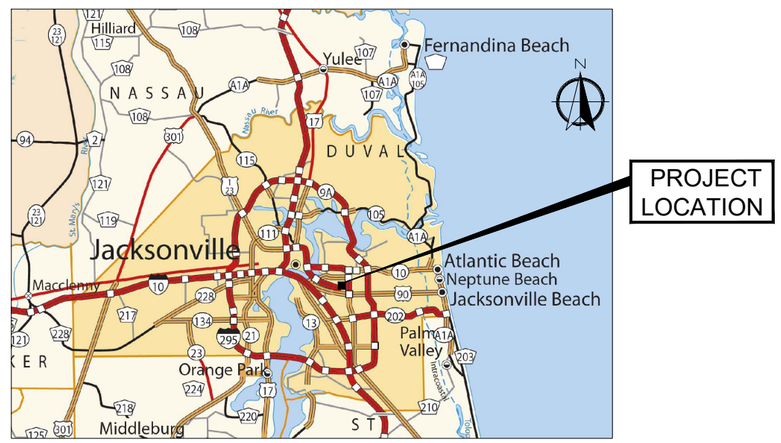

VICINITY MAP

NOT TO SCALE

PREPARED BY:

MITTAUER & ASSOCIATES, INC.
CONSULTING ENGINEERS
580-1 WELLS ROAD, ORANGE PARK, FLORIDA 32073
TEL. (904) 278-0030 FAX. (904) 278-0840 FLORIDA LICENSE CA-6569

JEA sm
Building Community sm

JEA REFERENCE DOCUMENTS IN EFFECT DURING DESIGN:
Water and Wastewater Standards Manual (January 1, 2020)
Water, Wastewater, and Reclaimed Water Design Guidelines (Rev June 2019)

BID SET
06/29/20

NO.	BY	DATE	REVISIONS
6	X	X	
5	X	X	
4	X	X	
3	X	X	
2	X	X	
1	X	X	

BID DATE: XXX

DESIGN ENGINEER
JASON R. SHEPLER, P.E.
FLORIDA REGISTRATION NO. 58760

DESIGNER: JRS
DRAWN BY: YT-SA
DATE: JUNE 2020
CHECKED BY: MPT
DATE: JUNE 2020

JEA Building Community sm

PROJ TITLE:
HOLIDAY ROAD MASTER PUMP STATION
SPLITTER BOX REPLACEMENT
COVER SHEET

JEA PROJ NO.:

PROJ. NO. 8006211
DATE: JUNE 2020
SCALE: NONE

NO. SHEETS 34
SHEET NO. 1
DRAWING NO. G-1

M:\cad files\JEA\0801402 holiday rd master ps splitter box replacement\Design\G1-G2.dwg Current Layout Tab = G-1 Mon Jun 29, 2020 - 15:35

GENERAL NOTES

1. EXISTING UNDERGROUND UTILITIES HAVE BEEN SHOWN FROM THE BEST AVAILABLE INFORMATION INCLUDING QUALITY LEVEL 'B' DESIGNATIONS. CONTRACTOR SHALL FIELD DETERMINE THE LOCATION, SIZE, AND DEPTH OF ALL EXISTING UTILITIES. CONTRACTOR SHALL PROVIDE COMPLETE PIPING SYSTEM INCLUDING ALL FITTINGS NECESSARY TO INTERCONNECT PIPING SYSTEMS AND TO AVOID CONFLICTS WITH EXISTING AND PROPOSED PIPES/STRUCTURES.
2. IT SHALL BE THE SOLE RESPONSIBILITY OF THE CONTRACTOR TO LOCATE AND AVOID ALL UTILITIES, STRUCTURES AND OBSTRUCTIONS BOTH ABOVE AND BELOW THE GROUND SURFACE. ALL DAMAGES RESULTING FROM THE CONTRACTOR'S FAILURE TO COMPLY WITH THIS REQUIREMENT SHALL BE REPAIRED AT THE CONTRACTOR'S EXPENSE.
3. CONTRACTOR IS RESPONSIBLE FOR SUPPORTING/PROTECTING ALL EXISTING IMPROVEMENTS (I.E., UTILITIES, UTILITY POLES, STRUCTURES, PAVEMENT, SIDEWALKS, FOUNDATIONS, ETC.) WHICH MAY BE DAMAGED/UNDERMINED AS A RESULT OF HIS OPERATIONS. CONTRACTOR MAY BE REQUIRED TO SHORE, SHEET, BRACE, OR SUPPORT WORK TO PROTECT EXISTING IMPROVEMENTS. ALL COSTS ASSOCIATED WITH SUPPORTING/PROTECTING EXISTING IMPROVEMENTS SHALL BE BORNE BY THE CONTRACTOR.
4. ALL EXISTING FACILITIES (E.G., PIPES, ROADWAYS, SIDEWALKS, LANDSCAPING, STRUCTURES, ETC.) NOT INDICATED TO BE DISTURBED/RESTORED WHICH ARE DISTURBED/DAMAGED AS A RESULT OF CONTRACTOR'S OPERATIONS SHALL BE RESTORED TO A CONDITION EQUAL TO OR BETTER THAN THAT WHICH EXISTED PRIOR TO CONSTRUCTION, AT CONTRACTOR'S EXPENSE.
5. HORIZONTAL AND VERTICAL CONTROLS ARE SUBJECT TO ADJUSTMENTS IN THE FIELD IF NECESSARY TO AVOID UTILITY CONFLICTS UPON APPROVAL OF THE ENGINEER OR HIS REPRESENTATIVE. CONTRACTOR SHALL NOT ADJUST LOCATION OF PIPE OR OTHER FACILITIES (EITHER VERTICALLY OR HORIZONTALLY) WITHOUT APPROVAL OF ENGINEER OR HIS REPRESENTATIVE.
6. ALL TEMPORARY PIPING SHALL BE PROPERLY RESTRAINED (SEE SPECIFICATIONS).
7. ALL TEMPORARY PIPING SHALL BE PROPERLY SUPPORTED AND/OR SECURED TO TANKS, BUILDINGS, OR OTHER STRUCTURES USING STRAPS, FASTENERS, ETC. THE SUPPORTS, WHERE REQUIRED, SHALL BE SIZED TO RESTRAIN THE PIPING AT REACTION POINTS SUCH AS BENDS, TEES, VALVES, ETC.
8. CONTRACTOR SHALL BE RESPONSIBLE FOR MAINTAINING SERVICE TO THE EXISTING MASTER PUMP FACILITY. HE SHALL PERFORM ALL BYPASSING NECESSARY TO KEEP THE STATION OPERATING PROPERLY DURING CONSTRUCTION. HE SHALL COORDINATE ALL DIVERSIONS OF FLOW, DRAINING OF TANKS, DEMOLITION OF EXISTING FACILITIES, ETC., CLOSELY WITH OWNER TO AVOID POTENTIAL VIOLATIONS AND OPERATING PROBLEMS. ALL ARRANGEMENTS FOR BYPASSING, DIVERSION OF FLOW, DRAINING OF TANKS, DEMOLITION, ETC., SHALL BE SUBJECT TO APPROVAL OF OWNER. ALL COSTS ASSOCIATED WITH BYPASSING AND OTHER TEMPORARY FACILITIES SHALL BE BORNE BY THE CONTRACTOR.
9. CONTRACTOR SHALL PROVIDE ALL FILL REQUIRED TO RESTORE GRADES AT HIS EXPENSE.
10. DURING ANY CONSTRUCTION ACTIVITY, INCLUDING STABILIZATION AND REVEGETATION OF DISTURBED SURFACES, THE CONTRACTOR IS RESPONSIBLE FOR THE SELECTION, IMPLEMENTATION, AND OPERATION OF ALL EROSION AND SEDIMENT CONTROL MEASURES REQUIRED TO RETAIN SEDIMENT ON-SITE AND PREVENT VIOLATIONS OF THE WATER QUALITY STANDARDS IN CHAPTERS 62-3 AND 62-4, FAC. THE CONTRACTOR IS ENCOURAGED TO USE APPROPRIATE BEST MANAGEMENT PRACTICES DESCRIBED IN THE FLORIDA LAND DEVELOPMENT MANUAL: A GUIDE TO SOUND LAND AND WATER MANAGEMENT (DER, 1988).
11. ALL GRASSED AREAS DISTURBED BY CONSTRUCTION SHALL BE RESODDED.
12. THE CONTRACTOR SHALL EMPLOY A LAND SURVEYOR, REGISTERED IN THE STATE OF FLORIDA TO REFERENCE AND RESTORE PROPERTY CORNERS AND LAND MARKERS WHICH MAY BE DISTURBED AS A RESULT OF CONTRACTOR'S OPERATIONS.
13. THE CONTRACTOR SHALL BE RESPONSIBLE FOR LAYING OUT THE WORK AND FOR ESTABLISHING PROJECT TEMPORARY BENCH MARKS; ELEVATION LINES AND GRADES; AND RIGHT-OF-WAY AND PROPERTY BOUNDARY LIMITS FOR CONSTRUCTION.
14. TOPOGRAPHIC SURVEY PROVIDED BY CLARY & ASSOCIATES PROFESSIONAL SURVEYORS & MAPPERS, SURVEY DATED 11/07/19, JOB No. 2019-709, LOCATED IN JACKSONVILLE, FLORIDA.
15. PROJECT TEMPORARY BENCHMARK LOCATION: SEE DWG. C-1 FOR TEMPORARY BENCHMARK LOCATION. THE TEMPORARY BENCHMARK IS LOCATED ON A 60D NAIL WITH CLARY DISK IN A 19" LONGLEAF PINE TREE SET AT ELEVATION 10.49 FEET (NAVD88).
16. IF REQUIRED BY ANTICIPATED WITHDRAWAL RATES, THE CONTRACTOR IS RESPONSIBLE FOR OBTAINING A CONSUMPTIVE USE PERMIT (C.U.P.) THROUGH THE ST. JOHNS WATER MANAGEMENT DISTRICT SHOULD DEWATERING ACTIVITIES BE REQUIRED.
17. ALL WORK SHALL BE IN ACCORDANCE WITH BID DOCUMENTS, JEA WATER AND SEWER STANDARDS, DETAILS AND MATERIALS MANUAL, REV. 01/20. AND CITY OF JACKSONVILLE STANDARD SPECIFICATIONS AND DETAILS AND ALL APPLICABLE STATE AND LOCAL REGULATIONS.

SITE SPECIFIC NOTES

1. THE WORK AREA IS LOCATED WITHIN A JEA HIGH-SECURITY ZONE. AS NOTED WITHIN THE CONSTRUCTION DRAWINGS, THE CONTRACTOR SHALL MAINTAIN A FENCED AND LOCKED PERIMETER DURING ALL TIMES. TEMPORARY FENCING AND/OR SECURITY MAY BE REQUIRED BY THE CONTRACTOR TO MEET THESE REQUIREMENTS AND SHOULD BE INCLUDED WITHIN THEIR GENERAL CONDITION PRICING BASED ON THEIR PROPOSED SEQUENCING APPROACH. ANY SECURITY ISSUES SHALL BE IMMEDIATELY BROUGHT TO JEA'S ATTENTION. CONTACT THE FOLLOWING PERSONNEL:

   HUGH WEST, P.E. (JEA PROJECT MANAGER) 904.665.4409
2. SEE TECHNICAL SPECIFICATION SECTION 01060 FOR ADDITIONAL PERMITTING REQUIREMENTS TO BE COMPLETED BY THE CONTRACTOR.
3. THE CONTRACTOR SHALL PROVIDE ALL REQUIRED OSHA PROVISIONS (RESPIRATORS, VENTILATION, MONITORING, ETC.) TO PROTECT ALL PERSONNEL THAT ENTER THE WORK AREA. ALL EXISTING CLOSED SEWER AREAS AND LOCATIONS WITHIN THE WETWELL OF THE PUMP STATION ARE CLASS I DIVISION 1 AREAS AS DEFINED BY OSHA AND THE NEC DUE TO ELEVATED HYDROGEN SULFIDE LEVELS.

STRUCTURAL NOTES

1. ALL CONSTRUCTION SHALL BE IN ACCORDANCE WITH THE LOCAL BUILDING & ZONING DEPARTMENT REQUIREMENTS AND THE 2017 FLORIDA BUILDING CODE (6th EDITION) WILL ALL REVISIONS. ALL DESIGN SHALL BE IN ACCORDANCE WITH THE 2017 FLORIDA BUILDING CODE (6th EDITION) WITH ALL REVISIONS, ACI318, ACI350 AND ASCE 7-16.

   LIVE LOADS (MINIMUM):
   ROOFS & CANOPIES - 20 PSF
   STORAGE SPACES - 150 PSF
   STAIRS & WALKWAYS - 100 PSF
   DEAD LOADS: ACTUAL MATERIAL WEIGHTS

   WINDLOAD DESIGN CRITERIA

   ITEMS PER FLORIDA BUILDING CODE SECTION 1603.1.4:
   BASIC WIND SPEED: (VULT) = 137 MPH
   (VAST) = 107 MPH
   BUILDING RISK CATEGORY: III
   WIND EXPOSURE CATEGORY: C
   MEAN ROOF HEIGHT: 20
   ROOF SLOPE: FLAT
   INTERNAL PRESSURE COEFFICIENTS: +/- 0.18
2. ALL STRUCTURAL CONCRETE SHALL HAVE A MIN. COMPRESSIVE STRENGTH OF 4,000 PSI AFTER 28 DAYS UNLESS OTHERWISE NOTED.
3. ALL REINFORCING STEEL SHALL CONFORM TO ASTM A615 GRADE 60, EXCEPT BARS TO BE WELDED SHALL CONFORM TO ASTM A706.
4. FOR SIZE AND LOCATION OF EMBEDDED ITEMS AND OPENINGS, THE CONTRACTOR MUST REFER TO MECHANICAL, STRUCTURAL, PIPING AND VENDORS DRAWINGS.
5. EQUIPMENT ANCHOR BOLTS AND RODS SHALL BE 316 SS AND SET FROM TEMPLATES MADE TO FIT HOLES IN EQUIPMENT ACCORDING TO APPROVED MANUFACTURERS SHOP DRAWINGS.
6. CONTRACTOR SHALL VERIFY ALL DIMENSIONS AND EXISTING CONDITIONS AT THE SITE BEFORE PROCEEDING WITH CONSTRUCTION.
7. UNLESS OTHERWISE SHOWN ON DRAWINGS, MIN. COVER FOR REINFORCING STEEL SHALL BE AS FOLLOWS:
   CONCRETE CAST AGAINST EARTH - 3"
   SLABS ON GRADE - CENTERED
   ALL OTHER - 2"
8. ALL REINFORCING SHALL BE FABRICATED AND HELD SECURELY IN POSITION WITH STANDARD ACCESSORIES IN ACCORDANCE WITH ACI 315 "DETAILS AND DETAILING CONCRETE REINFORCEMENT", LATEST EDITION.
9. SPLICES IN REINFORCING, WHERE PERMITTED, SHALL BE AS NOTED, OR AS FOLLOWS:
   WELDED WIRE FABRIC - TWO MESH OR 12" (MIN.)
   TEMPERATURE REINFORCING - 24 BAR DIAMETERS BUT NOT LESS THAN 12"
   ALL OTHER BARS - CLASS "B" LAP.
   SPLICES IN TOP REINFORCING SHALL BE MADE AT MIDSPAN, BOTTOM REINFORCING AT SUPPORT, OR AS NOTED ON DRAWINGS.

	Class B Lap Length in Inches	
Bar Size	fc' = 3,000 psi	fc' = 4,000 psi
#3	22	19
#4	29	25
#5	36	31
#6	43	38
#7	63	54
#8	72	62
#9	81	69

10. PROVIDE 3/4" CHAMFER ON ALL EXPOSED EDGES OF CONCRETE.
11. PROVIDE 1/2" PREMOLDED EXPANSION JOINT MATERIAL WHERE SLAB ON GRADE IS CAST AROUND COLUMNS OR AGAINST WALLS.
12. ALL MASONRY SHALL UTILIZE STANDARD PRECAST MASONRY UNITS AND BE LAID TRUE AND PLUMB.
13. ALL CONCRETE LINTELS SHALL BE REINFORCED WITH 2-#5 BARS TOP AND BOTTOM AS A MINIMUM AND HAVE A MASONRY END BEARING EACH END OF 1" PER FOOT OF SPAN WITH A MINIMUM OF 8".
14. COATING: APPLY ASPHALT PAINT COATING BETWEEN DIFFERENT METALS AND FOR ALUMINUM SET AGAINST CONCRETE.
15. THE DESIGN OF ALL STRUCTURAL CONCRETE FOR TANKS CONFORMS TO ACI 350: CODE REQUIREMENTS FOR ENVIRONMENTAL ENGINEERING STRUCTURES.
16. LOCATION OF CONSTRUCTION JOINTS, PROPOSED BY THE CONTRACTOR, SHALL BE SUBMITTED TO THE ENGINEER FOR APPROVAL PRIOR TO INITIATING ANY CONSTRUCTION OR FABRICATION WHICH COULD BE AFFECTED BY THE LOCATION. ALL CONSTRUCTION JOINTS BELOW EITHER THE PLANT LIQUID OR GROUND LEVEL SHALL INCORPORATE A PROPERLY DESIGNED AND FABRICATED PVC WATERSTOP.
17. U.N.O. ALL STRUCTURAL ANCHORING SYSTEMS SHALL BE 316 S.S.

COMPONENT & CLADDING PRESSURE

		WIND PRESSURE (PSF)	
ZONE	EFFECTIVE AREA (SF)	POSITIVE	NEGATIVE
1	10	N/A	-60.8
	20		-57.5
	50		-53.5
	100		-50.2
2	10	N/A	-95.4
	20		-90.2
	50		-84.0
	100		-78.8
3	10	N/A	-123.0
	20		-116.3
	50		-108.3
	100		-101.5
4	10	41.5	-41.5
	20	39.3	-40.1
	50	36.6	-38.2
	100	34.3	-36.6
	500	29.1	-33.2
5	10	41.5	-76.2
	20	39.3	-70.5
	50	36.6	-62.9
	100	34.3	-58.3
	500	29.1	-45.8

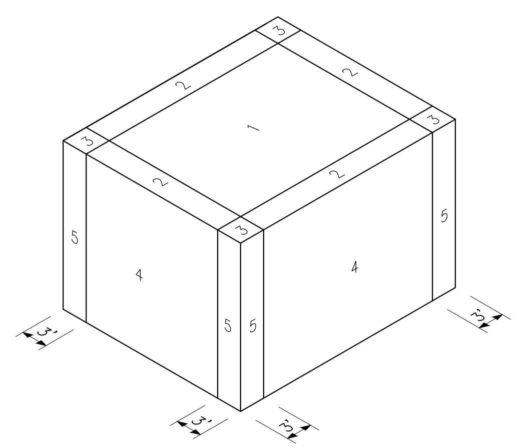

OPEN TANK

LEGEND

PROPOSED / EXISTING

- PIPING
- MANHOLE (MH)
- VALVE (SITE PLAN)
- VALVE
- STRUCTURE OR IMPROVEMENT
- REMOVE EXISTING IMPROVEMENT
- ABANDON EXISTING IMPROVEMENT
- ASPHALT PAVEMENT
- PIPE FLOW DIRECTION
- GRADE CONTOURS (63)
- SPOT ELEVATIONS (63.00)
- SLOPE GRADE & DIRECTION (1%)

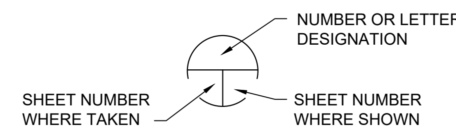

DETAIL/SECTION KEY

INDEX OF DRAWINGS:

SHEET NUMBER	DRAWING NUMBER	SHEET TITLE
1	G-1	COVER SHEET
2	G-2	GENERAL NOTES, LEGEND AND SHEET INDEX
3	G-3	PROJECT OVERALL & LOCATION PLANS
		SITE IMPROVEMENTS
4	C-1	EXISTING CONDITIONS & DEMOLITION PLAN
5	C-2	SITE PLAN
6	C-3	SITE DETAILS
7	C-4	SITE DETAILS
		SPLITTER BOX REPLACEMENT
8	M-1	DEMOLITION & YARD PIPING PLAN
9	M-2	DEMOLITION PLAN & SECTION
10	M-3	MODIFICATION PLAN & SECTIONS
11	M-4	SECTIONS & DETAILS
12	M-5	SPLITTER BOX - PLANS, SECTION & DETAIL
13	M-6	MANHOLE NO. 3 - PLANS, SECTION & DETAIL
14	M-7	DETAILS & SECTIONS
15	M-8	DETAILS & SECTIONS
		ODOR CONTROL IMPROVEMENTS
16	D-1	ODOR CONTROL SYSTEM - PLAN & SECTIONS
17	D-2	ODOR CONTROL SYSTEM - DETAILS
		ROOF MODIFICATIONS
18	A-1	DEMOLITION-MODIFICATION PLAN, SECTION & ELEVATIONS
19	A-2	ROOF MODIFICATIONS PLAN
20	A-3	ROOF MODIFICATION DETAILS
		ELECTRICAL IMPROVEMENTS
21	E-1	ELECTRICAL LEGEND AND SCHEMATICS
22	E-2	SINGLE LINE DIAGRAM
23	E-3	ELECTRICAL SITE PLAN
24	E-4	TOP FLOOR ELECTRICAL PLAN
25	E-5	INTERMEDIATE ELECTRICAL PLAN
26	E-6	BOTTOM ELECTRICAL PLAN
27	E-7	ELECTRICAL SCHEDULES & DETAILS
28	E-8	ELECTRICAL DETAILS
29	I-1	GENERAL INSTUMENT NOTES, LEGEND & ABBREVIATIONS
30	I-2	EXISTING P&ID DIAGRAM
31	I-3	P&ID DIAGRAM MODIFICATIONS
32	SC-1	SECURITY FLOOR PLAN
33	SC-2	SECURITY NETWORK RACK
		STORM WATER POLLUTION PREVENTION PLAN
34	SWPPP-1	STORM WATER POLLUTION PREVENTION PLAN

MITTAUER & ASSOCIATES, INC.
CONSULTING ENGINEERS
580-1 WELLS ROAD, ORANGE PARK, FLORIDA 32073
TEL. (904) 278-0030 FAX. (904) 278-0840 FLORIDA LICENSE CA-6569
M&A 0801-40-2

NO.	BY	DATE	REVISIONS
6.	X	X	X
5.	X	X	X
4.	X	X	X
3.	X	X	X
2.	X	X	X
1.	X	X	X

DESIGN ENGINEER
JASON R. SHEPLER, P.E.
FLORIDA REGISTRATION NO.
58760

DESIGNER: JRS
DRAWN BY: YP/JSA
DATE: JUNE 2020
CHECKED BY: MPT
DATE: JUNE 2020

JEA Building Community[sm]

HOLIDAY ROAD MASTER PUMP STATION
SPLITTER BOX REPLACEMENT
GENERAL NOTES, LEGEND AND SHEET INDEX

PROJ. NO. 8006211
DATE: JUNE 2020
SCALE: NONE

NO. SHEETS 34
SHEET NO. 2
DRAWING NO. G-2

M:\cad files\JEA\0801402 holiday rd master ps splitter box replacement\Design\G1-G2.dwg Current Layout Tab = G-2 Mon Jun 29, 2020 - 15:35
Xrefs Attached=

EXISTING MANHOLE DATA

MH "A"	TOP EL.	=	7.59'
	30" NE INV.	=	-1.37'
	30" SW INV.	=	-1.67'
MH "B"	TOP EL.	=	7.97'
	16" NW INV.	=	3.35'
	12" NE INV.	=	0.52'
	12" E INV.	=	2.31'
	12" SE INV.	=	3.02'
	30" S. INV.	=	0.66'
MH "C"	TOP EL.	=	8.23'
	10" NW INV.	=	1.50'
	10" SE INV.	=	1.52'
	12" SW INV.	=	1.40'
MH "D"	TOP EL.	=	9.99'
	10" NW INV.	=	2.33'
	10" NE INV.	=	2.38'
	10" SE INV.	=	2.40'
MH "E"	TOP EL.	=	6.33'
	30" NE INV.	=	-2.98'
	30" S INV.	=	-3.62'

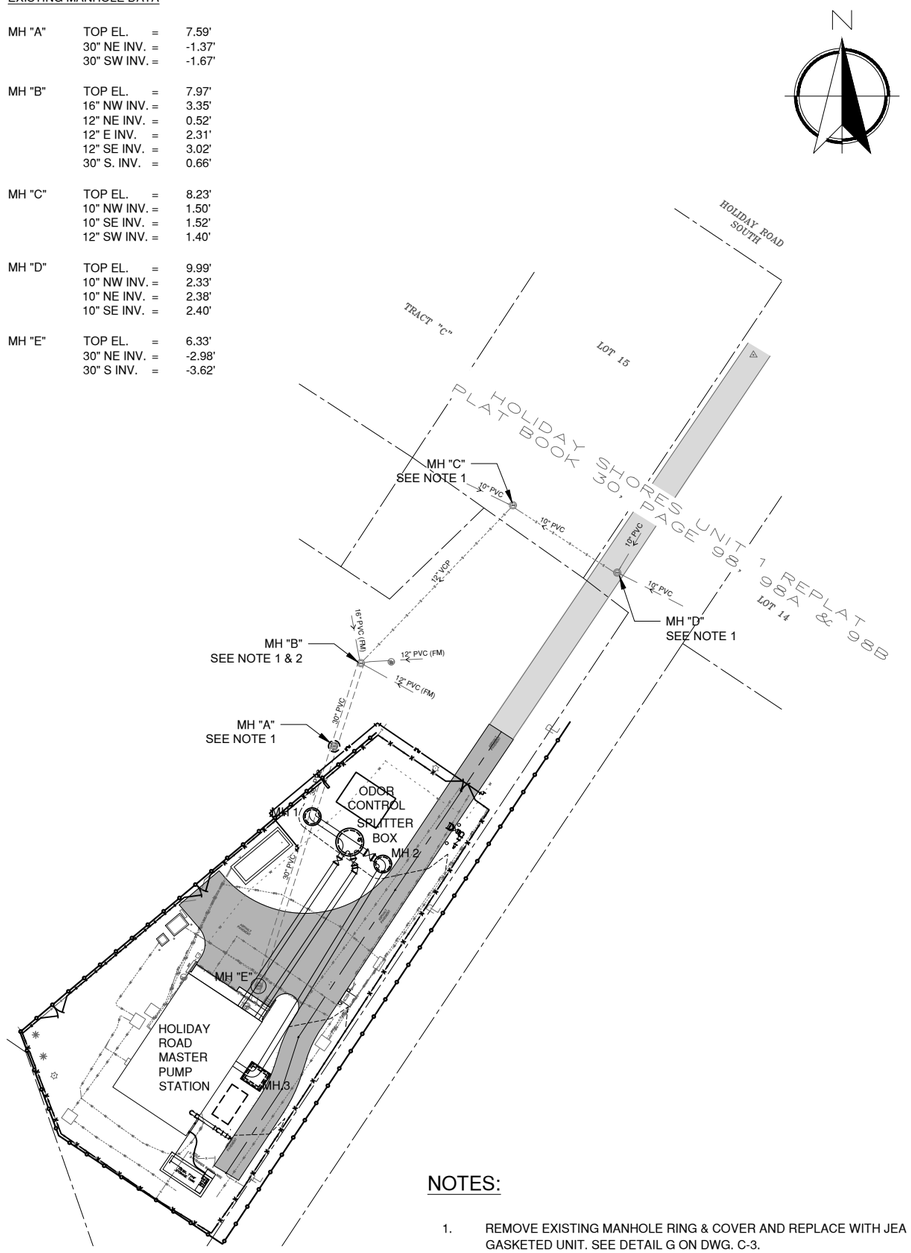

NOTES:

1. REMOVE EXISTING MANHOLE RING & COVER AND REPLACE WITH JEA GASKETED UNIT. SEE DETAIL G ON DWG. C-3.
2. CONTRACTOR SHALL EXCAVATE AROUND THE PERIMETER OF THE MANHOLE WHERE THE FORCE MAINS CONNECT TO THE 'MH B' AND LOCATE THE SOURCE OF AN EXPECTED LEAK OR SEPARATION THAT IS CAUSING SOIL TO ENTER THE COLLECTION SYSTEM. COORDINATE WITH THE ENGINEER AND JEA ON REPAIR REQUIREMENTS UPON CONFIRMATION OF EXISTING CONDITION. A SEPARATE ALLOWANCE IS PROVIDED ON THE BID FORM TO ADDRESS THIS REPAIR.

PROJECT OVERALL PLAN

SCALE: 1" = 30'

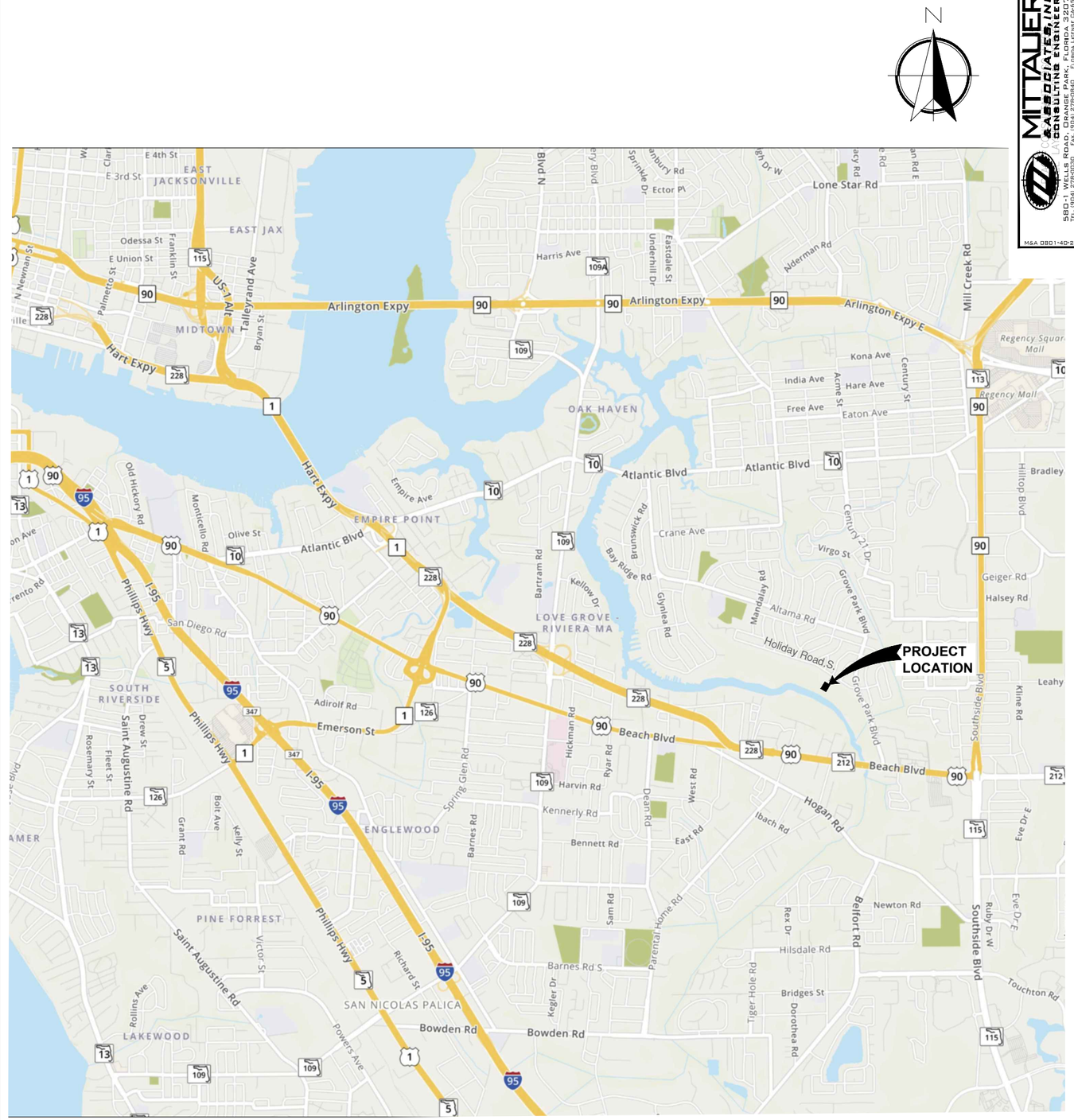

LOCATION PLAN

SCALE: 1" = 1,800'±

MITTAUER & ASSOCIATES, INC.
CONSULTING ENGINEERS
580-1 WELLS ROAD, ORANGE PARK, FLORIDA 32073
TEL. (904) 278-0030 FAX. (904) 278-0840 FLORIDA LICENSE CA-6569
M&A 0801-40-2

NO.	BY	DATE	REVISIONS
6.	X	X	X
5.	X	X	X
4.	X	X	X
3.	X	X	X
2.	X	X	X
1.	X	X	X

DESIGN ENGINEER
JASON R. SHEPLER, P.E.
FLORIDA REGISTRATION NO.
58760

DESIGNER: JRS
DRAWN BY: YPJSA
DATE: JUNE 2020
CHECKED BY: MPT
DATE: JUNE 2020

JEA Building Community

HOLIDAY ROAD MASTER PUMP STATION
SPLITTER BOX REPLACEMENT
PROJECT OVERALL & LOCATION PLANS

PROJ. NO. 8006211
DATE: JUNE 2020
SCALE: NONE

NO. SHEETS 34
SHEET NO. 3
DRAWING NO. G-3

M:\cad files\JEA\0801402 holiday rd master ps splitter box replacement\Design\G3.dwg Current Layout Tab = G-3 Mon Jun 29, 2020 - 15:35

Xrefs Attached= C1-C2-M1 [.\C1-C2-M1.dwg]

NOTES:

1. JEA COMPLETED INTERIM MEASURES TO PROTECT PERSONNEL AND TO REMOVE EXISTING STRUCTURE COMPONENTS THAT WERE NEAR FAILURE. THE CONTRACTOR SHALL FIELD REVIEW EXISTING CONDITIONS AND TAKE ALL NECESSARY PRECAUTIONS TO PROTECT WORKERS AND EQUIPMENT DURING REHABILITATION OF THE STRUCTURE. SEE DWG. M-1 FOR ADDITIONAL INFORMATION.

2. THE CONTRACTOR SHALL PROTECT THE EXISTING 26.4 KV INCOMING ELECTRICAL SERVICE DURING CONSTRUCTION ACTIVITIES. THE HIGH-VOLTAGE POWER DOES NOT STEP DOWN TO 480V-3PH POWER UNTIL IT PASSES THROUGH THE ON-SITE TRANSFORMER.

3. THE CONTRACTOR SHALL PROTECT AND/OR RELOCATE THE EXISTING FIBER OPTIC LINES. ANY DAMAGE TO THE COMMUNICATIONS LINE SHALL BE IMMEDIATELY REPAIRED OR REPLACED BY THE CONTRACTOR PER JEA REQUIREMENTS AT NO ADDITIONAL COSTS. SEE DWG M-1 FOR RELOCATION LIMITS OF WORK.

4. THE IMPROVEMENTS WILL REQUIRE TRENCHING AND SUPPORT ADJACENT TO AND UNDER THE EXISTING 18" FORCE MAIN. THE CONTRACTOR SHALL ENSURE THIS PIPELINE IS PROTECTED AT ALL TIMES. IF THE PIPELINE IS DAMAGED, THEN BYPASS OPERATIONS MUST BEGIN IMMEDIATELY TO ENSURE SANITARY SEWER OVERFLOW (SSO) CONDITIONS DO NOT ARISE.

5. THE xx" DESIGNATION ALONG THE EXISTING UTILITY LINES PROVIDES AN INDICATION OF BURIAL DEPTH PER ON-SITE GROUND PENETRATING RADAR MEASUREMENTS.

6. CONTRACTOR SHALL REMOVE & REPLACE FENCING IN PHASES TO ENSURE THE SITE IS SECURE AT ALL TIMES WHEN THE CONTRACTOR OR JEA PERSONNEL ARE NOT ON-SITE. THE CONTRACTOR MAY PROVIDE ALTERNATE METHOD TO SECURE THE SITE, BUT THOSE PROPOSALS MUST BE APPROVED BY JEA AND INCUR NO ADDITIONAL COSTS FROM THE AWARDED AMOUNT.

7. CONTRACTOR SHALL SEQUENCE WORK SO THE EXISTING ELECTRICAL SUBSTATION CONCRETE PAD IS DEMOLISHED AND GENERATOR FUEL TANK PAD IS CONSTRUCTED PRIOR TO BYPASS PUMPING, SEQUENCE "A". THE FUEL TANK, FUEL PUMPING, AND FUEL MONITORING SYSTEMS SHALL BE RELOCATED DURING BYPASS SEQUENCE "A".

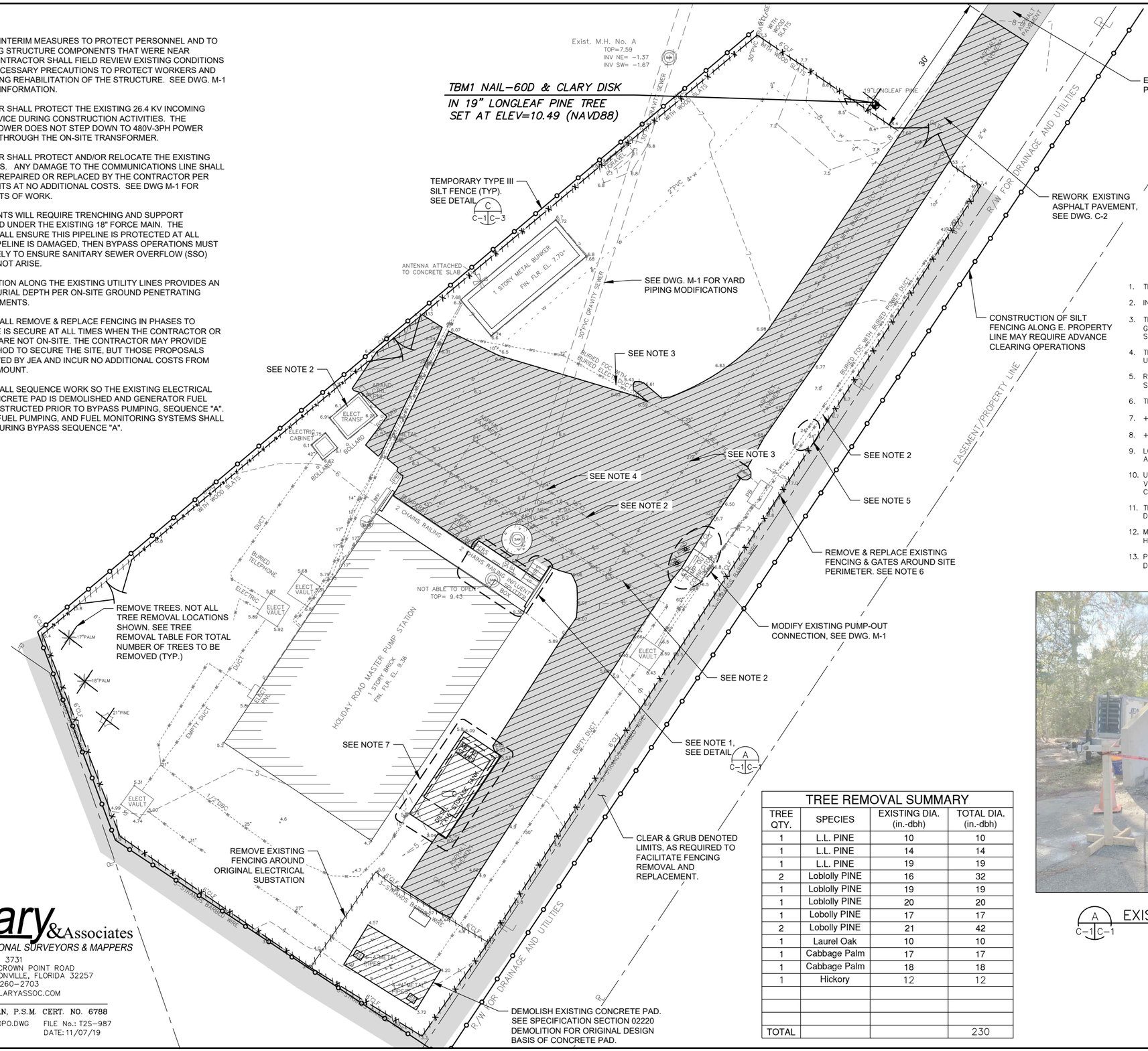

Map Showing a Topographic & Specific Purpose Survey

SURVEYOR NOTES

1. THIS MAP DOES NOT REPRESENT A BOUNDARY SURVEY.
2. INTERIOR IMPROVEMENTS NOT LOCATED EXCEPT AS SHOWN.
3. THIS SURVEY ONLY SHOWS IMPROVEMENTS/STRUCTURES SITUATED ABOVE GROUND. BELOW GROUND IMPROVEMENTS/STRUCTURES, IF ANY, ARE NOT SHOWN OR LOCATED.
4. THIS DRAWING MAY HAVE BEEN ENLARGED OR REDUCED FROM THE ORIGINAL. UTILIZE THE GRAPHIC SCALE AS SHOWN.
5. REFERENCE BENCHMARK: FDOT FLORIDA PERMANENT REFERENCE NETWORK, SITE NAME ST JOHNS, SITE CODE KREG, ELEVATION = 53.81' (NAVD88)
6. THIS SURVEY WAS MADE WITHOUT THE BENEFIT OF A TITLE COMMITMENT.
7. +20.4 DENOTES SPOT ELEVATION ON GROUND. (NAVD88).
8. +20.58 DENOTES SPOT ELEVATION ON ASPH, CONC, ETC. (NAVD88).
9. LOCATIONS AND DEPTHS OF UNDERGROUND UTILITIES SHOWN HEREON ARE APPROXIMATE ONLY.
10. UNDERGROUND UTILITIES AS SHOWN HEREON ARE BASED ON FIELD VERIFICATION OF INFORMATION PROVIDED BY THE CLIENT AND/OR UTILITY COMPANY. NO OTHER UTILITIES LOCATED THIS DATE.
11. TREES NOT LOCATED, EXCEPT AS SHOWN HEREON, IN ACCORDANCE WITH DUVAL COUNTY TREE ORDINANCE.
12. MEASUREMENTS ON TREES REFER TO DIAMETER DIMENSIONS AT BREAST HEIGHT LEVEL (DBH).
13. PARCEL LINES SHOWN HEREON ARE APPROXIMATE ONLY AND ARE TAKEN FROM DUVAL COUNTY GIS. (BOUNDARY NOT DONE)

TREE REMOVAL SUMMARY

TREE QTY.	SPECIES	EXISTING DIA. (in.-dbh)	TOTAL DIA. (in.-dbh)
1	L.L. PINE	10	10
1	L.L. PINE	14	14
1	L.L. PINE	19	19
2	Loblolly PINE	16	32
1	Loblolly PINE	19	19
1	Loblolly PINE	20	20
1	Lobolly PINE	17	17
2	Lobolly PINE	21	42
1	Laurel Oak	10	10
1	Cabbage Palm	17	17
1	Cabbage Palm	18	18
1	Hickory	12	12
TOTAL			230

A/C-1|C-1 EXISTING SPLITTER BOX CONDITION

Clary & Associates
PROFESSIONAL SURVEYORS & MAPPERS
LB NO. 3731
3830 CROWN POINT ROAD
JACKSONVILLE, FLORIDA 32257
(904) 260-2703
WWW.CLARYASSOC.COM

MICHAEL J. COLLIGAN, P.S.M. CERT. NO. 6788

CAD FILE: 2019-709 TOPO.DWG FILE No.: T2S-987
DATE: 11/07/19

MITTAUER & ASSOCIATES, INC. CONSULTING ENGINEERS
580-1 WELLS ROAD, ORANGE PARK, FLORIDA 32073
TEL: (904) 276-0160 FAX: (904) 276-0840 COA No. EC-6569

M&A 0801-40-2

NO.	BY	DATE	REVISIONS
6	X	X	X
5	X	X	X
4	X	X	X
3	X	X	X
2	X	X	X
1	X	X	X

DESIGN ENGINEER
JASON R. SHEPLER, P.E.
FLORIDA REGISTRATION NO. 58760

DESIGNER: JFG
DRAWN BY: VD/SA
DATE: JUNE 2020
CHECKED BY: MPT
DATE: JUNE 2020

JEA Building Community

HOLIDAY ROAD MASTER PUMP STATION
SPLITTER BOX REPLACEMENT
EXISTING CONDITIONS & DEMOLITION PLAN

PROJ. NO. 8006211
DATE: JUNE 2020
SCALE: AS SHOWN

NO. SHEETS IN SET 4
SHEET NO. 4
DRAWING NO. C-1

M:\cad files\JEA\0801402 holiday rd master ps splitter box replacement\Design\C1-C2-M1.dwg Current Layout Tab = C-1 Mon Jun 29, 2020 - 15:35

Xrefs Attached=

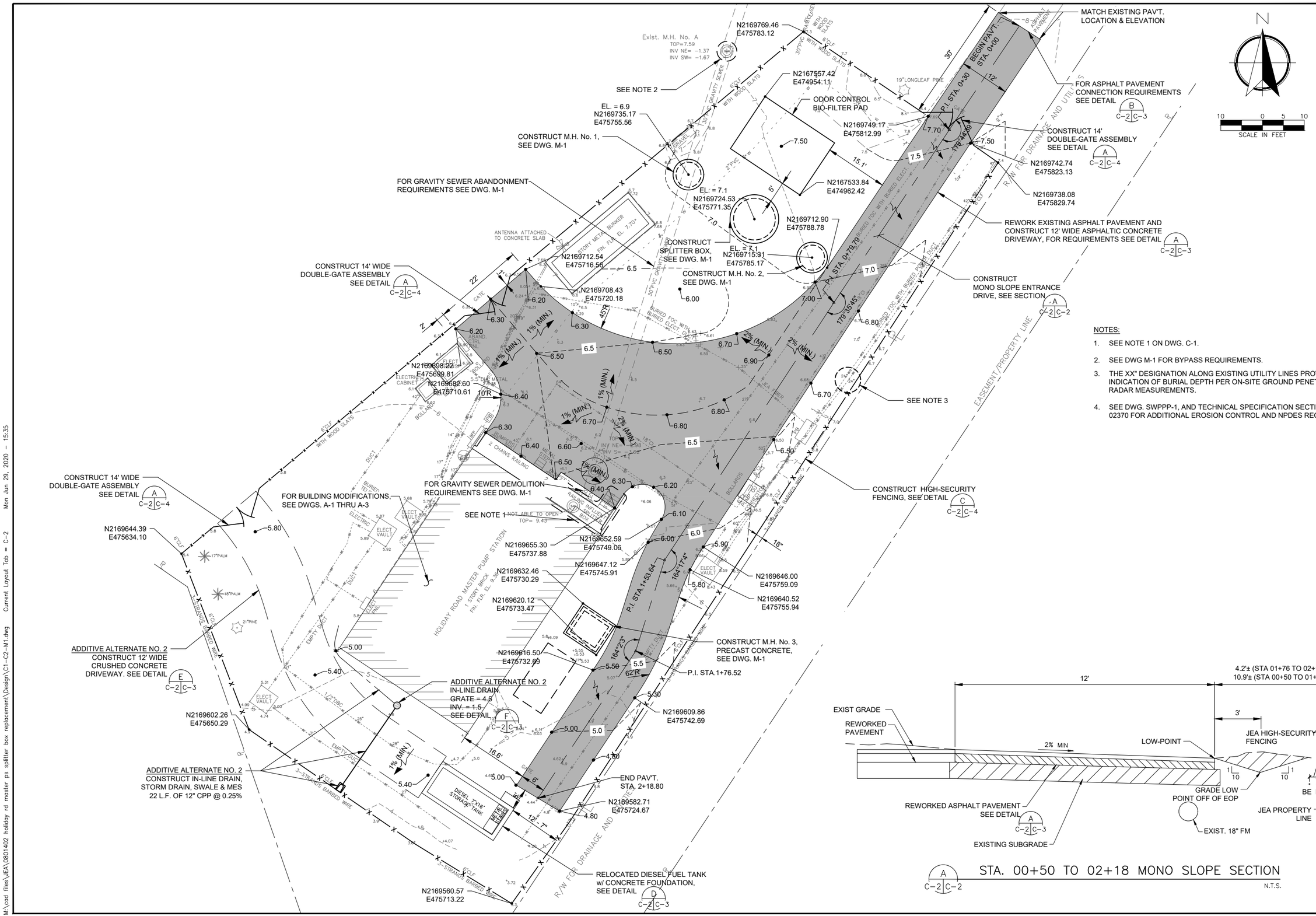

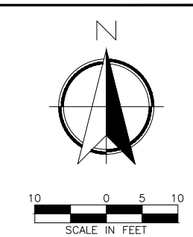

NOTES:

1. SEE NOTE 1 ON DWG. C-1.
2. SEE DWG M-1 FOR BYPASS REQUIREMENTS.
3. THE XX" DESIGNATION ALONG EXISTING UTILITY LINES PROVIDES AN INDICATION OF BURIAL DEPTH PER ON-SITE GROUND PENETRATING RADAR MEASUREMENTS.
4. SEE DWG. SWPPP-1, AND TECHNICAL SPECIFICATION SECTIONS 01060 & 02370 FOR ADDITIONAL EROSION CONTROL AND NPDES REQUIREMENTS.

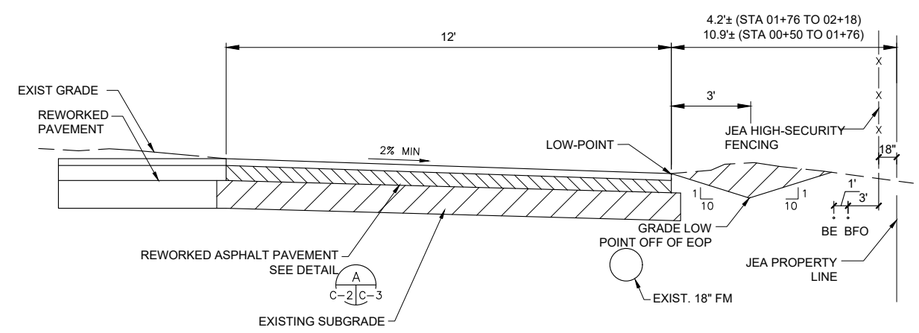

STA. 00+50 TO 02+18 MONO SLOPE SECTION

N.T.S.

MITTAUER & ASSOCIATES, INC. CONSULTING ENGINEERS
580-1 WELLS ROAD, ORANGE PARK, FLORIDA 32073
TEL. (904) 278-0030 FAX. (904) 278-0840 FLORIDA LICENSE CA-6569
M&A 0801-40-2

NO.	BY	DATE	REVISIONS
6.	X	X	X
5.	X	X	X
4.	X	X	X
3.	X	X	X
2.	X	X	X
1.	X	X	X

DESIGN ENGINEER
JASON R. SHEPLER, P.E.
FLORIDA REGISTRATION NO. 58760

DESIGNER: JRS
DRAWN BY: YPJSA
DATE: JUNE 2020
CHECKED BY: MPT
DATE: JUNE 2020

JEA Building Community

HOLIDAY ROAD MASTER PUMP STATION
SPLITTER BOX REPLACEMENT
SITE PLAN

PROJ. NO. 8006211
DATE: JUNE 2020
SCALE: AS SHOWN

NO. SHEETS 34
SHEET NO. 5
DRAWING NO. C-2

M:\cad files\JEA\0801402 holiday rd master ps splitter box replacement\Design\C1-C2-M1.dwg Current Layout Tab = C-2 Mon Jun 29, 2020 - 15:35

Xrefs Attached=

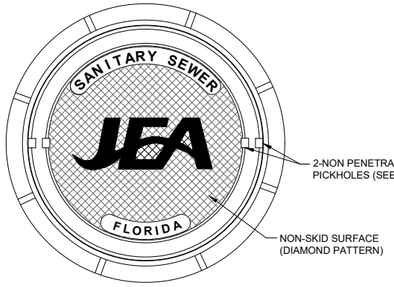

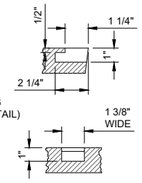

PICKHOLE DETAIL

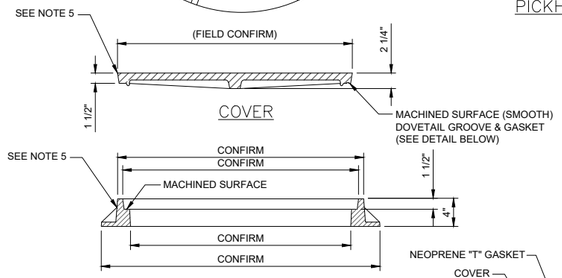

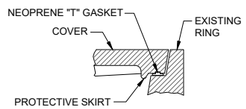

GROOVE & GASKET DETAIL

NOTES:

1. MATERIAL: ASTM A-48 CLASS 35B GRAY IRON.
2. RING WEIGHT 230 LBS APPROX.
3. COVER WEIGHT 230 LBS. APPROX.
4. ALL DIMENSIONS ARE SHOWN IN INCHES.
5. FOR EXISTING MANHOLE LOCATIONS DESIGNATED ON DWG G-3, THE CONTRACTOR SHALL CONFIRM EXISTING RING SIZE & CONDITION, CLEAN EXISTING RING OF DEBRIS, AND REPLACE COVER W/ GASKET CONNECTION.

G / G-2 C-3 GASKETED MH RING & COVER

NTS

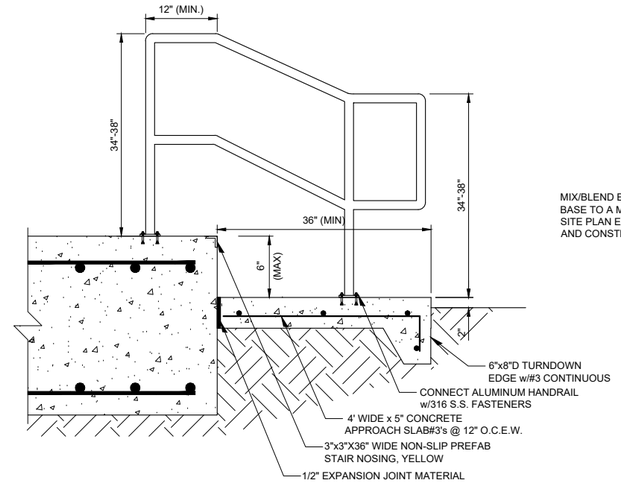

A / C-3 C-3 ADA COMPLIANT STAIR DETAIL

NTS

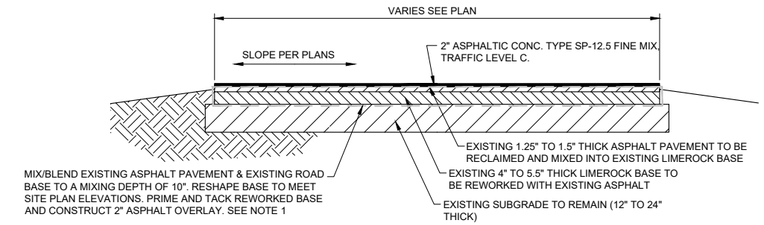

A / C-2 C-3 TYPICAL ASPHALTIC PARKING SECTION

NTS

NOTES:

1. THE BID FORM INCLUDES A UNIT PRICE FOR ADDITIONAL LIMEROCK TO MEET REQUIRED GRADES.
2. SEE TECHNICAL SPECIFICATION SECTION 02745 FOR EXISTING PAVEMENT CORE INFORMATION.

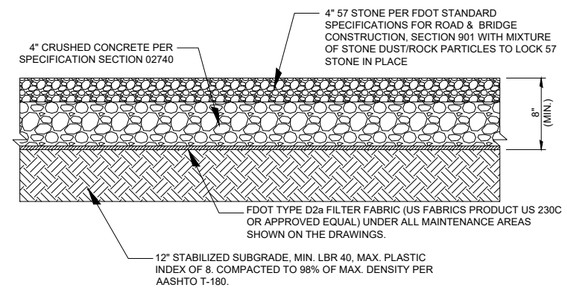

E / C-2 C-3 STABILIZED DRIVEWAY SECTION

NTS

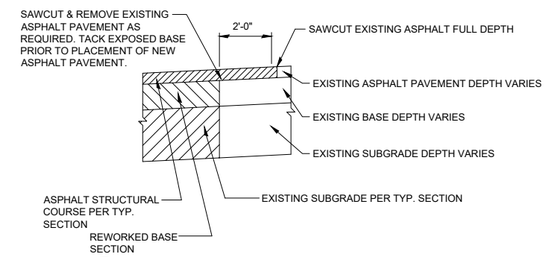

B / C-2 C-3 TYPICAL ASPHALT TO ASPHALT CONNECTION

NTS

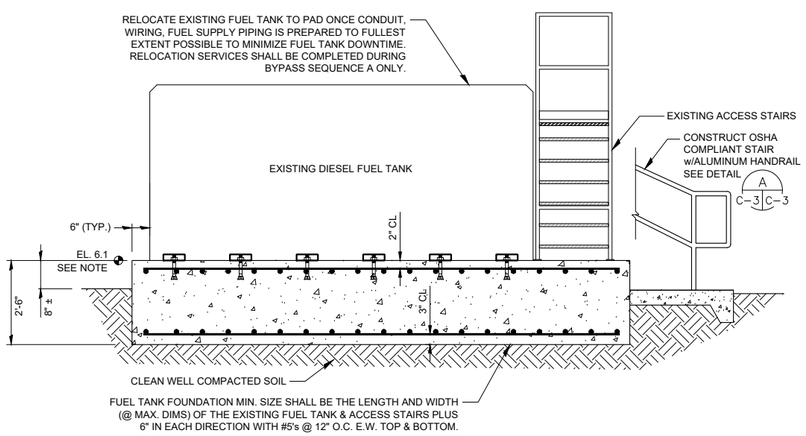

D / C-2 C-3 DIESEL FUEL TANK FOUNDATION

NTS

NOTE:
TOP OF FUEL TANK FOUNDATION SHALL MATCH EXISTING FUEL TANK ELEVATION TO ENSURE EXISTING FUEL SUPPLY & RETURN PIPING REMAIN AT EXISTING CENTERLINE ELEVATIONS.

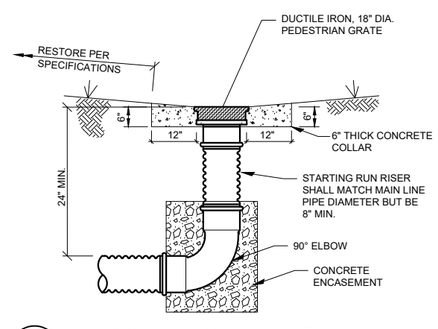

F / C-2 C-3 TYPICAL PVC IN-LINE DRAIN

NTS

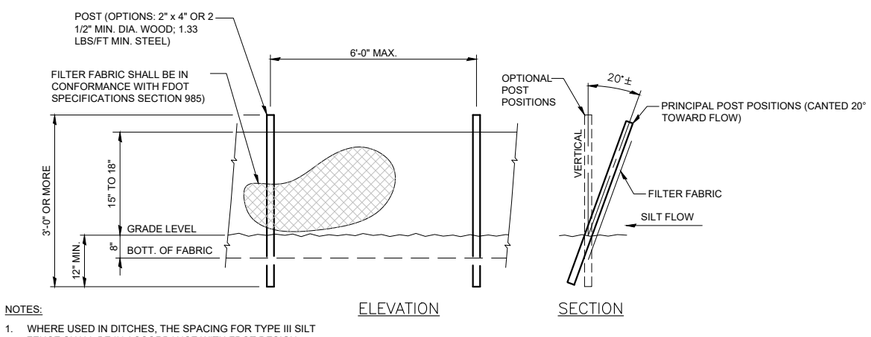

NOTES:

1. WHERE USED IN DITCHES, THE SPACING FOR TYPE III SILT FENCE SHALL BE IN ACCORDANCE WITH FDOT DESIGN STANDARDS, 2010, INDEX NO. 102, SHEET 1 OF 3, CHART NO. 1.
2. INSTALLER MUST BE AN FDEP CERTIFIED AS A SEDIMENT AND EROSION CONTROL PROFESSIONAL.
3. SEE DWG. SWPPP-1 FOR ADDITIONAL REQUIREMENTS.

C / C-1 C-3 TYPE III SILT FENCE

NTS

MITTAUER & ASSOCIATES, INC.
CONSULTING ENGINEERS
580-1 WELLS ROAD, ORANGE PARK, FLORIDA 32073
TEL: (904) 276-0050 FAX: (904) 276-0040 FLORIDA LICENSE: EC-6549

M&A 0801-40-2

NO.	BY	DATE	REVISIONS
6	X	X	X
5	X	X	X
4	X	X	X
3	X	X	X
2	X	X	X
1	X	X	X

DESIGN ENGINEER
JASON R. SHEPLER, P.E.
FLORIDA REGISTRATION NO. 58760

DESIGNER: JRS
DRAWN BY: WJGA
DATE: JUNE 2020
CHECKED BY: MPT
DATE: JUNE 2020

JEA Building Community

HOLIDAY ROAD MASTER PUMP STATION
SPLITTER BOX REPLACEMENT
SITE DETAILS

PROJ. NO. 8006211
DATE: JUNE 2020
SCALE: AS SHOWN

NO. SHEETS 34
SHEET NO. 6
DRAWING NO. C-3

M:\cad files\JEA\0801402 holiday rd master ps splitter box replacement\Design\C3-C4.dwg Current Layout Tab = C-3 Mon Jun 29, 2020 - 15:35

Xrefs Attached=

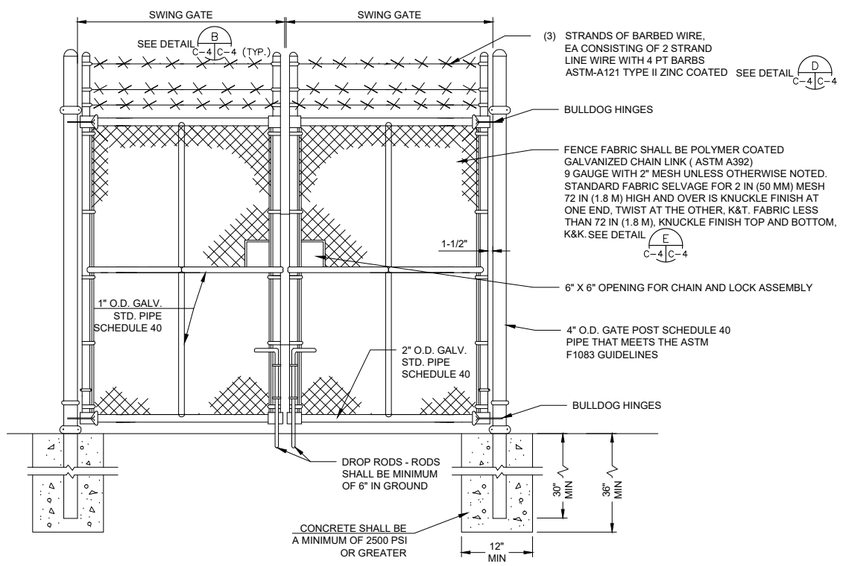

A C-2 C-4 FENCE – DOUBLE SWING GATE

NTS

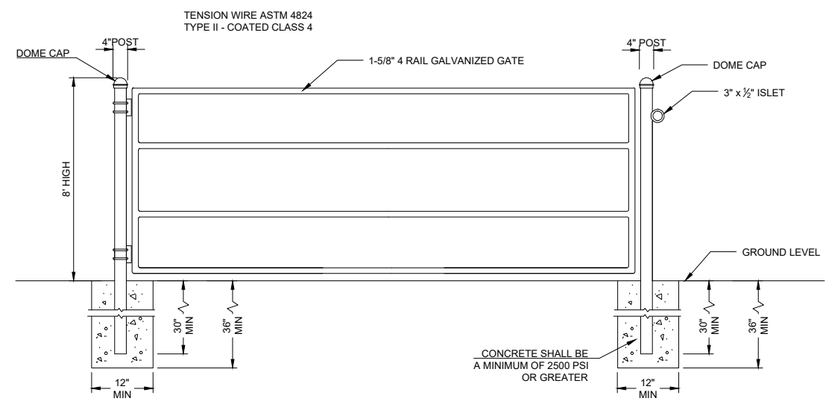

B C-4 C-4 JEA HIGH–SECURITY GATE DETAIL

NTS

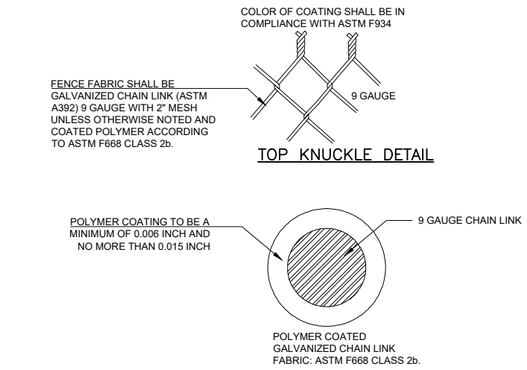

E C-4 C-4 POLYMER COATED CHAINING FENCE DETAIL

NTS

GENERAL

1. UNLESS OTHERWISE NOTED,ALL MATERIALS AND INSTALLATION PROCESSES SHALL CONFORM TO THE CHAINLINK MANUAL (CLFMI-PM-2445)

NOTE:

1. IF THE POLYMER COATING IS DAMAGED DURING INSTALLATION, CONTRACTOR SHALL REPLACE OR REPAIR THE MATERIAL AT OWN EXPENSE.
2. CONTRACTOR SHALL WARRANTY THE POLYMER-COATED GALVANIZED CHAIN LINK FENCE (CLASS 2B) FOR 15 YEARS AGAINST FAILURE DUE TO RUST OR CORROSION.
3. ALL POSTS, BARB WIRE AND ALL FITTINGS SHALL BE VINYL COATED THE SAME AS ON THE FENCING FABRIC.

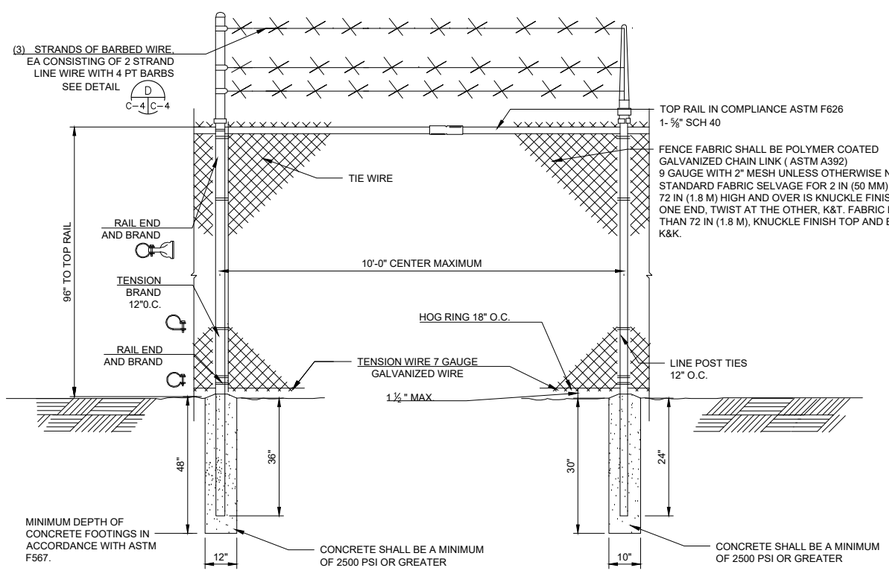

C C-2 C-4 TYPICAL JEA HIGH–SECURITY FENCING DETAIL

NTS

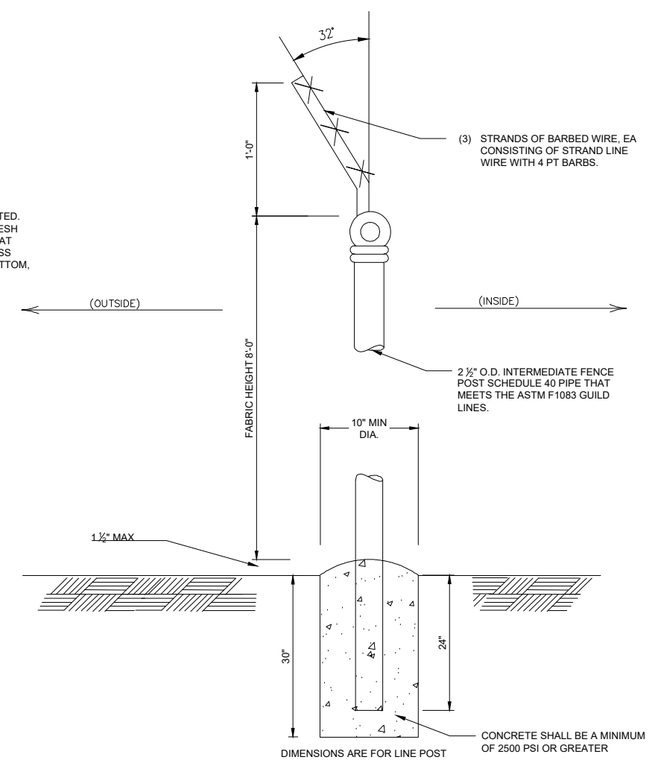

D C-4 C-4 BARB WIRE DETAIL

NTS

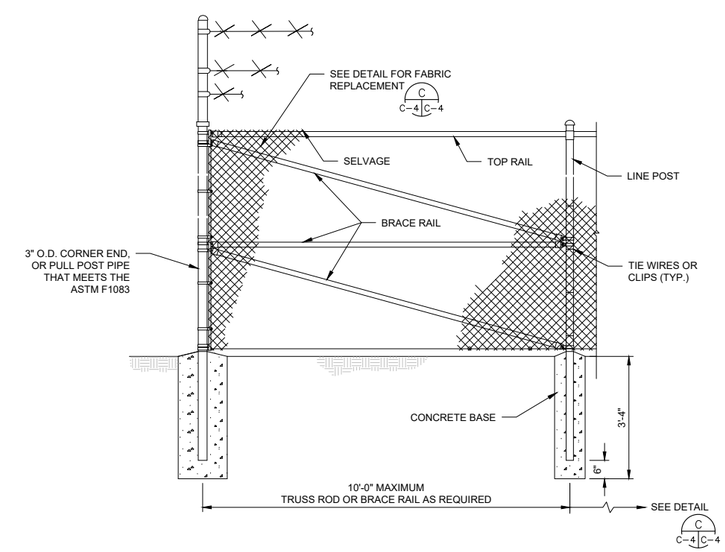

F C-4 C-4 CORNER, END, OR PULL POST DETAIL

NTS

MITTAUER & ASSOCIATES, INC. CONSULTING ENGINEERS
580-1 WELLS ROAD, ORANGE PARK, FLORIDA 32073
TEL: (904) 276-0050 FAX: (904) 276-0840 FLORIDA LICENSE CA-0569
M&A 0801-40-2

NO.	BY	DATE	REVISIONS
6	X	X	X
5	X	X	X
4	X	X	X
3	X	X	X
2	X	X	X
1	X	X	X

DESIGN ENGINEER
JASON R. SHEPLER, P.E.
FLORIDA REGISTRATION NO. 58760

DESIGNER: JRS
DRAWN BY: YG-SA
DATE: JUNE 2020
CHECKED BY: MPT
DATE: JUNE 2020

JEA Building Community

HOLIDAY ROAD MASTER PUMP STATION
SPLITTER BOX REPLACEMENT
SITE DETAILS

PROJ. NO. 8006211
DATE: JUNE 2020
SCALE: NONE

NO. SHEETS 24
SHEET NO. 7
DRAWING NO. C-4

M:\cad files\JEA\0801402 holiday rd master ps splitter box replacement\Design\C3-C4.dwg Current Layout Tab = C-4 Mon Jun 29, 2020 – 15:35

Xrefs Attached=

SUMMARY OF WORK:

The improvements shall be sequenced with JEA to ensure bypass pumping is limited to the minimal time required to complete the staged construction sequencing and typical pump station operations are maintained to the fullest extent possible. The Contractor shall complete necessary shop drawing reviews, JEA scheduling coordination, and ensure all necessary materials are on-site so work can continue in a seamless manner. The anticipated construction sequencing is as follows:

Collection System Modifications & Improvements Prior to Bypass Services

1. Confirm all existing utility locations and process for protecting existing utilities during construction of the improvements.
2. Construct precast Splitter Box with 24" and 30" manual isolation valves, and Bypass Connection No. 2. The Contractor may sequence portions of the Manhole No. 1 activities during this time, but connection to the existing collection system at MH 1 will not occur until Step 1 during Bypass Sequence B.
3. Construct 30" *gravity* bypass pipeline from Splitter Box to MH 2 and MH 3. MH 3 may be set following the 30" connection to the wetwell completed during Bypass Sequence A.
4. Demolish existing substation concrete foundation and construct relocated diesel fuel tank foundation in preparation of fuel tank relocation activities.
5. Upon isolation of the collection system flow from the pump station during either Bypass A or B, the Contractor may begin work on rehabilitating the existing splitter box area. Contractor shall coordinate with the Engineer to finalize the restoration requirements for Wall 1 as designated on the Drawings.

Bypass Sequence A - Wet Pit Modifications
Bypass pumping to Existing 18" FM. See Sheet M-6.

1. The Contractor shall prepare for bypass set-up and complete the pump-out connection modifications shown on the Drawings. Test the bypass pumping system to the existing 18" force main. Upon acceptance of bypass pumping system, the Contractor shall complete the following:
   - 1.1. Construct temporary bulkheads and pipe plug as identified in the Drawings to isolate the area where the 30" concrete wall coring will occur. These bulkheads will remain while the existing splitter box is repaired and normal flows diverted to the 30" gravity bypass following Bypass Sequence B.
   - 1.2. Construct 30" *gravity* piping connection to basement and complete assembly of the 30" *gravity* bypass piping connection including Manholes No. 2 and No. 3.
   - 1.3. Construct various wet pit improvements shown on the Drawings including but not limited to: pony pump suction piping; handrail removal and replacement; out of service piping removal; wet well debris and grit removal; slide gate removal and replacement; generator SCADA enhancements, and concrete repairs. The PLC and various SCADA improvements shall be coordinated with JEA and completed at this time.
2. Relocate Diesel Fuel Tank during Bypass Sequence A. The concrete foundation shall be prepared prior to Sequence A so it is prep'd and ready for tank relocation. Following relocation, test the fuel pumping system for functionality and operational resiliency.
3. Immediately following completion of the wet pit improvements and acceptance by JEA. Convert to Bypass Sequence B to make final connections to the existing collection system and begin operation of the 30" gravity bypass.

Bypass Sequence B - Collection System Modifications
Bypass pumping to 30" gravity bypass system via MH 2. See Sheet M-6.

1. Once Manhole No. 1 is ready to accept the connection to the existing collection system and approved by JEA, coordinate with JEA to sequence movement of wastewater from the bypass system to the 30" collection system connection to the Splitter Box. The 24" gate valves shall remain closed during these operations and the 30" gate valve shall be opened. Once the 30" *gravity* bypass connection is operational and approved by JEA, Bypass Pumping Sequence B can be shut down and the 30" *gravity* sewer bypass system can be utilized to continue bypass of the existing splitter box area for rehabilitation and construction of the 24" gravity pipelines.

- The pavement restoration shall be sequenced by the Contractor based on their logistical needs. Final paving shall not occur until the yard piping and site modifications are completed.
- The roofing removal and replacement activities shall be sequenced by the Contractor based on their logistical needs. The modifications shall be completed prior to final paving activities.
- The interior lighting and miscellaneous improvements (i.e., louver repairs, window removal, etc.) outside of the wetpit area may be sequenced by the Contractor based on their logistical needs.
- The Contractor shall carefully review the Drawings and Technical Specifications for detailed requirements.

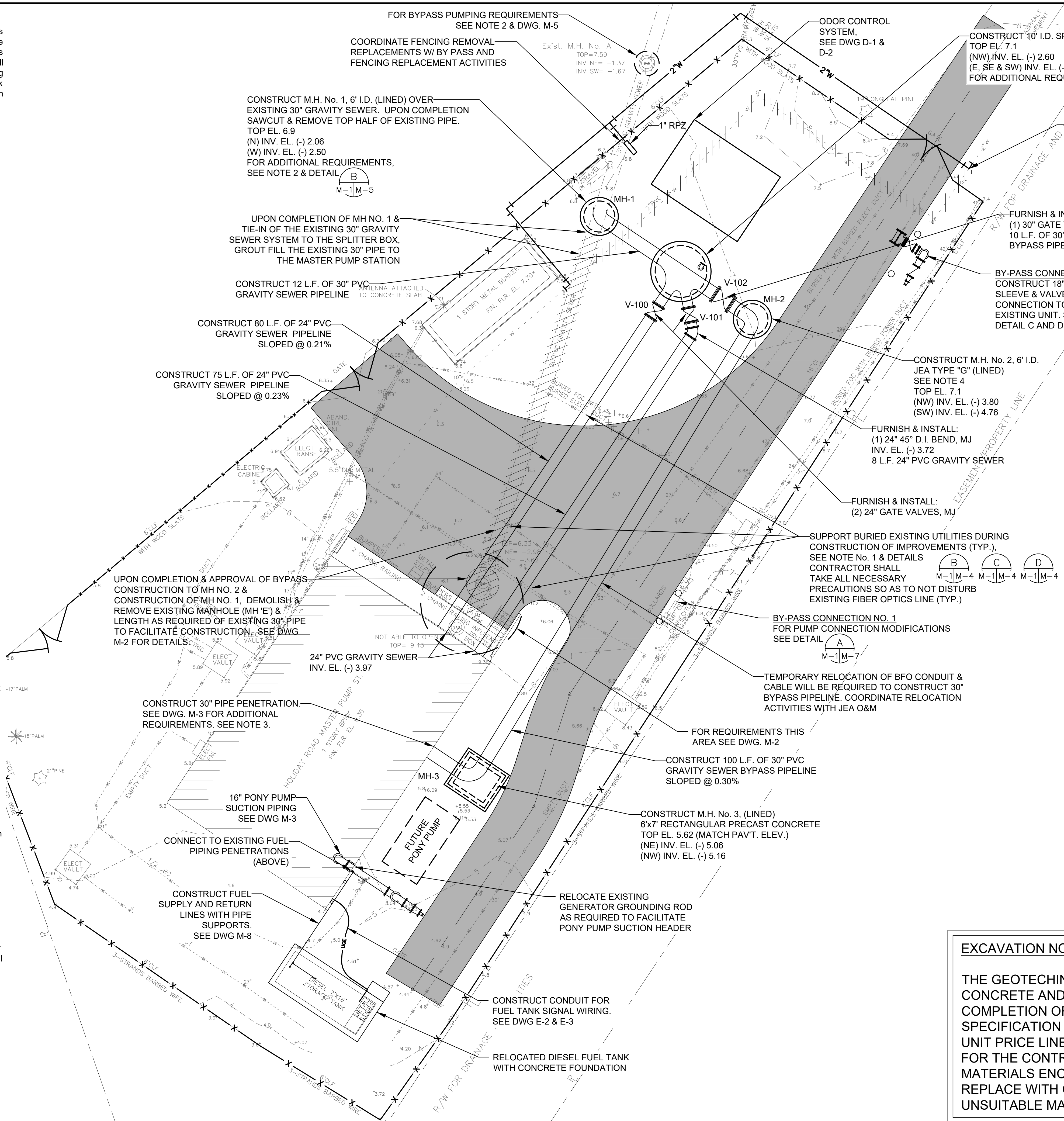

NOTES:

1. THE TWO 24" INFLUENT AND ONE 30" PIPELINES WILL CROSS BENEATH THE ACTIVE 18" FORCE MAIN, FO DUCT, & 26.4 KVA ELECTRICAL DUCT BANK. BOTH FACILITIES MUST REMAIN IN SERVICE AND THE CONTRACTOR SHALL PROVIDE TEMPORARY SHORING TO SUPPORT ALL EXISTING FACILITIES DURING CONSTRUCTION OF THE IMPROVEMENTS.
2. UPON COMPLETION OF THE M.H. No. 1 BASE, RISER SECTIONS AND ASSOCIATED COMPONENTS ALONG WITH THE SPLITTER BOX AND 30" BYPASS PIPING RUN TO THE MASTER PUMP STATION, THE CONTRACTOR SHALL FURNISH & INSTALL A BYPASS PUMPING SYSTEM. SEE DWG. M-6 AND TECHNICAL SPECIFICATION SECTION 15200 FOR ADDITIONAL REQUIREMENTS. SEE SUMMARY OF WORK NOTES RELATED TO BYPASS SEQUENCING FOR THE CONTRACTOR'S REVIEW.
3. RELOCATE DIESEL FUEL TANK PRIOR TO 30" PIPING CONNECTION AND DURING BYPASS SEQUENCE A.
4. MODIFY THE STANDARD BOTTOM SLAB TO PROVIDE 8" OFFSET FROM OUTER DIAMETER OF MANHOLE FOR SOIL OVERBURDEN ON STRUCTURE.

EXCAVATION NOTE

THE GEOTECHINCAL EXPLORATION ENCOUNTERED CONCRETE AND CONSTRUCTION DEBRIS DURING COMPLETION OF THE SOIL BORINGS. SEE SPECIFICATION SECTION 02220 FOR SITE FINDINGS. A UNIT PRICE LINE ITEM IS PROVIDED IN THE BID FORM FOR THE CONTRACTOR TO EXCAVATE ALL UNSUITABLE MATERIALS ENCOUNTERED DURING CONSTRUCTION, REPLACE WITH CLEAN FILL, AND DISPOSE OF THE UNSUITABLE MATERIALS OFFSITE.

MITTAUER & ASSOCIATES, INC. CONSULTING ENGINEERS
580-1 WELLS ROAD, ORANGE PARK, FLORIDA 32073
TEL (904) 278-0030 FAX (904) 278-0840 FLORIDA C.A.#5569
M&A 0801-40-2

NO.	BY	DATE	REVISIONS
6.	X	X	X
5.	X	X	X
4.	X	X	X
3.	X	X	X
2.	X	X	X
1.	X	X	X

DESIGN ENGINEER
JASON R. SHEPLER, P.E.
FLORIDA REGISTRATION NO. 58760

DESIGNER:	JRS	
DRAWN BY:	YPJ/SA	
DATE:	JUNE 2020	
CHECKED BY:	MPT	
DATE:	JUNE 2020	

JEA Building Community

HOLIDAY ROAD MASTER PUMP STATION SPLITTER BOX REPLACEMENT DEMOLITION & YARD PIPING PLAN

PROJ. NO.	8006211
DATE:	JUNE 2020
SCALE:	AS SHOWN
NO. SHEETS	34
SHEET NO.	8
DRAWING NO.	M-1

M:\cad files\JEA\0801402 holiday rd master ps splitter box replacement\Design\C1-C2-M1.dwg Current Layout Tab = M-1 Mon Jun 29, 2020 - 15:35
Xrefs Attached=

NOTES

FOLLOWING REMOVAL OF THE TEMPORARY DECK, THE CONTRACTOR SHALL SECURE THE SERVICES OF A STATE OF FLORIDA AND ASNT (AMERICAN SOCIETY OF NONDESTRUCTIVE TESTING) CERTIFIED LICENSED NON-DESTRUCTIVE TESTING (NDT) FIRM TO ASSIST WITH THE FOLLOWING ACTIVITIES:

1. CONTRACTOR SHALL CLEAN AND RESTORE CONCRETE AREA TO RECEIVE SHELF ANGLE. SHELF ANGLE MUST BE INSTALLED PRIOR TO PROCEEDING WITH THE REMAINDER OF THE RESTORATION WORK.
2. CONTRACTOR SHALL REMOVE ALL EXISTING SOFT MATERIAL (I.E., CONCRETE THAT CAN BE MANUALLY REMOVED PER SSPC-SP2) FROM THE INTERIOR-SIDE OF THE STRUCTURE'S WALLS AND FLOOR UNTIL " SOLID" CONCRETE IS EXPOSED. THE SOFT MATERIAL THAT IS REMOVED FROM THE WALLS AND/OR FLOOR SHALL BE DISPOSED OFFSITE BY THE CONTRACTOR IN ACCORDANCE WITH FEDERAL, STATE, AND LOCAL LAWS.
3. FOLLOWING THE SSPC-SP2 REMOVAL, THE CONTRACTOR SHALL COMPLETE A 'COMMERCIAL BLAST CLEANING' IN ACCORDANCE WITH SSPC-SP13 OF THE INTERIOR-SIDE OF THE STRUCTURE'S WALLS AND FLOOR. THE BLASTING PRESSURE SHALL BE COORDINATED WITH THE ENGINEER AND THE CONTRACTOR'S NDT CONSULTANT. ALL WATER, SAND, AND LOOSE MATERIAL REMAINING AFTER THE CLEANING SHALL BE DISPOSED OFFSITE BY THE CONTRACTOR IN ACCORDANCE WITH FEDERAL, STATE, AND LOCAL LAWS.
4. AFTER THE STRUCTURE HAS BEEN CLEANED AND DRIED OUT, THE ENGINEER SHALL INSPECT THE STRUCTURE WITH THE NDT CONSULTANT. FOLLOWING THE INSPECTION, AGREED LOCATIONS FOR THE WINDSOR HP PROBE TESTING (ASTM 803) SHALL BE DETERMINED. A MINIMUM OF FIVE TESTS WILL BE COMPLETED AND UP TO TEN TESTS WILL BE AVAILABLE FOR USE ON THE STRUCTURE AS DEFINED IN THE BID FORM. THE TESTING WILL DEFINE THE COMPRESSIVE STRENGTH OF THE REMAINING CONCRETE.
5. THE NDT CONSULTANT WILL PRODUCE A WRITTEN & SEALED REPORT BY A STATE OF FLORIDA, LICENSED ENGINEER DEFINING THE COMPRESSIVE STRENGTH OF THE CONCRETE AND RECOMMENDATIONS RELATED TO CONCRETE REPAIR REQUIREMENTS.
6. THE ENGINEER WILL REVIEW THE NDT REPORT, AND DEFINE THE TYPE OF REPAIR REQUIRED PURSUANT TO JEA'S WATER & WASTEWATER STANDARDS SECTION 488 (TYPE 'A', 'B', 'C', AND/OR 'D'). THE BID FORM DEFINES UNIT COSTS FOR DIFFERENT REPAIR REQUIREMENTS AS WELL AS ADDITIONAL CONCRETE REMOVAL UNIT PRICES SHOULD THE TESTING IDENTIFY WEAK CONCRETE THAT MUST BE REMOVED BY MECHANICAL MEANS SUCH AS CHIPPING, SAWING, ETC.
7. DESIGN, FURNISH & INSTALL TEMPORARY BULKHEAD AND PLUG INTERNAL 24" BYPASS PIPE PRIOR TO THE 30" CONCRETE CORE.
8. AFTER THE 30" BYPASS CONNECTION IS COMPLETE, THE CONTRACTOR SHALL REMOVE THE 24" PIPE PLUG AND INITIATE BYPASS PUMPING SEQUENCE B. ONCE THE BYPASS IS OPERATIONAL AND APPROVED FOR ONGOING OPERATION, THE CONTRACTOR SHALL DESIGN, FURNISH & INSTALL TEMPORARY BULKHEAD OR STOP LOG GATE No. 1.

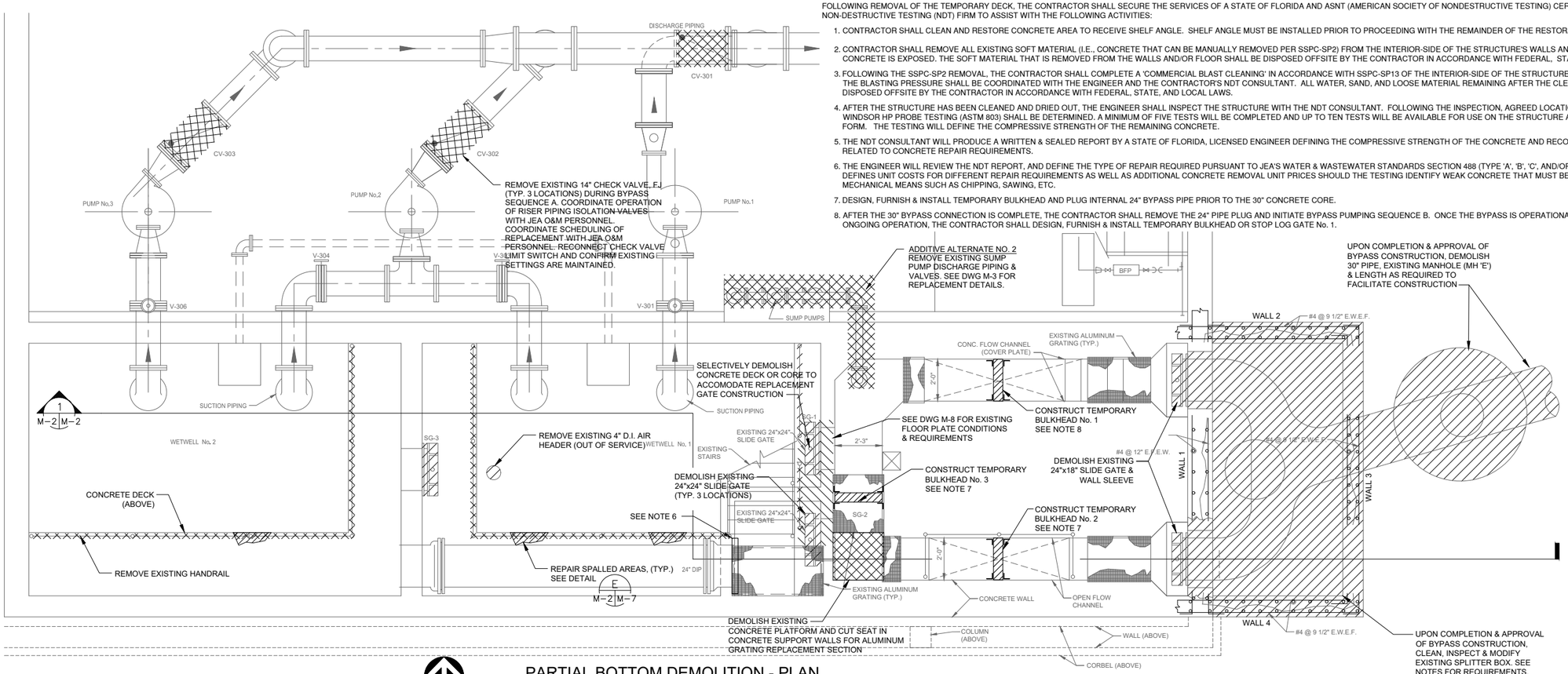

PARTIAL BOTTOM DEMOLITION - PLAN

SCALE: 3/8" = 1'-0"

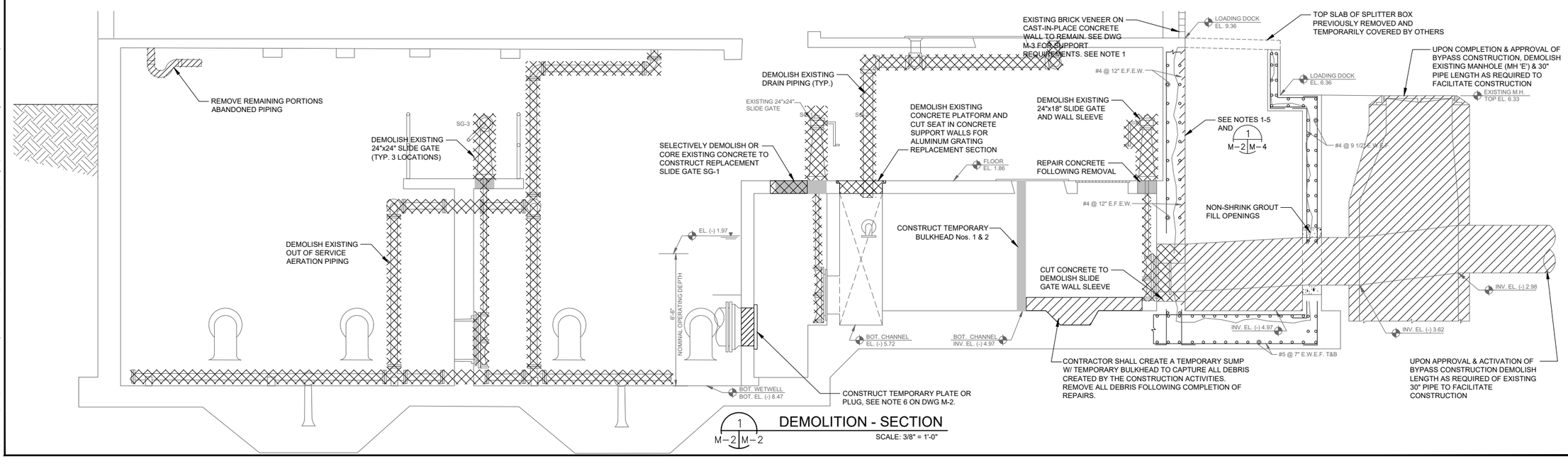

DEMOLITION - SECTION

1 M-2 M-2

SCALE: 3/8" = 1'-0"

MITTAUER & ASSOCIATES, INC.
CONSULTING ENGINEERS
580-1 WELLS ROAD, ORANGE PARK, FLORIDA 32073
TEL: (904) 276-0350 FAX: (904) 276-0340
COMM. LICENSE CA-0549

NO.	BY	DATE	REVISIONS
6	X	X	X
5	X	X	X
4	X	X	X
3	X	X	X
2	X	X	X
1	X	X	X

M&A 0801-40-2

DESIGN ENGINEER
JASON R. SHEPLER, P.E.
FLORIDA REGISTRATION NO. 56760

DESIGNER: JRS
DRAWN BY: WJ-SA
DATE: JUNE 2020
CHECKED BY: MPT
DATE: JUNE 2020

JEA Building Community

HOLIDAY ROAD MASTER PUMP STATION
SPLITTER BOX REPLACEMENT
DEMOLITION PLAN & SECTION

PROJ. NO. 800621
DATE: JUNE 2020
SCALE: AS SHOWN

NO. SHEETS IN SET 9
SHEET NO. 9
DRAWING NO. M-2

M:\cad files\JEA\0801402 holiday rd master ps splitter box replacement\Design\M2-M3-M4.dwg Current Layout Tab = M-2 Mon Jun 29, 2020 - 15:36
Xrefs Attached= C1-C2-M1 [.\C1-C2-M1.dwg]

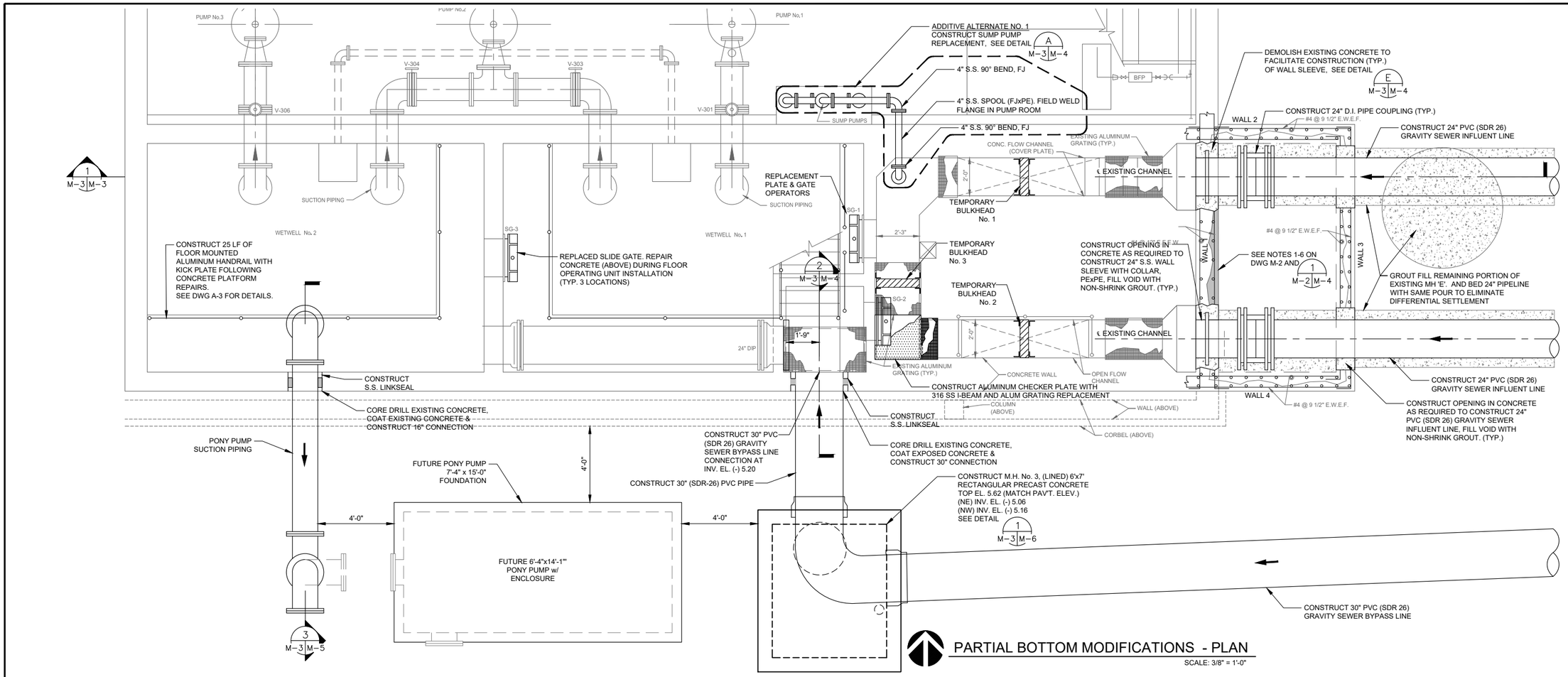

PARTIAL BOTTOM MODIFICATIONS - PLAN

SCALE: 3/8" = 1'-0"

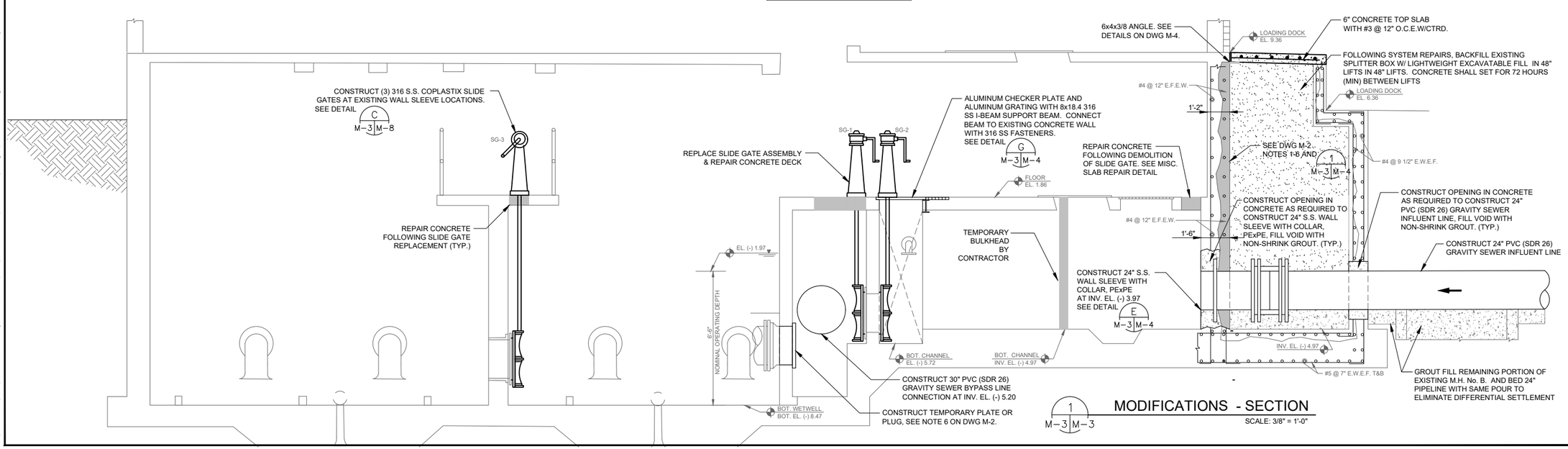

MODIFICATIONS - SECTION

SCALE: 3/8" = 1'-0"

MITTAUER & ASSOCIATES, INC.
CONSULTING ENGINEERS
580-1 WELLS ROAD, ORANGE PARK, FLORIDA 32073
TEL: (904) 276-0350 FAX: (904) 276-0340 FLORIDA LICENSE CA-6549

NO.	BY	DATE	REVISIONS
6	X	X	X
5	X	X	X
4	X	X	X
3	X	X	X
2	X	X	X
1	X	X	X

M&A 0801-40-2

DESIGN ENGINEER
JASON R. SHEPLER, P.E.
FLORIDA REGISTRATION NO.
56760

DESIGNER: JRS
DRAWN BY: WJ-SA
DATE: JUNE 2020
CHECKED BY: MPT
DATE: JUNE 2020

JEA Building Community

HOLIDAY ROAD MASTER PUMP STATION
SPLITTER BOX REPLACEMENT
MODIFICATION PLAN & SECTIONS

PROJ. NO. 8006211
DATE: JUNE 2020
SCALE: AS SHOWN

NO. SHEETS 34
SHEET NO. 10
DRAWING NO. M-3

M:\cad files\JEA\0801402 holiday rd master ps splitter box replacement\Design\M2-M3-M4.dwg Current Layout Tab = M-3 Mon Jun 29, 2020 - 15:36

Xrefs Attached= C1-C2-M1 [.\C1-C2-M1.dwg]

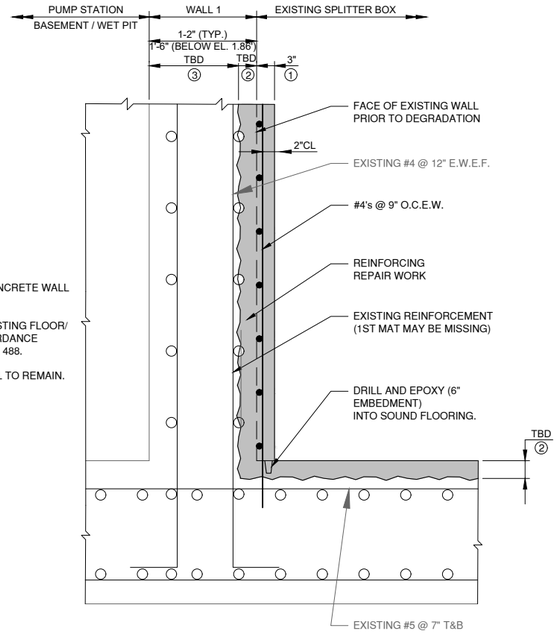

NOTES:

1. PROPOSED CONCRETE WALL SECTION.
2. REPAIR OF EXISTING FLOOR/ WALL IN ACCORDANCE WITH JEA SPEC 488.
3. EXISTING WALL TO REMAIN.

1 / M-2 M-4 WALL 1 REPAIR AT SPLITTER BOX - SECTION

1"= 1'-0"

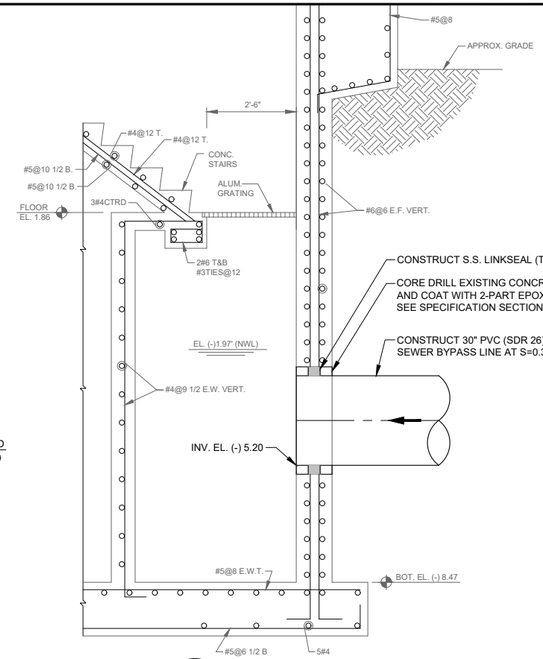

2 / M-3 M-4 BYPASS LINE - SECTION

1/2"= 1'-0"

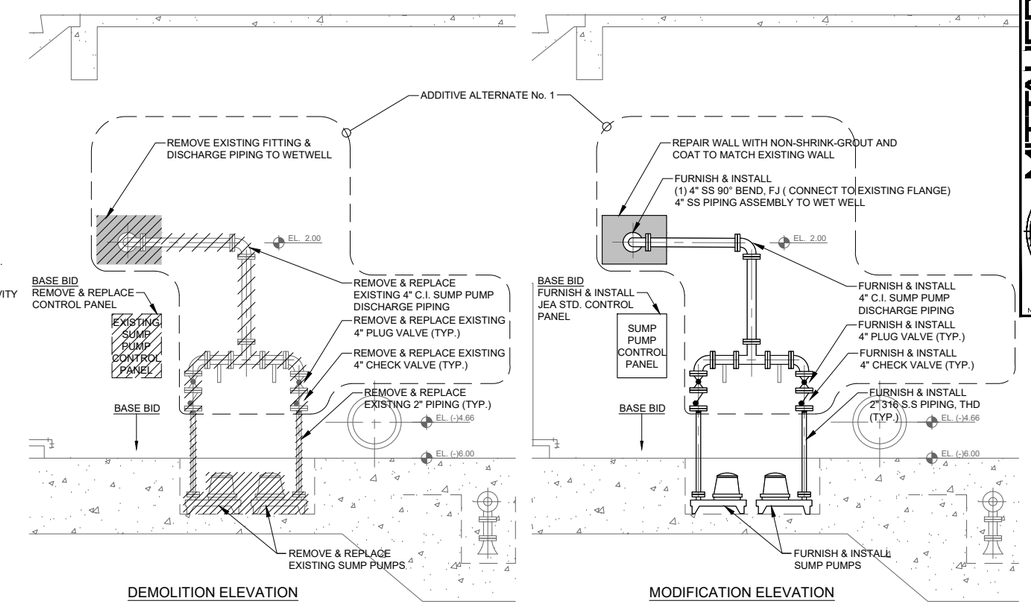

A / M-3 M-4 SUMP PUMP SYSTEM ELEVATION

3/8" = 1'-0"

NOTE:

JEA O & M PERSONNEL WILL EVALUATE THE EXISTING PIPING CONDITIONS DURING BYPASS SEQUENCE A. IF ADDITIVE ALTERNATE NO. 1 IS NOT SELECTED, THE EXSITING PIIPNG SHALL REMAIN AND ONLY THE 2" SS PIPES REPLACED.

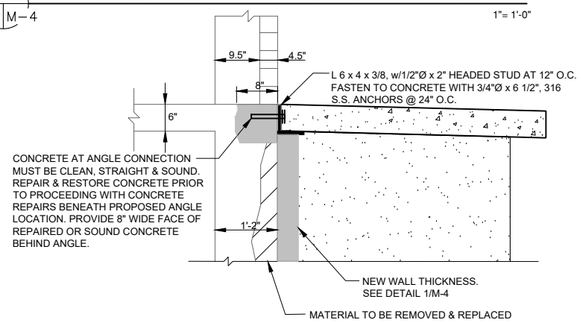

BRICK VENEER SUPPORT DETAIL

N.T.S

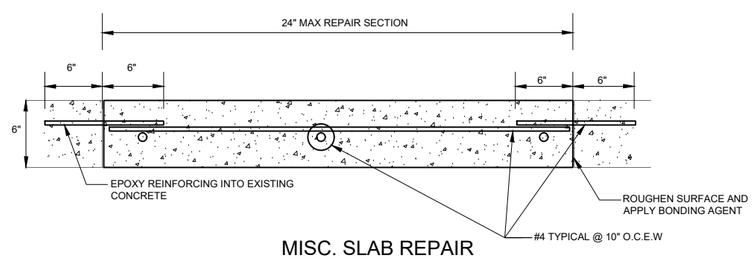

MISC. SLAB REPAIR

N.T.S

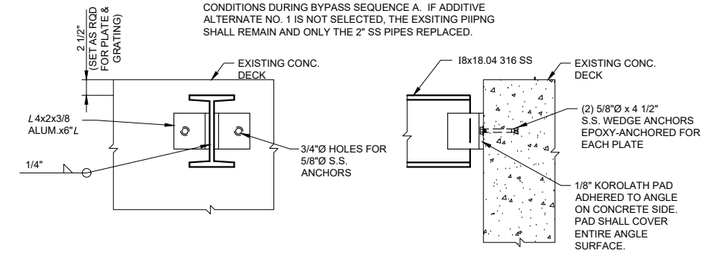

G / M-3 M-4 DETAIL

1 1/2"=1'-0"

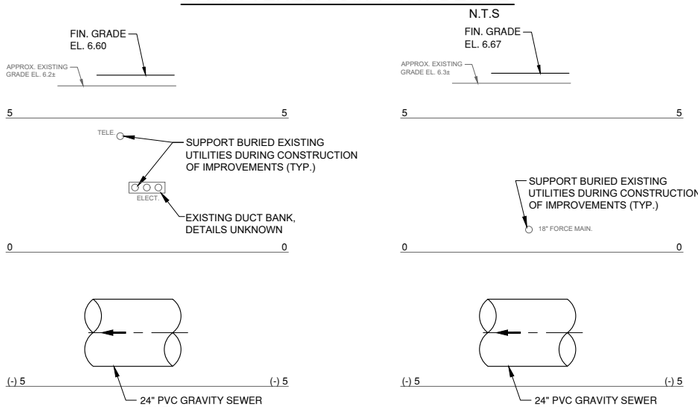

B / M-1 M-4 UTILITIES CROSSING DETAIL

3/8" = 1'-0"

C / M-1 M-4 UTILITY CROSSING DETAIL

3/8" = 1'-0"

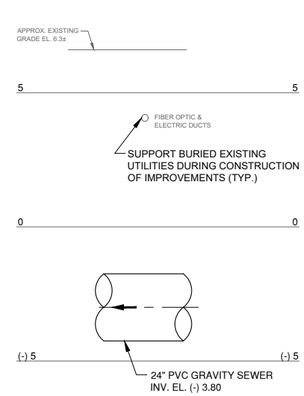

D / M-1 M-4 UTILITY CROSSING DETAIL

3/8" = 1'-0"

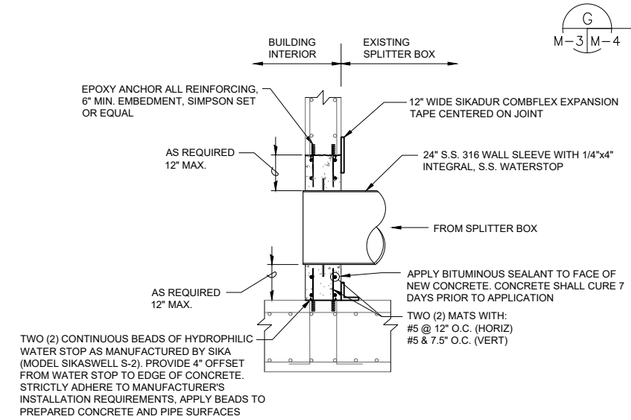

E / M-3 M-4 WALL PENETRATION - DETAIL

1/2" = 1'-0"

NOTES:

1. ALL ADDED BARS SHALL BE SAME DIAMETER AND GRADE AS THOSE INTERRUPTED.
2. BARS LAID PARALLEL TO MAIN STEEL SHALL BE CONTINUOUS BETWEEN SUPPORTS. DIAGONAL BARS SHALL BE DIAGONAL WIDTH OF OPENING PLUS 60 BAR DIAMETERS EACH SIDE.
3. PROVIDE TWO (2) DIAGONAL BARS EACH CORNER AND EACH MAT.
4. PROVIDE SAME NUMBER OF PARALLEL BARS AS THOSE INTERRUPTED IN EACH DIRECTION AND ROUND UP TO THE NEXT EVEN NUMBER. DIVIDE BARS EQUALLY ON EACH SIDE OF OPENING.

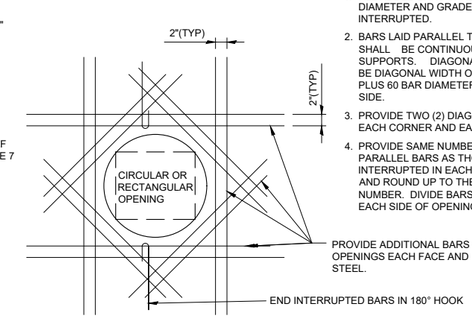

F / M-4 M-4 TYPICAL WALL OPENING - DETAIL

NTS

MITTAUER & ASSOCIATES, INC. CONSULTING ENGINEERS
580-1 WELLS ROAD, ORANGE PARK, FLORIDA 32073
TEL: (904) 276-0850 FAX: (904) 276-0840 FLORIDA LICENSE: EC-8569

M&A 0801-40-2

NO.	BY	DATE	REVISIONS
6	X	X	X
5	X	X	X
4	X	X	X
3	X	X	X
2	X	X	X
1	X	X	X

DESIGN ENGINEER
JASON R. SHEPLER, P.E.
FLORIDA REGISTRATION NO. 58760

DESIGNER: JRS
DRAWN BY: WJGA
DATE: JUNE 2020
CHECKED BY: MPT
DATE: JUNE 2020

JEA Building Community

HOLIDAY ROAD MASTER PUMP STATION
SPLITTER BOX REPLACEMENT
SECTIONS & DETAILS

PROJ. NO. 8006211
DATE: JUNE 2020
SCALE: AS SHOWN

NO. SHEET'S 34
SHEET NO. 11
DRAWING NO. M-4

M:\cad files\JEA\0801402 holiday rd master ps splitter box replacement\Design\M2-M3-M4.dwg Current Layout Tab = M-4 Mon Jun 29, 2020 - 15:36
Xrefs Attached= C1-C2-M1 [.\C1-C2-M1.dwg]

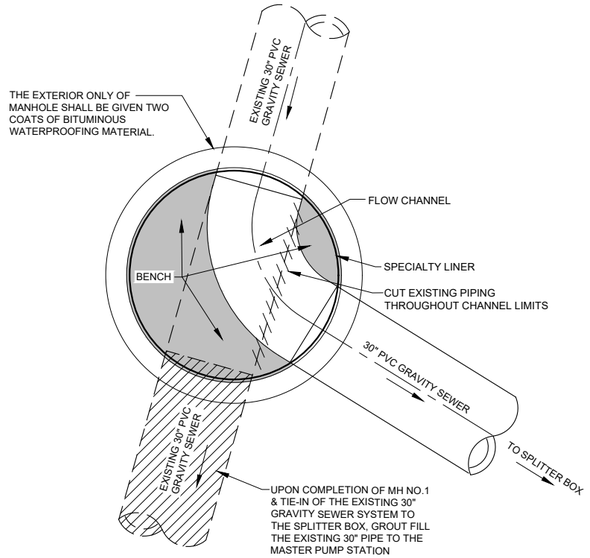

BOTTOM PLAN
1/2"=1'-0"

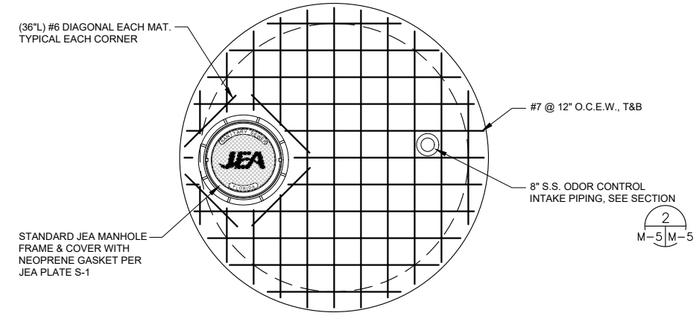

TOP SLAB REINFORCING PLAN
A M-5 M-5 — 3/8"=1'-0"

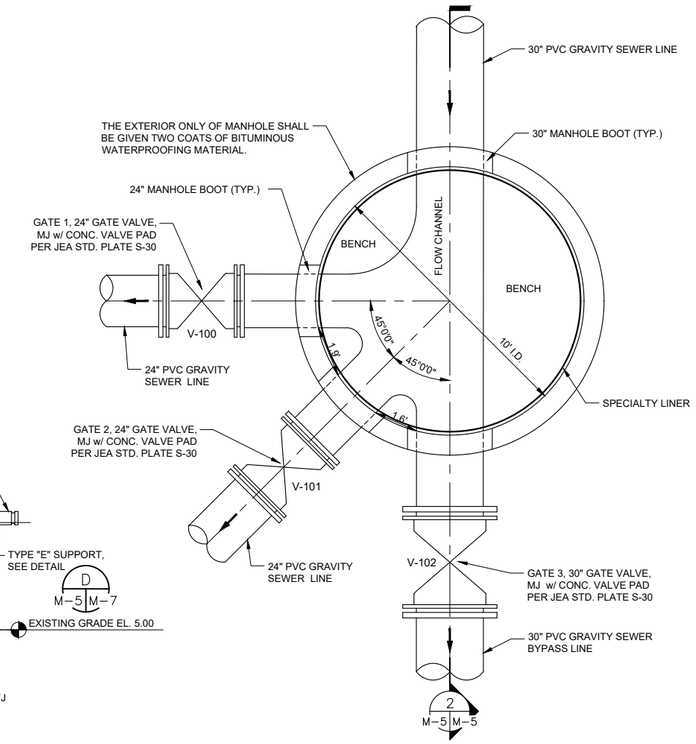

SPLITTER BOX - ENLARGED PLAN
A M-1 M-5 — 3/8" = 1'-0"

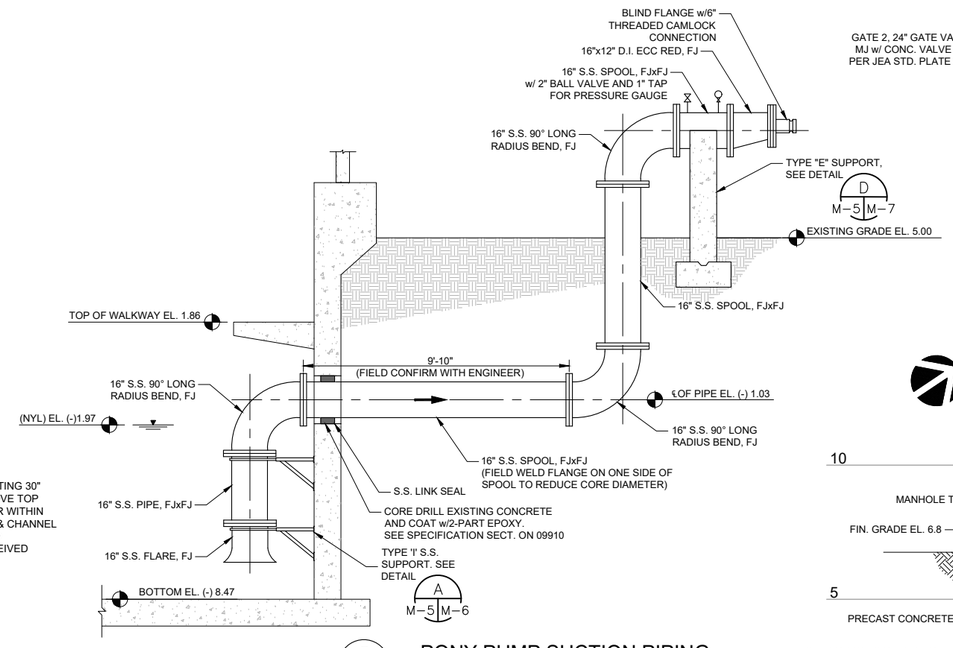

PONY PUMP SUCTION PIPING
3 M-3 M-5 — 3/8" = 1'-0"

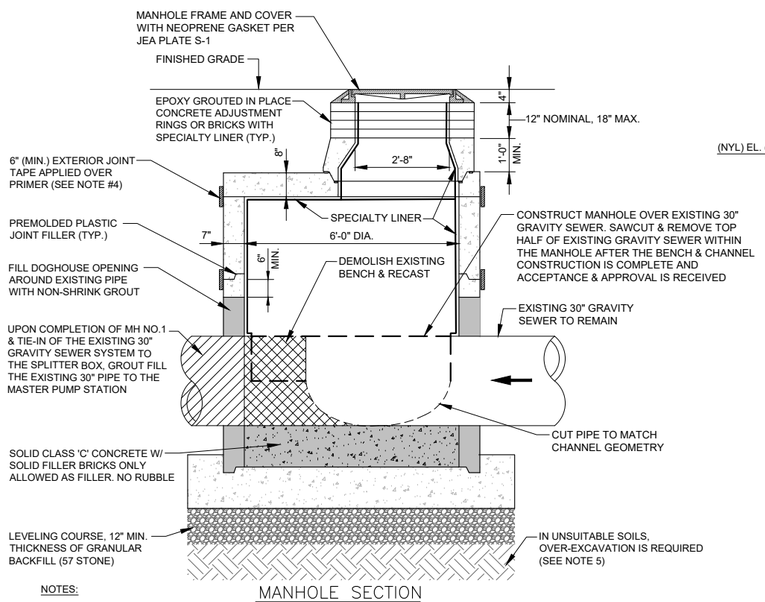

MANHOLE SECTION

NOTES:

1. PRECAST MANHOLE SECTIONS TO BE MANUFACTURED IN ACCORDANCE WITH THE LATEST EDITIONS OF A.S.T.M. C-478 WITH 4000 LB. CONC., TYPE II CEMENT. ALL LIFTING HOLES AND OUTSIDE INSERTS SHALL BE FILLED WITH NON-SHRINK GROUT AND COATED WITH BITUMINOUS WATERPROOFING MATERIAL.
2. THE EXTERIOR ONLY OF MANHOLE SHALL BE GIVEN TWO COATS OF BITUMINOUS WATERPROOFING MATERIAL.
3. SPECIALTY LINER IS TO BE INSTALLED ON INSIDE SURFACE OF MANHOLE IN ACCORDANCE WITH AS-602, THEREFORE, THE BITUMINOUS WATERPROOFING SHALL BE OMITTED ON INSIDE.
4. ALL M/H JOINTS BELOW THE TOP CONE SECTION SHALL INCLUDE A 6" WIDE (MIN) EXTERIOR JOINT TAPE (W/PRIMER). TAPE ON THE CONE SECTION IS OPTIONAL.
5. IN SILTS, CLAY OR HIGHLY ORGANIC SOILS (FINE-GRAINED SOILS INCLUDING SOIL GROUPS ML, CL, OL, MH, CH, OH AND PT) THE SOILS SHALL BE OVER-EXCAVATED AN ADDITIONAL 24" (AT A MIN.) AND BACKFILLED WITH AASHTO CLASS A-3 SOIL (COMPACTED TO 98%, ASTM D1557) OR OVER-EXCAVATE AN ADDITIONAL 12" (AT A MIN.) AND BACKFILL WITH GRANULAR BACKFILL (57 STONE).

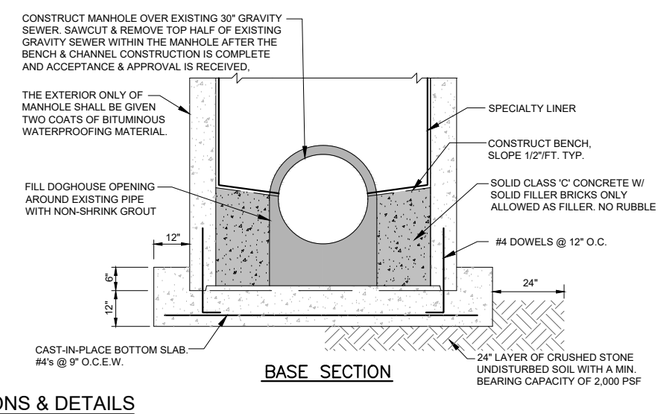

BASE SECTION

MH NO. 1 - "DOGHOUSE" SECTIONS & DETAILS
B M-1 M-5 — 1/2"=1'-0"

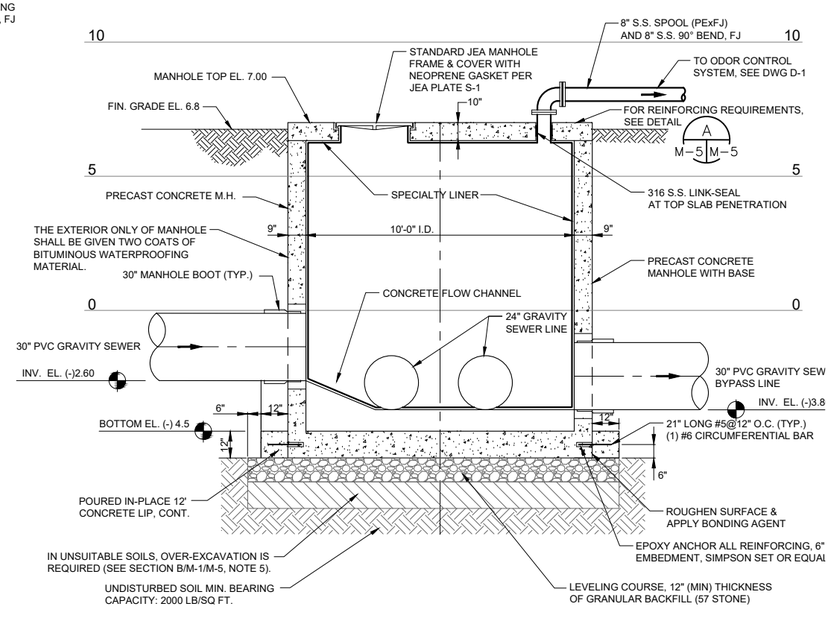

SECTION
2 M-5 M-5 — 3/8" = 1'-0"

MITTAUER & ASSOCIATES, INC.
CONSULTING ENGINEERS
580-1 WELLS ROAD, ORANGE PARK, FLORIDA 32073
TEL: (904) 276-0350 FAX: (904) 276-0340 FLORIDA LICENSE: CA-6569

NO.	BY	DATE	REVISIONS
6	X	X	X
5	X	X	X
4	X	X	X
3	X	X	X
2	X	X	X
1	X	X	X

M&A 0801-40-2

DESIGN ENGINEER
JASON R. SHEPLER, P.E.
FLORIDA REGISTRATION NO. 56760

DESIGNER: JRS
DRAWN BY: VFJ/SA
DATE: JUNE 2020
CHECKED BY: MPT
DATE: JUNE 2020

JEA Building Community

HOLIDAY ROAD MASTER PUMP STATION
SPLITTER BOX REPLACEMENT
SPLITTER BOX - PLANS, SECTION & DETAIL

PROJ. NO. 800/211
DATE: JUNE 2020
SCALE: AS SHOWN

NO. SHEETS 34
SHEET NO. 12
DRAWING NO. M-5

M:\cad files\JEA\0801402 holiday rd master ps splitter box replacement\Design\M5.dwg Current Layout Tab = M-5 Mon Jun 29, 2020 - 15:36
Xrefs Attached=

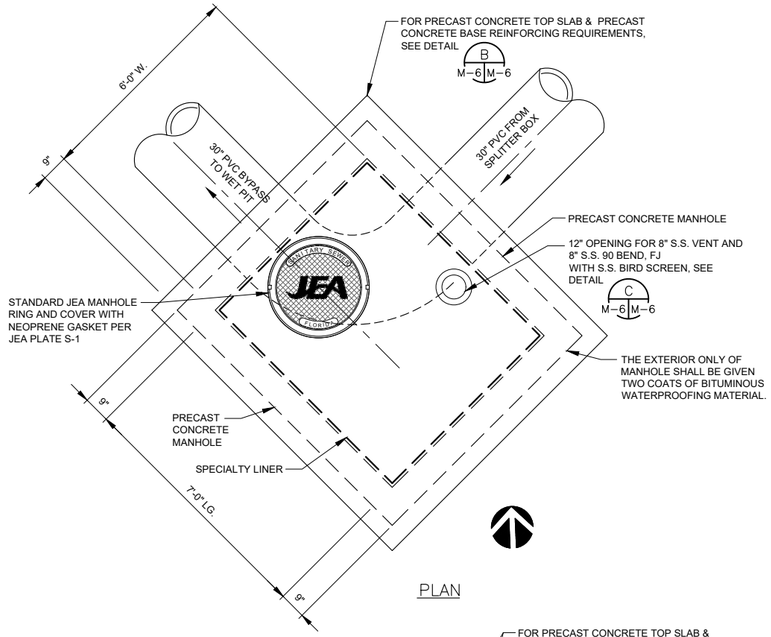

PLAN

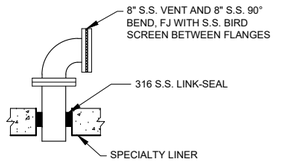

C M-6 M-6 VENT PIPE DETAIL 1/2"=1'-0"

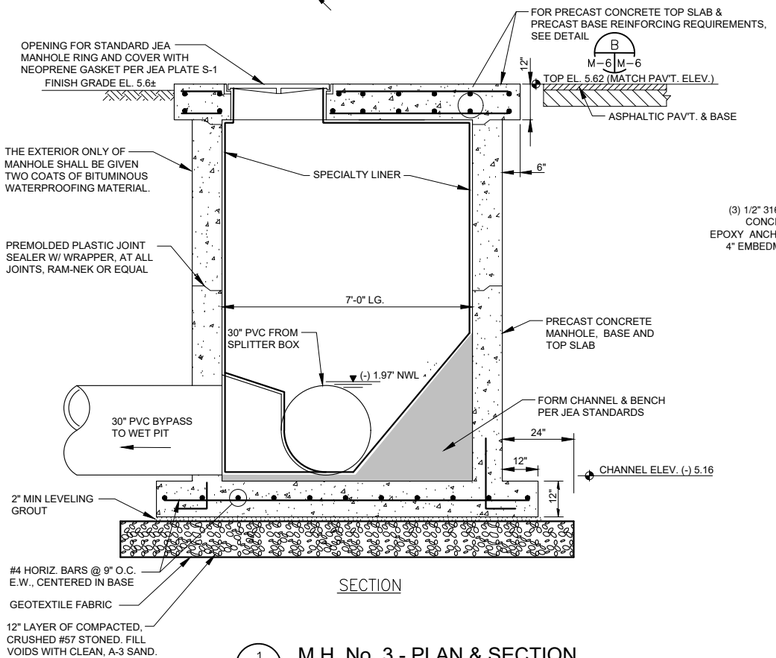

SECTION

1 M-3 M-6 M.H. No. 3 - PLAN & SECTION 1/2"=1'-0"

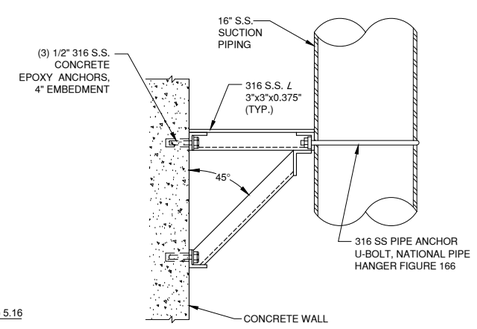

SIDE VIEW

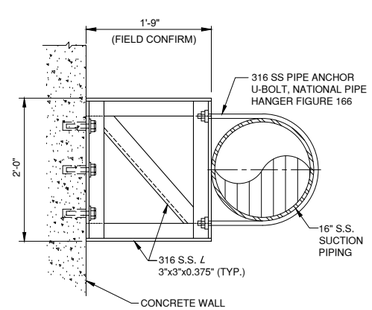

PLAN

A M-5 M-6 TYPE "I" PIPE SUPPORT ALL MATERIALS SHALL BE 316 S.S. NTS

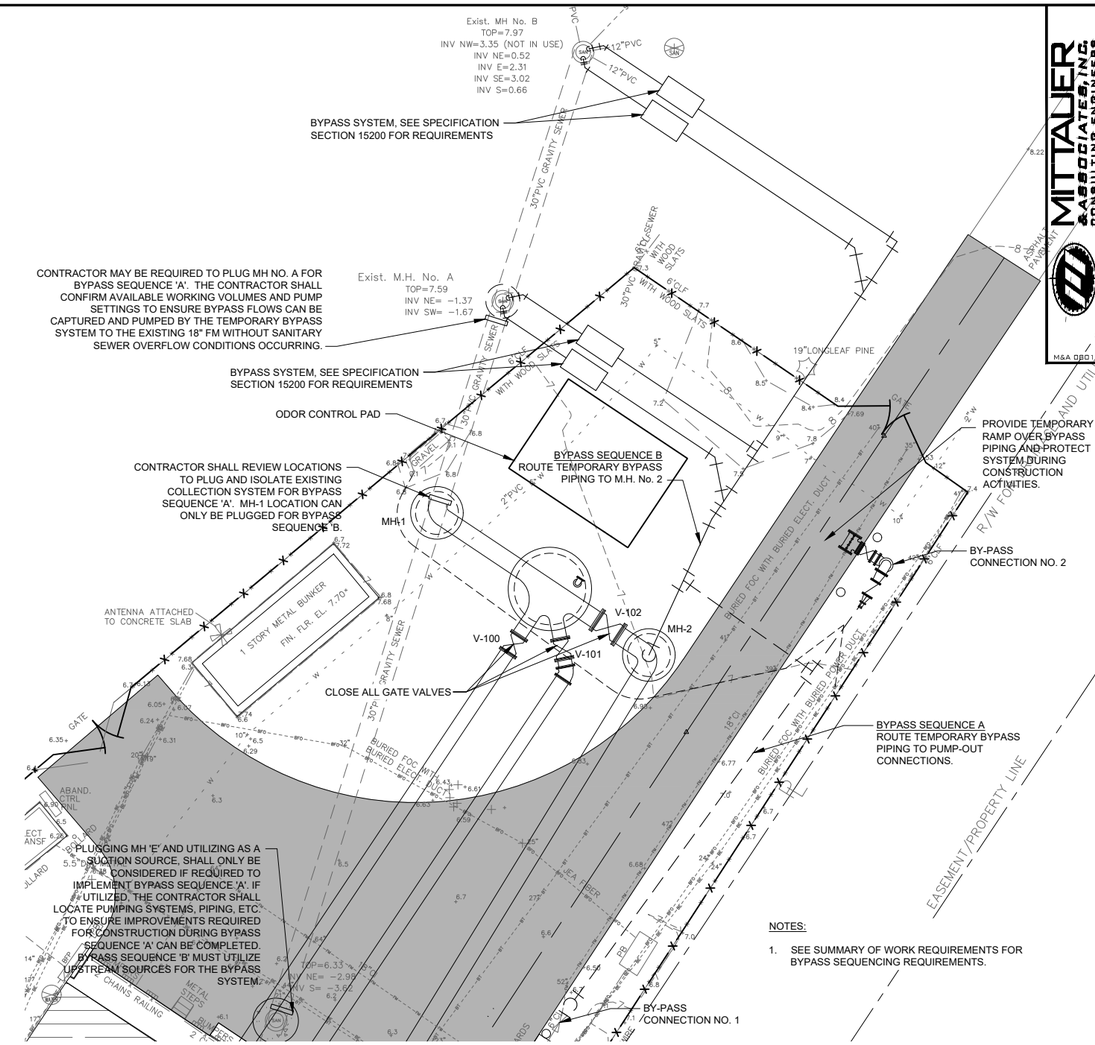

NOTES:

1. SEE SUMMARY OF WORK REQUIREMENTS FOR BYPASS SEQUENCING REQUIREMENTS.

3 M-6 M-6 BYPASS CONCEPT PLAN 1"=10'

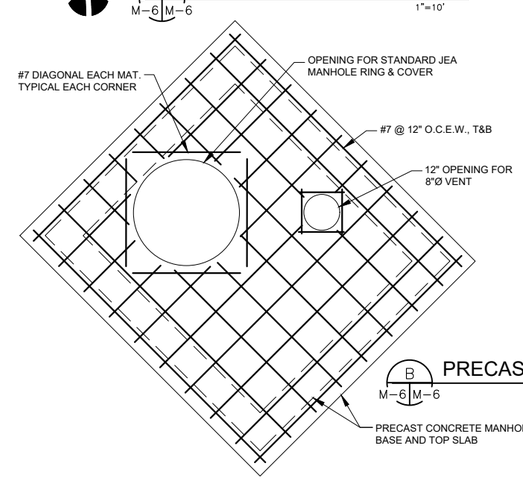

B M-6 M-6 PRECAST TOP SLAB REINFORCING PLAN 1/2"=1'-0"

MITTAUER & ASSOCIATES, INC. CONSULTING ENGINEERS
580-1 WELLS ROAD, ORANGE PARK, FLORIDA 32073
TEL: 904-276-0850 FAX: 904-276-0840 FLORIDA LICENSE C-4589

NO.	BY	DATE	REVISIONS
6	X	X	X
5	X	X	X
4	X	X	X
3	X	X	X
2	X	X	X
1	X	X	X

M&A 080140-2

DESIGN ENGINEER
JASON R. SHEPLER, P.E.
FLORIDA REGISTRATION NO. 56760

DESIGNER: JRS
DRAWN BY: WJGA
DATE: JUNE 2020
CHECKED BY: MPT
DATE: JUNE 2020

JEA Building Community

HOLIDAY ROAD MASTER PUMP STATION
SPLITTER BOX REPLACEMENT
MANHOLE NO. 3 - PLANS, SECTION & DETAIL

PROJ. NO. 8006211
DATE: JUNE 2020
SCALE: AS SHOWN

NO. SHEETS IN SET 14
SHEET NO. 13
DRAWING NO. M-6

M:\cad files\JEA\0801402 holiday rd master ps splitter box replacement\Design\M6.dwg Current Layout Tab = M-6 Mon Jun 29, 2020 - 15:36

Xrefs Attached= C1-C2-M1 [.\C1-C2-M1.dwg]

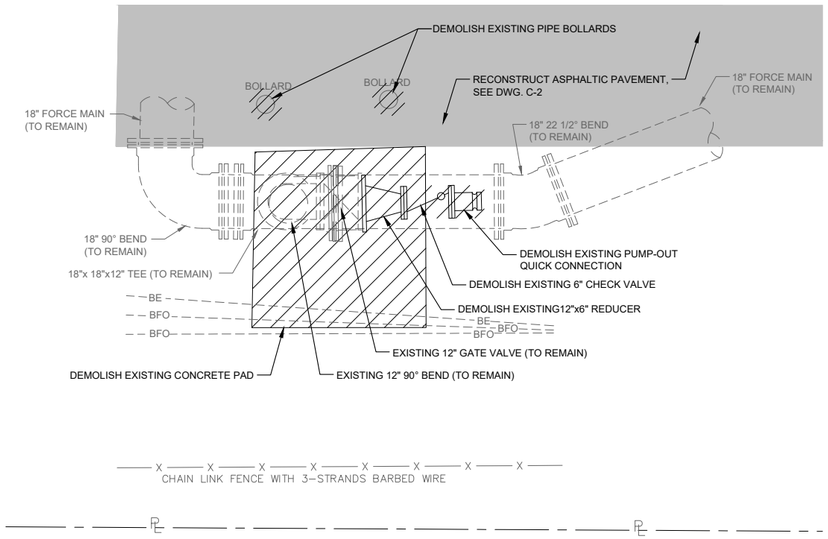

A M-1 M-7 PUMP-OUT CONNECTION DEMOLITION - DETAIL

SCALE: 1/2" = 1'-0"

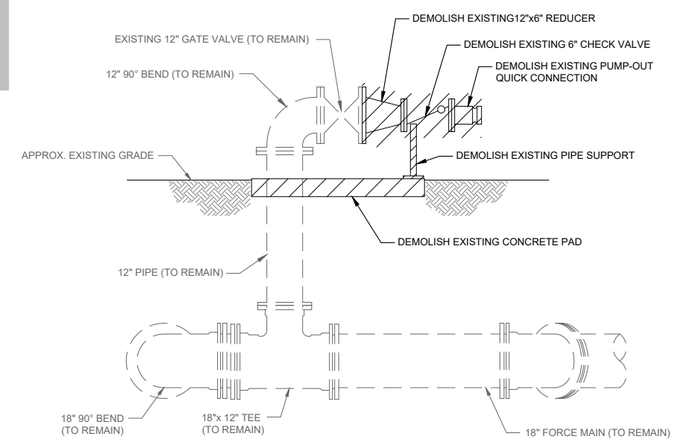

B M-7 M-7 PUMP-OUT CONNECTION DEMOLITION - DETAIL

SCALE: 1/2" = 1'-0"

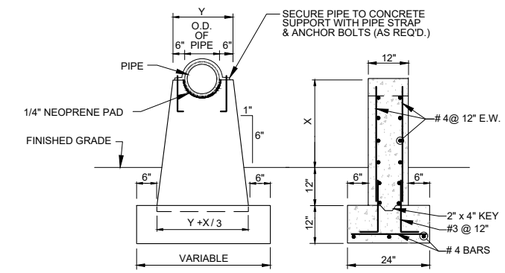

D M-7 M-7 TYPE 'E' PIPE SUPPORT

N.T.S.

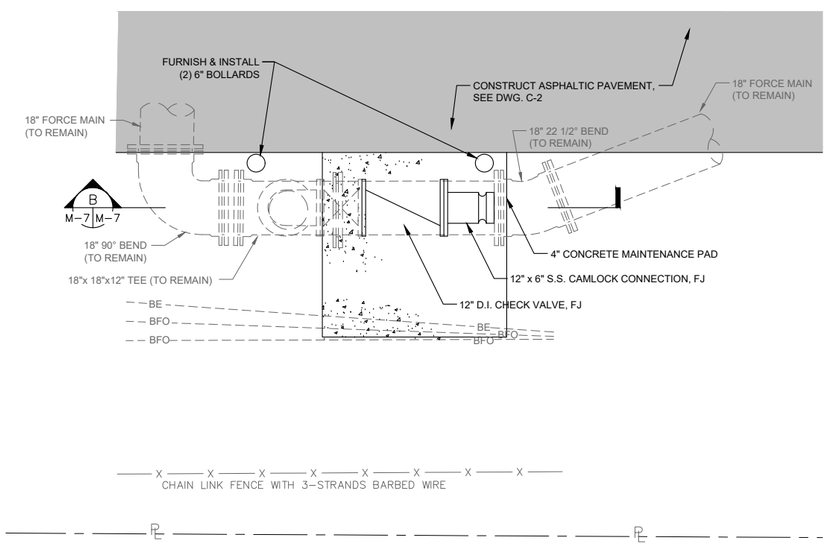

C M-1 M-7 PUMP-OUT CONNECTION MODIFICATIONS - DETAIL

SCALE: 1/2" = 1'-0"

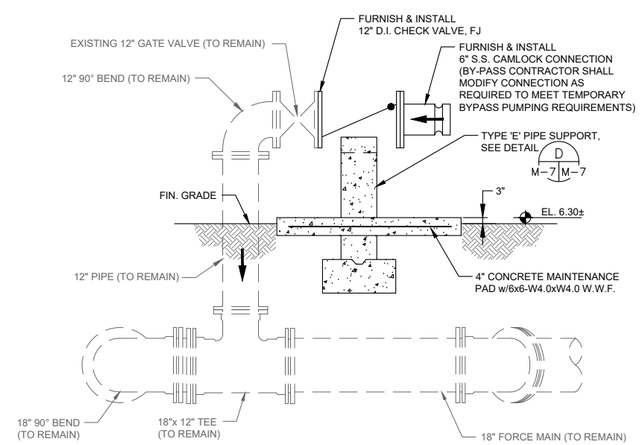

D M-1 M-7 PUMP-OUT CONNECTION MODIFICATIONS - DETAIL

SCALE: 1/2" = 1'-0"

SPALL REPAIR:

1. REMOVE ANY DEBRIS OR LOOSE MATERIAL.
2. ESTABLISH THE BOUNDARIES OF THE REPAIR. IN THE EVENT THE SPALL IS ASSOCIATED WITH RUSTING STEEL SUCH AS A PIPE SLEEVE, THE REPAIR AREA SHALL INCLUDE THE CORRODING MATERIAL.
3. REMOVE CONCRETE TO THE BOUNDARY LIMITS AND TO A MINIMUM DEPTH OF 2". USE A CONCRETE SAW AND LIGHT JACKHAMMER (30 LB OR LESS) WITH ATTACH CHIP HAMMER AS THE SITUATION ALLOWS.
4. AVOID DAMAGING EXISTING REBAR. IF EXPOSED CHIP AROUND THE BAR TO PROVIDE AT LEAST 1/2" ON ALL SIDES. IF CUT, IT MUST BE REPLACED WITH A BAR THE SAME DIAMETER AND EPOXIED INTO SOUND MATERIAL.
5. PREPARED REPAIR SURFACE MUST BE CLEAN AND SOUND. APPLY BONDING AGENT TO THE REPAIR SURFACE IN ACCORDANCE WITH MANUFACTURERS REQUIREMENTS.
6. APPLY REPAIR MORTAL TO AFFECTED AREA AND CURE IN ACCORDANCE WITH MANUFACTURERS REQUIREMENTS.

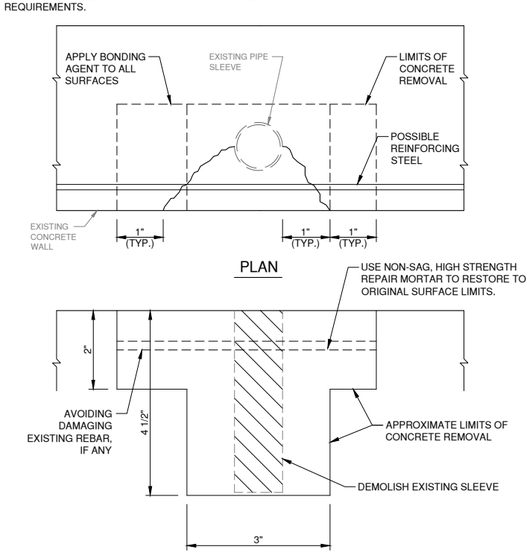

NOTE:

PIPE SLEEVES THAT HAVE NOT SPALLED THE ADJACENT CONCRETE SHALL BE CLEANED OF DEBRIS AND GROUTED SOLID FLUSH WITH SURROUNDING SURFACE.

E M-2 M-7 TYPICAL SPALLED CONCRETE REPAIR

N.T.S.

MITTAUER & ASSOCIATES, INC. CONSULTING ENGINEERS
580-1 WELLS ROAD, ORANGE PARK, FLORIDA 32073
TEL: (904) 276-0850 FAX: (904) 276-0860 FLORIDA LICENSE C-4635

NO.	BY	DATE	REVISIONS
6.	X	X	X
5.	X	X	X
4.	X	X	X
3.	X	X	X
2.	X	X	X
1.	X	X	X

M&A 0801-40-2

DESIGN ENGINEER
JASON R. SHEPLER, P.E.
FLORIDA REGISTRATION NO. 56760

DESIGNER: JRS
DRAWN BY: WJ-SA
DATE: JUNE 2020
CHECKED BY: MPT
DATE: JUNE 2020

JEA Building Community

HOLIDAY ROAD MASTER PUMP STATION
SPLITTER BOX REPLACEMENT
DETAILS & SECTIONS

PROJ. NO. 8006211
DATE: JUNE 2020
SCALE: AS SHOWN

NO. SHEETS 34
SHEET NO. 14
DRAWING NO. M-7

M:\cad files\JEA\0801402 holiday rd master ps splitter box replacement\Design\M7-M8.dwg Current Layout Tab = M-7 - DETAILS & SECTIONS Mon Jun 29, 2020 - 15:36

Xrefs Attached= C1-C2-M1 [J:\C1-C2-M1.dwg]

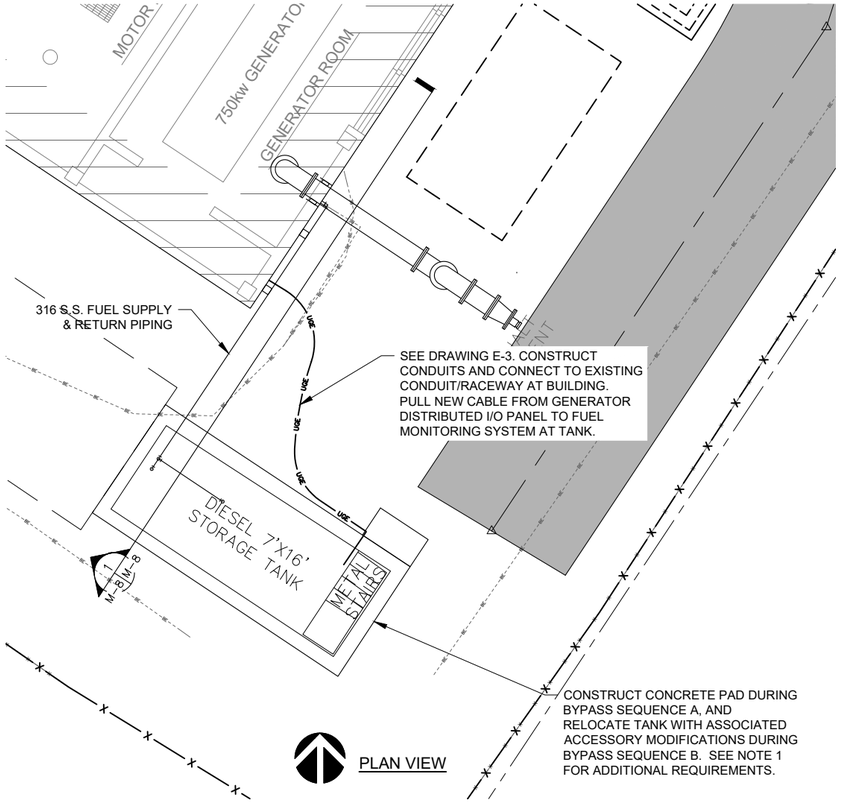

RELOCATED DIESEL FUEL TANK DETAIL

1" = 5'

NOTES:

1. JEA ENVIRONMENTAL SERVICES SHALL BE NOTIFIED 30 DAYS AND 48 HOURS PRIOR TO THE RELOCATION ACTIVITIES. THE CONTRACTOR SHALL NOTIFY DAVID NORSE IN WRITING VIA E-MAIL AT NorsDM@jea.com AND CELL PHONE (904.318.7961). THE CONTRACTOR SHALL REVIEW THE LOGISTICAL RELOCATION PLANS WITH JEA ENVIRONMENTAL SERVICES AND JEA OPERATIONS AT EACH NOTIFICATION STEP TO ENSURE ALL PARTIES ARE AWARE OF THE ACTIVITIES AND GENERATOR DOWNTIME.

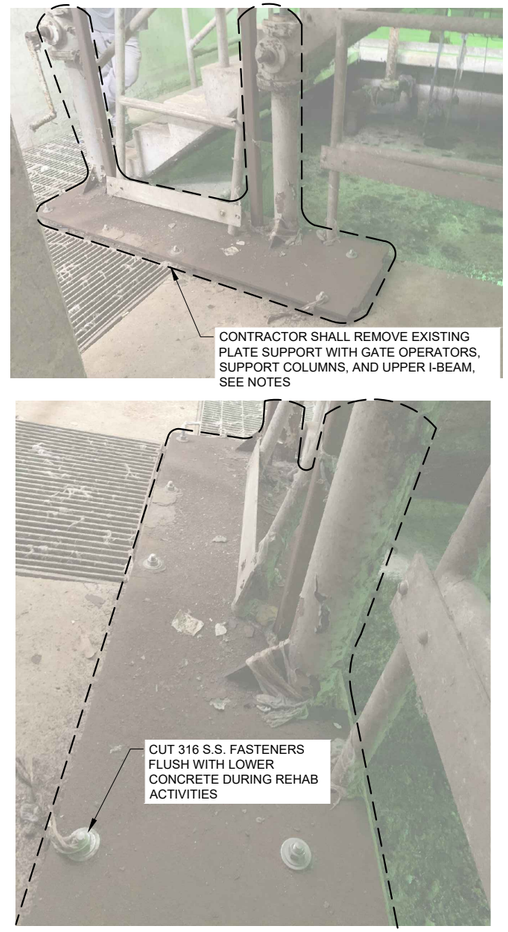

EXISTING SG-1 & SG-2 GATE OPERATOR CONDITIONS

N.T.S.

NOTES:
PROVIDE SHOP DRAWING CONFIRMATION OF APPROACH TO REMOVE AND REPLACE EXISTING SLIDE GATE ASSEMBLIES. EXISTING SUPPORT PLATE, SUPPORT COLUMNS, GATE OPERATORS, AND SLIDE GATE ATTACHMENTS SHALL BE REMOVED. REPLACEMENT GATES SHALL FASTEN AND BE SUPPORTED BY EXISTING WALL.

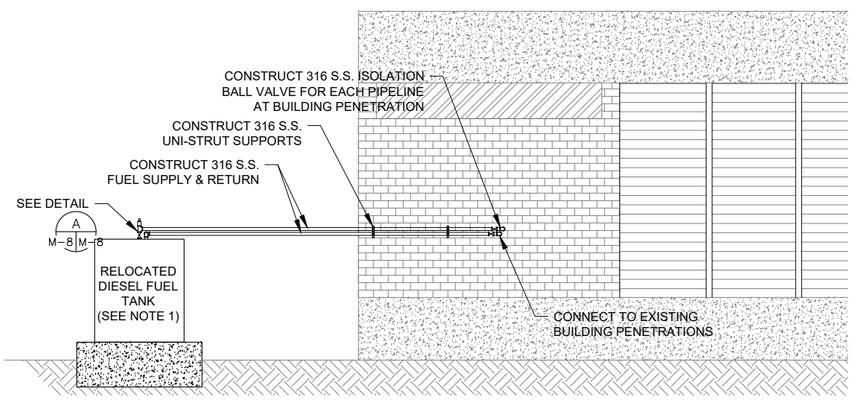

SECTION VIEW

1 M-8 M-8

1/4" = 1'-0"

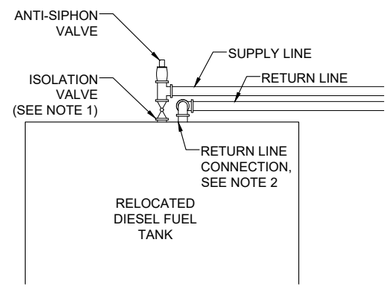

DIESEL SUPPLY & RETURN PIPING

A M-8 M-8

N.T.S.

NOTES:

1. COORDINATE WITH CATERPILLAR REPRESENTATIVE ON REPLUMBING OF SUPPLY AND RETURN LINES. CONFIRM ISOLATION VALVE CAN BE RELOCATED BELOW ANTI-SIPHON VALVE PER FDEP REQUIREMENTS.
2. EXTEND RETURN LINE TO SEPARATE SPARE PORT ON FUEL TANK. CURRENT CONFIGURATION BRINGS RETURN TO SUPPLY CONNECTION.

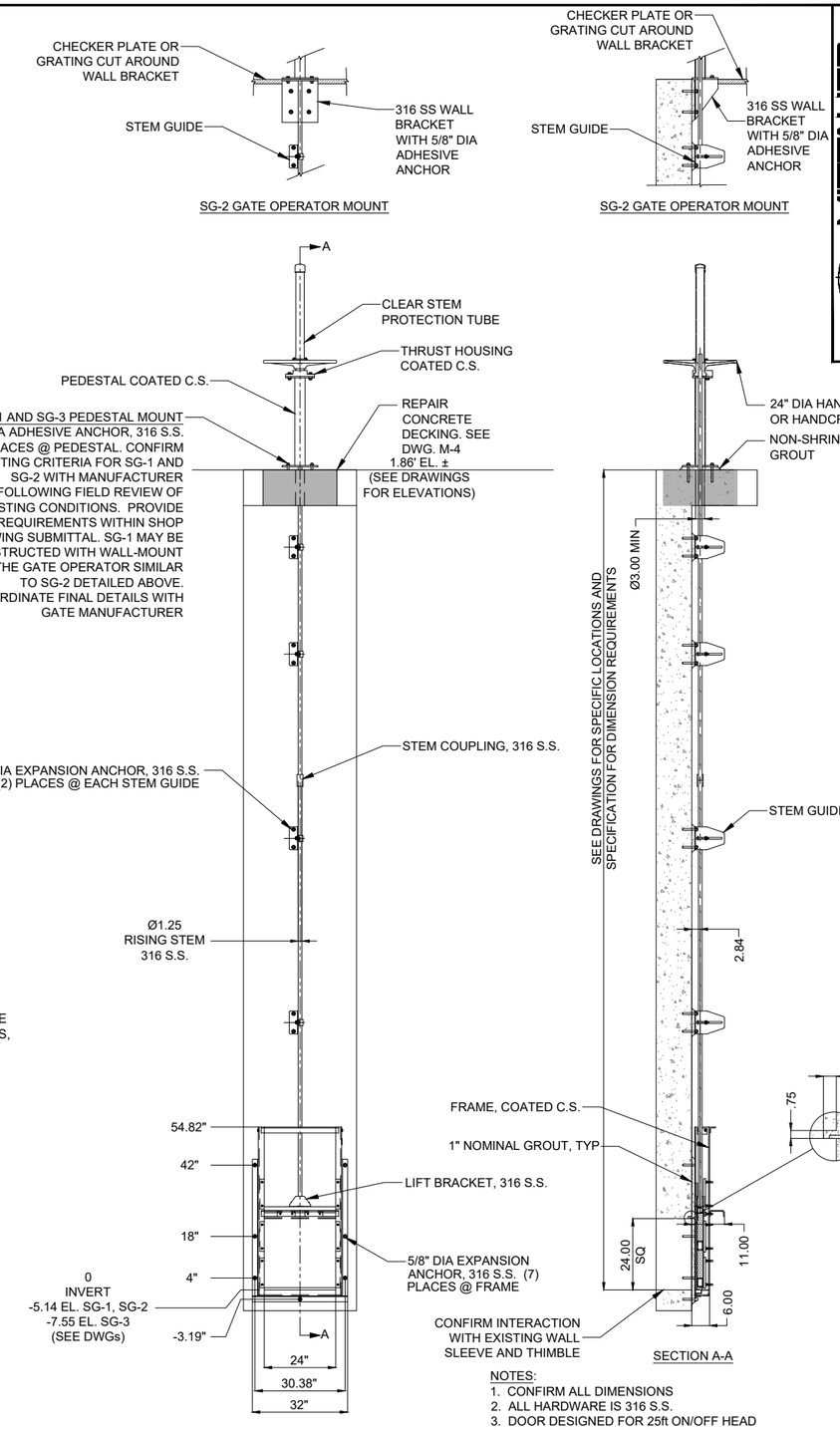

NOTES:

1. CONFIRM ALL DIMENSIONS
2. ALL HARDWARE IS 316 S.S.
3. DOOR DESIGNED FOR 25ft ON/OFF HEAD
4. SG-1, SG-2 AND SG-3

SLIDE GATE DETAIL

1/2" = 1'

MITTAUER & ASSOCIATES, INC. CONSULTING ENGINEERS
580-1 WELLS ROAD, ORANGE PARK, FLORIDA 32073
TEL: (904) 276-0850 FAX: (904) 276-0851 FLORIDA LICENSE C-4635

NO.	BY	DATE	REVISIONS
6.	X	X	X
5.	X	X	X
4.	X	X	X
3.	X	X	X
2.	X	X	X
1.	X	X	X

M&A 0801-4D-2

DESIGN ENGINEER
JASON R. SHEPLER, P.E.
FLORIDA REGISTRATION NO. 56760

DESIGNER: JRS
DRAWN BY: WJ-SA
DATE: JUNE 2020
CHECKED BY: MPT
DATE: JUNE 2020

JEA Building Community

HOLIDAY ROAD MASTER PUMP STATION
SPLITTER BOX REPLACEMENT
DETAILS & SECTIONS

PROJ. NO. 806211
DATE: JUNE 2020
SCALE: AS SHOWN

NO. SHEET'S 34
SHEET NO. 15
DRAWING NO. M-8

M:\cad files\JEA\0801402 holiday rd master ps splitter box replacement\Design\M7-M8.dwg Current Layout Tab = M-8 - DETAILS & SECTIONS Mon Jun 29, 2020 - 15:36
Xrefs Attached= C1-C2-M1 [.\C1-C2-M1.dwg]

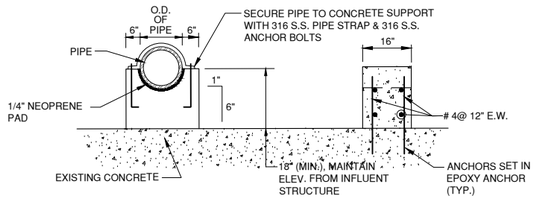

TYPE C PIPE SUPPORT

NTS

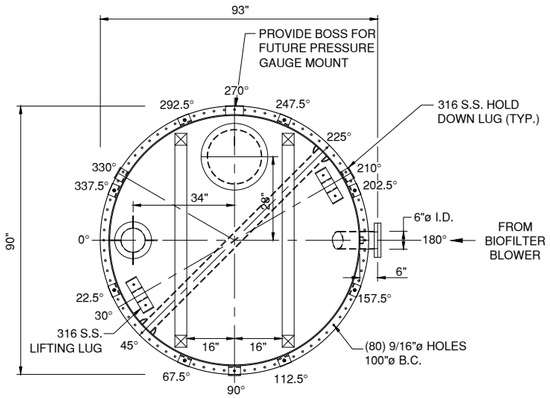

PLAN VIEW

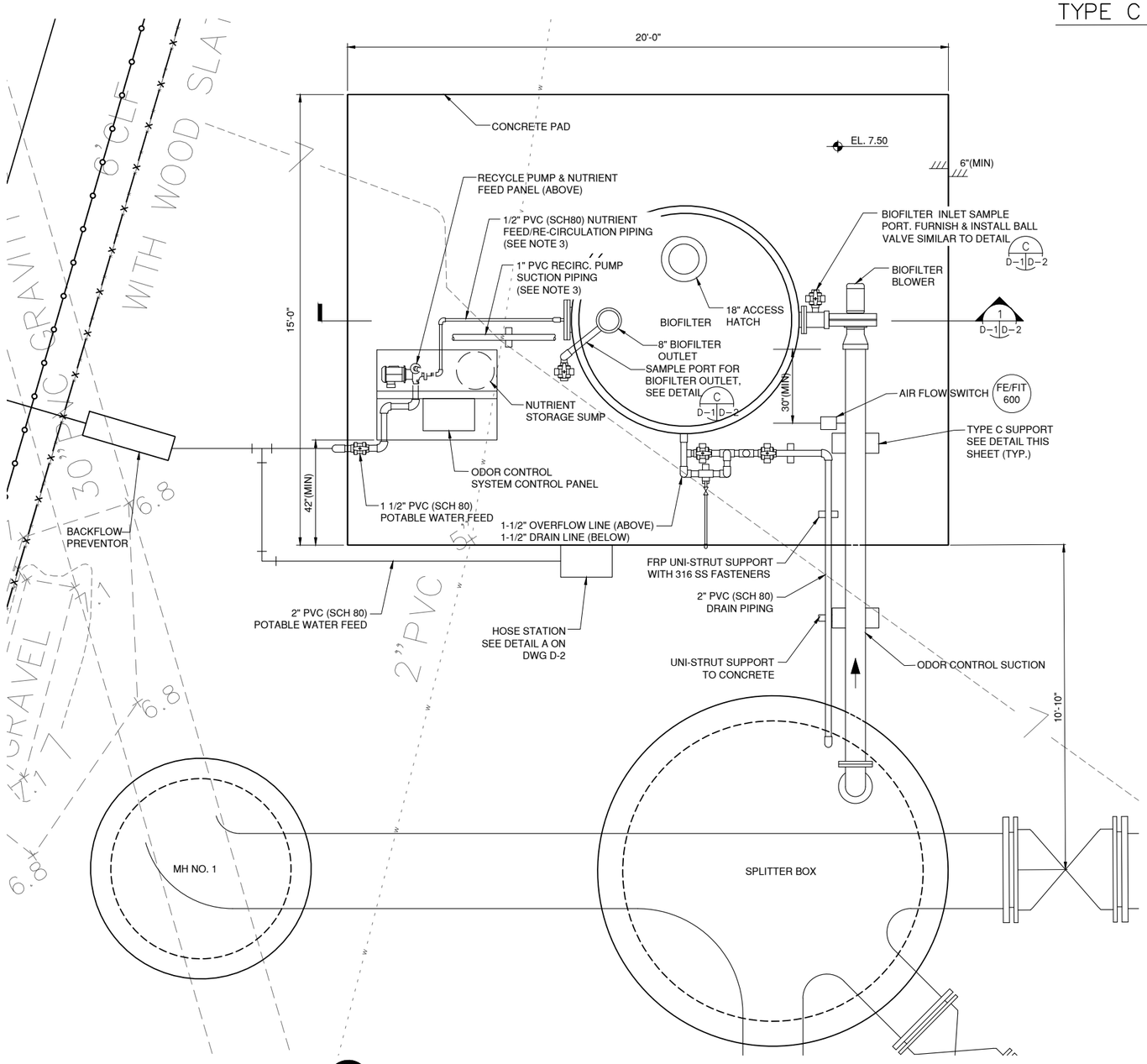

ODOR CONTROL SYSTEM PLAN

SCALE: 1" = 2'

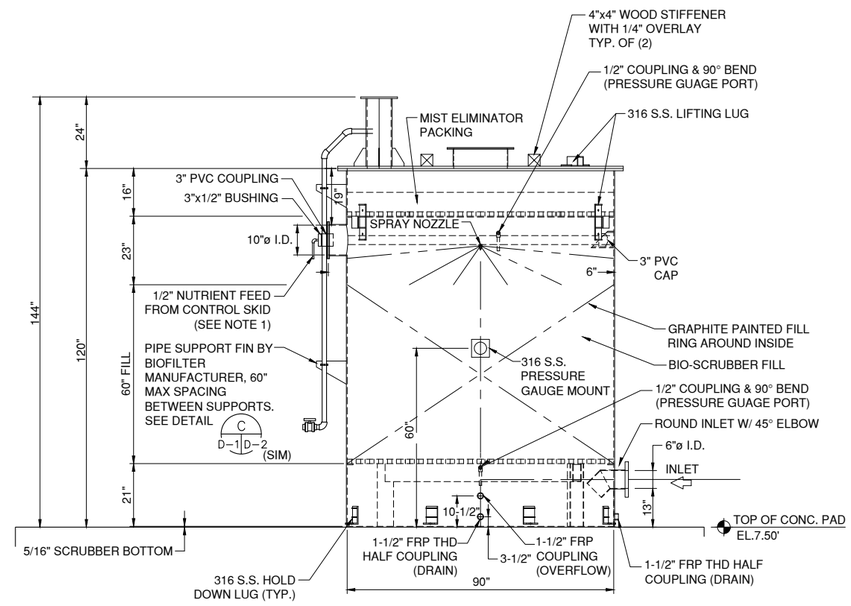

SECTION VIEW

ODOR CONTROL SYSTEM SECTION

SCALE: 1/2" = 1'-0"

NOTES:

1. CONFIRM NUTRIENT FEED PIPING SIZE WITH APPROVED SHOP DRAWING SUBMITTAL. MODIFY FITTINGS AND PIPING REQUIREMENTS PER MANUFACTURER REQUIREMENTS.

2. MINIMUM SYSTEM PERFORMANCE REQUIREMENTS:
   - 2.a. BLOWER CAPACITY = 600 CFM @ 6" W.C.
   - 2.b. EBRT = 20 SEC
   - 2.c. TREATMENT VOLUME = 200 FT3 (MIN)
   - 2.d. HYDROGEN SULFIDE FEED LEVELS = 500 PPM (MAX) | 250 PPM (AVG)
   - 2.e. HYDROGEN SULFIDE REMOVAL = 99%
   - 2.f. WATER USE = 1,200 GPD (MAX)

3. FINAL RECIRCULATION PUMP SYSTEM PIPE SIZING BY THE MANUFACTURER.

MITTAUER & ASSOCIATES, INC.
CONSULTING ENGINEERS
580-1 WELLS ROAD, ORANGE PARK, FLORIDA 32073
TEL: (904) 278-0030 FAX: (904) 278-0240 FLORIDA LICENSE: C-4676

M&A 0801-40-2

NO.	BY	DATE	REVISIONS
6	X	X	X
5	X	X	X
4	X	X	X
3	X	X	X
2	X	X	X
1	X	X	X

DESIGN ENGINEER
JASON R. SHEPLER, P.E.
FLORIDA REGISTERATION NO. 58760

DESIGNER: JRS
DRAWN BY: KDN-JBA
DATE: JUNE 2020
CHECKED BY: MPT
DATE: JUNE 2020

JEA Building Community

HOLIDAY ROAD MASTER PUMP STATION
SPLITTER BOX REPLACEMENT
ODOR CONTROL SYSTEM - PLAN & SECTIONS

PROJ. NO. 806211
DATE: JUNE 2020
SCALE: AS SHOWN

NO. SHEETS IN SET: 16
SHEET NO. 16
DRAWING NO. D-1

M:\cad files\JEA\0801402 holiday rd master ps splitter box replacement\Design\D1.dwg Current Layout Tab = D-1 Mon Jun 29, 2020 - 15:36
Xrefs Attached= C1-C2-M1 [.\C1-C2-M1.dwg]

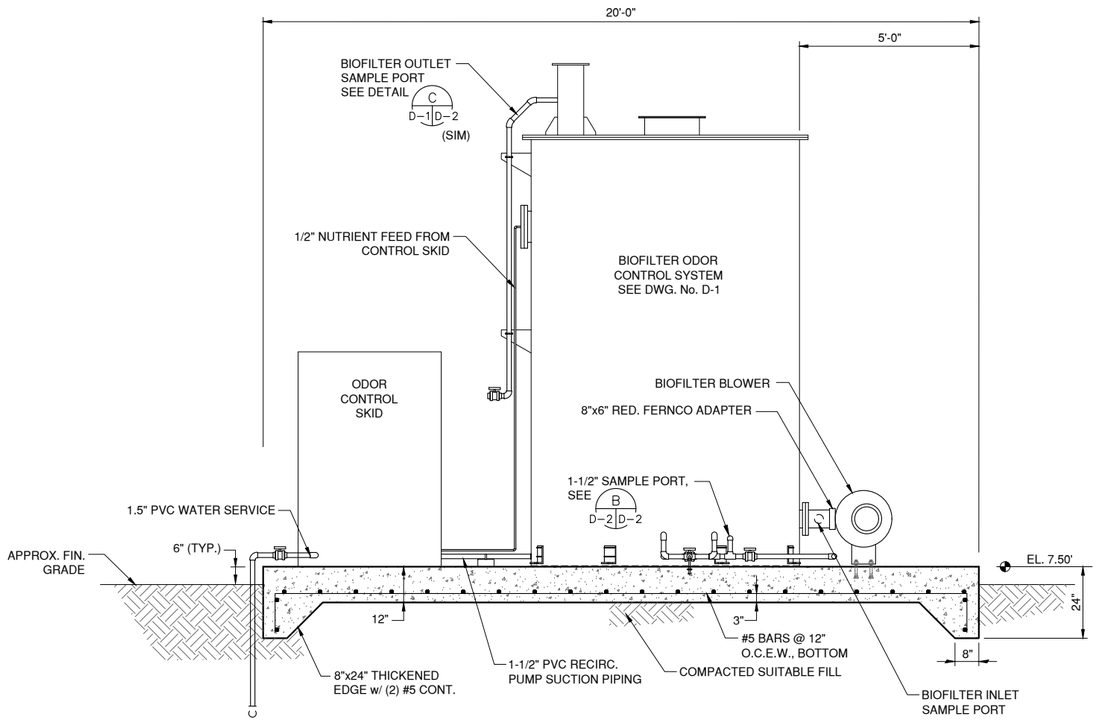

1 D-1 D-2 ODOR CONTROL SYSTEM – SECTION
1/2" = 1'-0"

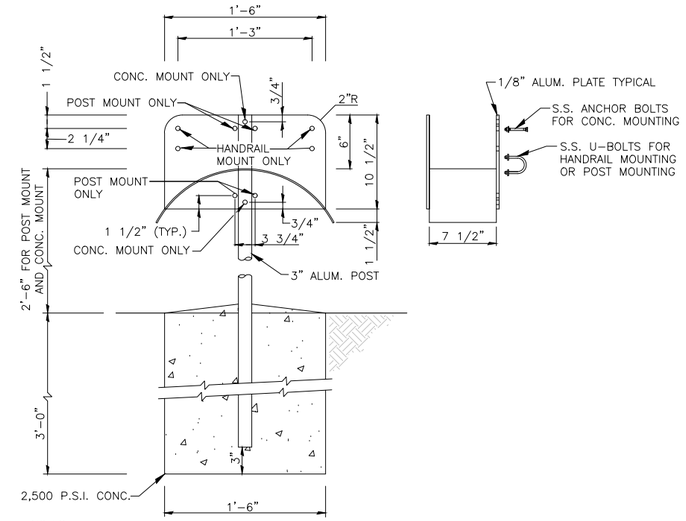

NOTES:

1. ALL FASTENERS TO BE 316 S.S.
2. 3/4" HOSE TO BE PROVIDED AT ALL HOSE RACK ASSEMBLIES WITH 316 S.S. SPRAY NOZZLE.
3. UNLESS NOTED OTHERWISE ON THE DRAWING, 50 LF OF HOSE SHALL BE PROVIDED FOR EACH ASSEMBLY.

A D-1 D-2 HOSE RACK ASSEMBLY DETAIL
N.T.S.

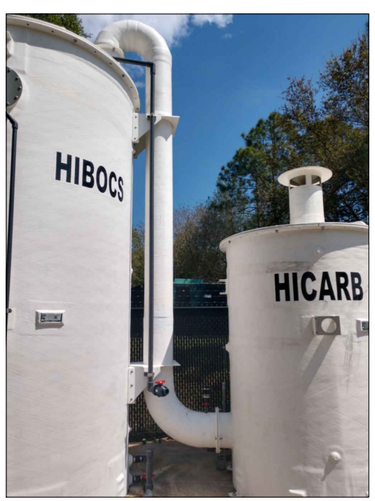

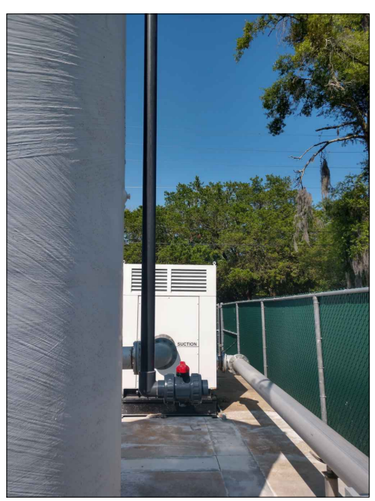

C D-1 D-2 BIOFILTER OUTLET SAMPLE PORT – TYPICAL INSTALLATION DETAIL
NOTE: CONSTRUCT SAMPLE PORT SIMILAR TO OTHER JEA FACILITIES DEPICTED IN THE PHOTOGRAPHS
N.T.S.

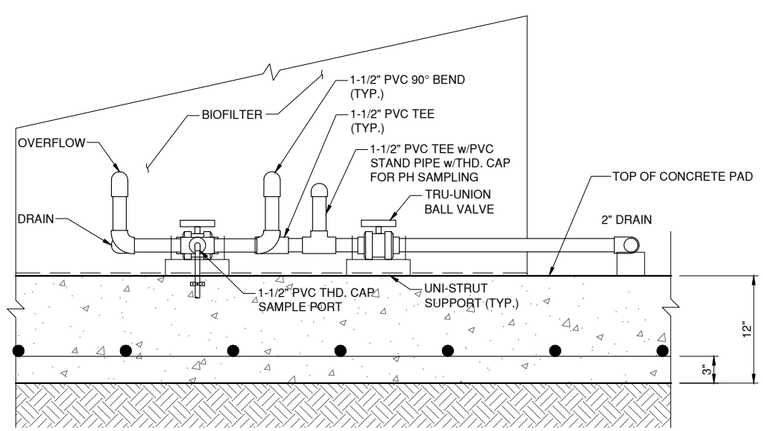

NOTE:
PROVIDE UNIONS AT KEY FITTINGS TO ALLOW FUTURE MAINTENANCE OF THE SYSTEM

B D-2 D-2 SAMPLE PORT DETAIL
1 1/2" = 1'-0"

MITTAUER & ASSOCIATES, INC.
CONSULTING ENGINEERS
580-1 WELLS ROAD, ORANGE PARK, FLORIDA 32073
TEL. (904) 278-0030 FAX. (904) 278-0840 FLORIDA LICENSE CA-6569
M&A 0801-40-2

NO.	BY	DATE	REVISIONS
6.	X	X	X
5.	X	X	X
4.	X	X	X
3.	X	X	X
2.	X	X	X
1.	X	X	X

DESIGN ENGINEER
JASON R. SHEPLER, P.E.
FLORIDA REGISTRATION NO. 58760

DESIGNER: JRS
DRAWN BY: KDH/JSA
DATE: JUNE 2020
CHECKED BY: MPT
DATE: JUNE 2020

JEA Building Community

HOLIDAY ROAD MASTER PUMP STATION
SPLITTER BOX REPLACEMENT
ODOR CONTROL SYSTEM - DETAILS

PROJ. NO. 8006211
DATE: JUNE 2020
SCALE: AS SHOWN

NO. SHEETS 34
SHEET NO. 17
DRAWING NO. D-2

M:\cad files\JEA\0801402 holiday rd master ps splitter box replacement\Design\D2.dwg Current Layout Tab = D-2 Mon Jun 29, 2020 - 15:36
Xrefs Attached=

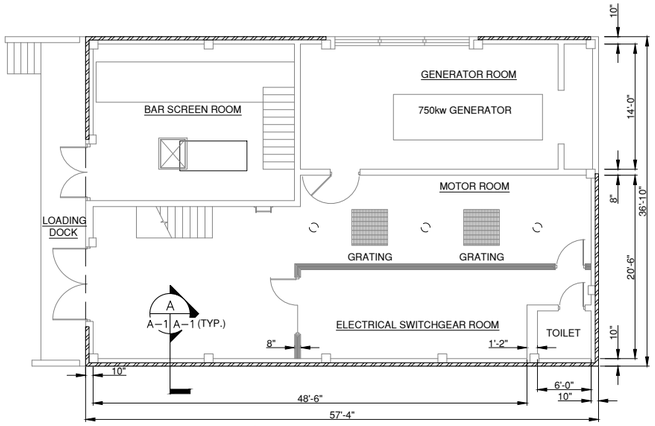

FLOOR PLAN
1/8" = 1'-0"

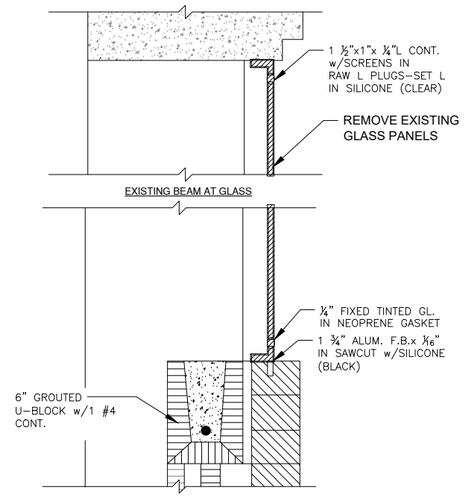

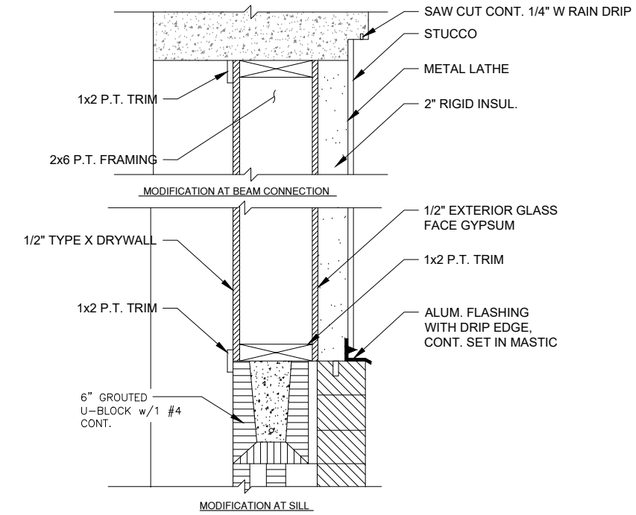

GLASS REPLACEMENT SECTIONS
A / A-1 A-1
3/16" = 1"

MATERIAL INDICATION LEGEND	
	CONCRETE
	TINTED GLASS
	BRICK & CMU
	C.M.U

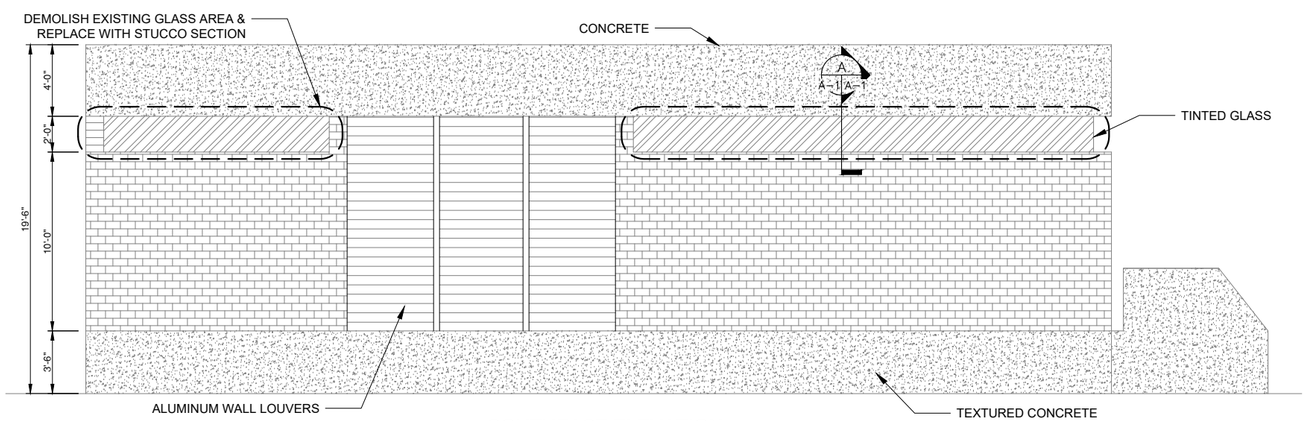

SOUTHEAST ELEVATION
1/4" = 1'-0"

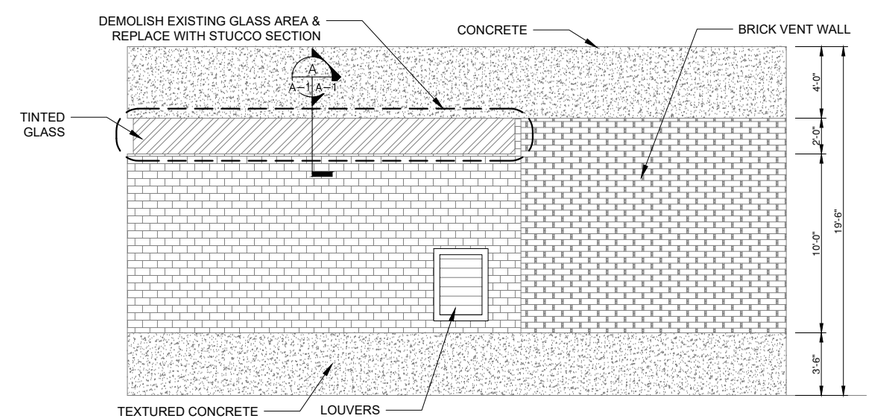

SOUTHWEST ELEVATION
1/4" = 1'-0"

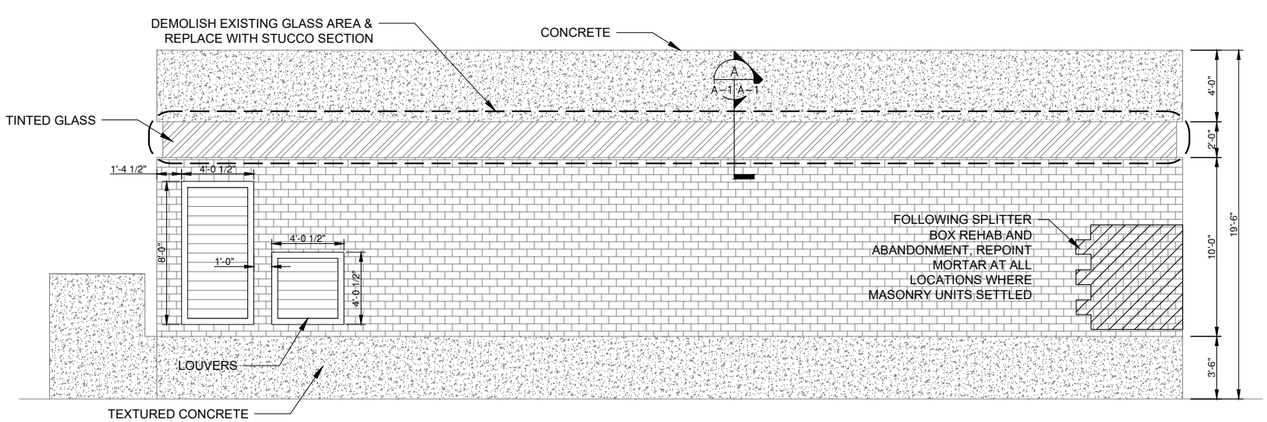

NORTHWEST ELEVATION
1/4" = 1'-0"

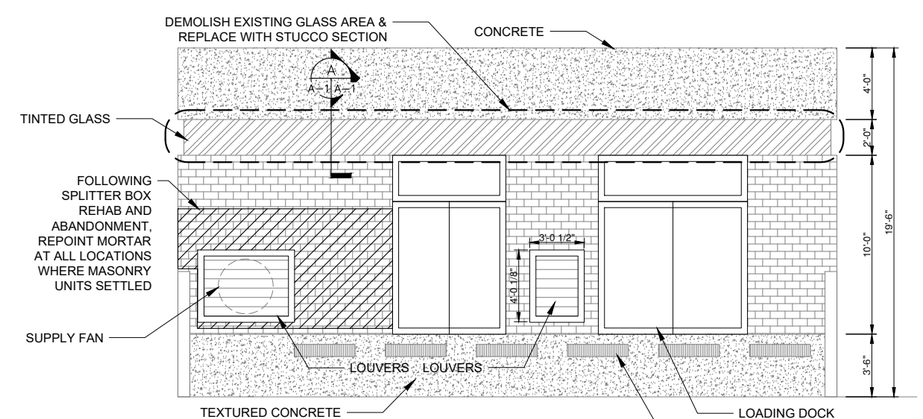

NORTHEAST ELEVATION
1/4" = 1'-0"

MITTAUER & ASSOCIATES, INC.
CONSULTING ENGINEERS
580-1 WELLS ROAD, ORANGE PARK, FLORIDA 32073
TEL: (904) 278-0030 FAX: (904) 278-0040 FLORIDA LICENSE: EC-6569

NO.	BY	DATE	REVISIONS
6	X	X	X
5	X	X	X
4	X	X	X
3	X	X	X
2	X	X	X
1	X	X	X

M&A 0801-40-2

DESIGN ENGINEER
JASON R. SHEPLER, P.E.
FLORIDA REGISTRATION NO. 58760

DESIGNER: JRS
DRAWN BY: VG/JSA
DATE: JUNE 2020
CHECKED BY: MPT
DATE: JUNE 2020

JEA Building Community

HOLIDAY ROAD MASTER PUMP STATION
SPLITTER BOX REPLACEMENT
DEMOLITION-MODIFICATION PLAN, SECTION & ELEVATIONS

PROJ. NO. 8006211
DATE: JUNE 2020
SCALE: AS SHOWN

NO. SHEETS IN SET 18
SHEET NO. 18
DRAWING NO. A-1

M:\cad files\JEA\0801402 holiday rd master ps splitter box replacement\Design\A1.dwg Current Layout Tab = A-1 Mon Jun 29, 2020 - 15:37

Xrefs Attached=

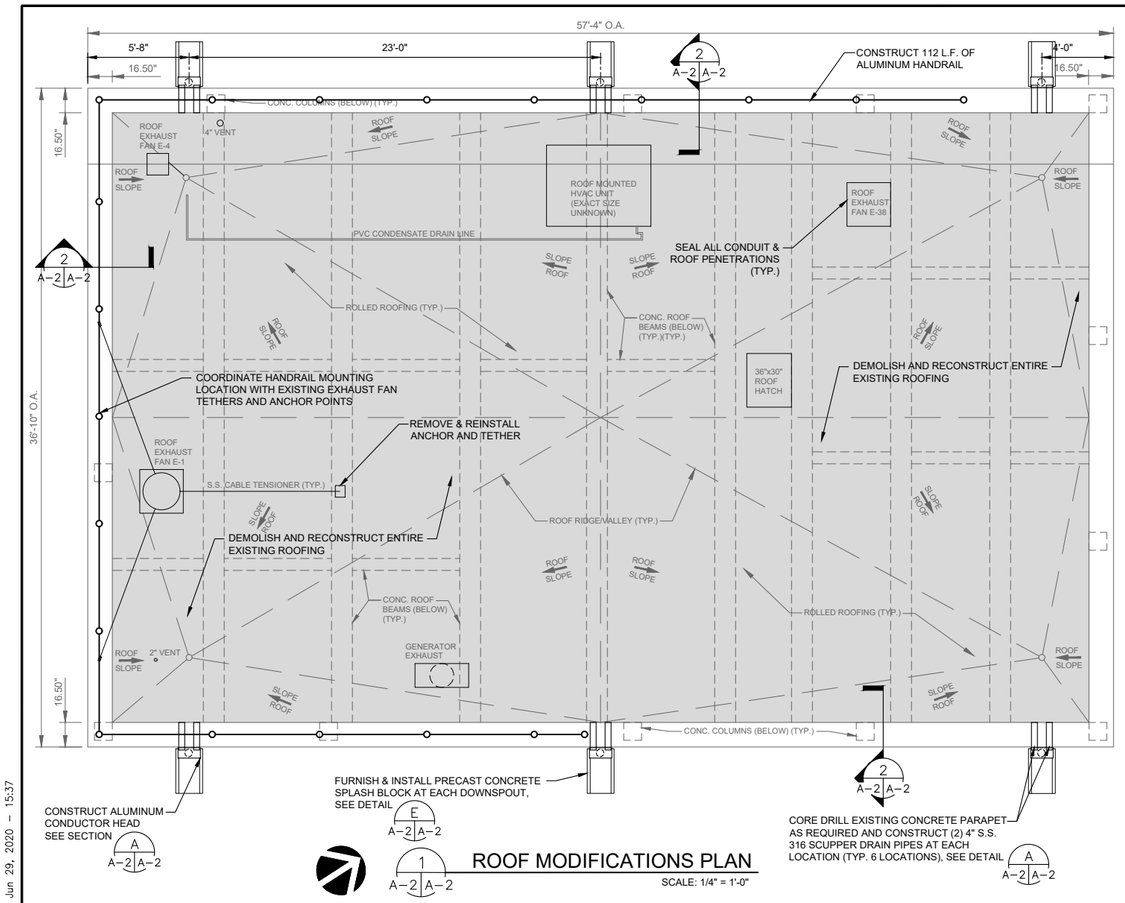

1 A-2 A-2 ROOF MODIFICATIONS PLAN
SCALE: 1/4" = 1'-0"

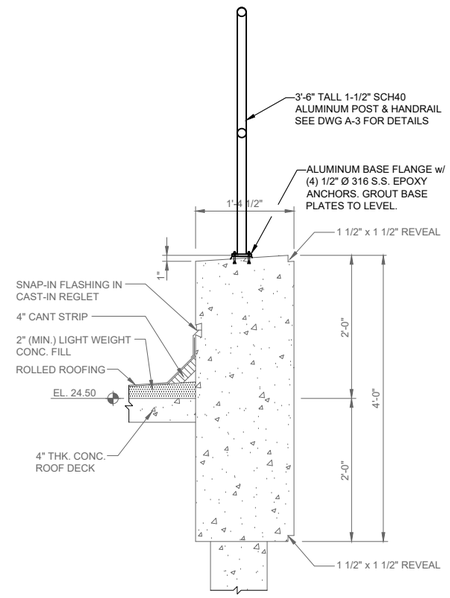

2 A-2 A-2 SECTION
SCALE: 1" = 1'-0"

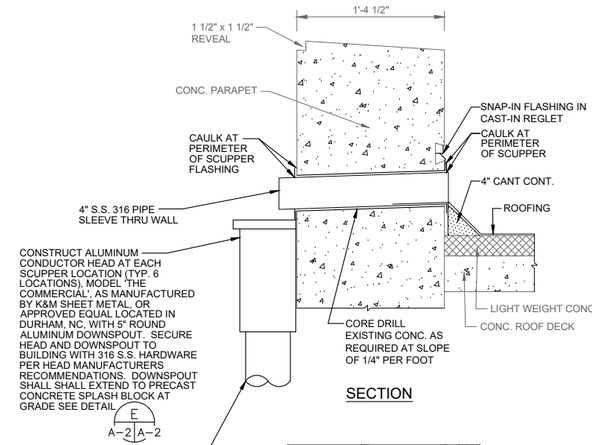

SECTION

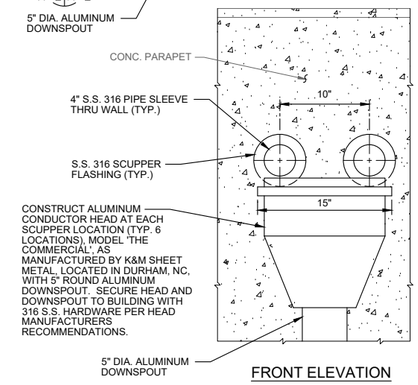

FRONT ELEVATION

A A-2 A-2 ROOF SCUPPER - DETAIL
SCALE: 1 1/2" = 1'-0"

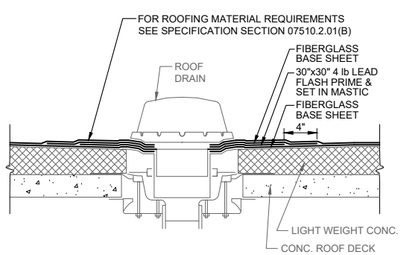

B A-2 A-2 ROOF DRAIN - DETAIL
SCALE: 1 1/2" = 1'-0"

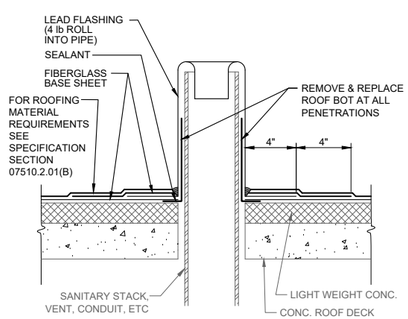

C A-2 A-2 ROOF PENETRATION - DETAIL
SCALE: 1 1/2" = 1'-0"

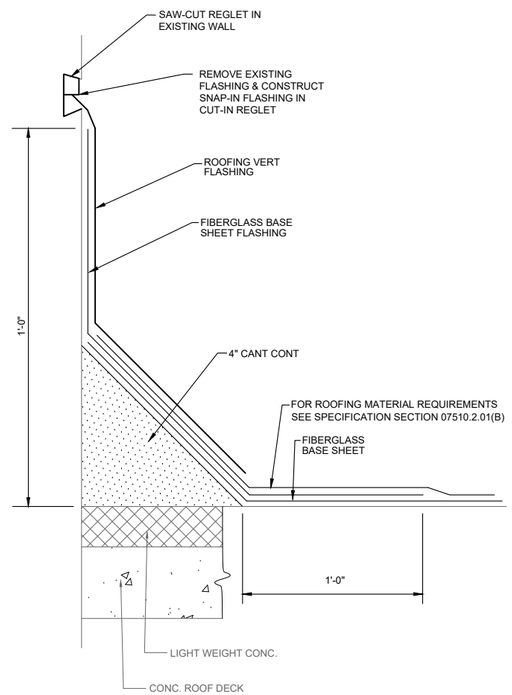

D A-2 A-2 DETAIL
NTS

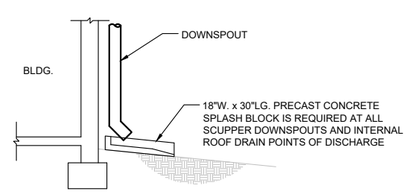

E A-2 A-2 DOWNSPOUT SPLASH BLOCK
NTS

MITTAUER & ASSOCIATES, INC.
CONSULTING ENGINEERS
580-1 WELLS ROAD, ORANGE PARK, FLORIDA 32073
TEL: (904) 278-0820 FAX: (904) 278-0840 Florida License: CA-6597

M&A 0801-40-2

NO.	BY	DATE	REVISIONS
6	X	X	X
5	X	X	X
4	X	X	X
3	X	X	X
2	X	X	X
1	X	X	X

DESIGN ENGINEER
JASON R. SHEPLER, P.E.
FLORIDA REGISTRATION NO. 58760

DESIGNER:	JRS
DRAWN BY:	JRS/SA
DATE:	JUNE 2020
CHECKED BY:	MPT
DATE:	JUNE 2020

JEA Building Community

HOLIDAY ROAD MASTER PUMP STATION SPLITTER BOX REPLACEMENT ROOF MODIFICATIONS PLAN

PROJ. NO.	806211
DATE:	JUNE 2020
SCALE:	AS SHOWN
NO. SHEETS IN SET	19
SHEET NO.	19
DRAWING NO.	A-2

M:\cad files\JEA\0801402 holiday rd master ps splitter box replacement\Design\A2.dwg Current Layout Tab = A2 Mon Jun 29, 2020 - 15:37
Xrefs Attached=

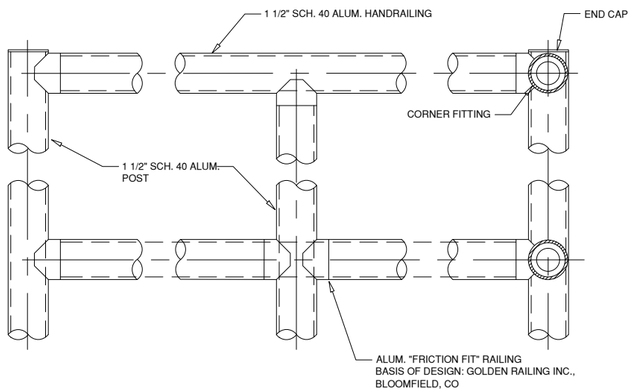

END POST | INTERMEDIATE POST | CORNER POST

HORIZONTAL HANDRAILING

NTS

HANDRAIL NOTES

1. Guardrails and Handrails shall be the product of a company normally engaged in the manufacture of pipe railing. Railing shall be shop assembled in lengths not to exceed 24 feet for field erection.
2. The handrail shall be made of pipes joined together with component fittings. Samples of all components, bases, toe plate and pipe shall be submitted for approval at the request of the engineer. Components that are pop–riveted or glued at the joints will not be acceptable. All components must be mechanically fastened with stainless steel hardware.
3. Railings shall be 1 1/2" Schedule 40 aluminum pipe alloy 6105–T5, ASTM–B–429 or ASTM–B–221. Posts shall be 1 1/2" Schedule 40 aluminum pipe of the same alloy. Post spacing shall be a maximum of 6'–0".
4. Guardrails and Handrails shall be designed to withstand a 200 lb concentrated load applied in any direction and at any point on the top rail.
5. The manufacturer shall submit calculations for approval at the request of the Engineer. Testing of base castings or base extrusions by an independent lab or manufacturer's lab (if manufacturer's lab meets the requirements of the Aluminum Association) will be an acceptable substitute for calculations. Calculations will be required for approval of all other design aspects.
6. Posts shall not interrupt the continuation of the top rail at any point along the railing, including corners and end terminations (OSHA 1910.23). The top surface of the top railing shall be smooth and shall not be interrupted by projected fittings.
7. The mid–rail at a corner return shall be able to withstand a 200 lb load without loosening. The manufacturer is to determine this dimension for their system and provide physical laboratory tests to confirm compliance.
8. Concrete anchors shall be stainless steel type 316 and shall be furnished by the handrail manufacturer. The anchor design shall include the appropriate reduction factors for spacing and edge distances in accordance with the manufacturer's published data.
9. Toe plate shall conform to OSHA standards. Toe plate shall be a minimum of 4" high and shall be be an extrusion that attaches to the posts with clamps that will allow for expansion and contraction between posts. Toe plates shall be set 1/4" above the walking surface. Toe plates shall be provided on handrails as required by OSHA and/or as shown on drawings. Toe plates shall be shipped loose in stock lengths for field installation.
10. Openings in the railing shall be guarded by a self–closing gate (OSHA 1910.23). Safety chains shall not be used unless specifically shown on the drawings.
11. The pipe shall be plastic–wrapped. The plastic wrap is to be removed after erection.
12. Aluminum surfaces in contact with concrete, grout or dissimilar metals will be protected with a coat of bituminous paint, 1/8" neoprene isolators or other approved material.

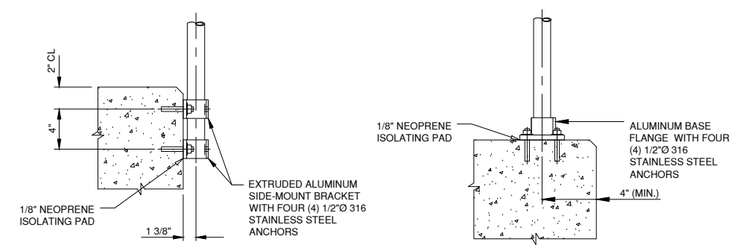

SIDE MOUNT | TOP MOUNT

TYPICAL BASE PLATE CONNECTIONS

NTS

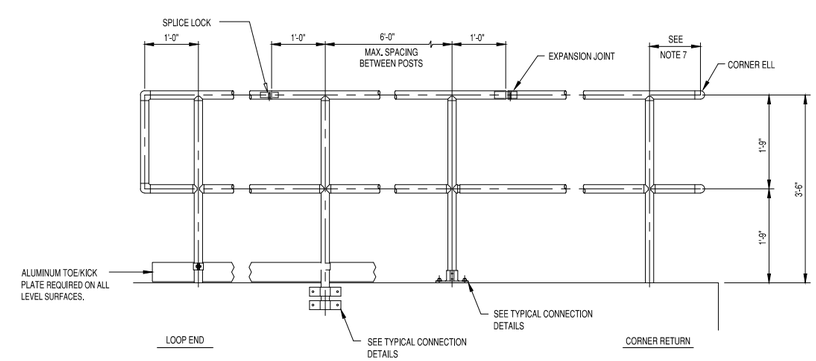

TYPICAL HANDRAIL PROFILE

NTS

GUARDRAILS SHALL BE TOP-MOUNTED OR SIDE-MOUNTED, AS SHOWN ON PLANS

HANDRAILING NOTES:

1. FITTINGS ATTACHED TO INTERMEDIATE POSTS WITH (1) 1/4"ø x 2 3/4" LG. 316 S.S.M.B.
2. FITTING ATTACHED TO END POST, CORNER POSTS & TOP RAILS WITH (1) #17 x 1" LG. 316 S.S. TEK–SCREW
3. RAILING ATTACHED TO FITTING WITH (1) 3/8"ø x 1 1/2" LG. 316 S.S. SET KNURLED CUP SET SCREWS.

MITTAUER & ASSOCIATES, INC.
CONSULTING ENGINEERS
580-1 WELLS ROAD, ORANGE PARK, FLORIDA 32073
TEL: (904) 278-0050 FAX: (904) 278-0948 FLORIDA LICENSE C-4593

M&A 0801-40-2

NO.	BY	DATE	REVISIONS
6	X	X	X
5	X	X	X
4	X	X	X
3	X	X	X
2	X	X	X
1	X	X	X

DESIGN ENGINEER
JASON R. SHEPLER, P.E.
FLORIDA REGISTRATION NO.
58760

DESIGNER: JRS
DRAWN BY: WOJSA
DATE: JUNE 2020
CHECKED BY: MPT
DATE: JUNE 2020

JEA Building Community

HOLIDAY ROAD MASTER PUMP STATION
SPLITTER BOX REPLACEMENT
ROOF MODIFICATION DETAILS

PROJ. NO. 8006211
DATE: JUNE 2020
SCALE: AS SHOWN

NO. SHEETS 24
SHEET NO. 20
DRAWING NO. A-3

M:\cad files\JEA\0801402 holiday rd master ps splitter box replacement\Design\A3.dwg Current Layout Tab = A3 Mon Jun 29, 2020 – 15:37
Xrefs Attached=

ELECTRICAL LEGEND

- P101 — FEEDER CONDUIT "P101" (SEE CONDUIT AND CABLE SCHEDULE)
- CONDUIT RUNS CONCEALED
- CONDUIT RUNS EXPOSED
- CONDUIT RUNS IN DUCT BANKS OR BELOW GRADE
- CONDUIT TURNING UP
- CONDUIT TURNING DOWN
- CHANGE IN CONDUIT ELEVATIONS USING CONDUIT OUTLET BODIES.
- CONDUIT TERMINATED WITH WATERTIGHT CABLE CONNECTOR
- BRANCH CIRCUIT HOMERUN (ARROWS DENOTE PANEL CIRCUITS, STROKES DENOTE CONDUCTORS. NO STROKES INDICATES 3/4" CONDUIT WITH TWO NO.12 CONDUCTORS & ONE NO.12 GND.)
- E P1 — MANHOLE, HANDHOLE, OR PULLBOX AS INDICATED ("P" POWER, "C" CONTROL, "T" TELEPHONE, "E" EXISTING)
- W 5 — TYPICAL WIRING DEVICE NOTATIONS ("W" WEATHERPROOF OR "X" EXPLOSION PROOF DEVICE CONNECTED TO CIRCUIT "5". ENCLOSING SQUARE DENOTES FLOORBOX)
- RECEPTACLE
- SPECIAL PURPOSE OUTLET
- J — JUNCTION BOX
- b 3 — SINGLE POLE SWITCH CONTROLS FIXTURES MARKED "b" ("2" 2 POLE, "3" 3 WAY, "1" TIME SWITCH, "M" MANUAL MOTOR STARTER)
- T — THERMOSTAT (LINE VOLTAGE TYPE WITH ON-OFF-AUTO SWITCH UNLESS NOTED).
- 60 / 3 / NF — SAFETY DISCONNECT SWITCH (AMPERAGE RATING/POLES/FUSE RATING - "NF" NON-FUSED, "DT" DOUBLE-THROW)
- INTERCOM OUTLET
- TELEPHONE OUTLET
- TELEPHONE BACKBOARD
- LOW VOLTAGE PANELBOARD
- HIGH VOLTAGE PANELBOARD
- FS — FLOAT SWITCH
- LS — LIMIT SWITCH

- MCP / 100 — CIRCUIT BREAKER (FRAME SIZE/TRIP RATING - "MCP" MOTOR CIRCUIT PROTECTOR)
- FVNR / SIZE 3 — MAGNETIC TYPE COMBINATION MOTOR STARTER, NEMA SIZE AS INDICATED ("FV" FULL VOLTAGE, "RV" REDUCED VOLTAGE, "SS" SOLID STATE, "NR" NON-REVERSING, "R" REVERSING, "2S" TWO SPEED, "1W" ONE WINDING, "2W" TWO WINDING)
- VFD — VARIABLE FREQUENCY DRIVE
- 15 — MOTOR (NUMERAL INDICATES HORSEPOWER - "H" SPACE HEATER, "T" WINDING THERMOSTAT, "M" MOISTURE DETECTOR)
- POTENTIAL TRANSFORMER; CURRENT TRANSFORMER
- R — PILOT LIGHT ("A" AMBER, "B" BLUE, "C" CLEAR, "G" GREEN, "R" RED, "W" WHITE)
- A — ALARM SIGNAL OR ANNUNCIATOR POINT
- I — ELECTRICAL INTERLOCK
- K — KIRK KEY MECHANICAL INTERLOCK
- R — ASSOCIATED DEVICE "REMOTE" FROM MOTOR CONTROL CENTER OR CONTROL PANEL
- FOR — FORWARD/OFF/REVERSE SELECTOR SWITCH CONTROL STATION
- HLOA — HIGH/LOW/OFF/AUTO SELECTOR SWITCH CONTROL STATION
- HOA — HAND/OFF/AUTO SELECTOR SWITCH CONTROL STATION
- PB PBL — STOP/START MOMENTARY TYPE PUSHBUTTON CONTROL STATION ("L" LOCKING DEVICE)
- PBM — STOP/START MAINTAIN TYPE PUSHBUTTON CONTROL STATION
- SO — SAFE OFF MOMENTARY PUSHBUTTON CONTROL STATION WITH LOCKING DEVICE
- A AS — AMMETER AND AMMETER SWITCH
- H ETM — HOURS OF OPERATION; ELAPSED TIME METER
- PF — POWER FACTOR METER
- V VS — VOLTMETER AND VOLTMETER SWITCH
- W — WATTMETER
- AA — AUTO ALTERNATOR
- CM — CONTROL MODULE
- CR — CONTROL RELAY
- GF — GROUND FAULT PROTECTION SYSTEM
- LA — LIGHTNING ARRESTOR
- PM — POWER MONITOR
- SP — STEPPING PROGRAMMER
- TD — TIME DELAY RELAY
- LC — LEVEL CONTROLLER
- OL — OVERLOAD DEVICE
- PC — PRESSURE CONTROLLER
- SC — SPEED CONTROLLER
- TC 24H / RC / 15M — TIME CLOCK (CYCLE TIME/TYPE/MIN. SETTING - "AC" ADJUSTABLE CYCLE, "M" MOMENTARY, "P" PULSE, "RC" REPEAT CYCLE)
- PS — PRESSURE SWITCH
- SV — SOLENOID VALVE
- TS — TEMPERATURE SWITCH
- FLS — FLOW SWITCH
- TLS — TANK LEVEL SWITCH
- ALARM HORN

CONDUIT AND CABLE SCHEDULE

CONDUIT		CABLE				FROM	TO	FOR	NOTES
NO.	SIZE	COND.	AWG	TYPE	VOLT				
P100	3/4"	4	10	XHHW	600	MCC	ODOR CONTROL PANEL	POWER, GROUND	
P101	3/4"	4	12	XHHW	600	ODOR CONTROL PANEL	ODOR CONTROL BLOWER	POWER, GROUND	
P102	3/4"	4	12	XHHW	600	ODOR CONTROL PANEL	RE-CIRCULATION PUMP	POWER, GROUND	
P103	3/4"	3	12	XHHW	600	ODOR CONTROL PANEL	NUTRIENT METERING PUMP	POWER, GROUND	SEE NOTE 4
P104	3/4"	3	12	XHHW	600	ODOR CONTROL PANEL	FE/FIT 600	POWER, GROUND	
C100	3/4"	3	12	XHHW	600	FE/FIT 600	P.S. CONTROL PNL PLC	STATUS	AIR FLOW SWITCH
C101	3/4"	2	14	XHHW	600	ODOR CONTROL PANEL	P.S. CONTROL PNL PLC	HOA POSITION	MONITOR AUTO
C102	3/4"	2	14	XHHW	600	ODOR CONTROL PANEL	P.S. CONTROL PNL PLC	STATUS	AIR FLOW SWITCH
C373	3/4"	2TSP	18	XLP	600	DISTRIBUTED GEN I/O PNL	FUEL STORAGE TANK	FUEL LEVEL SIGNAL	SEE SITE PLAN
P352	3/4"	4	12	XHHW	600	MCC	SUMP PUMP CONTROL PNL	POWER, GROUND	REUSE EXIST. CONDUIT
P500	3/4"	3	12	XHHW	600	SWITCH & PANEL-L1	EXTERNAL LED LIGHTING	POWER, GROUND	
P501	3/4"	3	12	XHHW	600	GFI RECEPTACLE	PANEL L1	POWER, GROUND	
P502	3/4"	3	12	XHHW	600	SWITCH & PANEL-L1	LED LIGHTING	POWER, GROUND	CLASS 1, DIV. AREA
P600	3/4"	3	12	XHHW	600	P.S. CONTROL PNL	DISTRIBUTED GEN I/O PNL	POWER, GROUND	SEE NOTE 1
C600	1"	---	---	---	---		DISTRIBUTED GEN I/O PNL	COMM. CABLE	SEE NOTE 2
C601	1.5"	---	---	---	---	GENERATOR CONTROL PNL	DISTRIBUTED GEN I/O PNL	COMM. CABLE OR SIGNALS	SEE NOTE 3

NOTES:

1. INTEGRATOR SHALL REVIEW THE EXISTING P.S. CONTROL PNL 24 DC LOADING AND UPGRADE COMPONENTS AS REQUIRED TO FACILITATE INSTALLATION OF NEW SERVICE BREAKER TO POWER THE GENERATOR I/O PNL. THE CONTRACTOR SHALL FURNISH AND INSTALL A NEW CIRCUIT WITH BACK-UP POWER CAPABILITIES FROM THE P.S. CONTROL PNL TO THE GENERATOR I/O PANEL.
2. EXTEND PROFINET CABLE FROM PS CONTROL PANEL TO GENERATOR JUNCTION BOX TO DISTRIBUTED GENERATOR I/O PANEL. GENERATOR I/O PANEL SHALL BE INTEGRATED INTO THE REPLACEMENT PLC PACKAGE.
3. CONFIRM CABLING REQUIREMENTS FROM CATERPILLAR REPLACEMENT I/O MODULES TO DISTRIBUTED GENERATOR I/O PANEL DURING THE SHOP DRAWING PROCESS. FURNISH AND INSTALL INDIVIDUAL CONTACT CLOSURE CIRCUITS OR PROVIDE DATA OVER COMMUNICATION CABLE. SEE SPECIFICATION SECITON 16901.
4. COORDINATE POWER SUPPLY REQUIREMENTS DURING SHOP DRAWING PHASE. METERING PUMP MAY BE POWERED VIA GFI RECEPT OR VIA CONTROL PANEL PENDING SELECTED VENDOR.

MITTAUER & ASSOCIATES, INC.
CONSULTING ENGINEERS
580-1 WELLS ROAD, ORANGE PARK, FLORIDA 32073
TEL: (904) 276-0050 FAX: (904) 276-0840 FLORIDA LICENSE C-4593

M&A 0801-40-2

NO.	BY	DATE	REVISIONS
6	X	X	X
5	X	X	X
4	X	X	X
3	X	X	X
2	X	X	X
1	X	X	X

DESIGN ENGINEER
JASON R. SHEPLER, P.E.
FLORIDA REGISTRATION NO. 58760

DESIGNER: JRS
DRAWN BY: VTJ-SA
DATE: JUNE 2020
CHECKED BY: MPT
DATE: JUNE 2020

JEA Building Community

HOLIDAY ROAD MASTER PUMP STATION
SPLITTER BOX REPLACEMENT
ELECTRICAL LEGEND AND SCHEMATICS

PROJ. NO. 8006211
DATE: JUNE 2020
SCALE: AS SHOWN

NO. SHEETS IN SET 21
SHEET NO. 21
DRAWING NO. E-1

M:\cad files\JEA\0801402 holiday rd master ps splitter box replacement\Design\E-1.dwg Current Layout Tab = E-1 Mon Jun 29, 2020 - 15:37
Xrefs Attached=

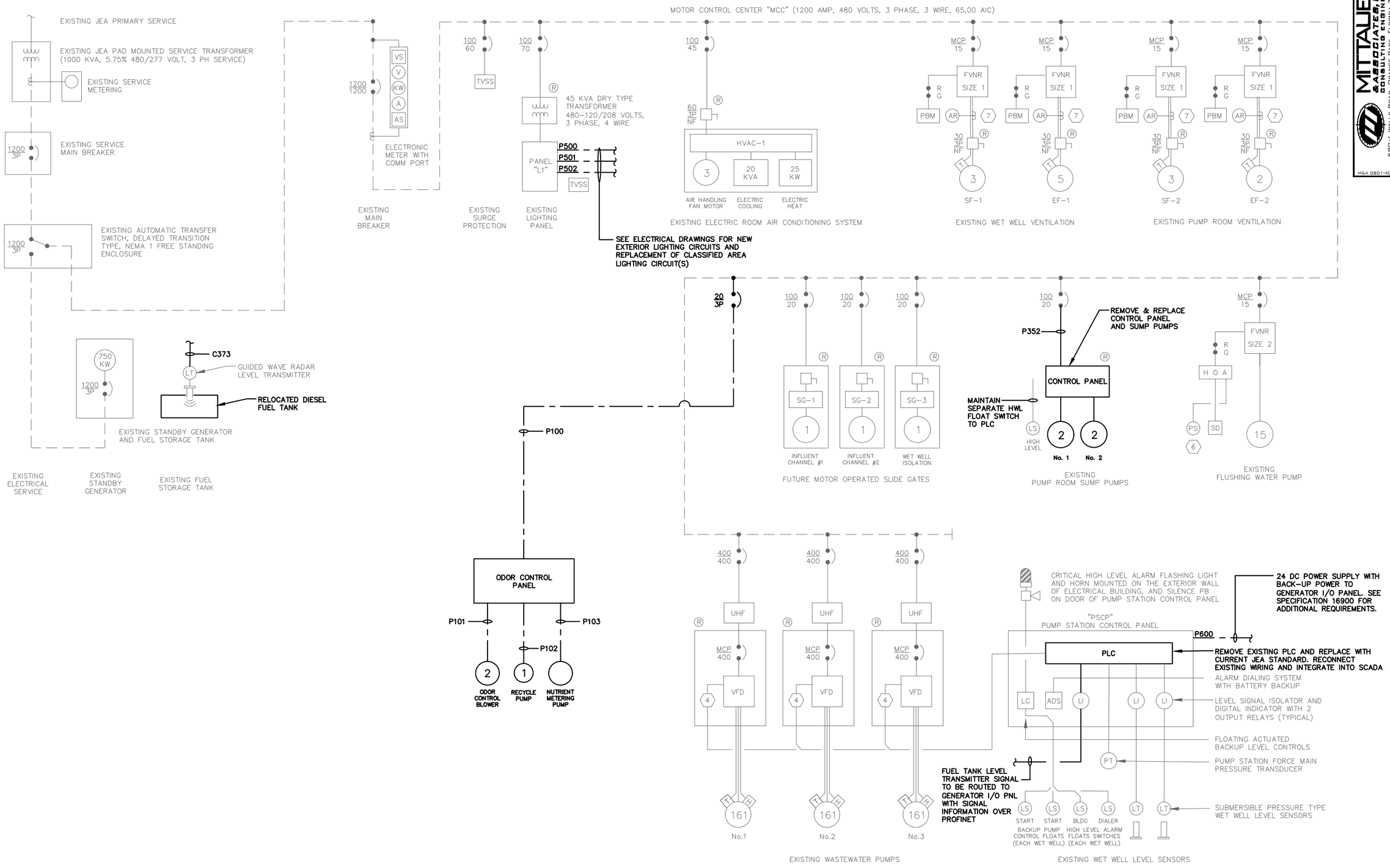

MITTAUER & ASSOCIATES, INC.
CONSULTING ENGINEERS
580-1 WELLS ROAD, ORANGE PARK, FLORIDA 32073
TEL: (904) 276-0050 FAX: (904) 276-0840 FLORIDA LICENSE C-4545
M&A 0801-40-2

NO.	BY	DATE	REVISIONS
6	X	X	X
5	X	X	X
4	X	X	X
3	X	X	X
2	X	X	X
1	X	X	X

DESIGN ENGINEER
JASON R. SHEPLER, P.E.
FLORIDA REGISTRATION NO. 58760

DESIGNER: JRS
DRAWN BY: VTJ/SA
DATE: JUNE 2020
CHECKED BY: MPT
DATE: JUNE 2020

JEA Building Community

HOLIDAY ROAD MASTER PUMP STATION SPLITTER BOX REPLACEMENT SINGLE LINE DIAGRAM

PROJ. NO. 8006211
DATE: JUNE 2020
SCALE: AS SHOWN

NO. SHEETS SET 22
SHEET NO. 22
DRAWING NO. E-2

M:\cad files\JEA\0801402 holiday rd master ps splitter box replacement\Design\E-2.dwg Current Layout Tab = E-2 Mon Jun 29, 2020 - 15:37

Xrefs Attached=

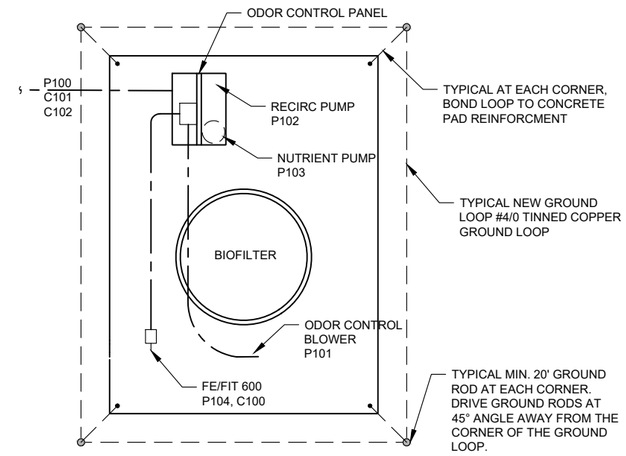

ODOR CONTROL SYSTEM ELEC. SITE PLAN

SCALE: 3" = 1'-0"

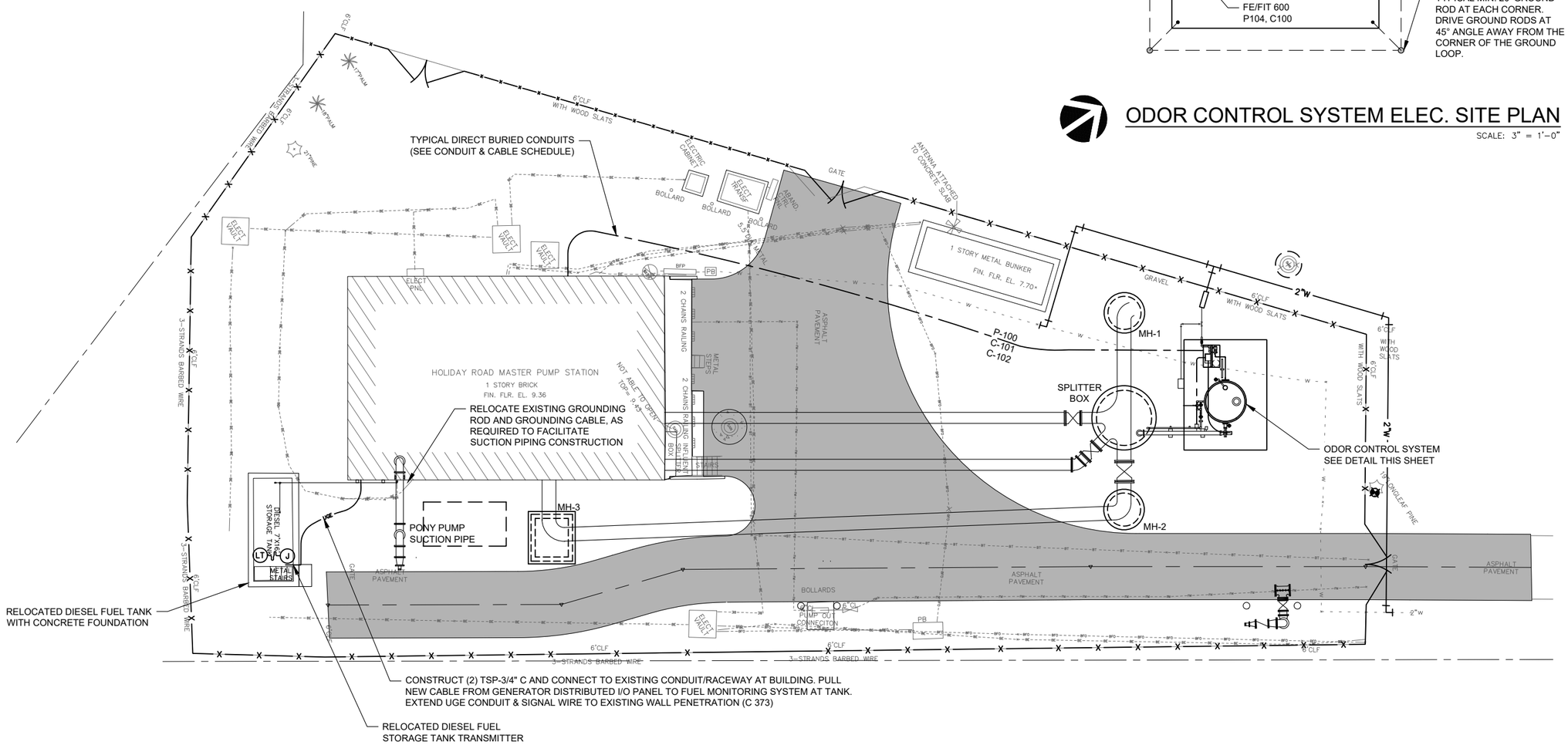

ELECTRICAL SITE PLAN

SCALE: 1" = 10'

MITTAUER & ASSOCIATES, INC. CONSULTING ENGINEERS
580-1 WELLS ROAD, ORANGE PARK, FLORIDA 32073
TEL. (904) 278-0030 FAX. (904) 278-0840 FLORIDA LICENSE CA-6569
M&A 0801-40-2

NO.	BY	DATE	REVISIONS
6.	X	X	X
5.	X	X	X
4.	X	X	X
3.	X	X	X
2.	X	X	X
1.	X	X	X

DESIGN ENGINEER
JASON R. SHEPLER, P.E.
FLORIDA REGISTRATION NO. 58760

DESIGNER: JRS
DRAWN BY: YPJSA
DATE: JUNE 2020
CHECKED BY: MPT
DATE: JUNE 2020

JEA Building Community

HOLIDAY ROAD MASTER PUMP STATION
SPLITTER BOX REPLACEMENT
ELECTRICAL SITE PLAN

PROJ. NO. 8006211
DATE: JUNE 2020
SCALE: AS SHOWN

NO. SHEETS 34
SHEET NO. 23
DRAWING NO. E-3

M:\cad files\JEA\0801402 holiday rd master ps splitter box replacement\Design\E-3.dwg Current Layout Tab = E-3 Mon Jun 29, 2020 - 15:37

Xrefs Attached= C1-C2-M1 [.\C1-C2-M1.dwg]

NOTES:

1. THE SCOPE OF THIS PROJECT WILL REQUIRE EXTENSIVE ELECTRICAL WORK WITHIN "CLASSIFIED" HAZARDOUS LOCATIONS ALL MATERIALS AND INSTALLATION WITHIN THE CLASSIFIED AREAS SHALL BE IN ACCORDANCE WITH THE REQUIREMENTS FOR CLASS I, DIVISION 1 HAZARDOUS LOCATIONS.
2. PROVIDE EXPLOSION PROOF CONDUIT SEALING FITTING FOR EACH CONDUIT EXITING THE CLASSIFIED AREA.
3. NEW CONDUITS FOR EQUIPMENT LOCATED OUTSIDE OF THE CLASSIFIED AREAS SHALL NOT BE ROUTED THROUGH A CLASSIFIED AREA.
4. DEMOLISH EXISTING FEEDERS NO LONGER IN SERVICE. REMOVE CONDUCTORS AND EXPOSED CONDUIT SEGMENTS. REMOVE OUT OF SERVICE LIGHTING FIXTURES AS DIRECTED BY THE OWNER.
5. THERE SHALL NOT BE MORE THAN THREE 90 DEGREE TURNS IN ANY CONDUIT RUN. PROVIDE PULL BOXES AS REQUIRED.
6. THERE SHALL NOT BE SPLICE OF CONDUCTORS IN ANY RUN WITHOUT ENGINEER'S APPROVAL.
7. ALL RACEWAYS SHALL CONTAIN COPPER. THWN/THHN GROUND CONDUCTOR SIZED IN ACCORDANCE WITH NEC, ARTICLE 250, UNLESS OTHERWISE NOTED. MINIMUM CONDUCTOR SIZE SHALL BE #12 AWG UNLESS OTHERWISE NOTED.
8. CONDUIT RUNS SHOWN MAY BE INSTALLED EXPOSED ALONG STRUCTURES INDICATED. PROVIDE WEATHERPROOF OR EXPLOSION PROOF JUNCTION BOXES WHERE REQUIRED AND IDENTIFIED ALL CONDUCTORS IN BOXES.
9. ALL CONSTRUCTION SHALL BE IN ACCORDANCE WITH THE LOCAL BUILDING & ZONING DEPARTMENT REQUIREMENTS AND THE LATEST EDITION OF NFPA NATIONAL ELECTRICAL CODE.
10. THE ELECTRICAL SUBCONTRACTOR SHALL VERIFY ALL EXISTING LIGHTING PANEL CIRCUITS AND LOADING PRIOR TO MODIFYING CIRCUITS.
11. NO MORE THAN THREE CURRENT CARRYING CONDUCTORS WILL BE ALLOWED IN RACEWAY.
12. ALL RACEWAY SHALL CONTAIN A GROUND SIZED IN ACCORDANCE WITH THE NEC, ARTICLE 250.66. BRANCH PANELS SHALL BE GROUNDED IN ACCORDANCE WITH NEC REQUIREMENTS INCLUDING GROUND RODS.
13. UPDATE PANEL SCHEDULE WITH PRINTED RECORD OF CIRCUIT CHANGES AND MODIFICATIONS. PRINTED SCHEDULE SHALL BE PROVIDED TO THE OWNER AND LEFT IN THE PANELBOARD.
14. CONDUIT ROUTINGS ARE SCHEMATIC IN NATURE AND MAY BE MODIFIED UPON APPROVAL BY THE ENGINEER. SEE NOTE 3.

LIGHTING FIXTURE SCHEDULE

TYPE	MANUFACTURER & CATALOG NUMBER	VOLTS	WATTS	MOUNTING	REMARKS
A	LITHONIA 2GTL-_-4-60-L-FW-_-120-4000	120		SUSPENDED	REUSE EXISTING TRAPEZE HANGERS
B	LITHONIA JCBL (18,000 LUM/4,000K/80 CRI)	120		SUSPENDED	PENDANT MOUNT/REUSE EXISTING
B-C	RED SKY BLK - 100-100-272-4000 K-120-HI-CLR-GREY-PEND	120	100	SUSPENDED	CLASS I/DIV I
W-E	LITHONIA TWH-LED 20C - 50K	120	72	WALL MOUNT	CRI 70+. PROVIDE 3-POSITION SWITCH WITH PHOTOCELL TO OPERATE LIGHTS IN AUTO POSITION
W-I	LITHONIA 2GTL-_-4-60-L-FW-_-120-4000	120		SUSPENDED	REUSE EXISTING TRAPEZE HANGERS
W-C	RED SKY LNT - 80-100-277-4000 K-110-CLR-GREY-YOKE	120	80	WALL MOUNT	CLASS I/DIV 1

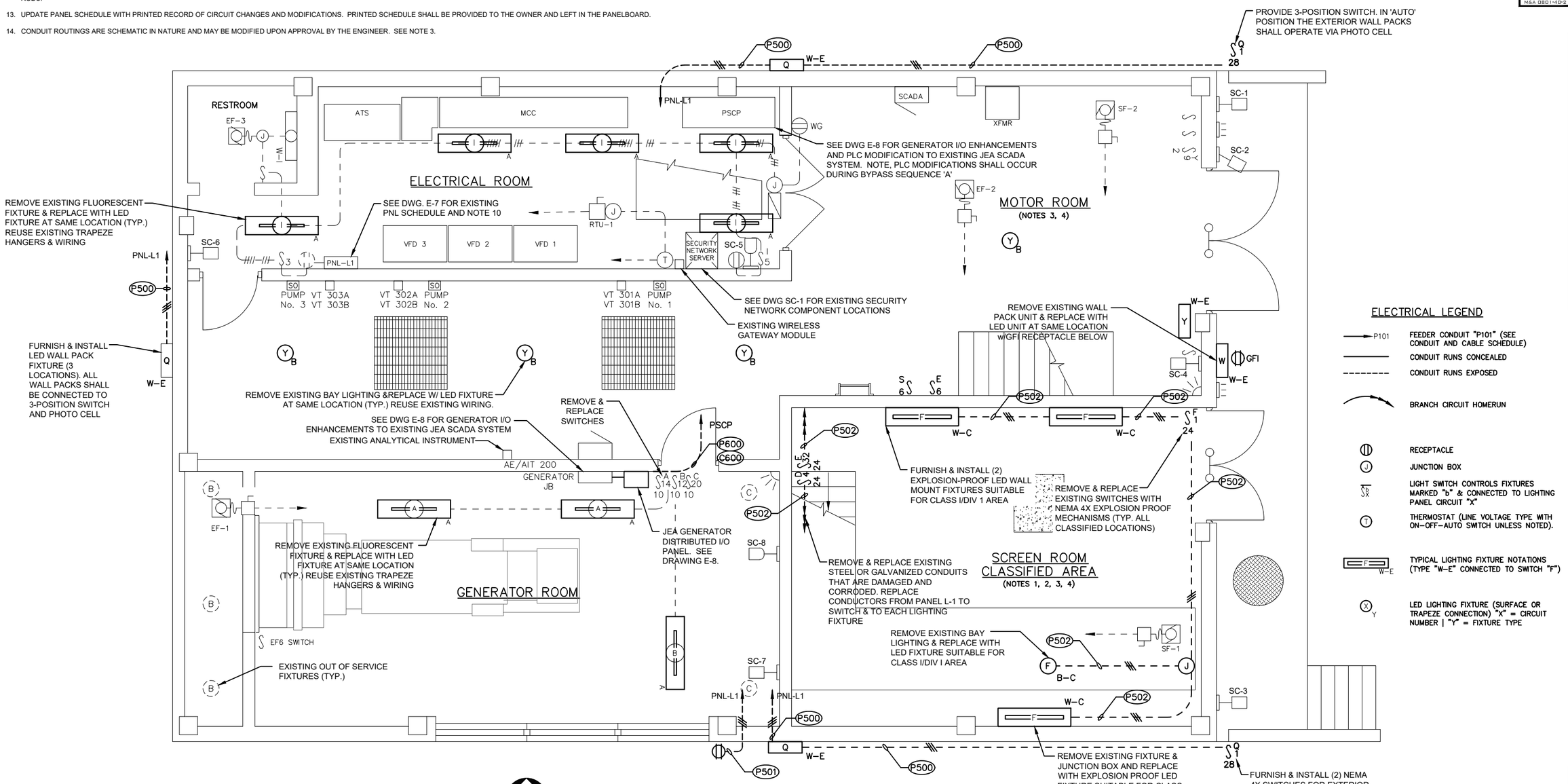

TOP FLOOR ELECTRICAL PLAN

SCALE: 3/8" = 1'-0"

MITTAUER & ASSOCIATES, INC. CONSULTING ENGINEERS
580-1 WELLS ROAD, ORANGE PARK, FLORIDA 32073
TEL: (904) 278-0050 FAX: (904) 278-0840 FLORIDA LICENSE C-4676

NO.	BY	DATE	REVISIONS
6	X	X	X
5	X	X	X
4	X	X	X
3	X	X	X
2	X	X	X
1	X	X	X

M&A 0801-40-2

DESIGN ENGINEER
JASON R. SHEPLER, P.E.
FLORIDA REGISTRATION NO. 58760

DESIGNER: JRS
DRAWN BY: VTJ/JSA
DATE: JUNE 2020
CHECKED BY: MPT
DATE: JUNE 2020

JEA Building Community

HOLIDAY ROAD MASTER PUMP STATION
SPLITTER BOX REPLACEMENT
TOP FLOOR ELECTRICAL PLAN

PROJ. NO. 8006211
DATE: JUNE 2020
SCALE: AS SHOWN

NO. SHEETS 24
SHEET NO. 24
DRAWING NO. E-4

M:\cad files\JEA\0801402 holiday rd master ps splitter box replacement\Design\E-4.dwg Current Layout Tab = E-4 Mon Jun 29, 2020 - 15:37

Xrefs Attached=

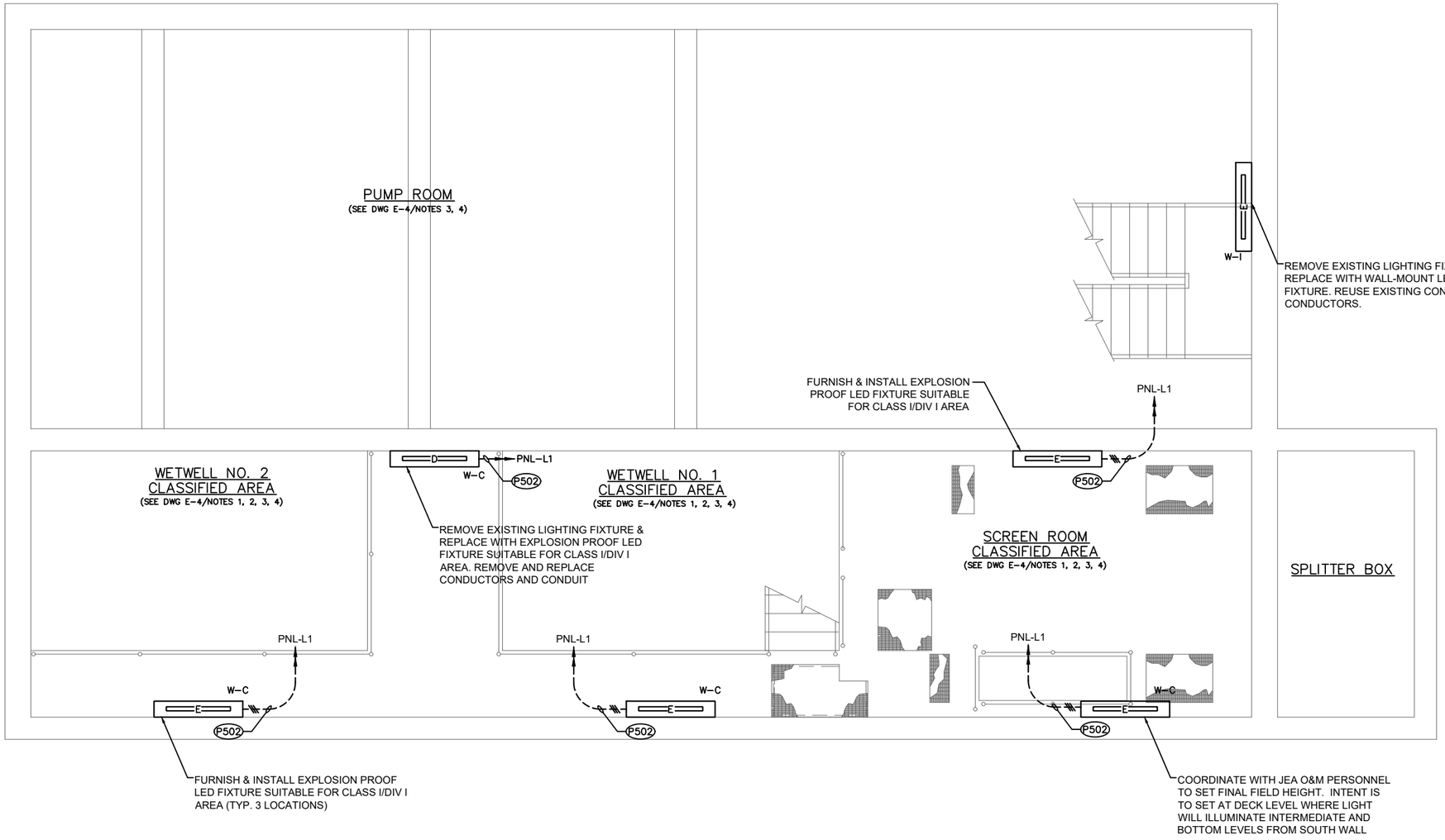

INTERMEDIATE ELECTRICAL PLAN

SCALE: 3/8" = 1'-0"

MITTAUER & ASSOCIATES, INC.
CONSULTING ENGINEERS
580-1 WELLS ROAD, ORANGE PARK, FLORIDA 32073
TEL. (904) 278-0030 FAX. (904) 278-0840 FLORIDA LICENSE C-6569
M&A 0801-40-2

NO.	BY	DATE	REVISIONS
6.	X	X	X
5.	X	X	X
4.	X	X	X
3.	X	X	X
2.	X	X	X
1.	X	X	X

DESIGN ENGINEER
JASON R. SHEPLER, P.E.
FLORIDA REGISTRATION NO.
58760

DESIGNER: JRS
DRAWN BY: YPJSA
DATE: JUNE 2020
CHECKED BY: MPT
DATE: JUNE 2020

JEA Building Community

HOLIDAY ROAD MASTER PUMP STATION
SPLITTER BOX REPLACEMENT
INTERMEDIATE ELECTRICAL PLAN

PROJ. NO. 8006211
DATE: JUNE 2020
SCALE: AS SHOWN

NO. SHEETS 34
SHEET NO. 25
DRAWING NO. E-5

M:\cad files\JEA\0801402 holiday rd master ps splitter box replacement\Design\E-5.dwg Current Layout Tab = E-5 Mon Jun 29, 2020 - 15:37

Xrefs Attached=

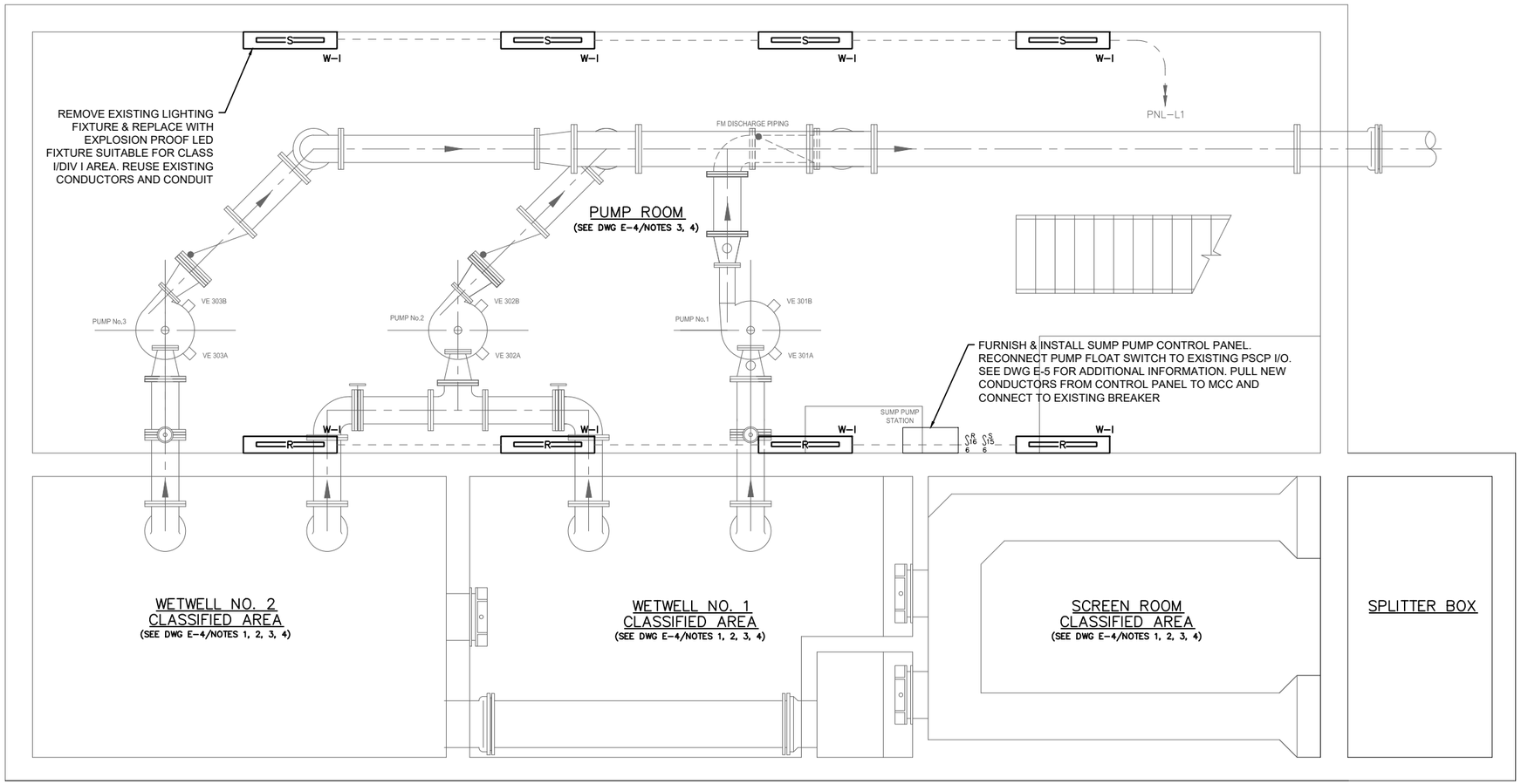

BOTTOM ELECTRICAL PLAN

SCALE: 3/8" = 1'-0"

MITTAUER & ASSOCIATES, INC.
CONSULTING ENGINEERS
580-1 WELLS ROAD, ORANGE PARK, FLORIDA 32073
TEL: (904) 278-0030 FAX: (904) 278-9840 FLORIDA LICENSE: EC-4549

M&A 0801-40-2

NO.	BY	DATE	REVISIONS
6	X	X	X
5	X	X	X
4	X	X	X
3	X	X	X
2	X	X	X
1	X	X	X

DESIGN ENGINEER
JASON R. SHEPLER, P.E.
FLORIDA REGISTRATION NO. 58760

DESIGNER: JRS
DRAWN BY: TTJ/SA
DATE: JUNE 2020
CHECKED BY: MPT
DATE: JUNE 2020

JEA Building Community

HOLIDAY ROAD MASTER PUMP STATION
SPLITTER BOX REPLACEMENT
BOTTOM ELECTRICAL PLAN

PROJ. NO. 8006211
DATE: JUNE 2020
SCALE: AS SHOWN

NO. SHEETS 26
SHEET NO. 26
DRAWING NO. E-6

M:\cad files\JEA\8801402 holiday rd master ps splitter box replacement\Design\E-6.dwg Current Layout Tab = E-6 Mon Jun 29, 2020 - 15:37

Xrefs Attached=

EXISTING LIGHTING PANEL 'L1'					120/208V, 3 PHASE, 4 WIRE 150 AMP MAIN BREAKER, NEMA 12			
CIRCUIT NO.	TRIP AMPS	NO. POLES	VOLT AMPS	REMARKS	CIRCUIT NO.	TRIP AMPS	NO. POLES	VOLT AMPS	REMARKS
1	20	1	1000	LTGS – EMERGENCY	2	20	1	1200	LTGS – MOTOR ROOM
3	20	1	300	LTGS – EXTERIOR	4	20	1	600	RCTS – MOTOR ROOM
5	20	1	700	LTGS – ELEC ROOM	6	20	1	900	LTGS – PUMP ROOM
7	20	1	600	RCTS – ELEC ROOM	8	20	1	400	RCTS – PUMP ROOM
9	20	1	200	RCTS – ROOF	10	20	1	800	LTGS – GENERATOR ROOM
11	20	1	1000	PSCP – SECTION No. 1	12	20	1	800	RCTS – GENERATOR ROOM
13	20	1	1000	PSCP – SECTION No. 2	14	20	1	1000	GENERATOR – DAY TANK
15	20	1	500	SCADA RADIO	16	20	1	500	GENERATOR – BATTERY CHARGER
17	20	1	–	SPARE	18	15	1	3000	GENERATOR – JKT HEATER NO. 1
19	20	1	–	SPARE	20	15	1	3000	GENERATOR – JKT HEATER NO. 2
21	20	1	–	SPARE	22	15	1	200	RCTS – SCREEN ROOM
23	20	1	–	SPARE	24	15	1	200	LTGS – SCREEN ROOM
25	20	1	–	SPARE	26	15	1	800	LTGS – WETWELL
27	20	1	–	SPARE	28	20	1	–	**EXTERIOR LIGHTING** (3)
29	20	1	–	SPARE	30	20	1	–	**EXTERIOR GFI RECEPTACLE** (3)
31	–	1	–	SPACE	32	–	1	–	SPACE
33	–	1	–	SPACE	34	–	1	–	SPACE
35	–	1	–	SPACE	36	–		–	SPACE
37	–	1	–	SPACE	38	30	3	–	TVSS
39	–	1	–	SPACE	40				
41	–	1	–	SPACE	42				

EXISTING LIGHTING PANEL L1 SCHEDULE

EXISTING PLC DIGITAL INPUT/OUTPUT SCHEDULE (1)

RACK 2 SLOT 4		SM321	RACK 2 SLOT 5		SM321	RACK 2 SLOT 6		SM321	RACK 2 SLOT 7		SM321	RACK 2 SLOT 8		SM321	RACK 2 SLOT 9		SM322	RACK 2 SLOT 10		SM322
16 DIGITAL INPUTS			16 DIGITAL INPUTS			16 DIGITAL INPUTS			16 DIGITAL INPUTS			16 DIGITAL INPUTS			16 DIGITAL OUTPUTS			16 DIGITAL OUTPUTS		
IO	WIRE#	SIGNAL DESCRIPTION	IO	WIRE#	SIGNAL DESCRIPTION	IO	WIRE#	SIGNAL DESCRIPTION	IO	WIRE#	SIGNAL DESCRIPTION	IO	WIRE#	SIGNAL DESCRIPTION	IO	WIRE#	SIGNAL DESCRIPTION	IO	WIRE#	SIGNAL DESCRIPTION
IN00	52 4/32.0	PUMP 1 RUNNING	IN00	59 5/36.0	PUMP 2 RUNNING	IN00	67 6/40.0	PUMP 3 RUNNING	IN00		SPARE	IN00		SPARE	OUT00	170 9/52.0	? PUMP 1 LEAD	OUT00	171 10/56.0	? (PUMP 2 LEAD) (2)
IN01	54 4/32.1	PUMP 1 FAULT	IN01	61 5/36.1	PUMP 2 FAULT	IN01	69 6/40.1	PUMP 3 FAULT	IN01		SPARE	IN01		SPARE	OUT01	164 9/52.1	START PUMP 1	OUT01	166 10/56.1	PUMP 2 START
IN02		SPARE	IN02	5/36.2	IR CAMERA 1	IN02		SPARE	IN02		SPARE	IN02		SPARE	OUT02	165 9/52.2	PUMP 1 RESET	OUT02		SPARE
IN03		SPARE	IN03	5/36.3	IR CAMERA 2	IN03		SPARE	IN03		SPARE	IN03	80 8/48.3	? (WETWELL EXH RUNNING) (2)	OUT03		SPARE	OUT03		SPARE
IN04		SPARE	IN04	5/36.4	IR CAMERA 3	IN04	76 6/40.4	? (2)	IN04		SPARE	IN04	81 8/48.4	? (WETWELL SUPPLY FAN RUNNING) (2)	OUT04		SPARE	OUT04		SPARE
IN05		SPARE	IN05	5/36.5	IR CAMERA 4	IN05	75 6/40.5	? (2)	IN05		SPARE	IN05		SPARE	OUT05		SPARE	OUT05		SPARE
IN06	53 4/33.6	PUMP 1 CV OPEN	IN06	60 5/36.6	PUMP 2 CV OPEN	IN06	68 M6/40.6	PUMP 3 CV OPEN	IN06		SPARE	IN06		SPARE	OUT06		SPARE	OUT06		SPARE
IN07	72 4/32.7	? (2)	IN07	73 5/36.7	? (2)	IN07	74 6/40.7	? (2)	IN07		SPARE	IN07		SPARE	OUT07	173 9/52.7	? (WETWELL 1 IN CONTROL) (2)	OUT07	174 10/56.7	? (WETWELL 2 IN CONTROL) (2)
IN00		SPARE	IN00		SPARE	IN00		SPARE	IN00		SPARE	IN00		SPARE	OUT00	172 9/53.0		OUT00		SPARE
IN01	51 4/33.1	PUMP 1 IN AUTO	IN01	58 5/37.1	PUMP 2 IN AUTO	IN01	65 6/41.1	PUMP 3 IN AUTO	IN01		SPARE	IN01	41 8/49.1	LAMP TEST / ALARM ACKNOWLEDGE	OUT01	168 9/53.1	? (PUMP 3 LEAD) (2)	OUT01		SPARE
IN02	49 4/33.2	GENERATOR FAULT	IN02	50 5/37.2	PUMP 1 READY	IN02		SPARE	IN02		SPARE	IN02	43 8/49.2	PLC ON BATTERY	OUT02	163 9/53.2	? (2)	OUT02		SPARE
IN03	45 4/33.3	EMERGENCY SOURCE AVAIL ABLE	IN03	57 5/37.3	PUMP 2 READY	IN03		SPARE	IN03		SPARE	IN03	8/49.3	? (RADIO 120V SUPPLY) (2)	OUT03		SPARE	OUT03		SPARE
IN04	44 4/33.4	NORMAL POWER AVAILABLE	IN04	64 5/37.4	PUMP 3 READY	IN04	55 6/41.4	PUMP 1 OVERTEMP	IN04	56 7/45.4	PUMP 1 SEAL FAIL	IN04		SPARE	OUT04		SPARE	OUT04		SPARE
IN05	48 4/33.5	GENERATOR RUNNING	IN05		SPARE	IN05	62 6/41.5	PUMP 2 OVERTEMP	IN05	63 7/45.5	PUMP 2 SEAL FAIL	IN05		SPARE	OUT05	162 9/53.5	REMOTE STOP / LOCKOUT	OUT05		SPARE
IN06	46 4/33.6	ATS IN NORMAL	IN06	42 5/37.6	BACKUP FLOAT CONTROL	IN06	70 6/41.6	PUMP 3 OVERTEMP	IN06	71 7/45.6	PUMP 3 SEAL FAIL	IN06	79 8/49.6	DRY WELL HIGH LEVEL	OUT06		SPARE	OUT06		OR1.5 (NO LABEL)
IN07	47 4/33.7	ATS IN EMERGENCY	IN07		SPARE	IN07		SPARE	IN07		SPARE	IN07	48 8/49.7	? (WETWELL HIGH LEVEL) (2)	OUT07	161 9/53.7	BATTERY TEST	OUT07	163 10/57.7	ALARM SILENCE / LAMP TEST

EXISTING PLC DIGITAL INPUT/OUTPUT SCHEDULE

NOTES:

(1) WIRING SCHEDULE BASED ON RECORD INFORMATION AND FIELD REVIEW. JEA HAS COMPLETED MODIFICATIONS TO THE EXISTING BACKPLATE SINCE COMPLETION OF THE SCHEDULE PRESENTED HEREIN. THE INTEGRATOR SHALL FIELD CONFIRM ALL EXISTING WIRING TERMINATIONS, EXISTING PLC PROGRAMMING, AND EXISTING FIELD INSTRUMENT CONNECTIONS.

(2) EXISTING WIRING MODE OF OPERATION AND RESULTANT EQUIPMENT CONNECTION REQUIRES FUTURE FIELD CONFIRMATION.

(3) EXTEND CONDUCTORS TO PANEL L1 AND CONNECT TO EXISTING SPARE BREAKER

(4) DURING REPLACEMENT OF THE PLC BACKPLATE, THE CONTRACTOR SHALL COMPLETE THE FOLLOWING MODIFICATIONS TO THE PUMP STATION CONTROL PANEL:

A. REPLACE ALL DPDT 8 PIN BASIC RELAYS WITH EATON D 3RF2A (120 V) UNITS, OR APPROVED EQUAL, WITH TEST FLAG & LIGHT.

B. REPLACE EDCO ANALOG SURGE ARRESTORS WITH CITEL MODEL DLAW–24D3 SURGE ARRESTORS.

EXISTING PLC ANALOG INPUT/OUTPUT SCHEDULE (1)

I/O MODULE 6	SM 331	I/O MODULE 7	SM 331	I/O MODULE 8	SM 331
8 ANALOG INPUTS		2 ANALOG INPUTS		4 ANALOG OUTPUTS	
I/O	SIGNAL DESCRIPTION	I/O	SIGNAL DESCRIPTION	I/O	SIGNAL DESCRIPTION
IN00	WETWELL 1 LEVEL TRANSDUCER	IN00	BATTERY VOLTAGE	OUT00	PUMP 1 SPEED COMMAND
IN01	FORCE MAIN PRESSURE TRANSUCER	IN01	SPARE	OUT01	PUMP 2 SPEED COMMAND
IN02	FUEL LEVEL TANK LEVEL TRANSMITTER			OUT02	PUMP 3 SPEED COMMAND
IN03	WETWELL 2 LEVEL TRANSDUCER			OUT03	SPARE
IN04	PUMP 1 SPEED				
IN05	PUMP 2 SPEED				
IN06	PUMP 3 SPEED				
IN07	SPARE				

EXISTING PLC ANALOG INPUT/OUTPUT SCHEDULE

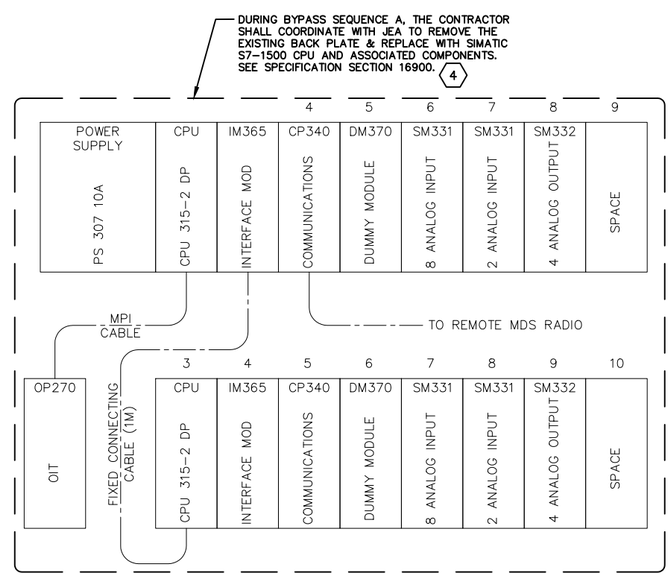

EXISTING PLC CONFIGURATION BLOCK DIAGRAM

MITTAUER & ASSOCIATES, INC.
CONSULTING ENGINEERS
580-1 WELLS ROAD, ORANGE PARK, FLORIDA 32073
TEL: (904) 278-0050 FAX: (904) 278-0840 FLORIDA LICENSE C-4676

NO.	BY	DATE	REVISIONS
6	X	X	X
5	X	X	X
4	X	X	X
3	X	X	X
2	X	X	X
1	X	X	X

M&A 0801-40-2

DESIGN ENGINEER
JASON R. SHEPLER, P.E.
FLORIDA REGISTRATION NO. 58760

DESIGNER: JRS
DRAWN BY: VTI/JSA
DATE: JUNE 2020
CHECKED BY: MPT
DATE: JUNE 2020

JEA Building Community

HOLIDAY ROAD MASTER PUMP STATION
SPLITTER BOX REPLACEMENT
ELECTRICAL SCHEDULES & DETAILS

PROJ. NO. 8006211
DATE: JUNE 2020
SCALE: AS SHOWN

NO. SHEETS 34
SHEET NO. 27
DRAWING NO. E-7

M:\cad files\JEA\0801402 holiday rd master ps splitter box replacement\Design\E-7.dwg Current Layout Tab = E-7 Mon Jun 29, 2020 - 15:37

Xrefs Attached=

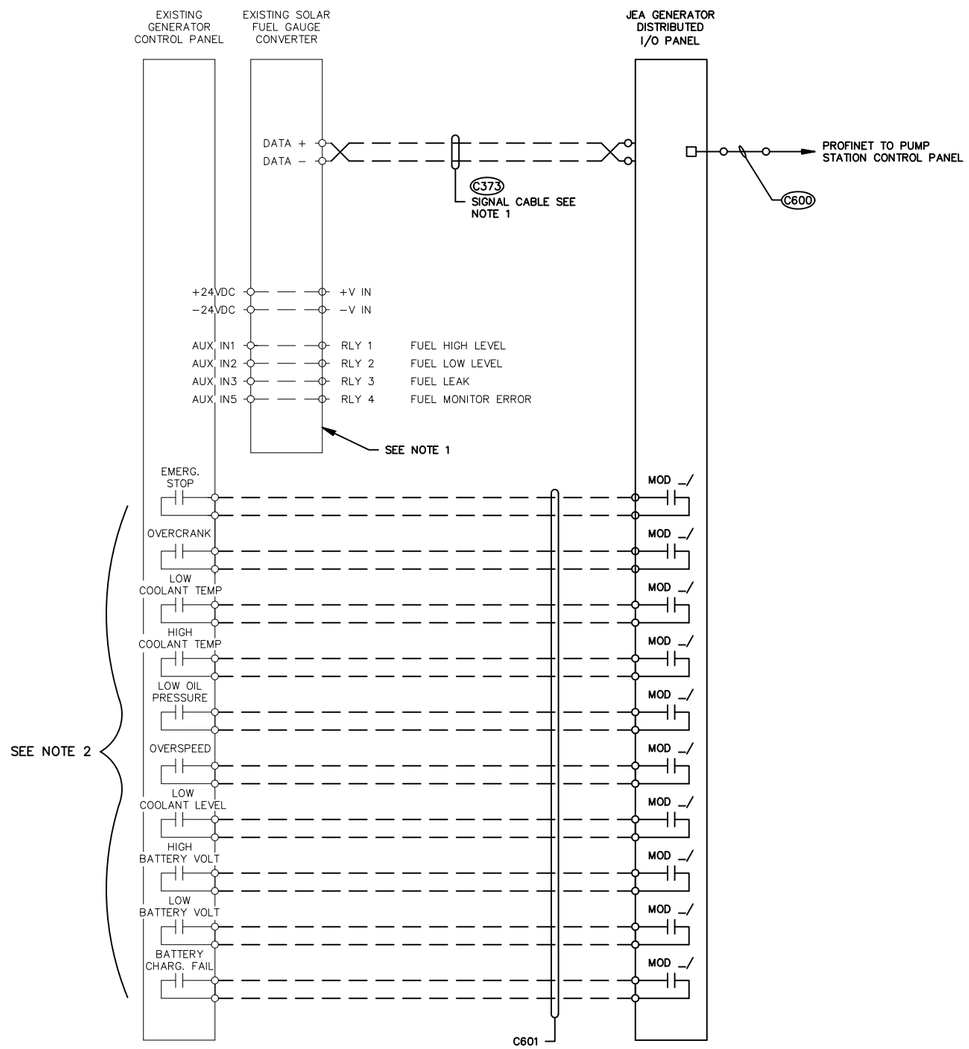

STANDBY GENERATOR, FUEL STORAGE TANK AND CONTROLS MONITORING CONTROL WIRING DIAGRAM

NOTES:

1. EXTEND ANALOG CABLING FROM RELOCATED FUEL TANK TO JEA GENERATOR I/O PANEL.
2. THE CONTRACTOR SHALL COORDINATE WITH CATERPILLAR TO FURNISH & INSTALL (2) I/O MODULES WITHIN THE EXISTING CONTROL PANEL AND EXTEND CABLING (DISCREET SIGNALS OR DATA OVER NETWORK CABLING) TO THE JEA GENERATOR DISTRIBUTED I/O PANEL. SEE SPECIFICATION SECTION 16901 FOP ADDITIONAL REQUIREMENTS.

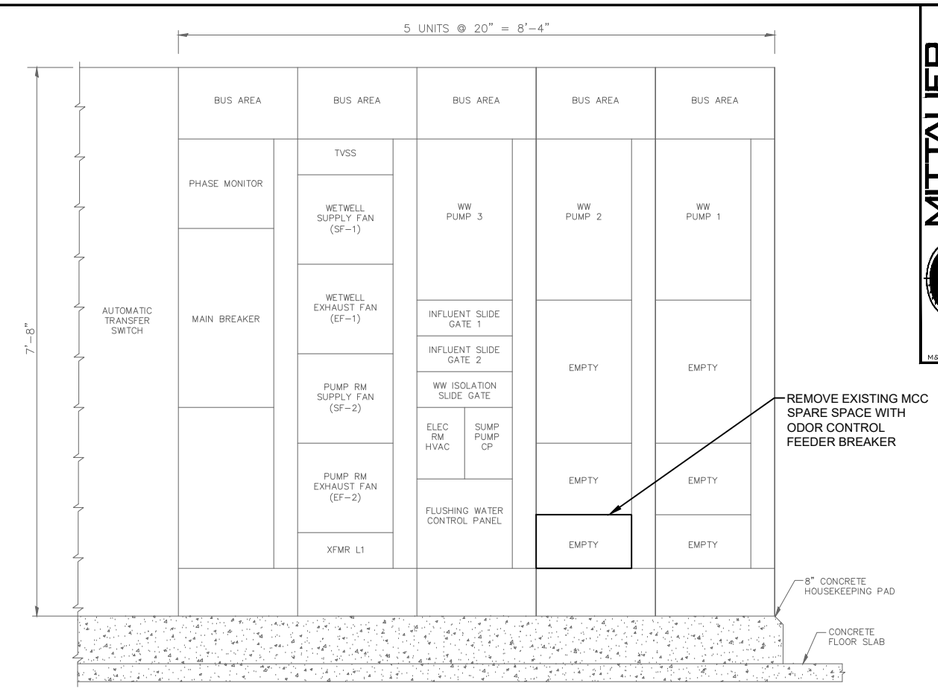

EXISTING MCC - LOCATED IN ELECTRICAL ROOM

1" = 1'-0"

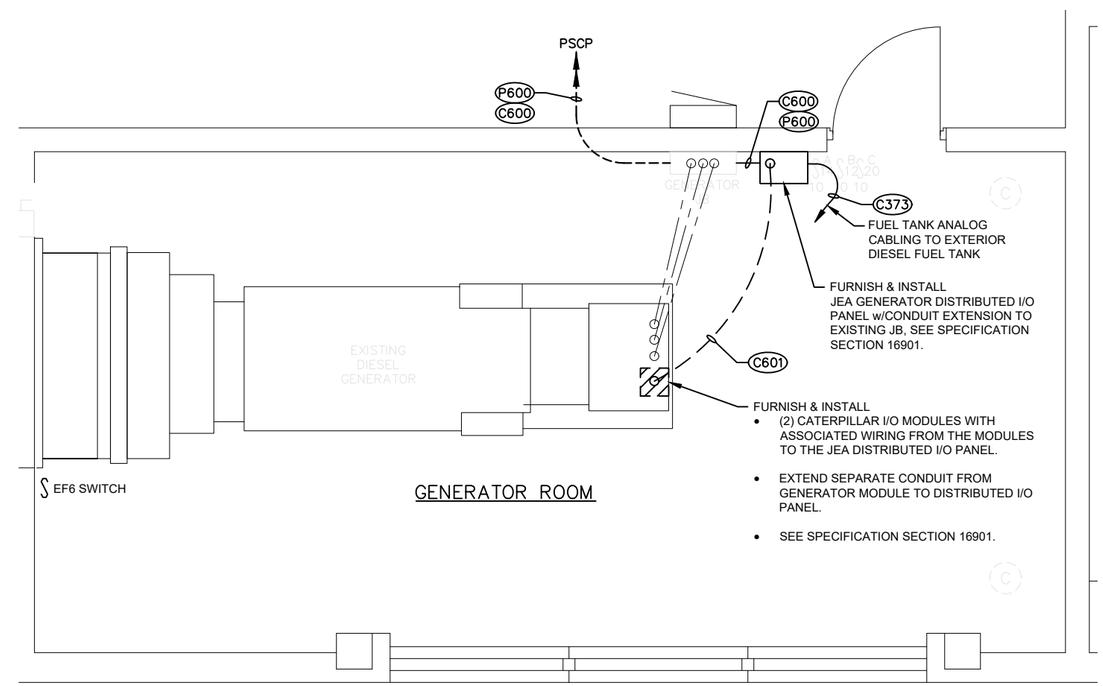

GENERATOR SCADA IMPROVEMENT DETAIL

1/2" = 1'-0"

MITTAUER & ASSOCIATES, INC. CONSULTING ENGINEERS
580-1 WELLS ROAD, ORANGE PARK, FLORIDA 32073
TEL: (904) 278-0030 FAX: (904) 278-0840 FLORIDA LICENSE CA-6569
M&A 0801-40-2

NO.	BY	DATE	REVISIONS
6.	X	X	X
5.	X	X	X
4.	X	X	X
3.	X	X	X
2.	X	X	X
1.	X	X	X

DESIGN ENGINEER
JASON R. SHEPLER, P.E.
FLORIDA REGISTRATION NO. 58760

DESIGNER: JRS
DRAWN BY: YPJSA
DATE: JUNE 2020
CHECKED BY: MPT
DATE: JUNE 2020

JEA Building Community

HOLIDAY ROAD MASTER PUMP STATION
SPLITTER BOX REPLACEMENT
ELECTRICAL DETAILS

PROJ. NO. 8006211
DATE: JUNE 2020
SCALE: AS SHOWN

NO. SHEETS 34
SHEET NO. 28
DRAWING NO. E-8

M:\cad files\JEA\0801402 holiday rd master ps splitter box replacement\Design\E-8.dwg Current Layout Tab = E-8 Mon Jun 29, 2020 - 15:37

Xrefs Attached=

INSTRUMENT IDENTIFICATION

EXAMPLE SYMBOLS

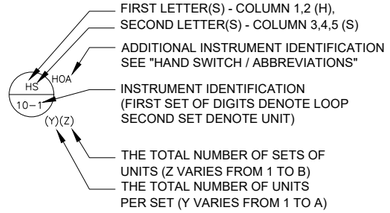

HAND SWITCH / ABBREVIATIONS

AO = AUTO/OFF
AM = AUTO/MANUAL
CAM = COMPUTER/AUTO/MANUAL
CM = COMPUTER/MANUAL
CL = COMPUTER/LOCAL
E-STOP = EMERGENCY STOP
ED = ENABLE/DISABLE
FR = FORWARD/REVERSE
FOR = FORWARD/OFF/REVERSE
FS = FAST/SLOW
FOS = FAST/OFF/SLOW
HOA = HAND/OFF/AUTO
LLS = LEAD/LAG/STANDBY
LOC = LOCAL/OFF/COMPUTER
LOR = LOCAL/OFF/REMOTE
LOS = LOCKOUT/STOP
LA = LOCAL/AUTO
LR = LOCAL/REMOTE
OC = OPEN/CLOSED
OCA = OPEN/CLOSED/AUTO
OO = ON/OFF
OOA = ON/OFF/AUTO
OOR = ON/OFF/REMOTE
OSC = OPEN/STOP/CLOSED
RSL = RAISE/STOP/LOWER
SS = START/STOP
SSR = SUPERVISORY SET-POINT (BY COMPUTER), AUTO/MANUAL CONTROL STATION
SOR = START/OFF/RESET

INSTRUMENT IDENTIFICATION LETTERS TABLE

	FIRST LETTERS		SECOND LETTERS		
	COLUMN 1	COLUMN 2	COLUMN 3	COLUMN 4	COLUMN 5
	MEASURED/INITIATING VARIABLE	VARIABLE MODIFIER	READOUT/PASSIVE	OUTPUT/ACTIVE FUNCTION	FUNCTION MODIFIER
A	ANALYSIS		ALARM		
B	BURNER, COMBUSTION		AUTO	USER'S CHOICE	USER'S CHOICE
C	USER'S CHOICE				
D	USER'S CHOICE	DIFFERENCE, DIFFERENTIAL			DEVIATION
E	VOLTAGE		SENSOR, PRIMARY ELEMENT		
F	FLOW, FLOW RATE	RATIO			
G	USER'S CHOICE		GLASS, GAUGE, VIEWING DEVICE		
H	HAND				HIGH
I	CURRENT		INDICATE		
J	POWER		SCAN		
K	TIME, SCHEDULE	TIME RATE OF CHANGE		CONTROL STATION	
L	LEVEL		LIGHT		LOW
M	PUMP OR MOTOR				MIDDLE, INTERMEDIATE
N	USER'S CHOICE		READY	USER'S CHOICE	USER'S CHOICE
O	USER'S CHOICE		ORIFICE, RESTRICTION		OPEN
P	PRESSURE		POINT (TEST CONNECTION)		
Q	QUANTITY	INTEGRATE, TOTALIZE	INTEGRATE, TOTALIZE		
R	RADIATION		RECORD		RUN
S	SPEED, FREQUENCY	SAFETY		SWITCH	STOP
T	TEMPERATURE			TRANSMIT	
U	MULTIVARIABLE		MULTIFUNCTION	MULTIFUNCTION	
V	VIBRATION, MECHANICAL ANALYSIS			VALVE, DAMPER, LOUVER	
W	WEIGHT, FORCE		WELL, PROBE		
X	UNCLASSIFIED	X-AXIS	ACCESSORY DEVICES, UNCLASSIFIED	UNCLASSIFIED	UNCLASSIFIED
Y	EVENT, STATE, PRESENCE	Y-AXIS		AUXILLARY DEVICES	
Z	POSITION, DIMENSION	Z-AXIS, SAFETY INSTRUMENTED SYSTEM		DRIVER, ACTUATOR, UNCLASSIFIED FINAL CONTROL ELEMENT	

LINE LEGEND

PROCESS (CLOSED CONDUIT, DASHED LINE INDICATES ALTERNATE FLOW STREAM)
PROCESS (EXISTING)
PROCESS (OPEN CHANNEL)
DOUBLE WALL CONTAINMENT
A — ANALOG SIGNAL (4 TO 20 mA dc, ETC.)
DISCRETE SIGNAL (ON/OFF, ETC.)
PNEUMATIC SIGNAL
CAPILLARY TUBE
DATA LINK
PN — PROFINET DATA LINK
PB — PROFIBUS DATA LINK
S — SERIAL SIGNAL
FO — FIBER OPTIC
PN FO — PROFINET ON FIBER OPTIC
PB FO — PROFIBUS ON FIBER OPTIC
PACKAGE SYSTEM EQUIPMENT
EQUIPMENT/PROCESS BOUNDARY
BUILDING OR FACILITY BOUNDARY
HEAT TRACED

PARALLELING LINES
(2) (A)
3(2) (B)
(A) TOTAL OF 2 SIGNALS
(B) 3 TYPICAL SETS OF 2 SIGNALS EACH. TOTAL OF 6 SIGNALS.

CONNECTING LINES

NON-CONNECTING LINES

DISCRETE INPUT
DISCRETE OUTPUT
X
ANALOG INPUT (X=TC - THERMOCOUPLE INPUT, RTD - RTD INPUT)
ANALOG OUTPUT

GENERAL INSTRUMENT OR FUNCTION SYMBOLS

PILOT LIGHT ON FIELD MOUNTED INSTRUMENT
PILOT LIGHT ON INSTRUMENT OR DEVICE LOCATED IN OR ON FRONT OF CENTRAL OR MAIN PANEL/CONSOLE. OPERATOR ACCESSIBLE
PILOT LIGHT ON INSTRUMENT OR DEVICE LOCATED IN OR ON FRONT OF MCC OR REMOTE PANEL/CONSOLE. OPERATOR ACCESSIBLE
FIELD MOUNTED INSTRUMENT
INSTRUMENT OR DEVICE LOCATED IN OR ON FRONT OF CENTRAL OR MAIN PANEL/CONSOLE. OPERATOR ACCESSIBLE
INSTRUMENT OR DEVICE LOCATED IN OR ON FRONT OF MCC OR REMOTE PANEL/CONSOLE. OPERATOR ACCESSIBLE

VISIBLE ON VIDEO DISPLAY LOCATED ON FRONT OF CENTRAL OR MAIN PANEL/CONSOLE (SCADA). OPERATOR ACCESSIBLE
VISIBLE ON VIDEO DISPLAY LOCATED ON FRONT OF MCC. OPERATOR ACCESSIBLE
PN — FIELDBUS IMPLEMENTED FUNCTION LOCATED ON FIELD DEVICE. PB = PROFIBUS, PN = PROFINET, EN = ETHERNET, MB = MODBUS, MAY OR MAY NOT BE OPERATOR ACCESSIBLE
PN — PLC IMPLEMENTED FUNCTION
PN — FIELDBUS IMPLEMENTED FUNCTION LOCATED ON MCC. PB = PROFIBUS, PN = PROFINET, EN = ETHERNET, MB = MODBUS, MAY OR MAY NOT OPERATOR ACCESSIBLE

TRANSDUCERS

A ANALOG
D DIGITAL
E VOLTAGE
F FREQUENCY
H HYDRAULIC
I CURRENT
P PNEUMATIC
PF PULSE FREQUENCY
PD PULSE DURATION
R RESISTANCE

EXAMPLE:

I/P — CURRENT TO PNEUMATIC TRANSDUCER (BACK OF PANEL, IN A FLOW LOOP)

GENERAL NOTES

1. THIS IS A STANDARD LEGEND. THEREFORE, NOT ALL OF THIS INFORMATION MAY BE USED ON THIS PROJECT.

MITTAUER & ASSOCIATES, INC.
CONSULTING ENGINEERS
580-1 WELLS ROAD, ORANGE PARK, FLORIDA 32073
TEL: (904) 278-0030 FAX: (904) 278-0040 FLORIDA LICENSE C-4635

NO.	BY	DATE	REVISIONS
6	X	X	X
5	X	X	X
4	X	X	X
3	X	X	X
2	X	X	X
1	X	X	X

M&A 0801-40-2

DESIGN ENGINEER
JASON R. SHEPLER, P.E.
FLORIDA REGISTRATION NO. 58760

DESIGNER: JRS
DRAWN BY: JRS
DATE: MAY 2020
CHECKED BY: MPT
DATE: MAY 2020

JEA Building Community

HOLIDAY ROAD MASTER PUMP STATION
SPLITTER BOX REPLACEMENT
GENERAL INSTUMENT NOTES, LEGEND & ABBREVIATIONS

PROJ. NO. 8006211
DATE: MAY 2020
SCALE: NONE

NO. SHEETS 35
SHEET NO. 29
DRAWING NO. I-1

M:\cad files\JEA\0801402 holiday rd master ps splitter box replacement\Design\I-1.dwg Current Layout Tab = I-1 Mon Jun 29, 2020 – 15:37

Xrefs Attached=

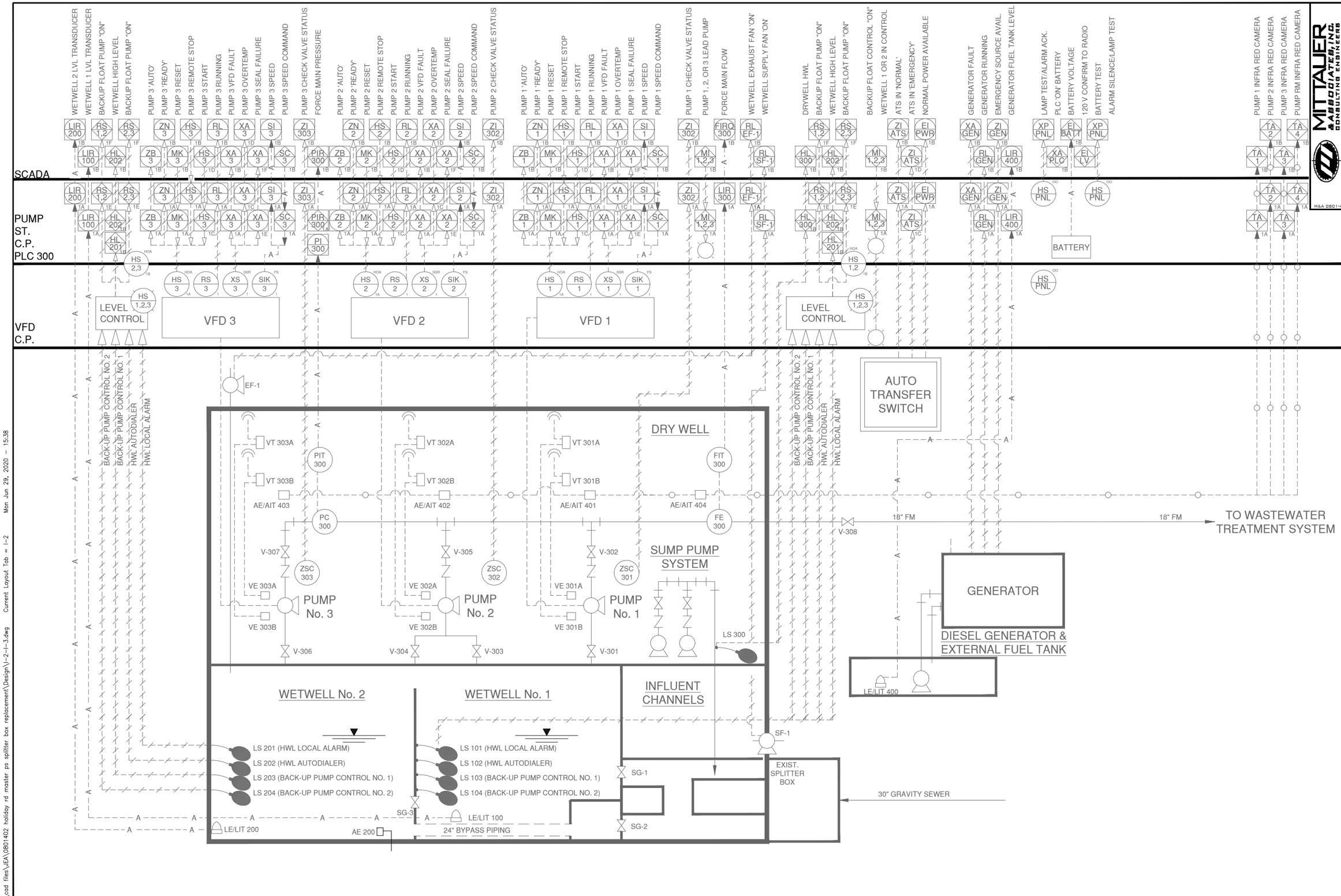

MITTAUER & ASSOCIATES, INC. CONSULTING ENGINEERS
580-1 WELLS ROAD, ORANGE PARK, FLORIDA 32073
TEL (904) 278-0030 FAX (904) 278-0840 FLORIDA LICENSE CA-6569
M&A 0801-40-2

NO.	BY	DATE	REVISIONS
6.	X	X	X
5.	X	X	X
4.	X	X	X
3.	X	X	X
2.	X	X	X
1.	X	X	X

DESIGN ENGINEER
JASON R. SHEPLER, P.E.
FLORIDA REGISTRATION NO. 58760

DESIGNER: JRS
DRAWN BY: JSA
DATE: MAY 2020
CHECKED BY: MPT
DATE: MAY 2020

JEA Building Community

HOLIDAY ROAD MASTER PUMP STATION
SPLITTER BOX REPLACEMENT
EXISTING P&ID DIAGRAM

PROJ. NO. 8006211
DATE: MAY 2020
SCALE: NONE

NO. SHEETS 35
SHEET NO. 30
DRAWING NO. I-2

M:\cad files\JEA\0801402 holiday rd master ps splitter box replacement\Design\I-2-I-3.dwg Current Layout Tab = I-2 Mon Jun 29, 2020 - 15:38

Xrefs Attached=

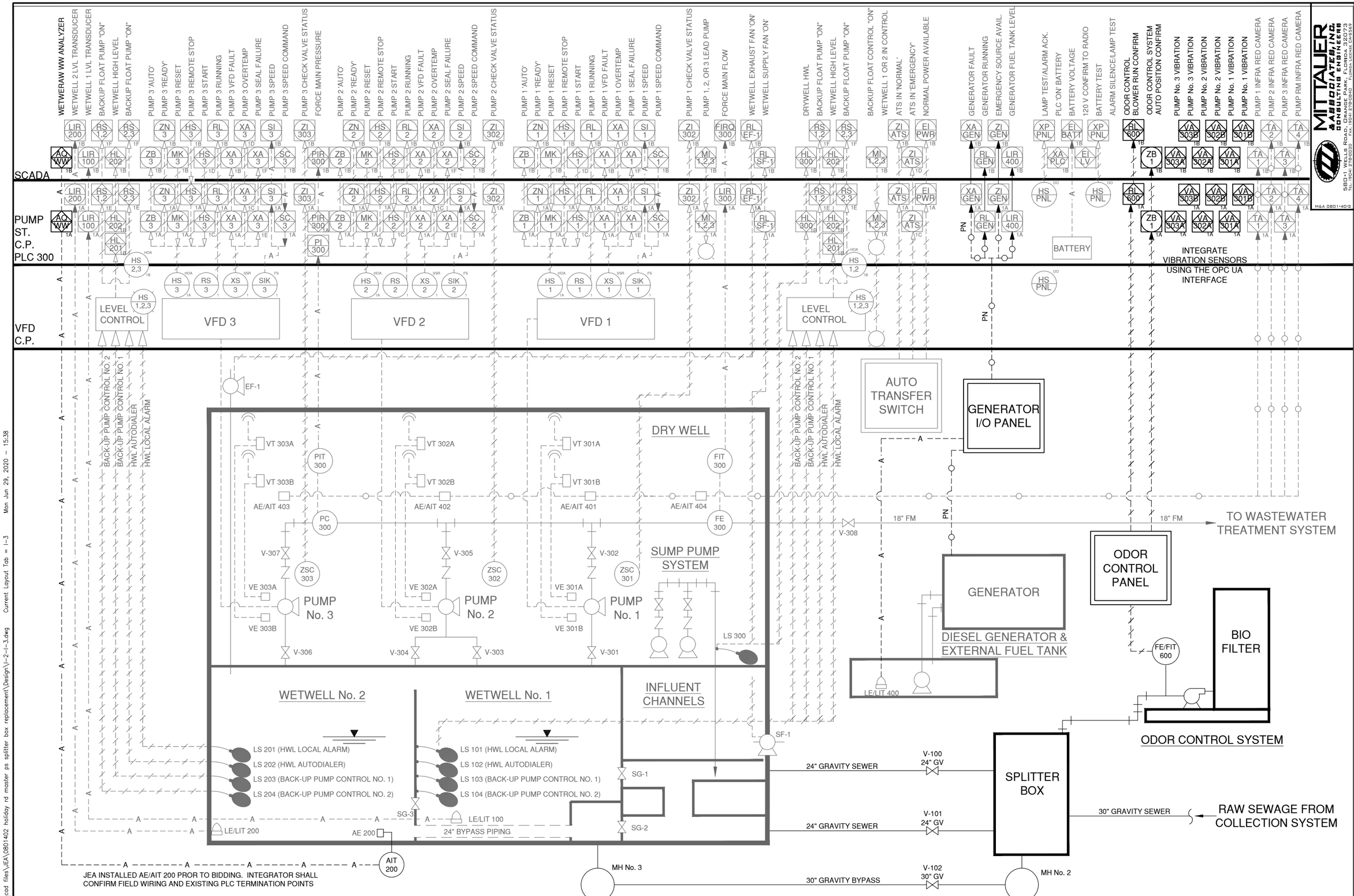

MITTAUER & ASSOCIATES, INC. CONSULTING ENGINEERS
580-1 WELLS ROAD, ORANGE PARK, FLORIDA 32073
TEL: (904) 278-0820 FAX: (904) 278-0823 EB#3 License #: C-245-369

M&A 0801-40-2

NO.	BY	DATE	REVISIONS
6	X	X	X
5	X	X	X
4	X	X	X
3	X	X	X
2	X	X	X
1	X	X	X

DESIGN ENGINEER
JASON R. SHEPLER, P.E.
FLORIDA REGISTRATION NO. 58760

DESIGNED: JRS
DRAWN BY: JRA
DATE: MAY 2020
CHECKED BY: MPT
DATE: MAY 2020

JEA Building Community sm

HOLIDAY ROAD MASTER PUMP STATION
SPLITTER BOX REPLACEMENT
P&ID DIAGRAM MODIFICATIONS

PROJ. NO. 8006211
DATE: MAY 2020
SCALE: NONE

NO. SHEETS 31
SHEET NO. 31
DRAWING NO. I-3

M:\cad files\JEA\0801402 holiday rd master ps splitter box replacement\Design\I-2-I-3.dwg Current Layout Tab = I-3 Mon Jun 29, 2020 - 15:38

Xrefs Attached=

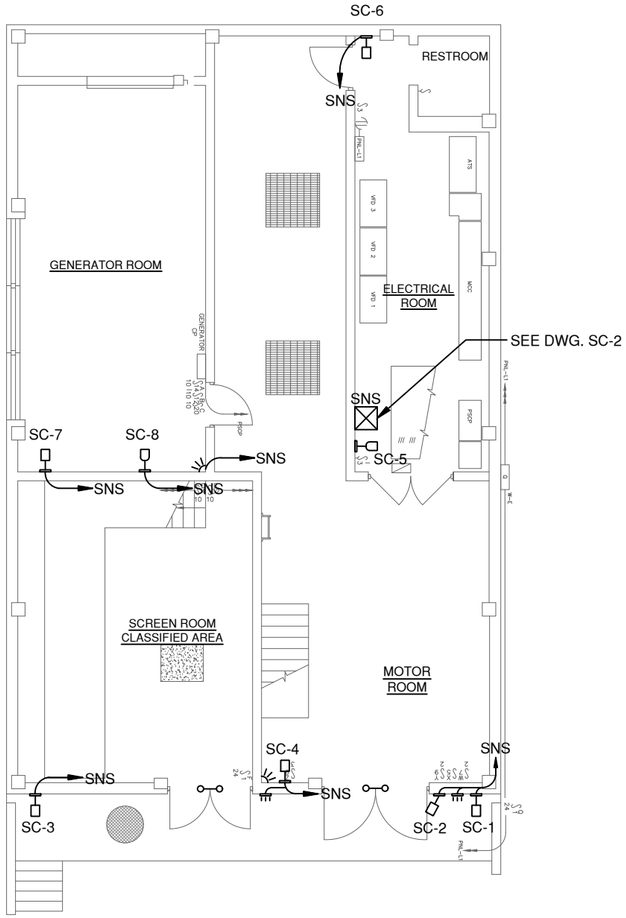

TOP FLOOR SECURITY PLAN
3/16" = 1'-0"

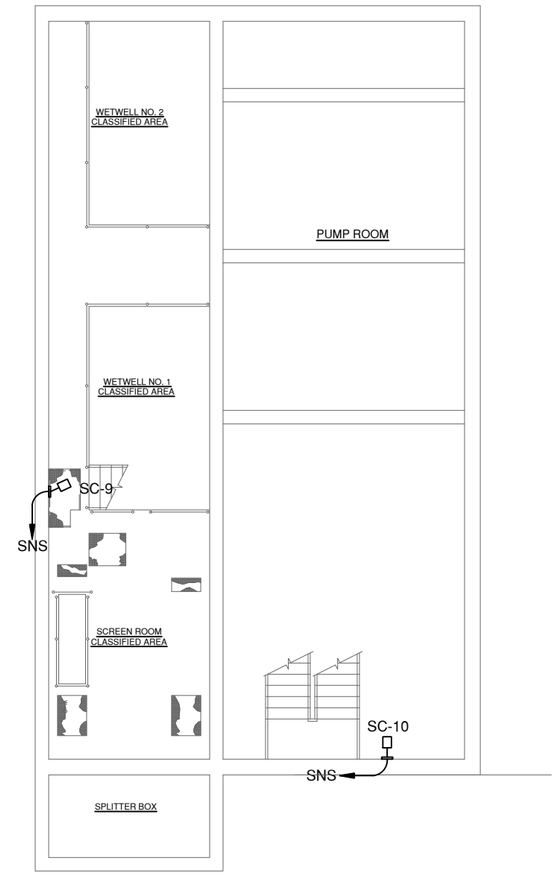

INTERMEDIATE FLOOR SECURITY PLAN
3/16" = 1'-0"

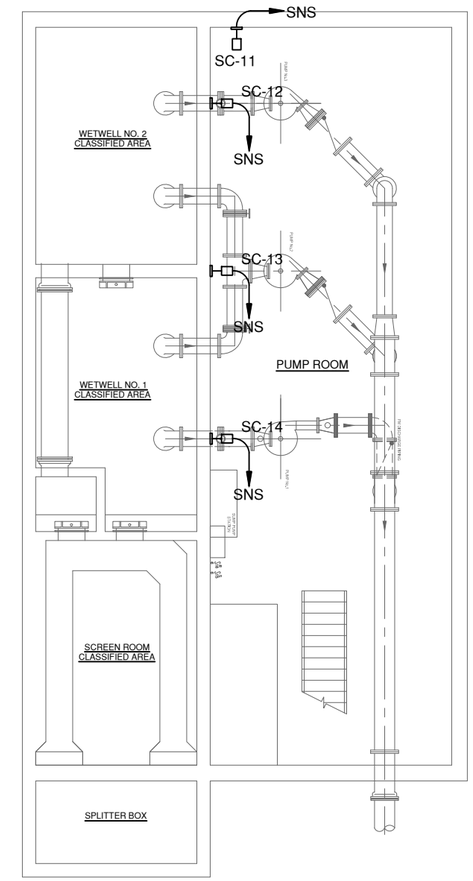

BOTTOM FLOOR SECURITY PLAN
3/16" = 1'-0"

LEGEND

- SECURITY CAMERA (BULLET)
- SECURITY CAMERA (PT2/IP)
- MOTION DETECTOR
- KEYPAD
- SECURITY NETWORK/SERVER (SNS)
- ANTENNA
- HOMERUN CONDUIT
- DOOR SENSOR

FOR INFORMATIONAL PURPOSES ONLY

MITTAUER & ASSOCIATES, INC.
CONSULTING ENGINEERS
580-1 WELLS ROAD, ORANGE PARK, FLORIDA 32073
TEL: (904) 278-0030 FAX: (904) 278-0840 FLORIDA LICENSE CA-6569
M&A 0801-40-2

NO.	BY	DATE	REVISIONS
6.	X	X	X
5.	X	X	X
4.	X	X	X
3.	X	X	X
2.	X	X	X
1.	X	X	X

DESIGN ENGINEER
JASON R. SHEPLER, P.E.
FLORIDA REGISTRATION NO.
58760

DESIGNER: JRS
DRAWN BY: JSA
DATE: MAY 2020
CHECKED BY: MPT
DATE: MAY 2020

JEA Building Community

HOLIDAY ROAD MASTER PUMP STATION
SPLITTER BOX REPLACEMENT
SECURITY FLOOR PLAN

PROJ. NO. 8006211
DATE: MAY 2020
SCALE: AS SHOWN

NO. SHEETS 35
SHEET NO. 33
DRAWING NO. SC-1

M:\cad files\JEA\0801402 holiday rd master ps splitter box replacement\Design\SC-1.dwg Current Layout Tab = SC-1 Mon Jun 29, 2020 - 15:38

Xrefs Attached=

FOR INFORMATIONAL PURPOSES ONLY

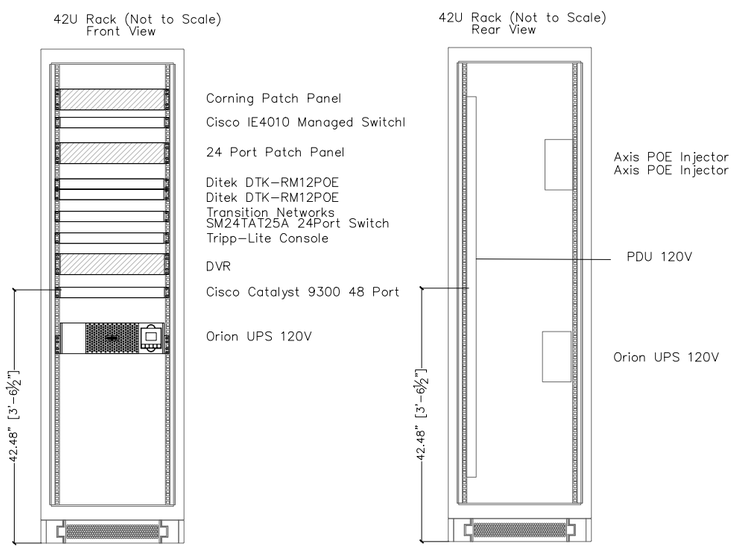

JEA HOLIDAY RD SECURITY NETWORK SYSTEM (SNS) RACK

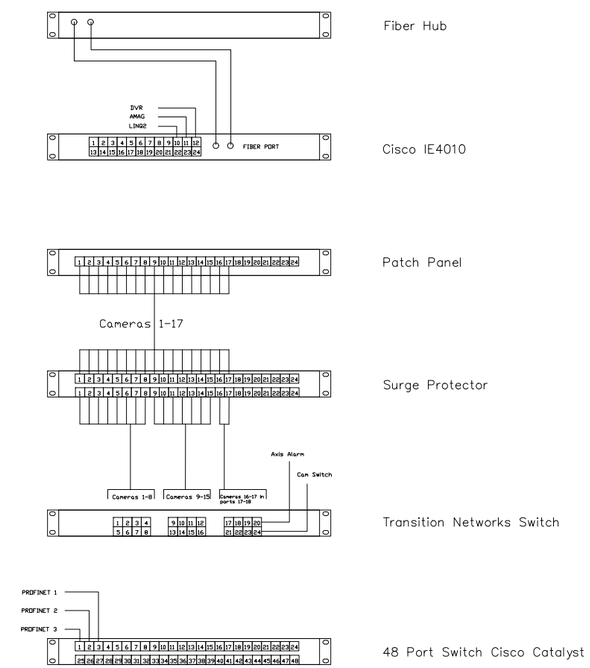

JEA HOLIDAY RD SNS CABLES

MITTAUER & ASSOCIATES, INC.
CONSULTING ENGINEERS
580-1 WELLS ROAD, ORANGE PARK, FLORIDA 32073
TEL: (904) 278-0030 FAX: (904) 278-0840 FLORIDA LICENSE CA-6569
M&A 0801-40-2

NO.	BY	DATE	REVISIONS
6.	X	X	X
5.	X	X	X
4.	X	X	X
3.	X	X	X
2.	X	X	X
1.	X	X	X

DESIGN ENGINEER
JASON R. SHEPLER, P.E.
FLORIDA REGISTRATION NO.
58760

DESIGNER: JRS
DRAWN BY: JSA
DATE: MAY 2020
CHECKED BY: MPT
DATE: MAY 2020

JEA Building Community

HOLIDAY ROAD MASTER PUMP STATION
SPLITTER BOX REPLACEMENT
SECURITY NETWORK RACK

PROJ. NO. 8006211
DATE: MAY 2020
SCALE: AS SHOWN

NO. SHEETS 35
SHEET NO. 34
DRAWING NO. SC-2

M:\cad files\JEA\0801402 holiday rd master ps splitter box replacement\Design\SC-2.dwg Current Layout Tab = SC-2 Mon Jun 29, 2020 - 15:38

Xrefs Attached=

EROSION AND SEDIMENT CONTROL NOTES

1. THE CONTRACTOR IS RESPONSIBLE FOR REMOVING SILT FROM SITE IF NOT REUSABLE ON-SITE AND ASSURING PLAN ALIGNMENT AND GRADE IN ALL DITCHES AND SWALES AT COMPLETION OF CONSTRUCTION.
2. THE SITE CONTRACTOR IS RESPONSIBLE FOR REMOVING THE TEMPORARY EROSION AND SEDIMENT CONTROL DEVICES AFTER COMPLETION OF CONSTRUCTION AND ONLY WHEN AREAS HAVE BEEN STABILIZED.
3. ADDITIONAL PROTECTION – ON-SITE PROTECTION IN ADDITION TO THAT SHOWN ON THESE PLANS MUST BE PROVIDED THAT WILL NOT PERMIT SILT TO LEAVE THE PROJECT CONFINES DUE TO UNSEEN CONDITIONS OR ACCIDENTS.
4. CONTRACTOR SHALL INSURE THAT ALL DRAINAGE STRUCTURES, PIPES, ETC. ARE CLEANED OUT AND WORKING PROPERLY AT TIME OF ACCEPTANCE.
5. WIRE MESH SHALL BE LAID OVER EACH DROP INLET SO THAT THE WIRE EXTENDS A MINIMUM OF 1 FOOT BEYOND EACH SIDE OF THE INLET STRUCTURE. HARDWARE CLOTH OR COMPARABLE WIRE MESH WITH 1/2-INCH OPENINGS SHALL BE USED. IF MORE THAN ONE STRIP OF MESH IS NECESSARY, THE STRIPS SHALL BE OVERLAPPED.
6. FDOT NO. 1 COARSE AGGREGATE SHALL BE PLACED OVER THE WIRE MESH AS INDICATED IN D-903. THE DEPTH OF STONE SHALL BE AT LEAST 12 INCHES OVER THE ENTIRE INLET OPENING. THE STONE SHALL EXTEND BEYOND THE INLET OPENING AT LEAST 18 INCHES ON ALL SIDES.
7. IF THE STONE FILTER BECOMES CLOGGED WITH SEDIMENT SO THAT IT NO LONGER ADEQUATELY PERFORMS ITS FUNCTION, THE STONES MUST BE PULLED AWAY FROM THE INLET, CLEANED AND REPLACED.
8. BALES SHALL BE EITHER WIRE-BOUND OR STRING-TIED WITH THE BINDINGS ORIENTED AROUND THE SIDES RATHER THAN OVER AND UNDER THE BALES.
9. BALES SHALL BE PLACED LENGTHWISE IN A SINGLE ROW SURROUNDING THE INLET, WITH THE ENDS OF ADJACENT BALES PRESSED TOGETHER.
10. THE FILTER BARRIER SHALL BE ENTRENCHED AND BACKFILLED. A TRENCH SHALL BE EXCAVATED TO A MINIMUM DEPTH OF 8 INCHES. AFTER THE BALES ARE STAKED, THE EXCAVATED SOIL SHALL BE BACKFILLED AND COMPACTED AGAINST THE FILTER BARRIER.
11. EACH BALE SHALL BE SECURELY ANCHORED AND HELD IN PLACE BY AT LEAST TWO STAKES OR REBARS DRIVEN THROUGH THE BALE.
12. LOOSE STRAW SHOULD BE WEDGED BETWEEN BALES TO PREVENT WATER FROM ENTERING BETWEEN BALES.
13. STRAW BALE BARRIERS SHALL BE INSPECTED IMMEDIATELY AFTER EACH RAINFALL AND AT LEAST DAILY DURING PROLONGED RAINFALL.
14. CLOSE ATTENTION SHALL BE PAID TO THE REPAIR OF DAMAGED BALES, END RUNS AND UNDERCUTTING BENEATH BALES.
15. NECESSARY REPAIRS TO BARRIERS OR REPLACEMENT OF BALES SHALL BE ACCOMPLISHED PROMPTLY.
16. ANY SEDIMENT DEPOSITS REMAINING IN PLACE AFTER THE STRAW BALE BARRIER IS NO LONGER REQUIRED SHALL BE DRESSED TO CONFORM TO THE EXISTING GRADE, PREPARED AND SEEDED.
17. SILT FENCES AND FILTER BARRIERS SHALL BE INSPECTED IMMEDIATELY AFTER EACH RAINFALL AND AT LEAST DAILY DURING PROLONGED RAINFALL. ANY REQUIRED REPAIRS SHALL BE MADE IMMEDIATELY.
18. SHOULD THE FABRIC ON A SILT FENCE OR FILTER BARRIER DECOMPOSE OR BECOME INEFFECTIVE PRIOR TO THE END OF THE EXPECTED USABLE LIFE AND THE BARRIER STILL BE NECESSARY, THE FABRIC SHALL BE REPLACED PROMPTLY.
19. SEDIMENT DEPOSITS SHOULD BE REMOVED AFTER EACH STORM EVENT. THEY MUST BE REMOVED WHEN DEPOSITS REACH APPROXIMATELY ONE-THIRD THE HEIGHT OF THE BARRIER.
20. ANY SEDIMENT DEPOSITS REMAINING IN PLACE AFTER THE SILT FENCE OR FILTER BARRIER IS NO LONGER REQUIRED SHALL BE DRESSED TO CONFORM WITH THE EXISTING GRADE, PREPARED AND SEEDED.
21. THE STRUCTURE SHALL BE INSPECTED AFTER EACH RAIN AND REPAIRS MADE AS NEEDED.
22. SEDIMENT SHALL BE REMOVED AND THE TRAP RESTORED TO ITS ORIGINAL DIMENSIONS WHEN THE SEDIMENT HAS ACCUMULATED TO 1/3 THE DESIGN DEPTH OF THE TRAP. REMOVED SEDIMENT SHALL BE DEPOSITED IN A SUITABLE AREA AND IN SUCH A MANNER THAT IT WILL NOT ERODE.
23. THE CONTRACTOR IS RESPONSIBLE FOR FOLLOWING THE BEST EROSION AND SEDIMENT CONTROL PRACTICES AS OUTLINED IN THE PLANS, SPECIFICATIONS AND ST. JOHNS RIVER WATER MANAGEMENT DISTRICT SPECIFICATIONS AND CRITERIA.
24. FOR ADDITIONAL INFORMATION ON SEDIMENT AND EROSION CONTROL REFER TO "THE FLORIDA DEVELOPMENT MANUAL – A GUIDE TO SOUND LAND AND WATER MANAGEMENT" FROM THE STATE OF FLORIDA DEPARTMENT OF ENVIRONMENTAL REGULATION (F.D.E.R.) CHAPTER 6.
25. EROSION AND SEDIMENT CONTROL BARRIERS SHALL BE PLACED ADJACENT TO ALL WETLAND AREAS WHERE THERE IS POTENTIAL FOR DOWNSTREAM WATER QUALITY DEGRADATION.
26. ALL DISTURBED AREAS SHALL BE GRASSED, FERTILIZED, MULCHED AND MAINTAINED UNTIL A PERMANENT VEGETATIVE COVER IS ESTABLISHED.
27. SOD SHALL BE PLACED IN AREAS WHICH MAY REQUIRE IMMEDIATE EROSION PROTECTION TO ENSURE WATER QUALITY STANDARDS ARE MAINTAINED.
28. ANY DISCHARGE FROM DEWATERING ACTIVITY SHALL BE FILTERED AND CONVEYED TO THE OUTFALL IN A MANNER WHICH PREVENTS EROSION AND TRANSPORTATION OF SUSPENDED SOLIDS TO THE RECEIVING OUTFALL.
29. DEWATERING PUMPS SHALL NOT EXCEED THE CAPACITY OF THAT WHICH REQUIRES A CONSUMPTIVE USE PERMIT FROM THE ST. JOHNS RIVER WATER MANAGEMENT DISTRICT.
30. ALL DISTURBED AREAS TO BE STABILIZED THROUGH COMPACTION, SILT SCREENS, HAY BALES, AND GRASSING. ALL FILL SLOPES 3:1 OR STEEPER TO RECEIVE STAKED SOLID SOD.
31. ALL DEWATERING, EROSION, AND SEDIMENT CONTROL TO REMAIN IN PLACE AFTER COMPLETION OF CONSTRUCTION AND REMOVED ONLY WHEN AREAS HAVE STABILIZED.
32. THIS PLAN INDICATES THE MINIMUM EROSION AND SEDIMENT MEASURES REQUIRED FOR THIS PROJECT. THE CONTRACTOR IS RESPONSIBLE FOR MEETING ALL APPLICABLE RULES, REGULATIONS AND WATER QUALITY GUIDELINES AND MAY NEED TO INSTALL ADDITIONAL CONTROLS.
33. THE CONTRACTOR SHALL BE REQUIRED TO RESPOND TO ALL GOVERNING AGENCY INQUIRIES, RELATIVE TO COMPLIANCE OF THIS PROJECT FOR EROSION AND SEDIMENTATION CONTROL. THE COST OF THIS COMPLIANCE SHALL BE PART OF THE CONTRACT.

WHERE FDOT SPECS AND INDEX ARE REFERENCED, PLEASE REFER TO FDOT ROADWAY & TRAFFIC DESIGN STANDARDS, AND FDOT STANDARD SPECIFICATIONS FOR ROAD & BRIDGE CONSTRUCTION.

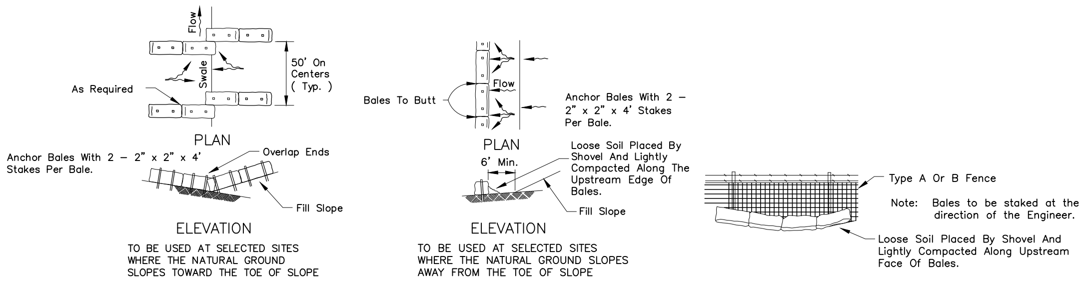

BARRIERS FOR FILL SLOPES

BALES BACKED BY FENCE

HAY BALE LOCATION

(D-901)
N.T.S.

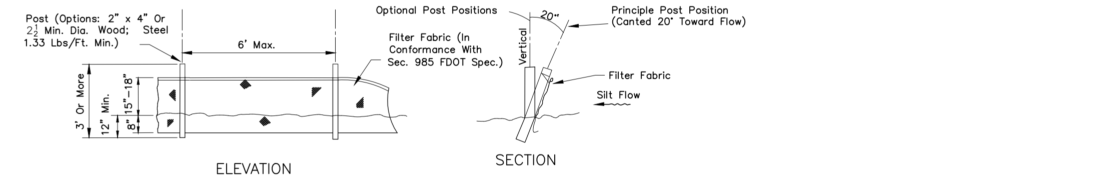

TYPE III SILT FENCE

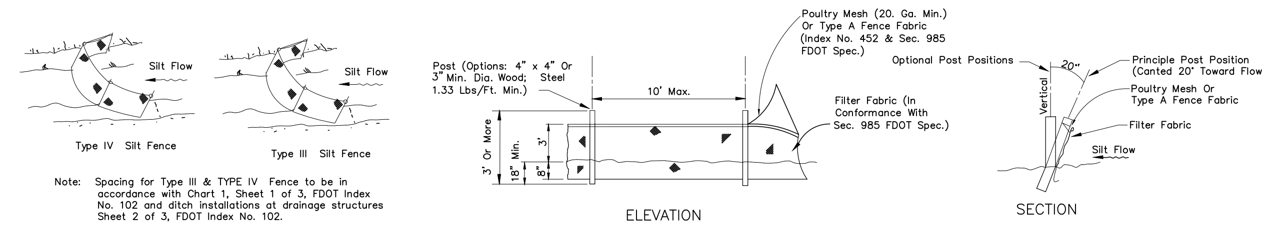

Note: Silt Fence to be paid for under the contract lump sum price for Erosion and Sediment Control.

TYPE IV SILT FENCE

SILT FENCE APPLICATIONS

SILT FENCE TYPE III & IV

(D-908) SEE NOTE 17-20
N.T.S.

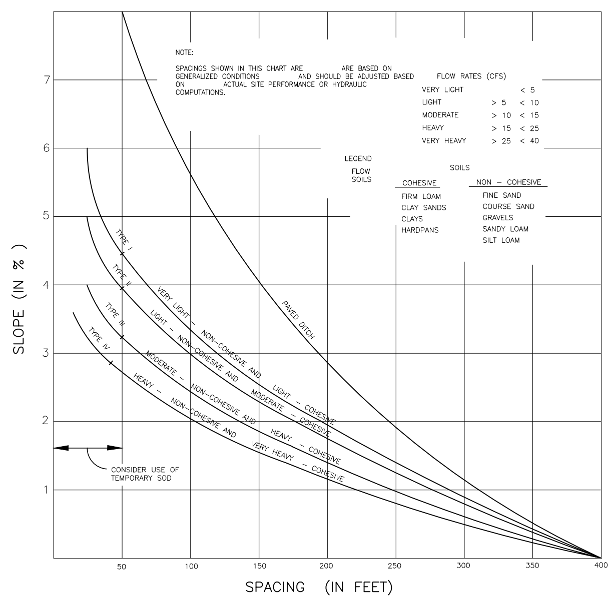

CHART I
RECOMMENDED SPACING FOR TYPE I AND TYPE II HAY BALE BARRIERS, AND TYPE III AND TYPE IV SILT FENCES AND PAVED DITCH HAY BALE BARRIERS

SPACING RECOMMENDATION FOR SILT FENCES & HAY BALES

(D-906)
N.T.S.

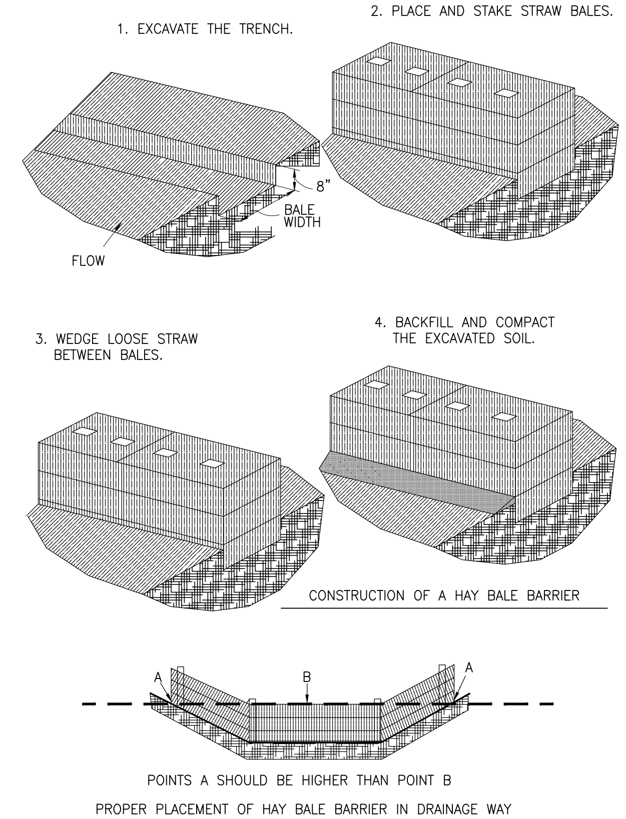

HAY BALE BARRIER CONSTRUCTION DETAILS

(D-913)
N.T.S.

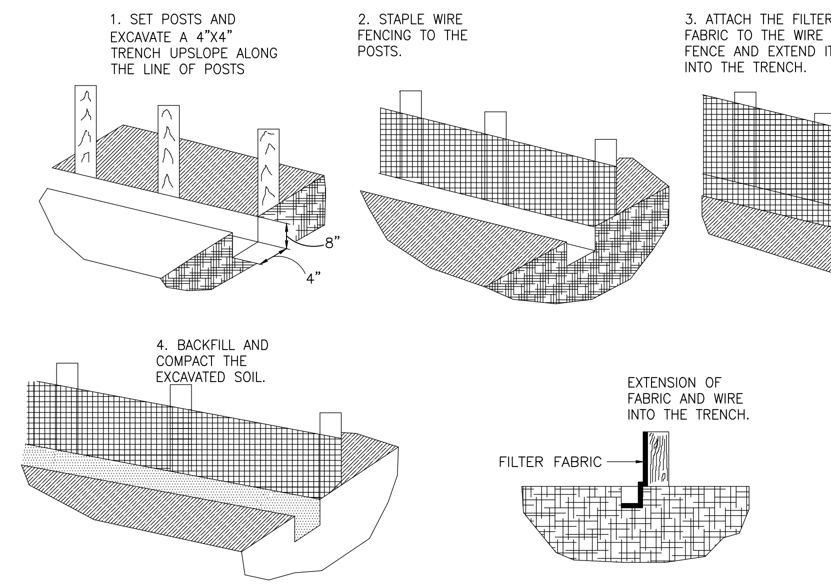

CONSTRUCTION DETAILS FOR SILT FENCES

(D-909)
N.T.S.

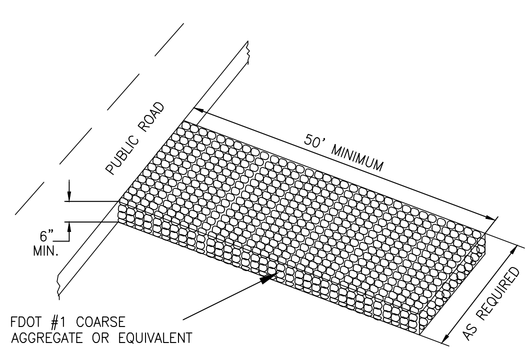

STABILIZED CONSTRUCTION ENTRANCE

N.T.S.

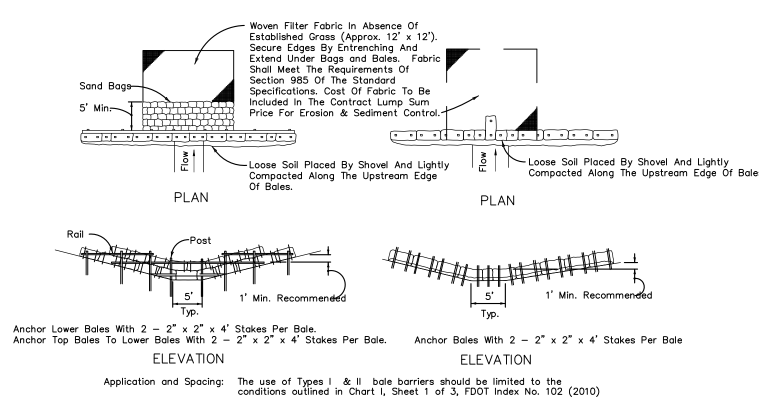

BARRIER FOR UNPAVED DITCHES

HAY BALE BARRIERS TYPE I & II

(D-912) SEE NOTE 8-16
N.T.S.

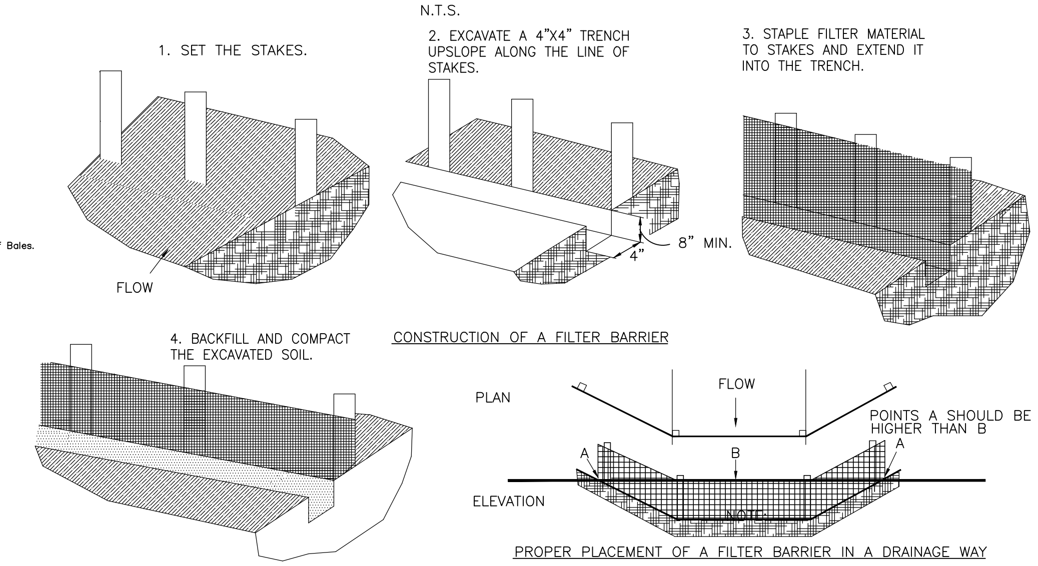

FILTER BARRIER CONSTRUCTION DETAIL

(D-910)
N.T.S.

MITTAUER & ASSOCIATES, INC.
CONSULTING ENGINEERS
580-1 WELLS ROAD, ORANGE PARK, FLORIDA 32073
TEL (904) 278-0030 FAX (904) 278-0840 Florida License CA-6569
M&A 0801-40-2

NO.	BY	DATE	REVISIONS
6.	X	X	X
5.	X	X	X
4.	X	X	X
3.	X	X	X
2.	X	X	X
1.	X	X	X

DESIGN ENGINEER
JASON R. SHEPLER, P.E.
FLORIDA REGISTRATION NO. 58760

DESIGNER:	JRS	DRAWN BY:	YPJ/SA
DATE:	MAY 2020	CHECKED BY:	MPT
DATE:	MAY 2020		

JEA Building Community

HOLIDAY ROAD MASTER PUMP STATION
SPLITTER BOX REPLACEMENT
STORM WATER POLLUTION PREVENTION PLAN

PROJ. NO.	SWPPP-1
DATE:	MAY 2020
SCALE:	NONE
NO. SHEETS	35
SHEET NO.	35
DRAWING NO.	SWPPP-1

M:\cad files\JEA\0801402 holiday rd master ps splitter box replacement\Design\SWPPP-1.dwg Current Layout Tab = SWPPP-1 Mon Jun 29, 2020 - 15:38
Xrefs Attached=