ADDENDUM NO. 3
(November 19, 2020)

HOLIDAY ROAD MASTER PUMP STATION SPLITTER BOX REPLACEMENT
JEA
MITTAUER & ASSOCIATES, INC. PROJECT NO. 0801-40-2

DRAWINGS:

DRAWING A-2 - ROOF MODIFICATIONS PLAN:

Replace DRAWING A-2 with the enclosed amended drawing. JEA desires to replace the roof drains and roof drain piping as shown herein.

END OF ADDENDUM NO. 3

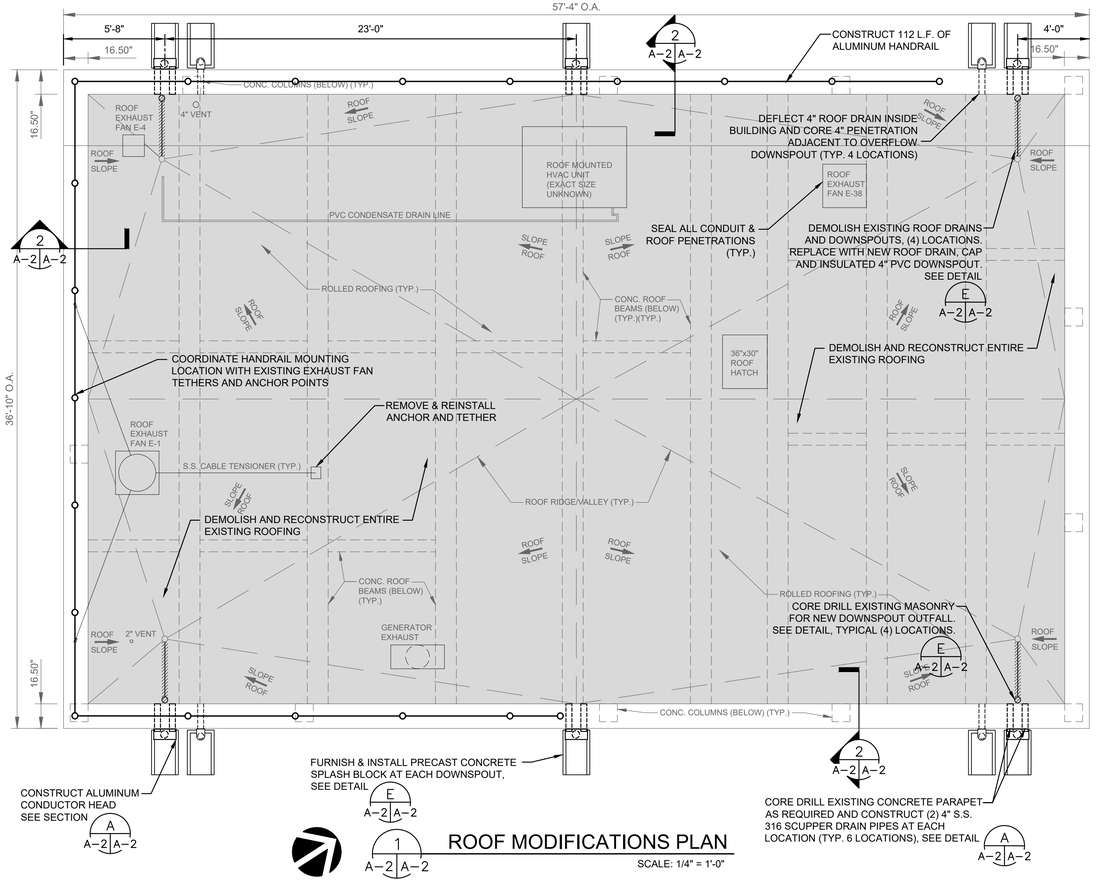

1 A-2 A-2 ROOF MODIFICATIONS PLAN

SCALE: 1/4" = 1'-0"

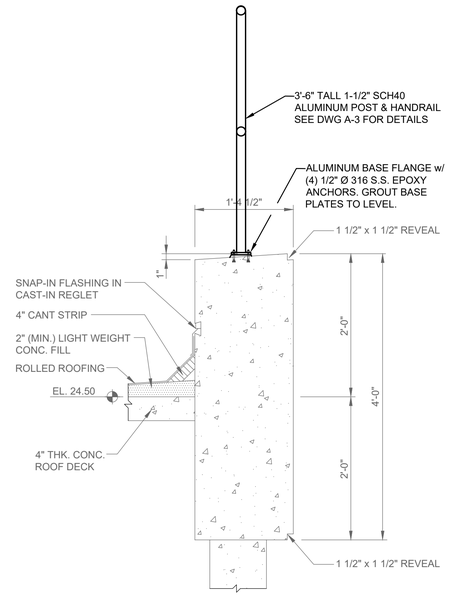

2 A-2 A-2 SECTION

SCALE: 1" = 1'-0"

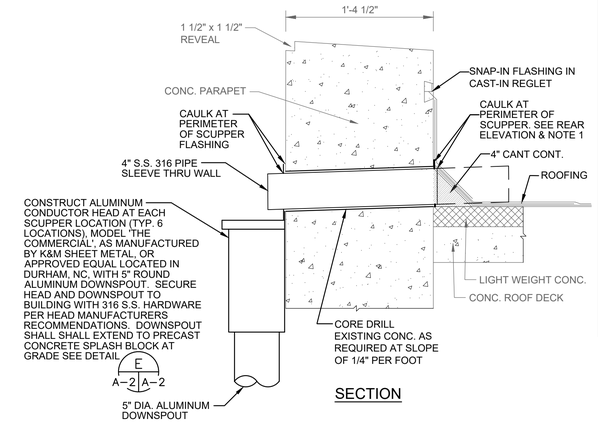

SECTION

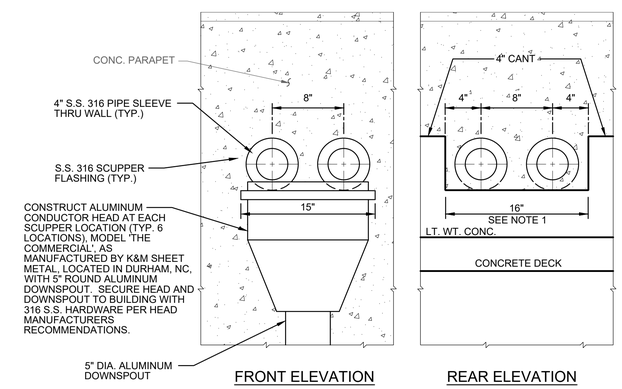

FRONT ELEVATION

REAR ELEVATION

A A-2 A-2 ROOF SCUPPER - DETAIL

SCALE: 1 1/2" = 1'-0"

NOTES:
1. EXTEND OVERFLOW PIPING THRU CANT AND SEAL, OR PROVIDE CANT TRANSITION AS DEPICTED IN REAR ELEVATION.

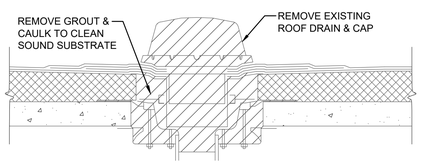

ROOF DRAIN - DEMO DETAIL

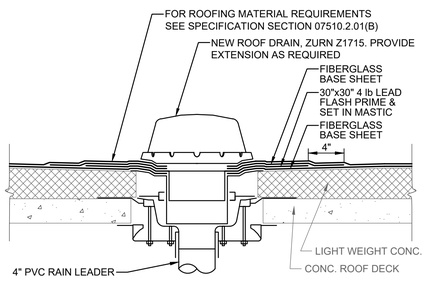

B A-2 A-2 ROOF DRAIN - DETAIL

SCALE: 1 1/2" = 1'-0"

NOTE:
PROVIDE ALL SUPPORTS, ADAPTERS & CONNECTIONS NECESSARY FOR SATISFACTORY ROOF DRAIN ASSEMBLY.

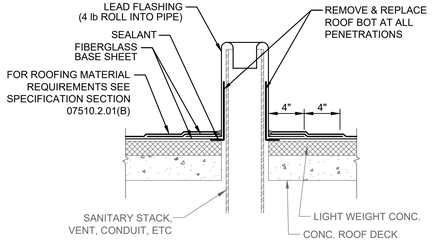

C A-2 A-2 ROOF PENETRATION - DETAIL

SCALE: 1 1/2" = 1'-0"

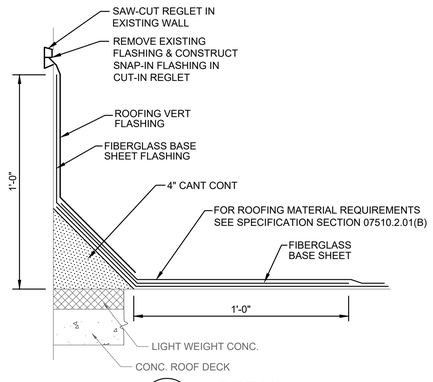

D A-2 A-2 DETAIL

NTS

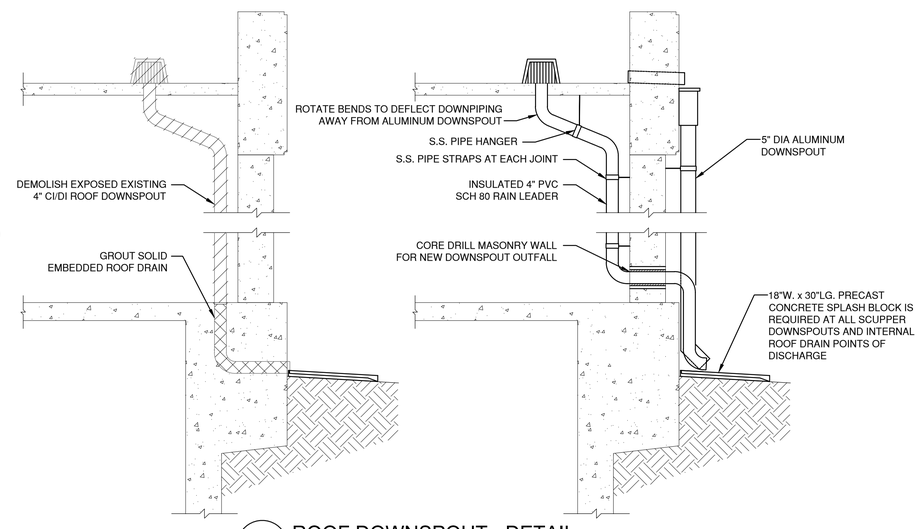

E A-2 A-2 ROOF DOWNSPOUT - DETAIL

NTS

MITTAUER & ASSOCIATES, INC.
CONSULTING ENGINEERS
580-1 WELLS ROAD, ORANGE PARK, FLORIDA 32073
TEL: (904) 276-0050 FAX: (904) 276-0840 FLORIDA LICENSE CA-0569

M&A 0801-40-2

NO.	BY	DATE	REVISIONS
6.	X	X	X
5.	X	X	X
4.	X	X	X
3.	X	X	X
2.	X	X	X
1.	MPT	11/19/20	ADDENDUM No. 3

DESIGN ENGINEER
JASON R. SHEPLER, P.E.
FLORIDA REGISTRATION NO. 59760

DESIGNER: JRS
DRAWN BY: JRS-SA
DATE: JUNE 2020
CHECKED BY: MPT
DATE: JUNE 2020

JEA Building Community

HOLIDAY ROAD MASTER PUMP STATION
SPLITTER BOX REPLACEMENT
ROOF MODIFICATIONS PLAN

PROJ. NO. 8006211
DATE: JUNE 2020
SCALE: AS SHOWN

NO. SHEETS 35
SHEET NO. 19
DRAWING NO. A-2

1

\\ma-server\Common\CAD Files\JEA\0801402 Holiday Rd Master PS Splitter Box Replacement\Design\A2.dwg Current Layout Tab = A2 Thu Nov 19, 2020 - 08:44
Xrefs Attached=