(SO-4)

R. ALEMAN
& Associates, Inc.
CONSULTING ENGINEERS
6196 Lake Gray Blvd., Suite 101, Jacksonville, FL 32244

VACUUM TEST HOLE REPORT

Test Hole No.: 1

FRA Job No.: 2984

PROJECT NAME: JEA-Nassau RW Main(Radio Ave to Harts Rd) | **Subcontract No.:** | **WORK ORDER No.:** 07

LOCATE REQUESTED BY: R.E. Holland & Associates

PAVEMENT TYPE:
ASPHALT CONCRETE ASPHALT OVER CONCRETE GRAVEL BRICKS SIDEWALK (N/A)

REQUESTED LOCATE: (GAS) STORM SAN. COMMUNICATION FORCE MAIN CATV WATER TEL. ELECTRIC RAW WATER UNKNOWN RECLAIMED WATER N/A FIBER OPTIC CABLE

PAVEMENT CONDITION: GOOD FAIR POOR (N/A)

LOCATED UTILITY: (GAS) STORM SAN. COMMUNICATION FORCE MAIN CATV WATER TEL. ELECTRIC RAW WATER UNKNOWN RECLAIMED WATER N/A FIBER OPTIC CABLE

SOIL CONDITIONS: HARD (SOFT) WET MOIST (DRY) SAND CLAY ROCK (DIRT) SOLID-ROCK

MATERIAL AS FOUND: D/I C/I STEEL (WRAP-STEEL) TILE PLASTIC TERRA COTTA ACP RCP CMP PVC UNK DB CABLE SMOOTH POUR ROUGH POUR OTHER

SHEET No.: 14

PROPOSED: New Utilities Roadway Mast Arm/Signal Pole Drainage

FORM BY: C.Reyes **ASSISTED BY:** P. A.

SIZE AS FOUND: 12" **SIZE EXPECTED:** 12"

NUMBER OF HOLES: 1 **Date:** 6-2-17 **TIME:**

UTILTIY CONDITION: (GOOD) FAIR POOR N/A

INSTALLED: PK HUB STEEL (PIN) CHIS "X" CHIS BOX

RIBBON INSTALLED: BLUE (YELLOW) RED GREEN N/A ORANGE WHITE PINK PURPLE

AT: (CROWN) EDGE OF UTILITY:

SURVEY PIN LOCATED BY: N/A

JOB MEASUREMENT TYPE: TENTHS METRIC INCHES

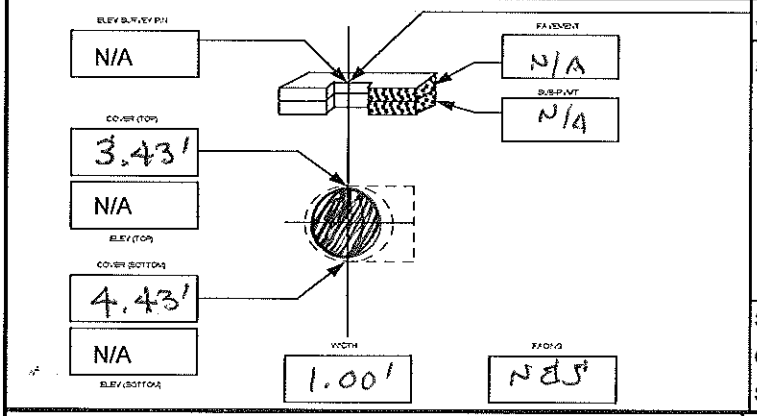

NOTES: Excavated to a depth of 3.43'

- found a 12" WISH G.M -High Pressure- (Teco GAS)

SURVEY INFORMATION

GIVEN ELEVATION

STATION (±) 275+36.60 OFFSET: 6.50' LT / (RT)

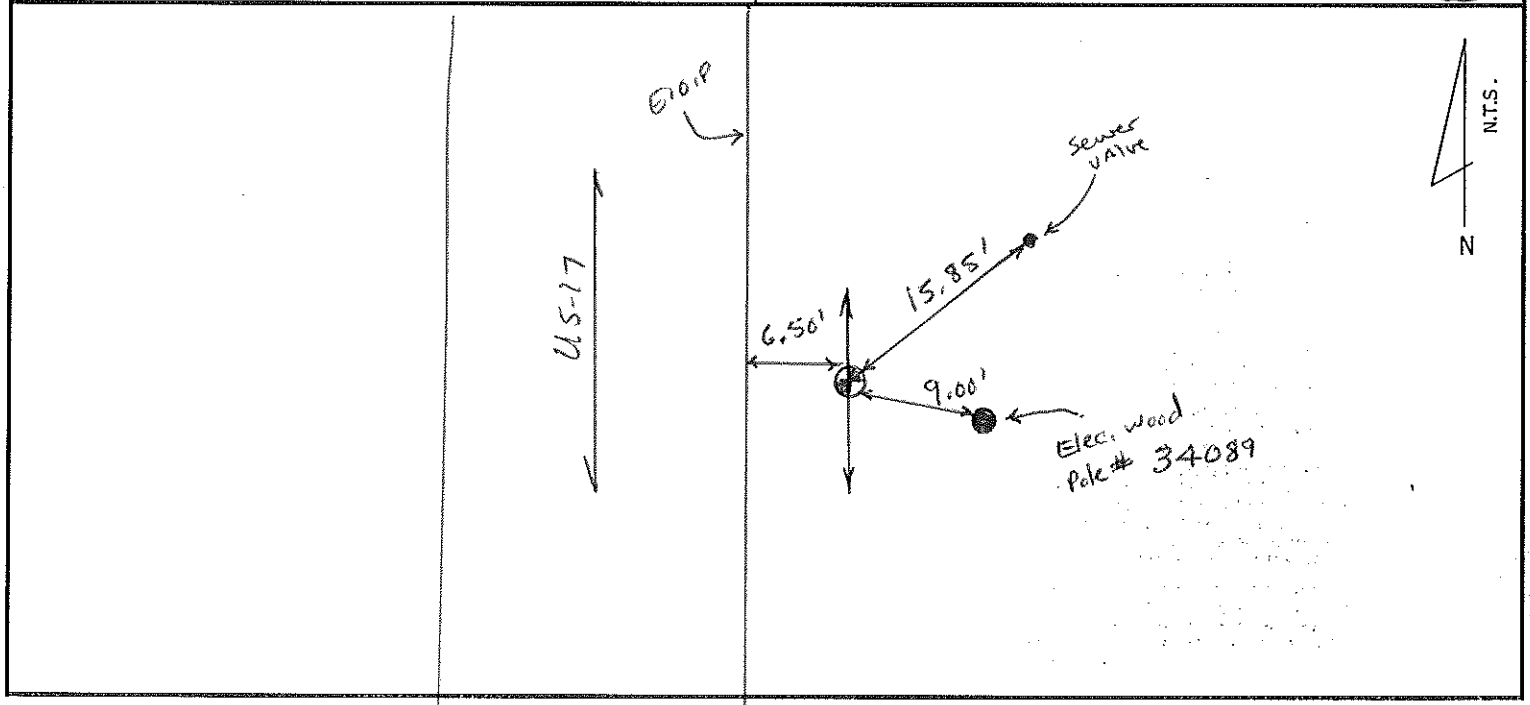

(SD-3)

R. ALEMAN
& Associates, Inc.
CONSULTING ENGINEERS
6196 Lake Gray Blvd., Suite 101, Jacksonville, FL 32244

VACUUM TEST HOLE REPORT

Test Hole No.: 2

FRA Job No.: 2984

PROJECT NAME: JEA-Nassau RW Main(Radio Ave to Harts Rd)

Subcontract No.: WORK ORDER No.: 07

LOCATE REQUESTED BY: R.E. Holland & Associates

REQUESTED LOCATE: (GAS) STORM SAN. COMMUNICATION FORCE MAIN CATV WATER TEL. ELECTRIC RAW WATER UNKNOWN RECLAIMED WATER N/A FIBER OPTIC CABLE

LOCATED UTILITY: (GAS) STORM SAN. COMMUNICATION FORCE MAIN CATV WATER TEL. ELECTRIC RAW WATER UNKNOWN RECLAIMED WATER N/A FIBER OPTIC CABLE

MATERIAL AS FOUND: D/I C/I STEEL (WRAP-STEEL) TILE PLASTIC TERRA COTTA ACP RCP CMP PVC UNK DB CABLE SMOOTH POUR ROUGH POUR OTHER

SIZE AS FOUND: 12" SIZE EXPECTED: 12"

UTILTIY CONDITION: (GOOD) FAIR POOR N/A

RIBBON INSTALLED: BLUE (YELLOW) RED GREEN N/A ORANGE WHITE PINK PURPLE

PAVEMENT TYPE: ASPHALT CONCRETE ASPHALT OVER CONCRETE GRAVEL BRICKS SIDEWALK (N/A)

PAVEMENT CONDITION: GOOD FAIR POOR (N/A)

SOIL CONDITIONS: HARD (SOFT) WET MOIST (DRY) SAND CLAY ROCK (DIRT) SOLID-ROCK

SHEET No.: 14

PROPOSED: New Utilities Roadway Mast Arm/Signal Pole Drainage

FORM BY: C.Reyes ASSISTED BY: P.A

NUMBER OF HOLES: 1 Date: 6-2-17 TIME: _____

INSTALLED: PK HUB STEEL (PIN) CHIS "X" CHIS BOX

AT: (CROWN) EDGE OF UTILITY:

SURVEY PIN LOCATED BY: N/A

JOB MEASUREMENT TYPE: TENTHS METRIC INCHES

NOTES: Excavated to a depth of 3.51'

- Found a 12" w/SH G.M. -High Pressure- (Teco GAS)

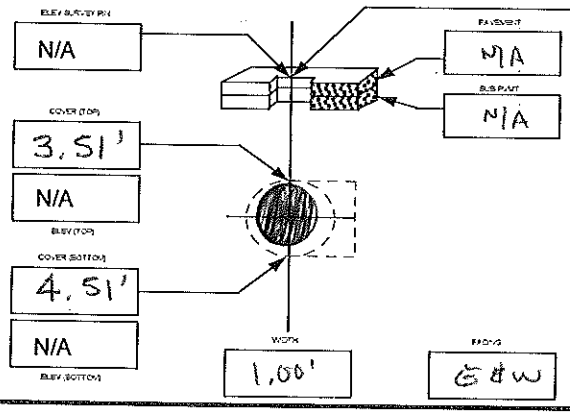

SURVEY INFORMATION

GIVEN ELEVATION

STATION (±) 271+55.00 OFFSET: 32.45' (LT) / RT

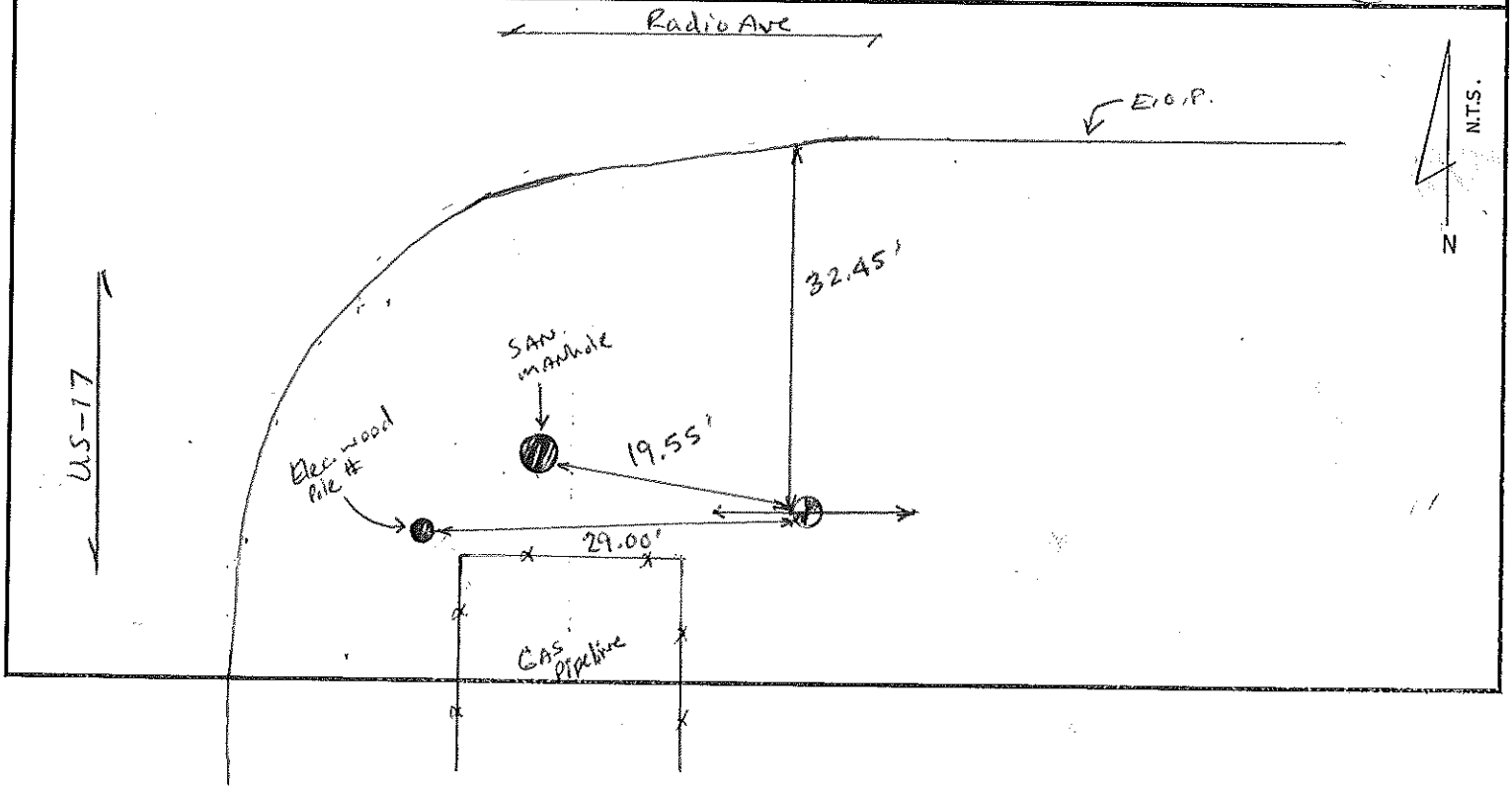

(SD-2)

R. ALEMAN
& Associates, Inc.
CONSULTING ENGINEERS
6199 Lake Gray Blvd., Suite 101, Jacksonville, FL 32244

VACUUM TEST HOLE REPORT

Test Hole No.: 3

FRA Job No.: 2984

PROJECT NAME: JEA-Nassau RW Main(Radio Ave to Harts Rd) | **Subcontract No.:** | **WORK ORDER No.:** 07

LOCATE REQUESTED BY: R.E. Holland & Associates

REQUESTED LOCATE: (GAS) STORM SAN. COMMUNICATION FORCE MAIN CATV WATER TEL. ELECTRIC RAW WATER UNKNOWN RECLAIMED WATER N/A FIBER OPTIC CABLE

LOCATED UTILITY: GAS STORM SAN. COMMUNICATION FORCE MAIN CATV WATER (TEL) ELECTRIC RAW WATER UNKNOWN RECLAIMED WATER N/A FIBER OPTIC CABLE

MATERIAL AS FOUND: D/I C/I STEEL WRAP-STEEL TILE PLASTIC TERRA COTTA ACP RCP CMP PVC UNK (D) CABLE SMOOTH POUR ROUGH POUR OTHER

SIZE AS FOUND: 2" **SIZE EXPECTED:** 8"

UTILTIY CONDITION: (GOOD) FAIR POOR N/A

RIBBON INSTALLED: BLUE YELLOW RED GREEN N/A (ORANGE) WHITE PINK PURPLE

PAVEMENT TYPE: ASPHALT CONCRETE ASPHALT OVER CONCRETE GRAVEL BRICKS SIDEWALK (N/A)

PAVEMENT CONDITION: GOOD FAIR POOR (N/A)

SOIL CONDITIONS: HARD (SOFT) WET MOIST (DRY) SAND CLAY ROCK (DIRT) SOLID-ROCK

SHEET No.: 14

PROPOSED: New Utilities Roadway Mast Arm/Signal Pole Drainage

FORM BY: C.Reyes **ASSISTED BY:** RA

NUMBER OF HOLES: 1 **Date:** 6-2-17 **TIME:**

INSTALLED: PK HUB STEEL (PIN) CHIS "X" CHIS BOX

AT: (CROWN) EDGE OF UTILITY:

SURVEY PIN LOCATED BY: N/A

JOB MEASUREMENT TYPE: TENTHS METRIC INCHES

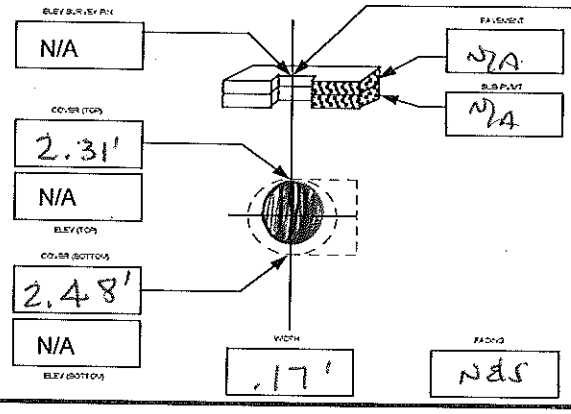

NOTES: Excavated to a depth of 10.00'

- Found a 2" D.B. CABLE TEL at a depth of 2.31'
- Test hole was done on locate mark by FR ALEMAN & ASSOC.
- Found C.M. IN TH# 4

SURVEY INFORMATION

GIVEN ELEVATION

STATION (±) 271+83.00 OFFSET: N/A LT / RT

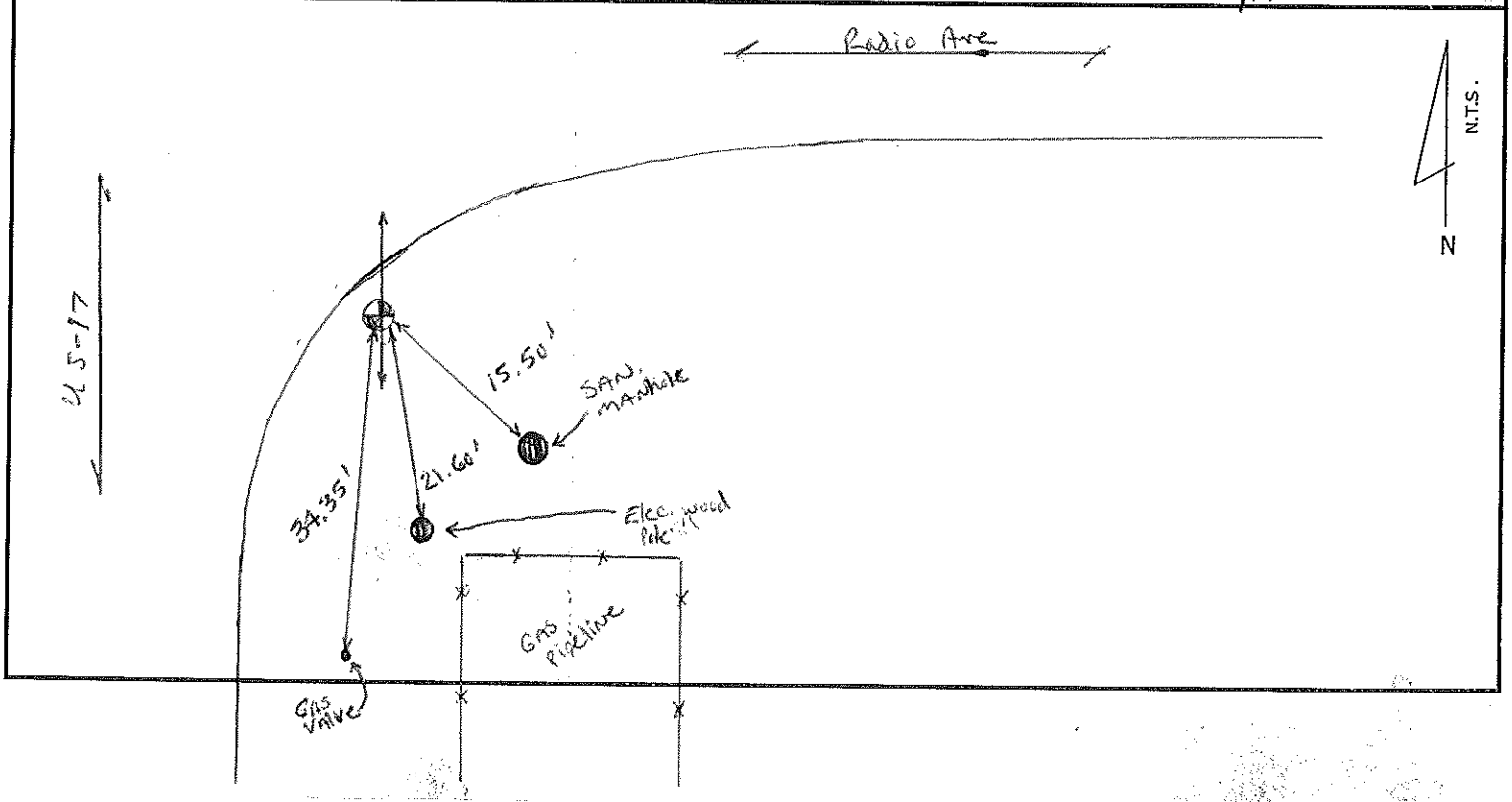

(50.2)

R. ALEMAN
& Associates, Inc.
CONSULTING ENGINEERS
6196 Lake Gray Blvd., Suite 101, Jacksonville, FL 32244

VACUUM TEST HOLE REPORT

Test Hole No.: 4

FRA Job No.: 2984

PROJECT NAME: JEA-Nassau RW Main(Radio Ave to Harts Rd) | **Subcontract No.:** | **WORK ORDER No.:** 07

LOCATE REQUESTED BY: R.E. Holland & Associates

PAVEMENT TYPE:
ASPHALT CONCRETE ASPHALT OVER CONCRETE
GRAVEL BRICKS SIDEWALK (N/A)

REQUESTED LOCATE: (GAS) STORM SAN. COMMUNICATION
FORCE MAIN CATV WATER TEL. ELECTRIC RAW WATER
UNKNOWN RECLAIMED WATER N/A FIBER OPTIC CABLE

PAVEMENT CONDITION: GOOD FAIR POOR (N/A)

LOCATED UTILITY: (GAS) STORM SAN. COMMUNICATION
FORCE MAIN CATV WATER TEL. ELECTRIC RAW WATER
UNKNOWN RECLAIMED WATER N/A FIBER OPTIC CABLE

SOIL CONDITIONS: HARD (SOFT) WET (MOIST) (DRY)
SAND CLAY ROCK (DIRT) SOLID-ROCK

MATERIAL AS FOUND: D/I C/I STEEL (WRAP-STEEL) TILE
PLASTIC TERRA COTTA ACP RCP CMP PVC UNK
DB CABLE SMOOTH POUR ROUGH POUR OTHER

SHEET No.: 14

PROPOSED: New Utilities Roadway
Mast Arm/Signal Pole Drainage

SIZE AS FOUND: 8" **SIZE EXPECTED:** 8"

FORM BY: C.Reyes **ASSISTED BY:** P.A

NUMBER OF HOLES: 1 **Date:** 6-2-17 **TIME:** _____

UTILTIY CONDITION: (GOOD) FAIR POOR N/A

INSTALLED: PK HUB STEEL (PIN) CHIS "X" CHIS BOX

RIBBON INSTALLED: BLUE (YELLOW) RED GREEN
N/A ORANGE WHITE PINK PURPLE

AT: (CROWN) EDGE OF UTILITY:

SURVEY PIN LOCATED BY: N/A

JOB MEASUREMENT TYPE: TENTHS METRIC INCHES

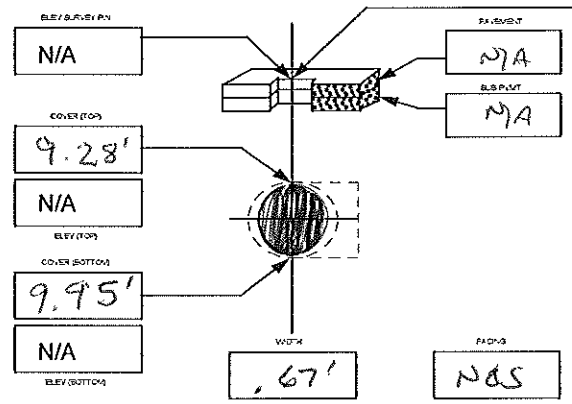

NOTES: Excavated to a depth of 9.28'

Found @ 8" w/SH C.M.

SURVEY INFORMATION _____

GIVEN ELEVATION _____

STATION (±) 271+85.00 OFFSET: N/A LT / RT

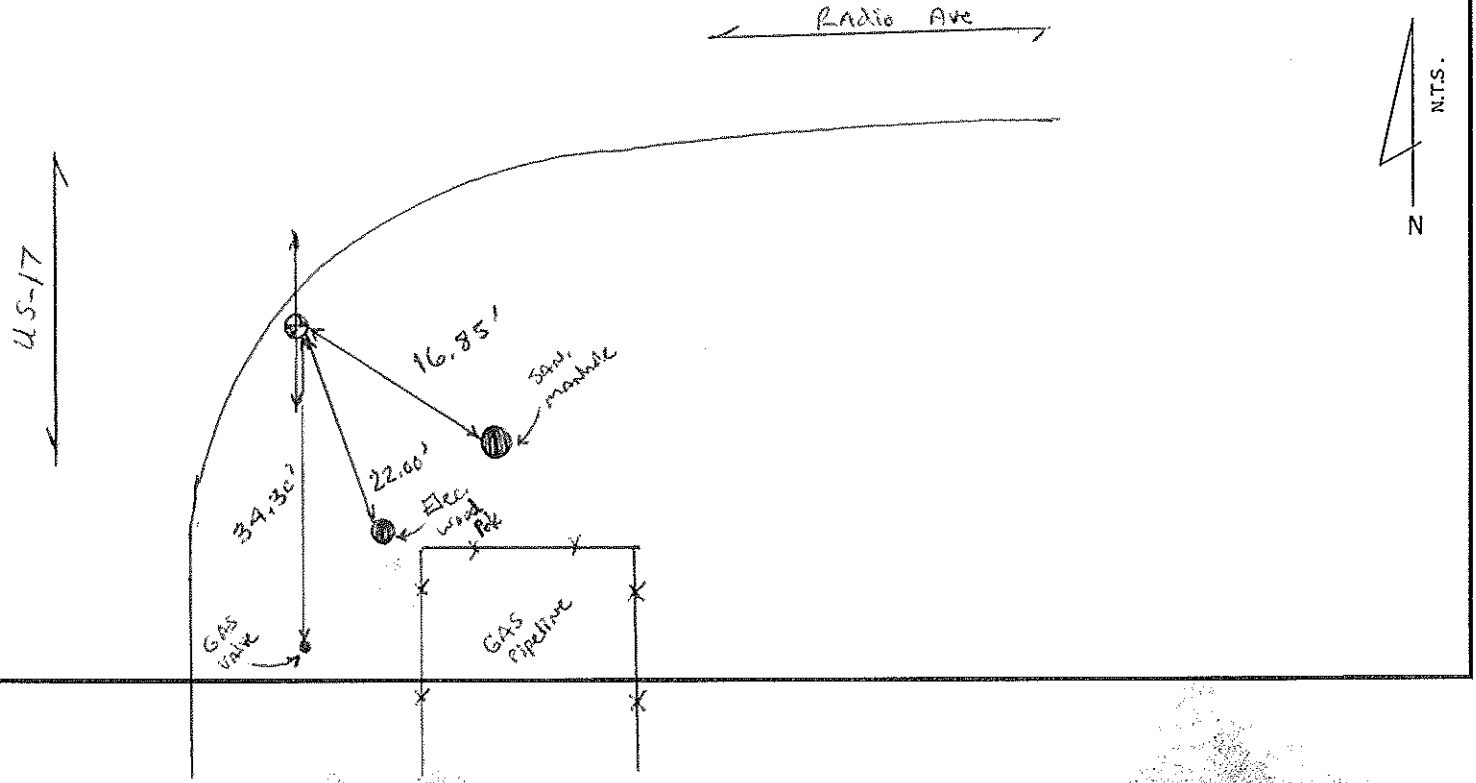

(SD-1)

R. ALEMAN
& Associates, Inc.
CONSULTING ENGINEERS
6199 Lake Gray Blvd., Suite 101, Jacksonville, FL 32244

VACUUM TEST HOLE REPORT

Test Hole No.: 5

FRA Job No.: 2984

PROJECT NAME: JEA-Nassau RW Main(Radio Ave to Harts Rd) | **Subcontract No.:** | **WORK ORDER No.:** 07

LOCATE REQUESTED BY: R.E. Holland & Associates

PAVEMENT TYPE: ASPHALT CONCRETE ASPHALT OVER CONCRETE GRAVEL BRICKS SIDEWALK (N/A)

REQUESTED LOCATE: (GAS) STORM SAN. COMMUNICATION FORCE MAIN CATV WATER TEL. ELECTRIC RAW WATER UNKNOWN RECLAIMED WATER N/A FIBER OPTIC CABLE

PAVEMENT CONDITION: GOOD FAIR POOR (N/A)

LOCATED UTILITY: (GAS) STORM SAN. COMMUNICATION FORCE MAIN CATV WATER TEL. ELECTRIC RAW WATER UNKNOWN RECLAIMED WATER N/A FIBER OPTIC CABLE

SOIL CONDITIONS: HARD (SOFT) WET (MOIST) (DRY) SAND CLAY ROCK (DIRT) SOLID-ROCK

MATERIAL AS FOUND: D/I C/I STEEL (WRAP-STEEL) TILE PLASTIC TERRA COTTA ACP RCP CMP PVC UNK DB CABLE SMOOTH POUR ROUGH POUR OTHER

SHEET No.: 14

PROPOSED: New Utilities Roadway Mast Arm/Signal Pole Drainage

SIZE AS FOUND: 8" **SIZE EXPECTED:** 8"

FORM BY: C.Reyes **ASSISTED BY:** P,A

NUMBER OF HOLES: 1 **Date:** 7-10-17 **TIME:**

UTILTIY CONDITION: (GOOD) FAIR POOR N/A

INSTALLED: PK HUB STEEL (PIN) CHIS "X" CHIS BOX

RIBBON INSTALLED: BLUE (YELLOW) RED GREEN N/A ORANGE WHITE PINK PURPLE

AT: (CROWN) EDGE OF UTILITY:

SURVEY PIN LOCATED BY: N/A

JOB MEASUREMENT TYPE: **TENTHS** METRIC INCHES

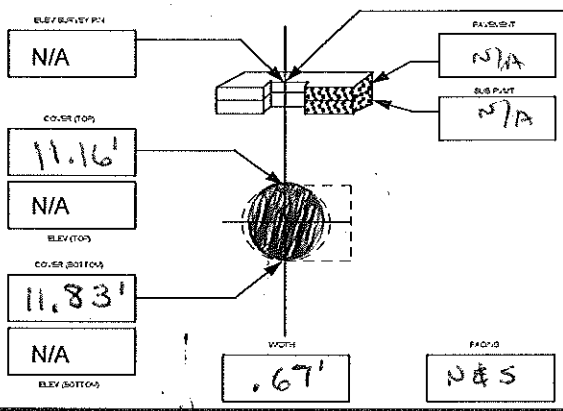

NOTES: Excavated to a depth of 11.16'

- Found a 8" w/stl G.M. (Peninsula Pipeline)

SURVEY INFORMATION

GIVEN ELEVATION
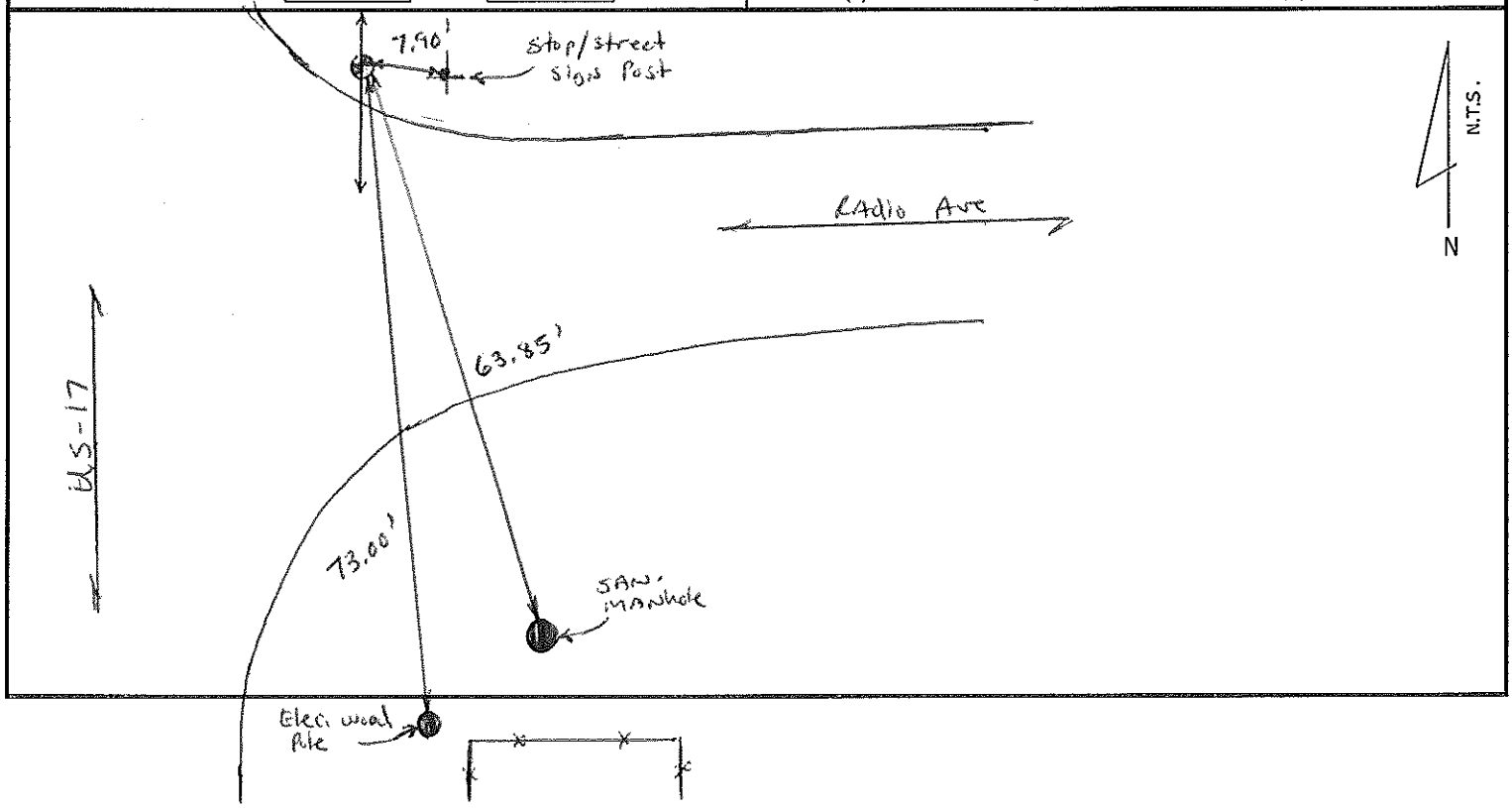
STATION (±) 271+85.00 OFFSET: N/A LT / RT