Florida Department of Transportation

Dec 14, 2016

UTILITY PERMIT

PERMIT NO: 2018-H-294-244

STATE ROAD INFORMATION

County:	Section:	State Road No:	Beginning Mile Post:	Ending Mile Post:
DUVAL		**72090000**	**1.264**	**1.415**

APPLICANT INFORMATION

The Utility Agency Owner (UAO) shall be identified in this Applicant Information Box. When the UAO is a City or County and desires to have the Utility Builder make a joint permit applicant, as prescribed in Section 2.1(4) of the 2017 Utility Accommodation Manual (UAM), the Utility Builder shall also be identified in this Applicant Information Box. A Utility Builder alone cannot apply for a utility permit without the City or County adding them as a joint applicant.

Utility Agency/Owner (UAO)		**Utility Builder** (only applicable when the UAO is a City or County)	
Name:	**JEA (Elizabeth DiMeo)**	Name:	**N/A**
Contact Person:	**JEA (Elizabeth DiMeo)**	Contact Person:	
Address:	**21 W. Church Street T-4**	Address:	**N/A**
City:	**Jacksonville**	City:	**N/A**
State:	**FLORIDA**	State:	**N/A**
Zip:	**32202**	Zip:	**N/A**
Telephone:	**(904) 665-8139**	Telephone:	
Email:	**dimeea@jea.com**	Email:	

WORK DESCRIPTION

The Applicant(s) requests permission from the Florida Department of Transportation (FDOT) to construct, operate, and maintain the utilities as described below and as depicted in the incorporated documentation.

Installation of approximately 800 linear feet of new 16 inch force main along north side of SR15 (US 1) within the rights of way to replace existing 18 inch force main. Existing force main to be abandoned in place.

Utility Work No: **N/A**

Additional sheets are attached and are incorporated into this permit Yes ☐ No ☒

For FDEP certification, the FDOT agency report is attached in accordance with UAM Section 2.4.1 (13) Yes ☐ No ☒

TRAFFIC CONTROL (TCP)

☒ The TCP will comply with the following 600 series index(es) **600, 613**

☐ A TCP has been attached and incorporated into this permit application in compliance with UAM Section 2.4.2

MOT Technician's contact information (may be supplied at the two (2) business day notification to FDOT):

Name: Telephone Email:

COMMENCEMENT OF WORK

The UAO and/or Utility Builder shall commence actual construction in good faith within sixty (60) calendar days after approval of the permit application. If the beginning date is more than sixty (60) calendar days from the date of approval, the UAO and/or Utility Builder must review the permit with the FDOT Approving Engineer listed to make sure no changes have occurred to the transportation facility that would affect the permit's continued approval. The UAO and/or Utility Builder shall make good faith efforts to expedite the work and complete the work within the calendar days indicated.

Anticipated Start Date: **9/14/2018**

Calendar days needed to completed: **270**

APPROVED

2018-H-294-244
Julian McKinley
6/14/2018

Florida Department of Transportation

UTILITY PERMIT

PERMIT NO: 2018-H-294-244

APPLICANT SIGNATURE

By the below signature(s) the UAO and/or Utility Builder agree(s) to construct, operate, and maintain the work as noted in the above Work Description, shown in plans and incorporated documents, in compliance with the UAM, all instructions noted in the FDOT Special Instructions Box, and special instructions incorporated into this permit. The UAO and/or Utility Builder declares, the location of all existing utilities that it owns or has an interest in, both aerial and underground, are accurately shown on the plans of the work areas. In accordance with UAM Section 2.8, the UAO and/or Utility Builder further declares that a letter of notification was delivered to the owners of other facilities within the work areas and that those listed below are the only facility owners known to be involved or potentially impacted by the proposed work.

Date Notified:	Name of other facility owners (attach additional sheets if necessary).
4/11/2018	**AT&T**
4/11/2018	**Comcast**
4/11/2018	**Level 3 Communications, LLC**
4/11/2018	**FPL Fibernet**
4/11/2018	**COJ Fiber**
4/11/2018	**TECO Gas**
4/11/2018	**Verizon/MCI**
4/11/2018	**JEA Electric**
4/11/2018	**JEA Water & Sewer**

Utility Agency/Owner	Utility Builder (when applicable)
Signature: **ELIZABETH DIMEO (digital signature)** Date: **5/15/2018**	Signature: **N/A** Date: **N/A**
Name (printed): **ELIZABETH DIMEO**	Name (printed): **N/A**
Title:	Title: **N/A**

FDOT PROJECT INFORMATION

Pursuant to UAM Section 2.1(10), the utility work is within FDOT projects listed below and must have a Utility Work Schedule for each project approved prior to commencement of work within the FDOT project limits:

There are NO FDOT constructions (proposed or underway). This work is NOT related to an approved Utility Work Schedule.

FDOT SPECIAL INSTRUCTIONS

In accordance with UAM Section 2.7, FDOT incorporates the below and attached special instructions into this permit.

LANE CLOSURE RESTRICTIONS, MONDAY THROUGH FRIDAY, -NO LANE CLOSURES ALLOWED FROM 7:00 AM TO 9:00 AM AND FROM 4:00PM TO 6:00 PM. Abandoned utilities must be grout filled or removed completely.

PERMIT APPROVAL

By signature below, FDOT gives permission to the UAO and /or Utility Builder to construct, operate, and maintain the utilities indicated in this Utility Permit in compliance with the UAM, all incorporated documents, and special instructions. Any changes to the approved work must be approved by the FDOT's Approving Engineer and attached and incorporated into this permit in accordance with UAM Section 2.11.

Approving Engineer: **Julian McKinley (digital signature)** Date: **6/14/2018**

Name: **Julian McKinley**

Title: **N/A**

Notification of Utility Work to be provide to Telephone **(904) 360-5376** or Email: **richard.harvey@dot.state.fl.us**

An FDOT Representative is required to be present on the worksite prior to commencement of work. Yes ☒ No ☐

Rep. Name: **Richard Harvey** Telephone **(904) 360-5372** Email: **richard.harvey@dot.state.fl.us**

APPROVED
2018-H-294-244
Julian McKinley
6/14/2018

Florida Department of Transportation

UTILITY PERMIT

PERMIT NO: 2018-H-294-244

CERTIFICATION

I, the undersigned UAO and/or Utility Builder, hereby CERTIFY that the utilities were constructed and inspected in compliance with the UAM all incorporated documents, and special instructions. Pursuant to UAM Section 2.11, all changes have been approved by the FDOT's Approving Engineer and incorporated into this permit along with all other material certifications, test results, bore logs, approved plans changes, as-built plans or other required documentation.

I also CERTIFY that work began on **MM/DD/YYYY** and was completed on **MM/DD/YYYY** and that the area was left in as good or better condition than when the work began.

Utility Agency/Owner	Utility Builder (when applicable)
Signature: **N/A** Date **N/A**	Signature: **N/A** Date **N/A**
Name (printed): **N/A**	Name (printed): **N/A**
Title: **N/A**	Title: **N/A**

FINAL INSPECTION OF WORK

☐ The work was inspected and found to be in non-compliance as noted below:

None

☐ All issues of non-compliance listed above have been brought into compliance and/or FDOT has no outstanding issues that need to be addressed by the UAO and/or Utility Builder. However, this final inspection does not release the UAO and/or Utility Builder of their continuing responsibilities pursuant to Rule 14-46.001, the UAM, all incorporated documents, and special instructions.

FDOT Inspector: **N/A** Date: **N/A**

Name: **N/A**

Title: **N/A**

APPROVED
2018-H-294-244
Julian McKinley
6/14/2018

CITY OF JACKSONVILLE NOTES

GENERAL

All construction shall be performed in accordance with the approved plans and comply with all standard city policies and practices. City approval is contingent upon any required state or federal permit approvals such as those from the Department of Environmental Protection or the St. Johns River Water Management District (SJRWMD).

UTILITY WORK

Plan approval through Development Services does not include utilities. Proposed water, sewer or electric construction must be approved separately through the respective utility company. In most cases, this will be:

JEA
JEA Tower - 4th Floor
21 W. Church Street
Jacksonville, FL 32202
http://www.jea.com/business/services/devandbuild/developers.asp

WORK WITHIN THE RIGHT-OF-WAY

CITY: Except for new subdivision infrastructure construction, all work performed within a City of Jacksonville right-of-way or easement requires a Right-of-way Permit. The contractor performing the proposed work must have a current Right-of-way Bond on file with Development Services. Right-of-way Permit applications are processed at:

Development Services Customer Service Counter
Edward Ball Building, 2nd Floor
214 N. Hogan St.
Jacksonville, FL 32202
(904) 255-8572
http://row.jaxdev.info/

STATE: All work performed within a state right-of-way requires a permit from the Florida Department of Transportation (FDOT). It is the developer s responsibility to obtain required FDOT permits or maintenance-of-traffic approvals for work within FDOT right-of-ways. The FDOT regional office can be contacted at (904) 360-5200 Any changes to the approved plans needed for FDOT approval must be submitted to Development Services as revisions.

Adjacent State Roads: _____

RAILROAD: Railroad companies may require special approvals or permits to work within their right-of-ways. It is the developer s responsibility to obtain permission from any railroad right-of-way owner before performing any work within their right-of-way.

STORMWATER

Annual reports in compliance with the SJRWMD stormwater permits are required from the maintenance entity of all stormwater management facilities. Send copies of the reports to:

Engineering and Construction Management
Edward Ball Building, 10th Floor
214 N. Hogan St.
Jacksonville, FL 32202
http://www.coj.net/Departments/Public+Works/Engineering+and+Construction+Management/

The owner of any project one (1) acre or larger is required to provide a Notice of Intent (NOI) in accordance with criteria set forth in the city s NPDES permit within 48 hours of beginning construction. Send NOI and NOI fee to:

Florida Department of Environmental Protection
NPDES Stormwater Notices Center, Mail Station #2510
2600 Blair Stone Road
Tallahassee, Florida 32399-2400
(866) 336-6312
http://www.dep.state.fl.us/water/stormwater/npdes/

The contractor shall contact the Environmental Quality Division, Erosion and Sedimentation Control Section (ESC) to provide verification that applicable stormwater permits have been obtained and to schedule a pre-construction ESC site inspection:

Environmental Quality Division
407 North Laura Street, Third Floor
Jacksonville, FL, 32202
(904) 255-7222

FIRE MARSHALL

Plan review and approval does not relieve the contractor of complying with all applicable State Fire Codes.

Underground mains and hydrants shall be installed, completed, and in service prior to construction work.

Underground contractor shall submit to the Fire Marshall for approval complete specs for all underground pipe and fittings relating to fire protection PRIOR to installation and inspection. Contractor shall include manufacturer s name and pipe ID along with contractor s state license number.

LANDSCAPE

A Site Work Permit is required for this project.

☐ Tree Fund payment is due: _____ inches at $_____ = $_____

☐ Article 25 funds are due: _____ inches at $_____ = $_____

TRAFFIC ENGINEERING

TRAFFIC SIGNS

Metro Name	_____	$55.00	ea.	_____
Standard	_____	$55.00	ea.	_____
Stop/Yield	_____	$55.00	ea.	_____
Design	_____	$55.00		_____
Installation	_____	$55.00	/hr.	_____
		TOTAL		_____

☐ Streetlights Required

NOTE: Traffic sign costs change from time to time. If the costs change after plan approval but prior to payment for installation, the developer must pay the for the signs at the current costs. The above total assumes the subdivision will be platted as one phase. If the development is platted as separate phases, design and installation will be calculated separately for each phase.

No lane closures allowed from 7 a.m. till 9 a.m. and from 4 p.m. till 6 p.m.

KINLOCK PUMP STATION FORCE MAIN UPGRADE

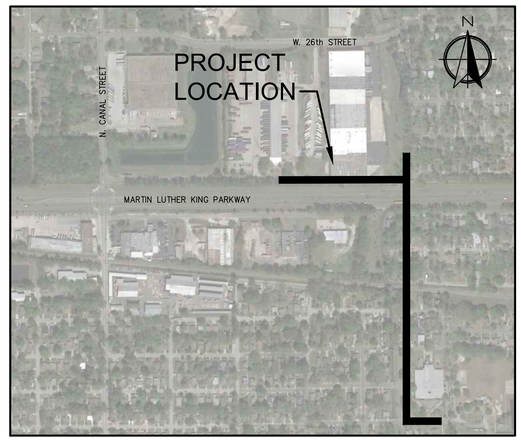

VICINITY MAP

NTS

Sheet Index

C-1	COVER SHEET
C-2	GENERAL NOTES, ABBREVIATIONS & LEGEND
C-3	CIVIL NOTES
C-4	OVERALL AERIAL PLAN
C-5	PLAN AND PROFILE - STA. 8+00 TO STA. 13+00
C-6	PLAN AND PROFILE - STA. 13+00 TO STA. 18+00
C-7	PLAN AND PROFILE - STA. 18+00 TO STA. 20+00
C-8	SANITARY SEWER FORCE MAIN DETAILS
C-9	EROSION & SEDIMENT CONTROL PLAN
C-10	STORMWATER POLLUTION PREVENTION DETAILS
C-11	STORMWATER POLLUTION PREVENTION NOTES
C-12	TEMPORARY TRAFFIC CONTROL PLAN
C-13	TEMPORARY TRAFFIC CONTROL - NOTES & DETAILS

PLAN APPROVAL

_____ Date _____ Development Services Division (Chief)

_____ Date _____ Review Group (Reviewer)

Plan approval is valid for five years after the initial approval date. Revisions made after the initial approval date do not extend this five-year time frame.

PLAN APPROVAL IS SUBJECT TO THE FOLLOWING NOTES AND CONDITIONS:

_____

_____

_____

_____

_____

_____

_____

_____

_____

_____

_____

_____

_____

GENERAL PROJECT INFORMATION

GENERAL

City Development Number	4161.249
Concurrency Application Number	-
Property Appraiser Number (RE #)	-
Zoning Designation	-
PUD Ordinance Number	N/A
FIRM Community Panel	-
Flood Zones (Show in Plans)	NA
Base Flood Elev. (Show in Plans)	N/A
Vertical Datum Used for Project	-
JEA Availability Number	N/A

SUBDIVISION

PSD Number	N/A
City or Private Inspection	N/A
Public or Private Roads	N/A
Subdivision (911) Disk Provided?	N/A

NON-SUBDIVISION

North American Industry Classification System (NAICS)	N/A
Impervious Area (Sq. Ft.)	N/A

C&ES CONSULTANTS, INC.
Construction & Engineering Services Consultants, Inc.
9432 Baymeadows Road., Suite 100
Jacksonville, FL 32256
Phone: 904-652-1186
Business Number CA 27598
candesconsults.com

APPROVED
904.294.244
Julian McKinley
904.629.8348

NOT APPLICABLE | APPLICABLE

SURVEY AND LOCATE DATA:

☐ ■ 1. ALL ELEVATIONS ARE BASED ON NORTH AMERICA VERTICAL DATUM OF 1988 (NAVD 88) AND SHOWN IN FEET.

☐ ■ 2. ELEVATIONS ARE BASED ON NORTH AMERICA VERTICAL DATUM OF 1988 (NAVD 88).

☐ ■ 3. LOCATION OF EXISTING UTILITIES OBTAINED BY SOFT DIG LOCATES WHERE SHOWN ON PLANS, OR INCLUDED WITH BID SPECS.

☐ ■ 4. EXISTING WATER AND SEWER LINES ARE SHOWN AS PER FIELD LOCATES AND SUBDIVISION AS-BUILT PLANS.

☐ ■ 5. UNDERGROUND UTILITIES WERE LOCATED UTILIZING GROUND PENETRATING RADAR (GPR) AND A DIGITAL LOCATOR. CONTRACTOR SHALL BE AWARE THAT IN SOME CASES UTILITIES HAVE BEEN LOCATED, AND SURVEY HAS BEEN COMPLETED ONLY ON ONE SIDE OF THE ROAD.

☐ ■ 6. ALL PIPE LENGTHS SHOWN ON PLAN AND PROFILES ARE FROM CENTER TO CENTER OF MANHOLES, CATCH BASINS, INLETS ETC. OR ALONG THE CENTER LINE OF FORCE MAINS AND WATER MAINS.

☐ ■ 7. INVERT ELEVATIONS SHOWN ON DRAWINGS REFER TO THE CENTERLINE OF MANHOLES, UNLESS OTHERWISE INDICATED.

☐ ■ 8. THE LOCATION OF ALL EXISTING SEWER AND WATER SERVICE LINES MAY NOT BE INDICATED ON THESE PLANS. THE LOCATION OF NEW SERVICES SHALL BE VERIFIED IN THE FIELD.

☐ ■ 9. BENCHMARK DATA: REFERENCE PROJECT BENCHMARK - FOUND FDOT CONCRETE MONUMENT "7209006 GPS 3". ELEVATION 18.566 (NAVD 88) BY FDOT CONTROL POINT FORM.

PERMIT REQUIREMENTS (NOT ALL INCLUSIVE):

☐ ■ 1. CONTRACTOR TO OBTAIN ALL REQUIRED RIGHT-OF-WAY PERMITS.

☐ ■ 2. CONTRACTOR SHALL NOT OPEN CUT STREETS IN THE PROJECT AREA UNLESS SPECIFICALLY SHOWN ON PLANS

☐ ■ 3. THE CONTRACTOR IS RESPONSIBLE FOR OBTAINING A CONSUMPTIVE USE PERMIT (C.U.P.) THROUGH THE ST. JOHNS WATER MANAGEMENT DISTRICT SHOULD DEWATERING ACTIVITIES BE REQUIRED.

☐ ■ 4. THE DEPARTMENT OF TRANSPORTATION, RAILROAD COMPANIES AND C.O.J. ARE TO BE NOTIFIED IN ADVANCE OF CONSTRUCTION PER THEIR RESPECTIVE PERMIT CONDITIONS.

☐ ■ 5. ALL WORK SHALL BE IN ACCORDANCE WITH BID DOCUMENTS, JEA WATER AND SEWER STANDARDS, DETAILS AND MATERIALS MANUAL, REV. 01/18. AND CITY OF JACKSONVILLE STANDARD SPECIFICATIONS AND DETAILS AND ALL APPLICABLE STATE AND LOCAL REGULATIONS.

☐ ■ 6. IF SOLVENT CONTAMINATION IS FOUND IN THE PIPE TRENCH, WORK SHALL BE STOPPED AND THE PROPER AUTHORITIES NOTIFIED. WITH APPROVAL OF THE PERMITTING AGENCY, DUCTILE IRON PIPE, FITTINGS AND SOLVENT RESISTANT GASKET MATERIAL SHALL BE USED IN THE CONTAMINATED AREA. THE DUCTILE IRON PIPE SHALL EXTEND AT LEAST 100 FEET BEYOND ANY SOLVENT NOTED.

☐ ■ 7. THE CONTRACTOR SHALL NOTIFY APPLICABLE UTILITY CONTACT PERSONNEL NOT LESS THAN ONE WEEK PRIOR TO CONSTRUCTION OF FACILITIES IN THEIR RESPECTIVE AREAS.

☐ ■ 8. TREE PROTECTION SHALL BE IN ACCORDANCE WITH JACKSONVILLE ORDINANCE CODE 656 AND/OR AS DETAILED ON SPECIFIC PLAN SHEETS. NO TRIMMING OF OVERHANGING TREE LIMBS WILL BE ALLOWED. USE SMALLER EQUIPMENT IF NECESSARY.

☐ ■ 9. THE CONTRACTOR SHALL LOCATE THE DRAINAGE INLET STRUCTURES IN THE PROJECT AREA AND ERECT SEDIMENTATION CONTROL DEVICES AS NECESSARY PER THE CITY OF JACKSONVILLE STORMWATER POLLUTION PREVENTION PLAN.

☐ ■ 10. CONTRACTOR TO COORDINATE WORK WITH OTHER UTILITIES DURING CONSTRUCTION.

EXISTING UTILITY PROTECTION:

1. IN ORDER TO REDUCE THE DISRUPTION AND COST OF UTILITY DAMAGES OCCURRING IN THE DUVAL COUNTY RIGHT-OF-WAY AND EASEMENTS, THE CONTRACTOR SHALL PREVENT DAMAGES TO EXISTING UTILITIES CAUSED BY HIS WORK THROUGH FIELD VERIFICATION OF THE LOCATION OF THE EXISTING UTILITIES. IN THE CASE OF OPEN EXCAVATION, VERIFICATION MAY BE PERFORMED DURING THE CONTRACTORS WORK. IN THE CASE OF DIRECTIONAL DRILLING, VERIFICATION SHALL TAKE PLACE PRIOR TO MOBILIZATION OF THE DRILLING EQUIPMENT.

2. THE CONTRACTOR SHALL VERIFY THE LOCATION OF EXISTING UTILITIES AS NEEDED TO AVOID CONTACT. EXISTING UTILITIES SHALL BE EXPOSED USING DETECTION EQUIPMENT OR OTHER ACCEPTABLE MEANS. SUCH METHODS MAY INCLUDE BUT SHALL NOT BE LIMITED TO "SOFT DIG" EQUIPMENT AND GROUND PENETRATING RADAR (GPR). THE EXCAVATOR SHALL BE HELD LIABLE FOR DAMAGES CAUSED TO THE CITY'S/JEA'S INFRASTRUCTURE AND THE EXISTING FACILITIES OF OTHER UTILITY COMPANIES.

3. IT SHALL BE THE SOLE RESPONSIBILITY OF THE CONTRACTOR TO LOCATE AND AVOID ALL UTILITIES, OTHER STRUCTURES AND OBSTRUCTIONS BOTH ABOVE AND BELOW GROUND SURFACE. ALL DAMAGE RESULTING FROM THE CONTRACTOR'S FAILURE TO COMPLY WITH THIS REQUIREMENT SHALL BE REPAIRED AT THE CONTRACTOR'S EXPENSE.

ABBREVIATIONS:

AC	ASBESTOS CEMENT	INT.	INTERSECTION
A.G.	ALLEY GRATE	INV.	INVERT
℄	BASE LINE	I.P.	IRON PIPE
B.M.	BENCH MARK	J.W.W.	JACKSONVILLE WATER WORKS
BC	BOTTOM OF CURVE		
C.B.	CATCH BASIN	LT.	LEFT
C.I.	CAST IRON	MB	MAIL BOX
℄	CENTER LINE	M.H.	MANHOLE
C.E.P.	CITY ELECTRIC POLE	N.T.S.	NOT TO SCALE
CONC.	CONCRETE	O.E.	OVERHEAD ELECTRIC
CONST.	CONSTRUCTION	O.T.	OVERHEAD TELEPHONE
C.M.P.	CORRUGATED METAL PIPE	P.R.M.	PERMANENT REFERENCE MONUMENT
C.M.P.A.	CORRUGATED METAL PIPE ARCH		
CULV.	CULVERT	P.V.C.	POLYVINYL CHLORIDE
C&G	CURB & GUTTER	r	RADIUS
C	CUT	R	RATE
D.B.I.	DITCH BOTTOM INVERT	R.C.P.	
D.W. OR DR	DRIVEWAY	RT	RIGHT
D.I.	DUCTILE IRON	R/W	RIGHT OF WAY
E.O.P.	EDGE OF PAVEMENT	R.D.	ROOF DRAIN
ELEV.	ELEVATION	S/W	SIDE WALK
ERCP	ELLIPTICAL REINFORCED CONC. PIPE	S.B.T.	SOUTHERN BELL TELEPHONE
		STA	STATION
EXP. JT.	EXPANSION JOINT	TC	TOP OF CURVE
F	FILL	U.G.E.	UNDERGROUND ELECTRIC
F.H.	FIRE HYDRANT	U.G.T.	UNDERGROUND TELEPHONE
FL	FLOW LINE	U.S.C. & G.S.	UNITED STATES COASTAL & GEODETIC SURVEY
FM	FORCE MAIN		
GALV./GLV	GALVANIZED	V.C.	VITRIFIED CLAY
G	GAS LINE	WM	WATER METER
G.V.	GAS VALVE	W.V.	WATER VALVE
HDPE	HIGH DENSITY POLYETHYLENE PIPE	WLP	WOOD LIGHT POLE
		WPP	WOOD POWER POLE
H.W.	HEAD WALL	WTP	WOOD TELEPHONE POLE
H.C.	HIGH CURB		

RESTORATION NOTES:

1. THE CONTRACTOR SHALL EMPLOY A LAND SURVEYOR, REGISTERED IN THE STATE OF FLORIDA, TO REFERENCE AND RESTORE PROPERTY CORNERS AND LANDMARKS WHICH MAY BE DISTURBED BY CONSTRUCTION, KNOWN CORNER LOCATIONS ARE AVAILABLE FROM THE CITY OF JACKSONVILLE ENGINEERING DIVISION.

2. THE CONTRACTOR SHALL RESTORE/REPLACE ALL CULVERTS, HEADWALLS AND STORM DRAIN INLETS REMOVED OR DISTURBED BY THE CONSTRUCTION OPERATION.

3. TRAFFIC SIGNS AND PAVEMENT MARKINGS SHALL BE RESTORED TO THEIR PRE-CONSTRUCTION CONDITION IN ACCORDANCE WITH CITY OF JACKSONVILLE/FDOT STANDARD SPECIFICATIONS.

4. SIDEWALKS, DRIVEWAYS AND CURBING DAMAGED OR REMOVED DURING CONSTRUCTION SHALL BE REPLACED IN ACCORDANCE WITH JACKSONVILLE STANDARD SPECIFICATIONS. SIDEWALKS REMOVED AND REPLACED IN CURB AND GUTTER AREAS AT INTERSECTIONS SHALL HAVE HANDICAP RAMPS INSTALLED. DRIVEWAYS AND SIDEWALKS SHALL BE SAWCUT ALONG THE RIGHT-OF-WAY LINE OR NEAREST JOINT AND REMOVED AND REPLACED TO THE EDGE OF STREET.

5. GRASS SOD SHALL BE FURNISHED AND PLACED IN THE AREAS DISTURBED OR DAMAGED BY THE CONSTRUCTION OPERATION.

6. ALL PAVEMENT REPAIR SHALL BE IN ACCORDANCE WITH THE CITY OF JACKSONVILLE/FDOT STANDARD DETAILS AND SPECIFICATIONS LATEST EDITION.

7. UNLESS OTHERWISE NOTED, REMOVE AND REPLACE EXISTING PAVEMENT AS PER C.O.J. CASE X (10) PAVEMENT REPLACEMENT DETAIL.

8. CONTRACTOR MUST MAINTAIN AND PRESERVE NEWLY GRADED AREAS AND REPAIR AREAS WHERE SETTLING AND EROSION HAVE OCCURRED.

UTILITY CONTACTS:

A. BLANK — N/A
B. AT&T ~ GREG LUMPIESZ~ NORTH DISTRICT — 904-781-0741
C. AT&T ~ RYAN McFARLAND~ SOUTH DISTRICT — 904-733-8011
D. CITY OF JACKSONVILLE ~ PUBLIC WORKS DEPT. — 904-630-2489
E. CITY OF JACKSONVILLE ~ TRAFFIC OPERATIONS — 904-630-2489
F. FLORIDA DEPT. OF TRANSPORTATION — 904-360-5200
G. JEA ~ WATER DISTRIBUTION ~ JOSH PARKER — 904-665-6052
H. JEA ~ SEWER COLLECTION ~ BILLY GREEN — 904-665-8183
I. JEA ~ GENERAL INFORMATION — 904-665-6000
J. JEA ~ PROJECT OUTREACH — 904-665-7500
K. JEA ~ POWER OUTAGES — 904-665-6000
L. JEA ~ SEWER PROBLEMS — 904-665-4802
M. JEA ~ WATER PROBLEMS — 904-665-4801
N. JEA ~ WATER & SEWER LOCATES ~ BRENDA FORBES — 904-665-4465
O. NASSAU COUNTY ~ PUBLIC WORKS — 904-503-6175
P. ST. JOHNS COUNTY ~ RIGHT-OF-WAY PERMITTING — 904-209-0134
Q. ST. JOHNS COUNTY ~ TRAFFIC SIGNALS — 904-209-0170
R. COMCAST ~ EMERGENCY HOTLINE — 904-380-6341
S. TECO/PEOPLES GAS — 904-443-7316
T. SUNSHINE ONE CALL — 811

GENERAL LEGEND

EXISTING | PROPOSED

RIGHT OF WAY LINE
CENTER LINE
FENCE (HEIGHT & MAT'L. INDICATED) — 6' CHAIN LINK
DITCH OR SWALE
DRAIN PIPE — D
CATCH BASIN
STORM DRAIN GRATE
STORM SEWER
WATER MAIN — W
GRAVITY SEWER — S
SEWER FORCE MAIN — FM
LINE VALVE
FIRE HYDRANT
END CAP
REDUCER
SPOT ELEVATION — × (100.00) OR × 100.00
MANHOLE - TYPE (IF INDICATED)
E - ELECTRIC S - SANITARY
D - STORM T - TELEPHONE — MH1

UTILITY SYMBOLS

ELECTRIC POLE OR S.B.T. POLE (WOOD) — PP OR PP (WITH LIGHT)
WOOD POWER POLE — WPP
ELECTRIC POLE OR S.B.T. POLE (CONC.) — PP OR PP (WITH LIGHT)
CONCRETE POWER POLE — CPP
GUY WIRE
TRAFFIC SIGNAL POLE — TS
IRON PIPE — I.P.
OVERHEAD ELECTRIC — OHE
UNDERGROUND ELECTRIC — UGE
OVERHEAD TELEPHONE — OT
UNDERGROUND TELEPHONE — UGT
GAS MAIN (SIZE & MAT'L. INDICATED) — GAS
CABLE TELEVISION — CATV
FIBER OPTIC LINE — FO
UNDERGROUND CABLE (TYPE UNDETERMINED) — UG
TELEPHONE BOX — T
CATV BOX — CATV
CONCRETE MONUMENT — CM
GAS VALVE
SOIL BORING (NUMBER INDICATED) — SB-1
SOFT DIG (NUMBER INDICATED) — SD1
TREE, SIZE & TYPE INDICATED — 12" O
SIGN - TYPE INDICATED — OR SIGN
BUSH, SHRUB OR HEDGE — SHRUB

NOT APPLICABLE | APPLICABLE

INSTALLATION NOTES:

■ ☐ 1. CONTRACTOR TO REHABILITATE ALL MANHOLES ON PIPE BURST SEWERS VIA COATING/LINING PER JEA SPECIFICATION 446-2, UNLESS OTHERWISE NOTED ON THE PLANS.

■ ☐ 2. CONTRACTOR TO RENEW, REHABILITATE, REPLACE OR REINSTALL AS APPLICABLE ALL SERVICE LATERALS TO R.O.W. LINE.

■ ☐ 3. CONTRACTOR TO INSTALL SEWER SERVICE PIPING A MINIMUM OF 60 INCHES BELOW GRADE. WHERE NEW SANITARY SEWER MAIN IS LESS THAN 5 FEET DEEP, THE SEWER SERVICE PIPE SHALL BE INSTALLED AS DEEP AS POSSIBLE.

☐ ■ 4. WHEN THE DISTANCE BETWEEN A POWER POLE AND THE TRENCH IS LESS THAN THE TRENCH DEPTH, THE CONTRACTOR SHALL BE RESPONSIBLE FOR COORDINATING WITH JEA ELECTRICAL PERSONNEL TO SECURE POWER POLES. THE CONTACTS FOR JEA ARE AS FOLLOWS:
NORTHSIDE~EAST of US-1 MIKE CORBITT @ 665-7991 (mobile 662-0635)
NORTHSIDE~WEST of US-1 ANDY YEAGER @ 665-7998 (mobile 662-0622)
NORTHSIDE~BACKUP ALAN AINSLEY @ 665-7303 (mobile 662-6557)
SOUTHSIDE~SOUTH of BEACH BLVD. TOM KERNS @ 665-6847 (mobile 860-1687)
SOUTHSIDE~NORTH of BEACH BLVD. DERYL BASFORD @ 665-6855 (mobile 662-0616)
SOUTHSIDE~BACKUP EDDIE GALES @ 665-6855 (mobile 662-0616)
A MINIMUM OF TWO (2) WORKING DAYS NOTICE IS REQUIRED FOR AN OUTSIDE MEETING WITH JEA ELECTRICAL TO DISCUSS THE REQUIRED WORK. ADDITIONAL TIME WILL BE REQUIRED BY JEA ELECTRICAL FOR ANY REQUIRED WORK TO BE ACCOMPLISHED.

■ ☐ 5. ALL NEW STORM DRAIN PIPE JOINTS SHALL BE WRAPPED WITH FILTER FABRIC.

■ ☐ 6. THE DESIGN FOR THE PROJECT IS BASED UPON THE "OPEN-CUT" METHOD OF CONSTRUCTION. IF USING ALTERNATIVE MEANS OR METHODS, THE CONTRACTOR SHALL FOLLOW ALL APPLICABLE STANDARDS FOR THAT MEANS OR METHOD.

☐ ■ 7. THE CONTRACTOR SHALL MINIMIZE SERVICE INTERRUPTIONS AT SERVICE CONNECTIONS. THE MEANS AND METHODS SHALL BE LEFT TO THE DISCRETION OF THE CONTRACTOR, SUBJECT TO THE REQUIREMENTS OF THE CONTRACT SPECIFICATIONS. NO EXISTING ACTIVE SERVICE SHALL BE LEFT INTERRUPTED AT THE END OF THE WORK DAY.

☐ ■ 8. CONTRACTOR SHALL PROVIDE ADDITIONAL CORPORATION STOPS FOR FILLING AND DRAINING PURPOSES DURING CONSTRUCTION AS NEEDED. CORPORATION STOPS ARE TO BE PLUGGED AND LEFT IN PLACE. INDICATE CORPORATION STOP LOCATIONS ON RECORD DRAWINGS (AS-BUILTS).

■ ☐ 9. WATER AND SEWER SERVICES SHALL BE TRANSFERRED TO THE NEW MAIN UPON COMPLETION AND F.D.E.P./J.E.A. CERTIFICATION, AND PRIOR TO THE EXISTING MAINS BEING ABANDONED.

☐ ■ 10. IF EXISTING VALVES ARE IN UNPAVED AREAS AND ARE TO BE TAKEN OUT OF SERVICE, THEY SHALL BE CLOSED AND THE VALVE BOX AND COVER SHALL BE REMOVED. IF THE VALVES ARE UNDER PAVED AREAS, THEY SHALL BE CLOSED, THE VALVE BOX GROUT FILLED AND THE COVER REMOVED.

■ ☐ 11. CONTRACTOR SHALL REPLACE EXISTING WATER METER BOXES WHEN DEEMED NECESSARY BY THE JEA INSPECTOR.

☐ ■ 12. CONTRACTOR TO PROVIDE ADDITIONAL DEPTH OF BURY VIA PIPE JOINT DEFLECTION TO ACCOMMODATE VALVE SELECTION PER JEA STANDARDS.

■ ☐ 13. WATER METERS MAY REQUIRE RELOCATION FOR CONSTRUCTION, CONTRACTOR SHALL CONTACT JEA METER DEPARTMENT AND RELOCATE WATER METERS AS NECESSARY.

☐ ■ 14. PRIOR TO COMMENCING ANY EXCAVATION OR GRADING, THE CONTRACTOR SHALL OBTAIN ALL GEOTECHNICAL AND TOPOGRAPHIC SURVEY DATA AND LOCATIONS OF ABOVE GROUND AND UNDERGROUND UTILITIES. SHOULD THE CONTRACTOR DISCOVER ANY INACCURACIES, ERRORS OR OMISSIONS IN THE SURVEY DATA, HE SHALL IMMEDIATELY NOTIFY THE DESIGN ENGINEER IN ORDER THAT PROPER ADJUSTMENTS CAN BE ANTICIPATED AND ORDERED.

☐ ■ 15. SHEET PILING WILL BE REQUIRED ON ALL EXCAVATIONS DEEPER THAN 16 FEET.

Construction & Engineering Services Consultants, Inc.
9432 Baymeadows Road, Suite 1/0
Jacksonville, FL 32256
Phone: (904) 642-1595
Business Number CA 27598
C&ES CONSULTANTS, INC.

APPROVED 6/14/2018

NO.	BY	DATE	REVISIONS
6.			
5.			
4.			
3.			
2.			
1.			

DESIGN ENGINEER
CLARO N. MAGPANTAY, P.E.
FLORIDA REGISTRATION NO. 60164

DESIGNER: MAGPANTAY
DRAWN BY: PAGE
DATE: APR. 2018
CHECKED BY: GBAY
DATE: APR. 2018

JEA Building Community

KINLOCK PUMP STATION
FORCE MAIN UPGRADE
GENERAL NOTES, ABBREVIATIONS AND LEGEND

PROJ. NO. 17016
DATE: APR. 2018
SCALE: NONE

NO. SHEETS 13
SHEET NO. 2
DRAWING NO. C-2

Z:\Projects\17016 JEA MCMillan-Kinlock PS Force Mains\dwg\Details.dwg Current Layout Tab = JEA Notes Fri Apr 27, 2018 - 08:01

GENERAL SITE NOTES

1. ALL WORK AND MATERIALS SHALL BE IN COMPLETE ACCORDANCE WITH CITY OF JACKSONVILLE AND JEA STANDARD DETAILS AND SPECIFICATION INCLUDING ALL APPLICABLE LOCAL AND STATE REQUIREMENTS.
2. ALL WORK SHALL BE PERFORMED IN A SAFE MANNER. ALL SAFETY RULES AND GUIDELINES OF O.S.H.A. SHALL BE FOLLOWED. THE CONTRACTOR SHALL BE WHOLLY RESPONSIBLE FOR ANY INJURIES OF HIS EMPLOYEES, AND ANY DAMAGE TO PRIVATE PROPERTY OR PERSONS DURING THE COURSE OF THIS PROJECT. ALL COSTS ASSOCIATED WITH COMPLYING WITH OSHA REGULATIONS AND THE FLORIDA TRENCH SAFETY ACT MUST BE INCLUDED IN THE CONTRACTORS BID.
3. THE CONTRACTOR SHALL BE RESPONSIBLE FOR VISITING THE JOB SITE PRIOR TO PREPARING THE BID FOR FAMILIARIZING HIMSELF WITH THE NATURE AND THE EXTENT OF THE WORK AND LOCAL CONDITIONS, EITHER SURFACE OR SUBSURFACE, WHICH MAY AFFECT THE WORK TO BE PERFORMED, AND THE EQUIPMENT, LABOR AND MATERIALS REQUIRED. FAILURE TO DO SO WILL NOT RELIEVE THE CONTRACTOR OF COMPLETE PERFORMANCE UNDER THIS CONTRACT. THE CONTRACTOR IS URGED TO TAKE COLOR PHOTOGRAPHS ALONG THE ROUTE OF THE PROJECT TO RECORD EXISTING CONDITIONS PRIOR TO CONSTRUCTION AND TO AID IN RESOLVING POSSIBLE FUTURE COMPLAINTS THAT MAY OCCUR DUE TO THE CONSTRUCTION OF THE PROJECT.
4. IT SHALL BE THE CONTRACTOR'S RESPONSIBILITY TO EITHER CONDUCT ANY FIELD EXPLORATION OR ACQUIRE ANY GEOTECHNICAL ASSISTANCE REQUIRED TO ESTIMATE THE AMOUNT OF UNSUITABLE MATERIAL THAT WILL REQUIRE REMOVAL AND/OR TO ESTIMATE THE AMOUNT OF OFF SITE BORROW THAT WILL BE REQUIRED.
5. ALL IMPROVEMENTS SHOWN ARE TO BE WARRANTED BY THE CONTRACTOR TO JEA FOR A PERIOD OF TWO YEARS FROM DATE OF ACCEPTANCE BY JEA. SEE JEA STANDARD MANUAL SECTION 429.
6. ELEVATIONS SHOWN THUS: (20.00) AND REFER TO NORTH AMERICAN VERTICAL DATUM OF 1988 (NAVD 88).
7. BOUNDARY AND TOPOGRAPHIC INFORMATION SHOWN HEREON TAKEN FROM MAP PROVIDED BY CLARSON & ASSOCIATES: DATED, OCTOBER 30, 2017.
8. REFERENCE PROJECT BENCHMARK: FOUND FDOT CONCRETE MONUMENT "7209006 GPS 3". ELEVATION 18.566 (NAVD 88) AS PROVIDED BY FDOT PRIMARY CONTROL POINT FORM.
9. CONTRACTOR SHALL BE RESPONSIBLE FOR OBTAINING ALL NECESSARY PERMITS AND INSURANCE REQUIRED FOR THE PROJECT INCLUDING RIGHT-OF-WAY PERMITS FOR WORK IN THE RIGHT-OF-WAY OR EASEMENTS.
10. THE CONTRACTOR SHALL COORDINATE THE WORK WITHIN COUNTY OR STATE RIGHT-OF-WAY WITH THE PROPER AGENCIES FOR MAINTENANCE OF TRAFFIC AND METHOD OF CONSTRUCTION & REPAIR.
11. THE CONTRACTOR SHALL COORDINATE THEIR CONSTRUCTION WITH ALL OTHER CONTRACTORS. IN THE EVENT OF ANY CONFLICT WHATSOEVER, THE CONTRACTOR SHALL NOTIFY THE ENGINEER AND OWNER PRIOR TO PROCEEDING WITH CONSTRUCTION.
12. ALL CLEARING AND GRUBBING REQUIRED FOR 16" SANITARY SEWER FORCE MAIN INSTALLATION IS INCLUDED IN THIS PROJECT AND THE CLEARING AND GRUBBING OF ALL RIGHT-OF-WAY OR EASEMENTS SHALL BE INCLUDED AS PART OF THIS PROJECT.
13. CONTRACTOR IS RESPONSIBLE FOR PROTECTION OF ALL SURVEY AND PROPERTY MONUMENTS. IF A MONUMENT IS DISTURBED, THE CONTRACTOR SHALL CONTRACT WITH THE SURVEYOR OF RECORD FOR REINSTALLATION OF THE MONUMENT.
14. ALL DEBRIS RESULTING FROM ALL ACTIVITIES SHALL BE DISPOSED OF OFF-SITE BY CONTRACTOR, IN ACCORDANCE WITH COUNTY REGULATIONS.
15. ALL EXCESS SUITABLE AND UNSUITABLE MATERIAL SHALL BE REMOVED FROM THE SITE BY THE CONTRACTOR UNLESS DIRECTED OTHERWISE BY ENGINEER OR OWNER.
16. ALL EXISTING TREES TO REMAIN SHALL BE PRESERVED AND PROTECTED.
17. BURNING OF TREES, BRUSH AND OTHER MATERIAL IS NOT ALLOWED.
18. IF DEWATERING CAPACITY REQUIRES A CONSUMPTIVE USE PERMIT (C.U.P.) IT SHALL BE THE CONTRACTOR'S RESPONSIBILITY TO OBTAIN THE PERMIT THROUGH THE ST. JOHNS RIVER WATER MANAGEMENT DISTRICT.
19. THE CONTRACTOR SHALL USE NECESSARY MEANS AND METHODS TO CONTROL SURFACE AND GROUNDWATER DURING CONSTRUCTION, BUT NOT LIMITED TO SURFACE, GRADING, DEWATERING TRENCHES WITH SUMP PUMPS, WELL POINTS, ETC. THE CONTRACTOR SHALL BE RESPONSIBLE FOR DETERMINING ACTUAL AND LIKELY DEPTHS TO GROUNDWATER AND THE WATER CONTROL NECESSARY TO MEET MOISTURE AND DENSITY REQUIREMENTS FOR THE NATIVE OR IMPORTED SOILS.
20. THE CONTRACTOR SHALL COORDINATE WITH THE JEA AND THE ENGINEER FOR APPROVAL OF ALL DEWATERING OPERATIONS PRIOR TO COMMENCEMENT.
21. THE LOCATION OF ALL EXISTING UTILITIES, STRUCTURES AND IMPROVEMENTS SHOWN ON THE DRAWINGS IS BASED ON LIMITED INFORMATION AND MAY NOT HAVE BEEN FIELD VERIFIED. THE LOCATIONS ARE APPROXIMATE. THE CONTRACTOR SHALL NOTIFY RESPECTIVE UTILITY OWNERS AND FIELD VERIFY LOCATIONS OF EXISTING UTILITIES AND OTHER IMPROVEMENTS PRIOR TO COMMENCING ANY CONSTRUCTION. IF THE LOCATIONS SHOWN ARE CONTRARY TO THE ACTUAL LOCATIONS, THE CONTRACTOR SHALL NOTIFY THE ENGINEER OF THE DISCREPANCY. THIS DISCREPANCY SHOULD BE RESOLVED PRIOR TO COMMENCING CONSTRUCTION. THE CONTRACTOR SHALL EXERCISE EXTREME CAUTION WHEN WORKING IN AREAS NEAR EXISTING UTILITIES AND IMPROVEMENTS AND SHALL BE RESPONSIBLE FOR AND SHALL REPAIR OR PAY FOR ALL DAMAGE MADE TO EXISTING UTILITIES OR OTHER IMPROVEMENTS. PRIOR TO COMMENCEMENT OF ANY CONSTRUCTION, THE CONTRACTOR SHALL VERIFY ALL GRADES, INVERTS AND TYPE OF MATERIAL OF EXISTING UTILITIES TO WHICH HE SHALL CONNECT.
22. FOR SEDIMENT AND EROSION CONTROL PLANS, DETAILS AND NOTES REFER TO SHEETS C-8, C-9 AND C-10.
23. EROSION CONTROL MEASURES SHALL REMAIN IN PLACE AND MAINTAINED PROPERLY UNTIL PERMANENT VEGETATIVE COVER HAS BEEN ESTABLISHED.
24. ANY DAMAGE INCURRED BY EROSION SHALL BE RECTIFIED IMMEDIATELY.
25. AFTER RESTORATION IS COMPLETE, TEMPORARY CONTROL MEASURES SHALL BE REMOVED AND DISPOSED OF PROPERLY.
26. THESE ENGINEERING DRAWINGS MAY NOT SHOW ALL THE STANDARD DETAILS REQUIRED TO COMPLETE CONSTRUCTION OF THIS PROJECT. IT IS THE CONTRACTOR'S RESPONSIBILITY THAT THE CONSTRUCTION SHALL BE IN ACCORDANCE WITH ALL CURRENT CITY OF JACKSONVILLE AND JEA UTILITIES STANDARD DETAILS AND SPECIFICATIONS. THE CONTRACTOR SHALL OBTAIN A COPY OF JEA UTILITIES AND CITY OF JACKSONVILLE STANDARD DETAILS AND SPECIFICATIONS PRIOR TO BEGINNING CONSTRUCTION.
27. THE CONTRACTOR SHALL BE RESPONSIBLE FOR ESTABLISHING A PERMANENT STAND OF SOD AND/OR GRASS PER CITY OF JACKSONVILLE STANDARDS AND MEETING THE NPDES FINAL STABILIZATION REQUIREMENTS.
28. UNSUITABLE MATERIALS UNDER NEW FORCE MAIN PIPES OR STRUCTURES SHALL BE REMOVED AND REPLACED WITH SELECTED BACKFILL, PROPERLY COMPACTED.
29. "AS-BUILT" DRAWINGS - FORCE MAIN AS-BUILTS PROVIDED TO JEA ARE REQUIRED TO BE SIGNED AND SEALED BY A FLORIDA REGISTERED LAND SURVEYOR. IT SHALL BE THE CONTRACTOR'S RESPONSIBILITY TO CONTRACT WITH A LAND SURVEYOR REGISTERED IN THE STATE OF FLORIDA FOR THE PREPARATION, FIELD LOCATIONS, CERTIFICATION AND SUBMITTAL OF "AS-BUILT" DRAWINGS IN ACCORDANCE WITH CURRENT JEA UTILITIES. CONTRACTOR SHALL ALSO SHOW ALL PIPE INVERTS. ITEMS INTENDED FOR DEDICATION TO JEA UTILITIES SHALL NOT BE CONSIDERED COMPLETE UNTIL "AS-BUILT" DRAWINGS ARE APPROVED, AND THE WORK ACCEPTED FOR DEDICATION BY JEA UTILITIES.
29. SHOP DRAWINGS FOR FORCE MAIN CONSTRUCTION: ALL PIPES, STRUCTURES AND MANUFACTURERS LITERATURE FOR ALL MATERIALS SHALL BE SUBMITTED TO THE ENGINEER FOR REVIEW AND APPROVAL PRIOR TO CONSTRUCTION COMMENCING BY THE CONTRACTOR.
30. THE CONTRACTOR SHALL MAINTAIN A COPY OF ALL PERMITS ON THE JOB SITE AND SHALL ADHERE TO ALL CONDITIONS.
31. UPON COMPLETION OF ALL CONSTRUCTION, PROJECT SHALL LEFT CLEAN.

FORCE MAIN NOTES

1. FORCE MAIN LINES 16 INCHES AND LARGER SHALL BE AWWA STANDARD C-905, DR25 PIPE WITH DUCTILE IRON MJ FITTINGS, UNLESS OTHERWISE INDICATED ON THE PLANS. FORCE MAIN MUST HAVE 36 INCHES MINIMUM COVER, EXCEPT AS INDICATED OTHERWISE. WHERE CALLED FOR, DUCTILE IRON PIPE, CLASS 51 MINUMUM THICKNESS IS REQUIRED.
2. A HORIZONTAL AND VERTICAL SEPARATION FROM OTHER UTILITIES SHALL BE MAINTAINED PER JEA STANDARD DETAILS (PLATE S-26).
3. FORCE MAIN LINES SHALL BE PRESSURE TESTED AND LEAKAGE TESTED TO 150 PSI FOR TWO HOURS IN ACCORDANCE WITH JEA STANDARD SPECIFICATION SECTION 429 IN THE PRESENCE OF THE ENGINEER AND JEA REPRESENTATIVE
4. PVC PIPE RESTRAINT SHALL CONFORM TO JEA PLATE NUMBERS S-38A TO S-38D, S-39 TO S-42 AND THRUST BLOCK ING SHALL CONFORM TO JEA PLATE S-45.
5. NO PART OF EXISTING 18" FORCE MAIN LINES SHALL BE DEMOLISHED, GROUT FILL OR DISRUPTED UNTIL THE NEW 16" PVC FORCE MAIN HAS BEEN INSTALLED AND IS CLEARED TO BE PLACED INTO OPERATION.

C&ES CONSULTANTS, INC.
Construction & Engineering Services Consultants, Inc.
9432 Baymeadows Road, Suite 1/0
Jacksonville, FL 32256
Telephone: 904-645-1525
Business Number CA 27598

APPROVED
2018-11-291-214
6/14/2018

NO.	BY	DATE	REVISIONS
6.			
5.			
4.			
3.			
2.			
1.			

DESIGN ENGINEER
CLARO N. MAGPANTAY, P.E.
FLORIDA REGISTRATION NO. 60164

DESIGNER:	MAGPANTAY
DRAWN BY:	PAGE
DATE:	APR. 2018
CHECKED BY:	GRAY
DATE:	APR. 2018

JEA Building Community

KINLOCK PUMP STATION
FORCE MAIN UPGRADE
CIVIL NOTES

PROJ. NO. 17016	
DATE: APR. 2018	
SCALE: NONE	

NO. SHEETS 33
SHEET NO. 3
DRAWING NO. C-3

Z:\Projects\17016 JEA MCMillan-Kinlock PS Force Mains\dwg\Details.dwg Current Layout Tab = Civil Notes Thu Apr 26, 2018 - 07:31

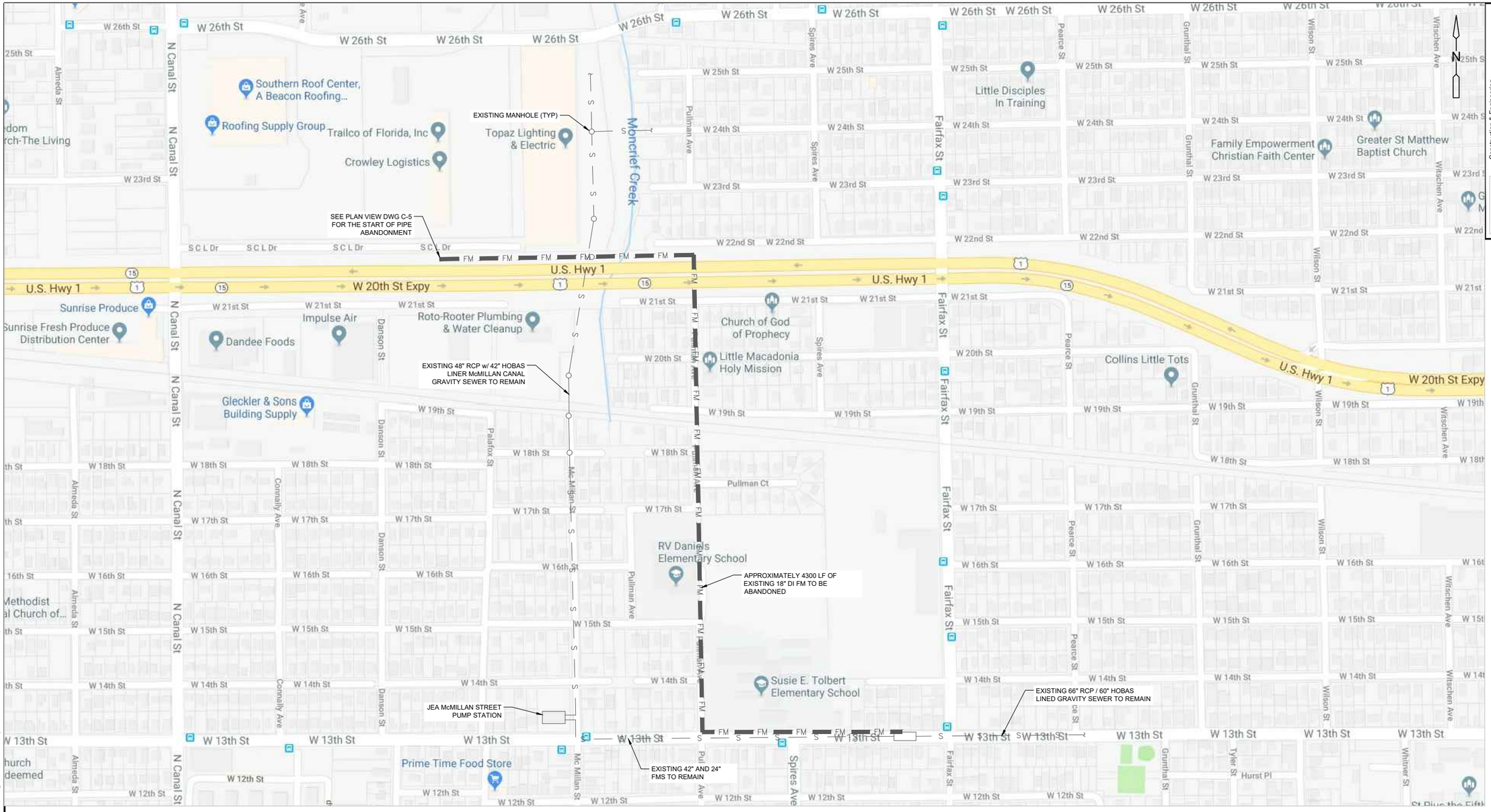

LIMITS OF EXISTING 18" SANITARY SEWER FORCE MAIN ABANDONMENT

Construction & Engineering Services Consultants, Inc.
9432 Raymondview Road, Suite 1/0
Jacksonville, FL 32256
Telephone: 904-642-1595
Business Number CA 27598

C&ES CONSULTANTS, INC.

APPROVED
6/14/2018
Joshua McKinney

NO.	BY	DATE	REVISIONS
6			
5			
4			
3			
2			
1			

DESIGN ENGINEER
CLARO N. MAGPANTAY, P.E.
FLORIDA REGISTRATION NO. 60164

DESIGNER: MAGPANTAY
DRAWN BY: PAGE
DATE: APR. 2018
CHECKED BY: GRAY
DATE: APR. 2018

JEA Building Community

KINLOCK PUMP STATION
FORCE MAIN UPGRADE
OVERALL AERIAL PLAN

PROJ. NO. 17016
DATE: APR. 2018
SCALE: NONE

NO. SHEETS 13
SHEET NO. 4
DRAWING NO. C-4

Z:\Projects\17016 JEA MCMillan-Kinlock PS Force Mains\dwg\Details.dwg Current Layout Tab = Aerial Fri Apr 27, 2018 - 08:02

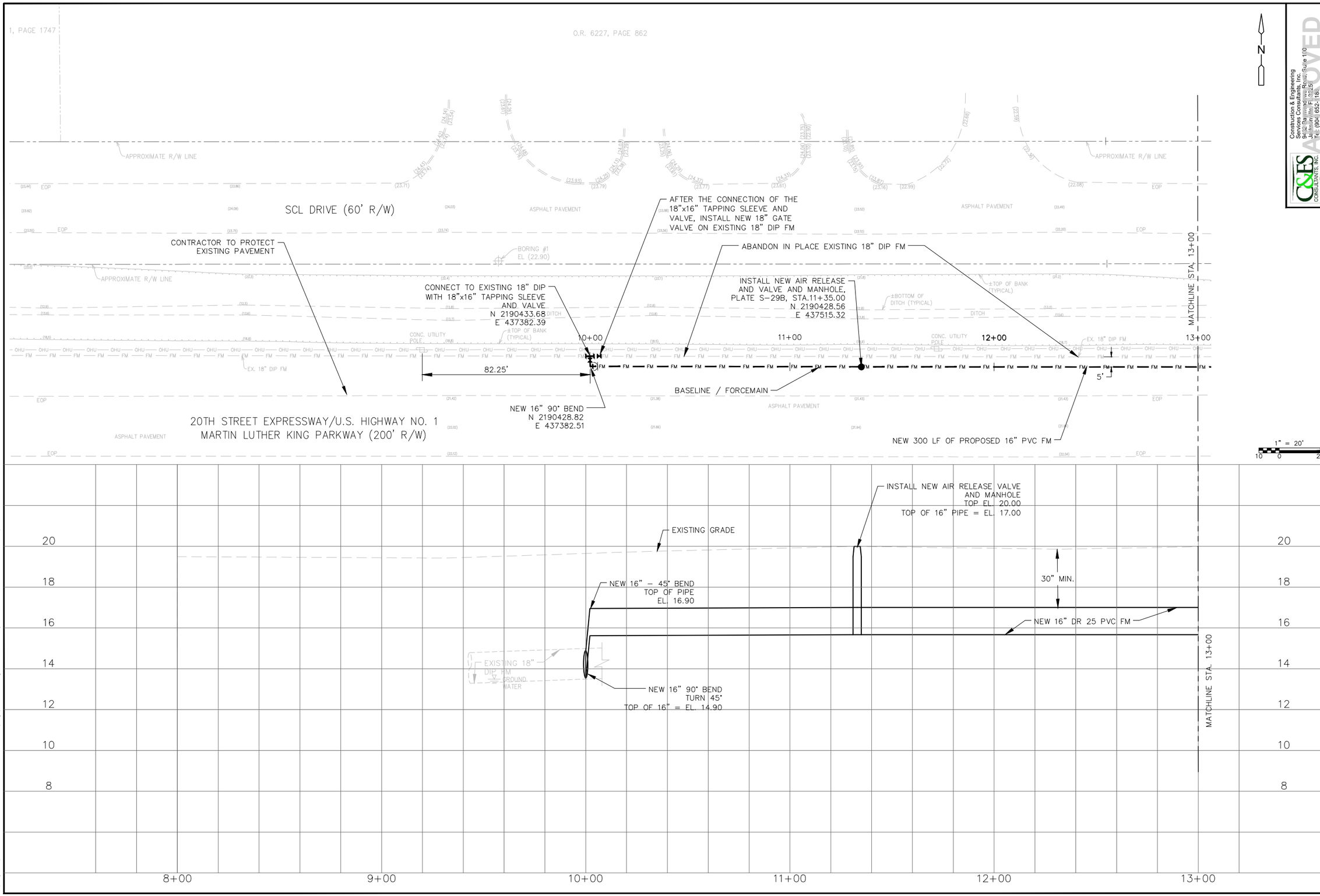

Z:\Projects\17016 JEA MCMillan-Kinlock PS Force Mains\dwg\Site Plan.dwg Current Layout Tab = Plan 05 Thu Apr 26, 2018 - 11:54

Construction & Engineering Services Consultants, Inc.
9432 Raymond-Ivey Road, Suite 1/0
Jacksonville, FL 32256
Tel: (904) 683-1455
Business Number CA 27598
C&ES CONSULTANTS, INC.

APPROVED
20-18-E-291-214
Joshua McKinney
6/14/2018

NO.	BY	DATE	REVISIONS
6			
5			
4			
3			
2			
1			

DESIGN ENGINEER
CLARON N. MAGPANTAY, P.E.
FLORIDA REGISTRATION NO. 60164

DESIGNER: MAGPANTAY
DRAWN BY: PAGE
DATE: APR. 2018
CHECKED BY: GBAY
DATE: APR. 2018

JEA Building Community

KINLOCK PUMP STATION
FORCE MAIN UPGRADE
PLAN & PROFILE - STA. 8+00 TO STA. 13+00

PROJ. NO. 17016
DATE: APR. 2018
SCALE: 1" = 20' HORIZ. 1" = 2' VERT.

NO. SHEETS 13
SHEET NO. 5
DRAWING NO. C-5

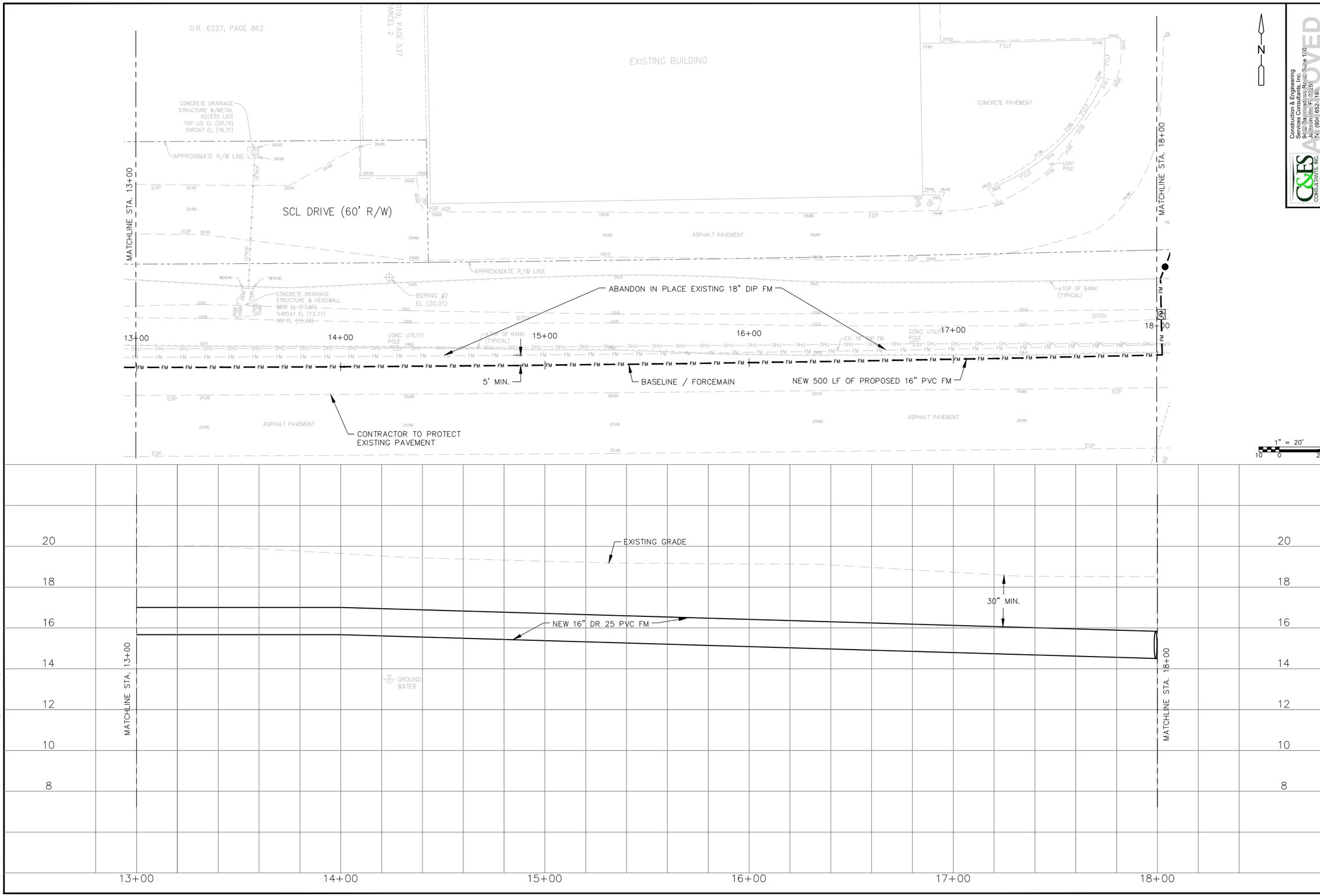

Construction & Engineering Services Consultants, Inc.
9432 Baymeadows Road, Suite 100
Jacksonville, FL 32256
Tel: (904) 642-1595
Business Number CA 27598

C&ES CONSULTANTS, INC.

APPROVED
2018-EE-291-214
Joshua McKinney
6/14/2018

NO.	BY	DATE	REVISIONS
6.			
5.			
4.			
3.			
2.			
1.			

DESIGN ENGINEER
CLARO N. MAGPANTAY, P.E.
FLORIDA REGISTRATION NO. 60164

DESIGNER:	MAGPANTAY
DRAWN BY:	PAGE
DATE:	APR. 2018
CHECKED BY:	GRAY
DATE:	APR. 2018

JEA Building Community

KINLOCK PUMP STATION
FORCE MAIN UPGRADE
PLAN & PROFILE - STA. 13+00 TO STA. 18+00

PROJ. NO. 17016
DATE: APR. 2018
SCALE: 1" = 20' HORIZ. 1" = 2' VERT.

NO. SHEETS 13
SHEET NO. 6
DRAWING NO. C-6

Z:\Projects\17016 JEA MCMillan-Kinlock PS Force Mains\dwg\Site Plan.dwg Current Layout Tab = Plan 06 Thu Apr 26, 2018 - 11:53

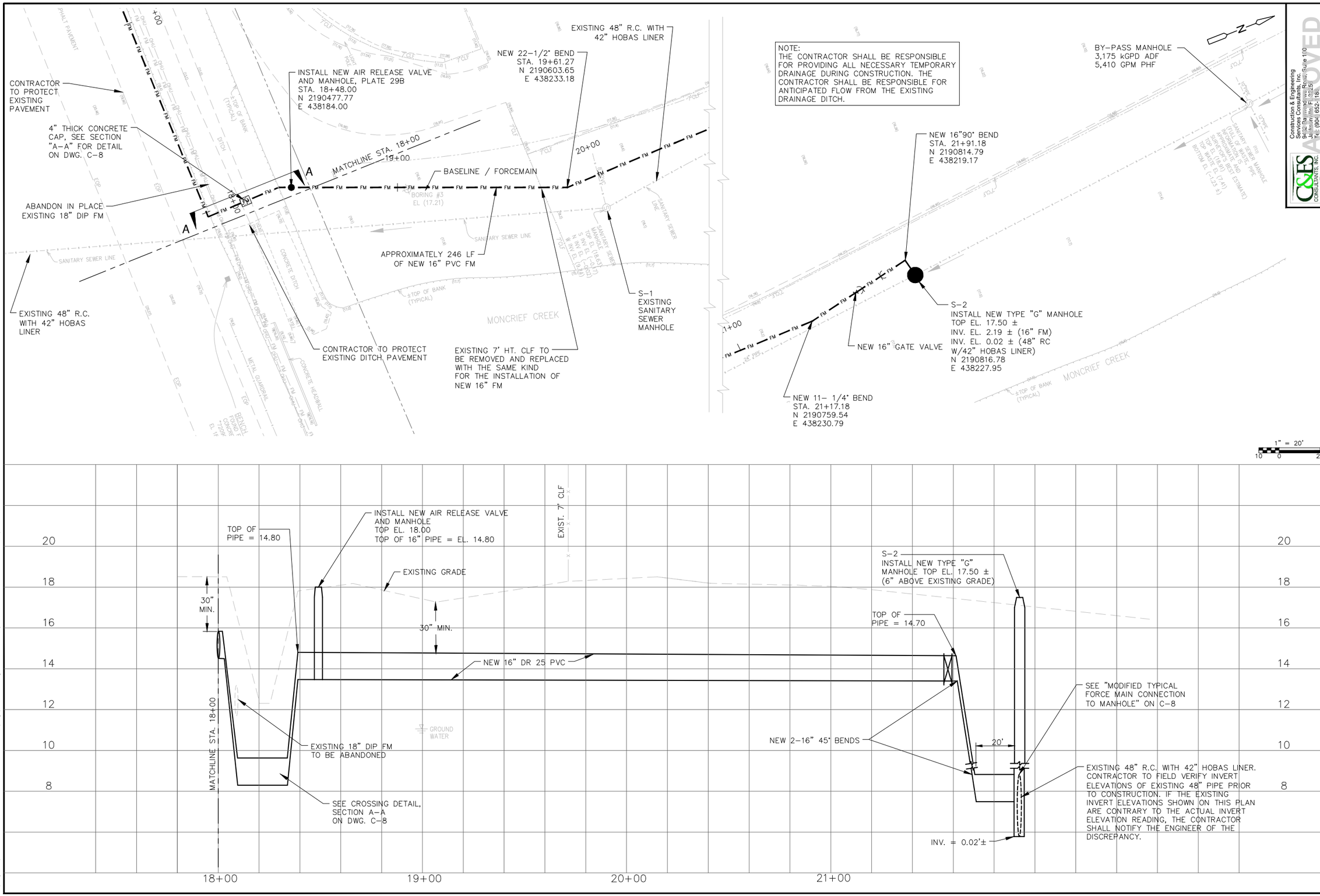

Construction & Engineering Services Consultants, Inc.
9432 Baymeadows Road, Suite 1/0
Jacksonville, FL 32256
(904) 642-1945
Business Number CA 27598

C&ES CONSULTANTS, INC.

APPROVED
2018-11-291-214
6/14/2018
Joshua McKinney

NO.	BY	DATE	REVISIONS
6			
5			
4			
3			
2			
1			

DESIGN ENGINEER
CLARO N. MAGPANTAY, P.E.
FLORIDA REGISTRATION NO. 60164

DESIGNER: MAGPANTAY
DRAWN BY: PAGE
DATE: APR. 2018
CHECKED BY: GBAY
DATE: APR. 2018

JEA Building Community

KINLOCK PUMP STATION
FORCE MAIN UPGRADE
PLAN & PROFILE - STA. 18+00 TO STA. 20+00

PROJ. NO. 17016
DATE: APR. 2018
SCALE: 1" = 20' HORIZ. 1" = 2' VERT.

NO. SHEETS 13
SHEET NO. 7
DRAWING NO. C-7

Z:\Projects\17016 JEA MCMillan-Kinlock PS Force Mains\dwg\Site Plan.dwg Current Layout Tab = Plan 07 Fri Apr 27, 2018 - 08:23

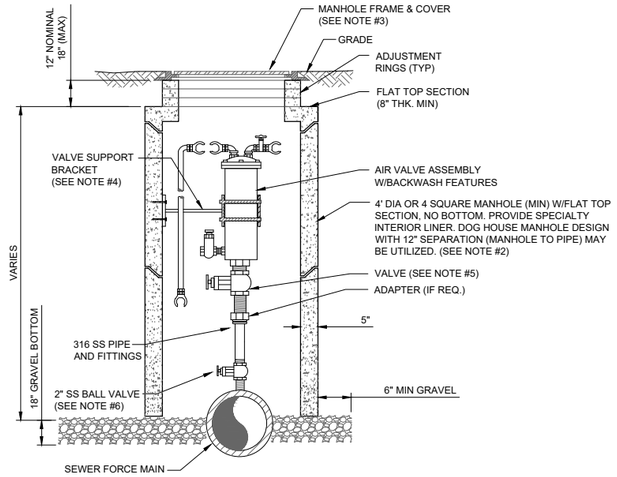

NOTES:

1. THE AIR ASSEMBLY MANHOLE SHALL BE LOCATED OUTSIDE OF THE ROADWAY PAVEMENT AREA (I.E. LOCATED IN NON-TRAFFIC AREAS).
2. THE CONCRETE MANHOLE SHALL INCLUDE A POLYURETHANE SPECIALTY LINER (PER SPEC SECTION 446) TO BE INSTALLED ON THE INTERIOR SURFACES INCLUDING THE RISER SECTION TOP AND THE ADJUSTMENT RINGS. A BITUMINOUS WATERPROOFING MATERIAL SHALL BE PROVIDED ON THE OUTSIDE SURFACES OF THE MANHOLE.
3. FRAME AND COVER SHALL BE JEA STANDARD. THE COVER SHALL HAVE NO GASKET TO ALLOW AIR TO EXIT VAULT (REMOVE GASKET IF NECESSARY FROM THE UNDER SIDE OF STANDARD JEA COVER). THE COVER (WHEN FLIPPED OPEN) MUST CLEAR THE AIR VALVE ASSEMBLY AT ALL TIMES OR A SQUARE TOP WITH ALUMINUM DOOR SHALL BE PROVIDED (NON-TRAFFIC LOCATIONS ONLY).
4. A VALVE SUPPORT BRACKET IS ONLY REQUIRED FOR ASSEMBLIES WHICH INCLUDE OFF-SET PIPING. THE BRACKET SHALL BE WELDED AND FABRICATED FROM ALL 316 STAINLESS STEEL MATERIALS AND INCLUDE 6" x 6" x ⅜" THICK END PLATES (CONTOURED TO MATCH ATTACHING SURFACES), 3" ANGLE IRON FOR SUPPORT ARM AND TWO U-BOLTS ⅝" DIA TO ATTACH AROUND AIR VALVE. SECURE TO CONCRETE MANHOLE WITH FOUR ½" DIA X 2" LONG S/S ANCHOR (MIN). MODIFY THE ABOVE AS REQUIRED TO FIT SPECIFIC AIR VALVE AND TO ASSURE A SOLID SUPPORT BRACKET.
5. FOR PIPE SIZES 3 INCH AND SMALLER, PROVIDE A STAINLESS STEEL BALL VALVE (2" MIN). FOR PIPE SIZES 4 INCH AND LARGER, PROVIDE A FLANGE GATE VALVE (WHEEL OPERATOR) OR PLUG VALVE. (LEVER ARM OPERATOR) SEE SPECIFICATION FOR ADDITIONAL REQUIREMENTS.
6. FOR A 2" AIR VALVE, PROVIDE 2" STAINLESS STEEL BALL VALVE AT THE MAIN. FOR AIR VALVES LARGER THAN 2" SIZE, PROVIDE A TAPPING SLEEVE OR DUCTILE IRON TEE FITTING. ALSO, FOR OFF-SET PIPING LARGER THAN 2 INCH SIZE, PROVIDE A GATE VALVE (INSTALLED VERTICALLY NEAR MAIN). SEE SPECIFICATIONS FOR ADDITIONAL REQUIREMENTS.

AIR VALVE ASSEMBLY INSIDE MANHOLE IN ROW

JANUARY 2016 PLATE S-29B

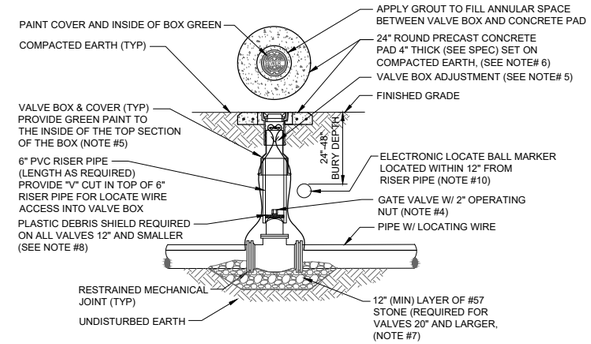

NOTES:

1. FOR UNPAVED LOCATIONS, A PRECAST CONCRETE VALVE PAD SHALL BE PROVIDED AND INSTALLED FLUSH WITH GRADE. CONCRETE PAD IS NOT REQUIRED FOR VALVE LOCATED IN THE ROADWAY, UNLESS SHOWN OR NOTED OTHERWISE.
2. LOCATING WIRE IS REQUIRED ON ALL PRESSURE PIPING (SEE DETAIL S-49).
3. A "V" CUT SHALL BE CARVED IN THE CURB CLOSEST/(ASPHALT IF NO CURB) ADJACENT TO ALL BELOW GRADE VALVES. THE "V" CUT IS TO BE PAINTED GREEN.
4. IN PAVED AREAS, INSTALL VALVE AT A DEPTH TO ALLOW A 12" MIN. DISTANCE BETWEEN THE VALVE COVER PLATE AND THE TOP OF THE VALVE OPERATING NUT. OUTSIDE OF PAVED AREAS (GRASS), INSTALL VALVE AT A DEPTH TO ALLOW A 6" MINIMUM DISTANCE BETWEEN THE VALVE COVER AND THE TOP OF THE VALVE OPERATING NUT. OPERATING NUT/STEM EXTENSION SHALL BE PROVIDED (WHERE APPLICABLE) SO THAT THE OPERATING NUT WILL BE NO MORE THAN 30 INCHES BELOW FINISHED GRADE.
5. FOR NEW CONSTRUCTION, THE VALVE BOX SHALL BE ADJUSTED TO MIDRANGE TO ALLOW FOR FUTURE BOX ADJUSTMENTS. ROUTE LOCATE WIRES THRU A "V" CUT IN THE TOP OF THE 6" PVC RISER PIPE FOR LOCATE WIRE ACCESS INTO VALVE BOX. THE LOCATE WIRES WITH A 12" LONG PIG-TAIL AT THE TOP SHALL BE CONNECTED TOGETHER WITH A WIRE NUT.
6. BRASS IDENTIFICATION TAG INDICATING "SEWER", VALVE SIZE, DIRECTION AND TURNS TO OPEN & VALVE TYPE. PROVIDE A ¼" HOLE IN BRASS TAG AND ATTACH TAG (TWIST WIRE AROUND TAG) TO THE END OF THE LOCATE WIRE. TAGS ARE NOT REQUIRED ON VALVES INSTALLED ON FIRE HYDRANT BRANCH LINES.
7. IN LIEU OF PRECAST CONCRETE PAD, A 6" THICK X 24" (ROUND OR SQUARE) POURED CONCRETE PAD W/2 - #4 REBAR AROUND PERIMETER, MAY BE USED.
8. GRAVEL SHALL BE PROVIDED UNDER ALL VALVES 20" AND LARGER. THE MINIMUM VERTICAL LIMIT OF GRAVEL IS 12" UNDER THE VALVE UP TO ⅓ THE OVERALL HEIGHT OF THE VALVE.
9. FOR VALVES 12 INCH AND SMALLER, PROVIDE A WHITE OR BLACK PLASTIC DEBRIS SHIELD WHICH INSTALLS BELOW THE OPERATING NUT. THIS SHIELD SHALL CENTER THE RISER PIPE BOX OVER THE OPERATING NUT AND MINIMIZE INFILTRATION. SHIELD SHALL BE BY AFC, BOXLOK OR APPROVED EQUAL.
10. ALL VALVES SHALL BE INSTALLED WITH AN ELECTRIC LOCATE MARKER. MARKER SHALL BE 4" DIA. COLOR CODED BALL MARKER (3M-1404XR FOR SEWER).

SEWER VALVE DETAIL

JANUARY 2016 PLATE S-30

NOTE:
ANGLE BETWEEN INFLUENT FORCE MAIN AND GRAVITY EFFLUENT PIPE SHALL BE BETWEEN 135° - 225° UNLESS APPROVED OTHERWISE BY JEA.

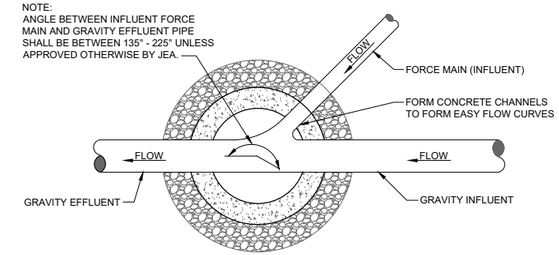

PLAN

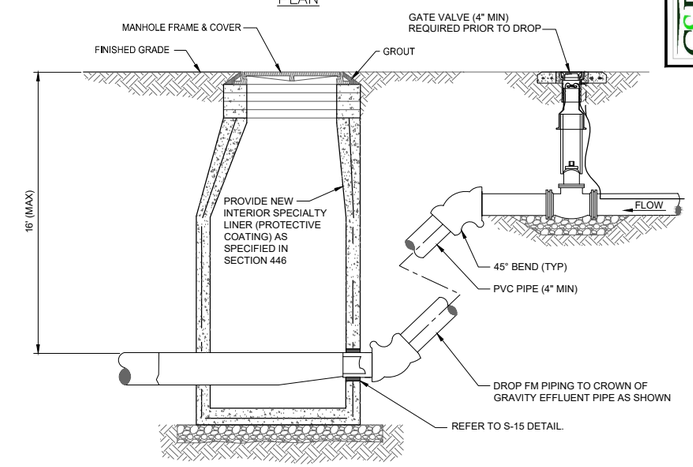

SECTION

MODIFIED TYPICAL FORCE MAIN CONNECTION TO MANHOLE

JANUARY 2016 PLATE S-18

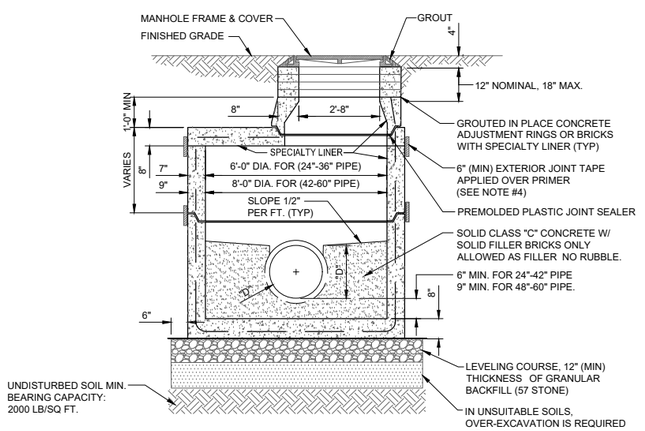

SECTION VIEW

NOTES:

1. PRECAST MANHOLE SECTIONS TO BE MANUFACTURED IN ACCORDANCE WITH THE LATEST EDITIONS OF A.S.T.M. C-478 WITH 4000 LB. CONC., TYPE II CEMENT. ALL LIFTING HOLES AND OUTSIDE INSERTS SHALL BE FILLED WITH NON-SHRINK GROUT AND COATED WITH BITUMINOUS WATERPROOFING MATERIAL.
2. THE EXTERIOR ONLY OF MANHOLE SHALL BE GIVEN TWO COATS OF BITUMINOUS WATERPROOFING MATERIAL.
3. SPECIALTY LINER IS TO BE INSTALLED ON INSIDE SURFACE OF MANHOLE IN ACCORDANCE WITH AS-602, THEREFORE, THE BITUMINOUS WATERPROOFING SHALL BE OMITTED ON INSIDE.
4. ALL M/H JOINTS BELOW THE TOP CONE SECTION SHALL INCLUDE A 6" WIDE (MIN) EXTERIOR JOINT TAPE (W/PRIMER). TAPE ON THE CONE SECTION IS OPTIONAL.
5. IN SILTS, CLAY OR HIGHLY ORGANIC SOILS (FINE-GRAINED SOILS INCLUDING SOIL GROUPS ML, CL, OL, MH, CH, OH AND PT) THE SOILS SHALL BE OVER-EXCAVATED AN ADDITIONAL 24" (AT A MIN.) AND BACKFILLED WITH AASHTO CLASS A-3 SOIL (COMPACTED TO 98%, ASTM D1557) OR OVER-EXCAVATE AN ADDITIONAL 12" (AT A MIN.) AND BACKFILL WITH GRANULAR BACKFILL (57 STONE).

SANITARY SEWER TYPE "G" MANHOLE 24" - 60" SEWERS

JANUARY 2018 PLATE S-11

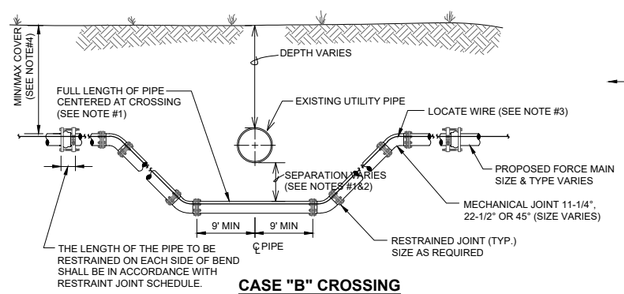

CASE "B" CROSSING

NOTES:

1. IF EXISTING CONFLICT PIPE IS A WATER OR RECLAIMED WATER MAIN, 12-INCHES OF SEPARATION IS REQUIRED.A FULL LENGTH OF PIPE SHALL BE CENTERED OVER EXISTING UTILITY MAIN TO PROVIDE MAXIMUM JOINT SPACING FOR ALL CROSSINGS.
2. FOR OTHER LOCATION LIMITATIONS SEE DETAIL (S-26 & S-27).
3. LOCATING WIRE REQUIRED: SEE DETAIL S-49.
4. THE COVER FOR PIPING LESS THAN 24" SIZE SHALL BE 30" (MIN) IN UNPAVED AREAS, 36" (MIN) IN PAVED AREAS AND A MAXIMUM COVER OF 60", UNLESS PRE-APPROVED BY JEA. THE COVER FOR PIPING 24" SIZE AND LARGER SHALL BE 36" (MIN) IN PAVED AND UNPAVED AREAS AND A MAXIMUM COVER OF 84", UNLESS APPROVED BY JEA.
5. THE SOILS BETWEEN THE MAIN AND THE CONFLICT PIPE SHALL BE COMPACTED TO 98% OF THE MAXIMUM DENSITY AS DETERMINED BY THE LABORATORY MODIFIED PROCTOR TEST ASTM D 1557.

ADJUSTMENT UNDER EXISTING UTILITIES MECHANICAL RESTRAINTS

JANUARY 2018 PLATE S-41

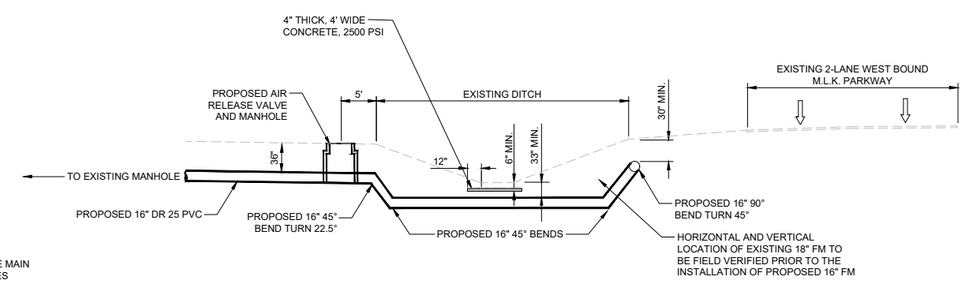

SECTION A-A PROPOSED 16" FORCE MAIN UNDER THE EXISTING DITCH

SCALE: 1" = 10'

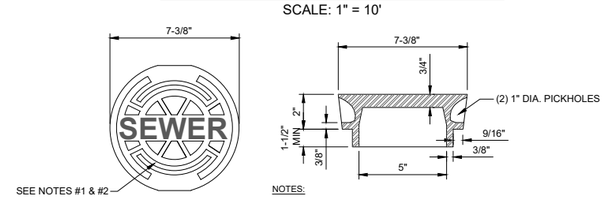

HEAVY DUTY RATING

NOTES:

1. PAINT TOP OF THE COVER WITH ENAMEL PAINT (GREEN COLOR).
2. LID WEIGHT: APPROX. 12 LBS.

SEWER SYSTEM VALVE BOX COVER

JANUARY 2016 PLATE S-31

Construction & Engineering Services Consultants, Inc.
9428 Baymeadows Road, Suite 1/0
Jacksonville, FL 32256
Telephone: 904-645-1825
Business Number CA 27598
C&ES CONSULTANTS, INC.

APPROVED
2018-11-291-214
Joshua McKinney
6/14/2018

NO.	BY	DATE	REVISIONS
6.			
5.			
4.			
3.			
2.			
1.			

DESIGN ENGINEER
CLARO N. MAGPANTAY, P.E.
FLORIDA REGISTRATION NO. 60164

DESIGNER: MAGPANTAY
DRAWN BY: PAGE
DATE: APR. 2018
CHECKED BY: GBAY
DATE: APR. 2018

JEA Building Community

KINLOCK PUMP STATION
FORCE MAIN UPGRADE
SANITARY SEWER FORCE MAIN DETAILS

PROJ. NO. 17016
DATE: APR. 2018
SCALE: NONE

NO. SHEETS 13
SHEET NO. 8
DRAWING NO. C-8

Z:\Projects\17016 JEA MCMillian-Kinlock PS Force Mains\dwg\Details.dwg Current Layout Tab = Details Fri Apr 27, 2018 - 08:31

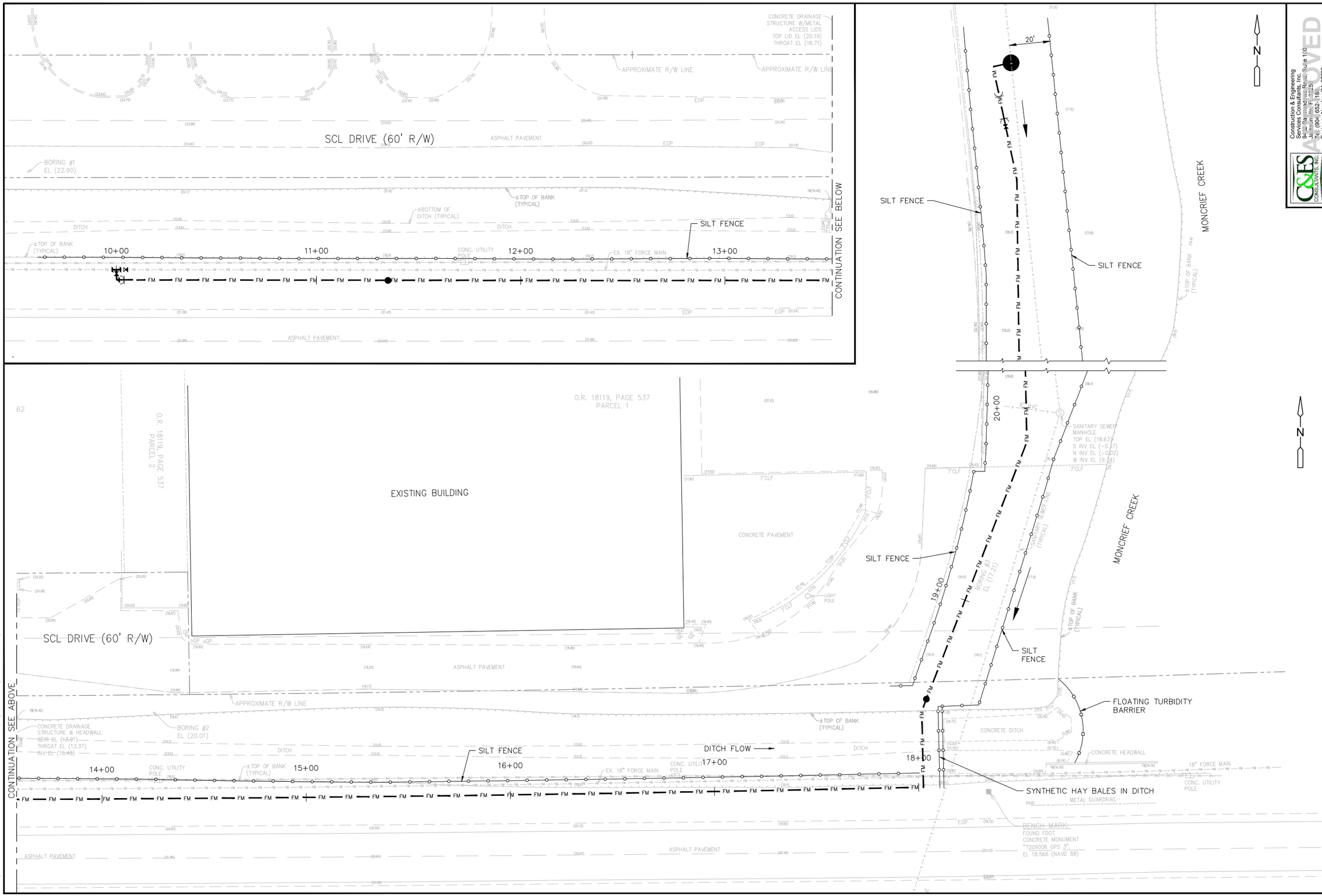

Z:\Projects\17016 JEA MCMillan-Kinlock PS Force Mains\dwg\Details.dwg Current Layout Tab = Erosion Plan Fri Apr 27, 2018 - 10:12

APPROVED
6/14/2018

Construction & Engineering Services Consultants, Inc.
9432 Baymeadows Road, Suite 1/0
Jacksonville, FL 32256
Telephone 904-645-1525
Business Number CA 27598
C&ES CONSULTANTS, INC.

NO.	BY	DATE	REVISIONS
6.			
5.			
4.			
3.			
2.			
1.			

DESIGN ENGINEER
CLARO N. MAGPANTAY, P.E.
FLORIDA REGISTRATION NO. 60164

DESIGNER: MAGPANTAY
DRAWN BY: PAGE
DATE: APR. 2018
CHECKED BY: GBAY
DATE: APR. 2018

JEA Building Community

KINLOCK PUMP STATION FORCE MAIN UPGRADE EROSION & SEDIMENT CONTROL PLAN

PROJ. NO. 17016
DATE: APR. 2018
SCALE: 1" = 20'

NO. SHEETS 13
SHEET NO. 9
DRAWING NO. C9

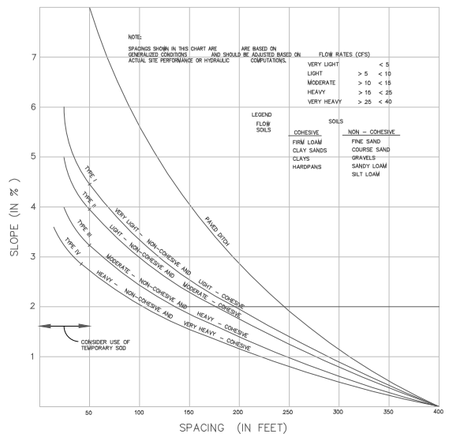

CHART I

RECOMMENDED SPACING FOR TYPE I AND TYPE II HAY BALE BARRIERS, AND TYPE III AND TYPE IV SILT FENCES AND PAVED DITCH HAY BALE BARRIERS

SPACING RECOMMENDATION FOR SILT FENCES & HAY BALES

(D–906)
N.T.S.

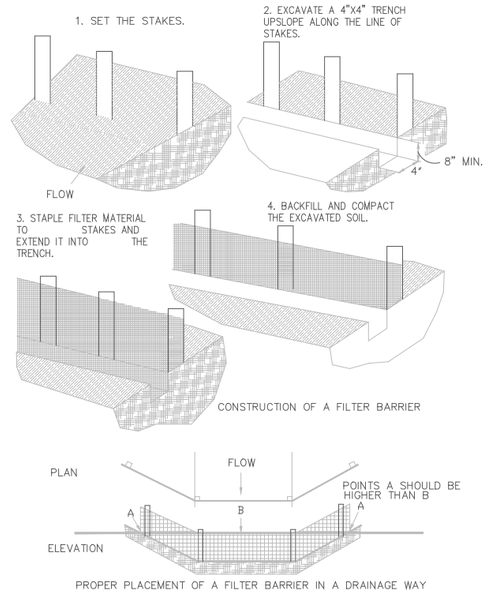

FILTER BARRIER CONSTRUCTION DETAIL

(D–910)
N.T.S.

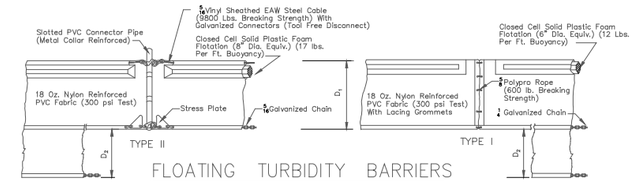

FLOATING TURBIDITY BARRIERS

NOTICE:
COMPONENTS OF TYPES I & TYPE II MAY BE SIMILAR OR IDENTICAL TO PROPRIETARY DESIGNS. ANY INFRINGEMENT ON THE PROPRIETARY RIGHTS OF THE DESIGNER SHALL BE THE SOLE RESPONSIBILITY OF THE USER. SUBSTITUTIONS FOR TYPES I AND II SHALL BE AS APPROVED BY THE ENGINEER.

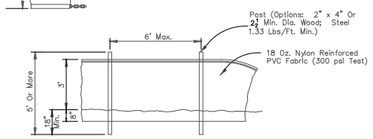

STAKED TURBIDITY BARRIER

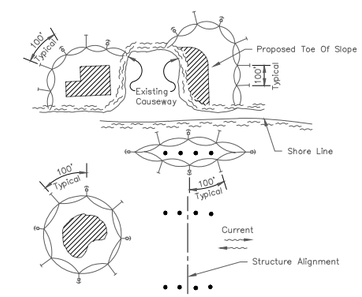

LEGEND
- Pile Locations
- Dredge Or Fill Area
- Mooring Buoy w/Anchor
- Anchor
- Barrier Movement Due To Current Action

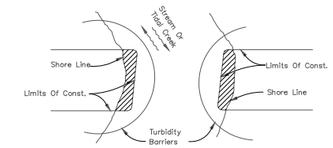

Note:
Turbidity barriers for flowing streams and tidal creeks may be either floating, or staked types or any combinations of types that will suit site conditions and meet erosion control and water quality requirements. The barrier type(s) will be at the Contractors option unless otherwise specified in the plans, however payment will be under the contract lump sum price established in the bid proposal for Erosion & Sediment Control Posts in staked turbidity barriers to be installed in vertical position unless otherwise directed by the Engineer.

NOTES:
1. Turbidity barriers are to be used in all permanent bodies of water regardless of water depth.
2. Number and spacing of anchors dependent on current velocities.
3. Deployment of barrier around pile locations may vary to accommodate construction operations.
4. Navigation may require segmenting barrier during construction operations.
5. For additional information see Section 104 of the FDOT Standard Specifications.

TURBIDITY BARRIER APPLICATIONS

TURBIDITY BARRIERS

(D–907)
N.T.S.

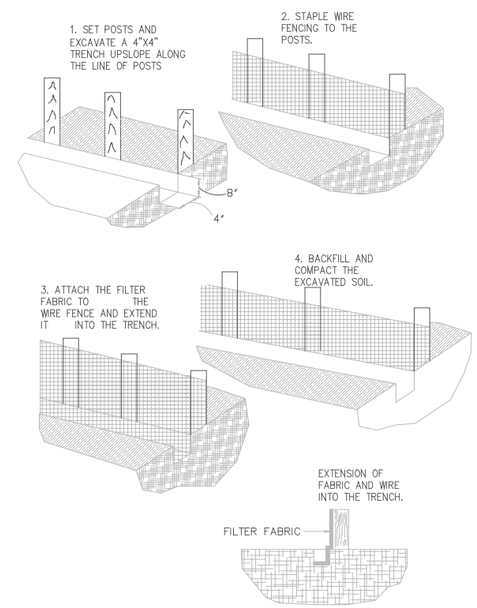

CONSTRUCTION DETAILS FOR SILT FENCES

(D–909)

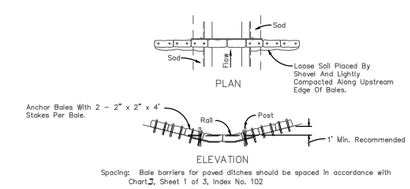

BARRIER FOR PAVED DITCH

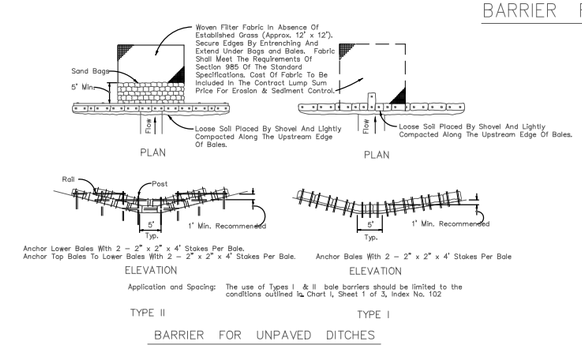

BARRIER FOR UNPAVED DITCHES

HAY BALE BARRIERS TYPE I & II

(D–912)
N.T.S.

APPROVED
6/14/2018

Construction & Engineering Services Consultants, Inc.
9432 Baymeadows Road, Suite 110
Jacksonville, FL 32256
Telephone: 904-739-4555
Business Number CA 27598
C&ES CONSULTANTS, INC.

NO.	BY	DATE	REVISIONS
6.			
5.			
4.			
3.			
2.			
1.			

DESIGN ENGINEER
CLARO N. MAGPANTAY, P.E.
FLORIDA REGISTRATION NO. 60164

DESIGNER: MAGPANTAY
DRAWN BY: PAGE
DATE: APR. 2018
CHECKED BY: GRAY
DATE: APR. 2018

JEA Building Community

KINLOCK PUMP STATION
FORCE MAIN UPGRADE
STORMWATER POLLUTION PREVENTION DETAILS

PROJ. NO. 17016
DATE: APR. 2018
SCALE: NONE

NO. SHEETS 13
SHEET NO. 10
DRAWING NO. C-10

Z:\Projects\17016 JEA MCMillian-Kinlock PS Force Mains\dwg\MOT Erosion.dwg Current Layout Tab = SWPPP Details Thu Apr 26, 2018 – 08:30

OWNER'S REQUIREMENTS

SITE DESCRIPTION

PROJECT NAME AND LOCATION:

KINLOCK PUMP STATION
FORCE MAIN UPGRADE

OWNER NAME AND ADDRESS:

JEA
21 WEST CHURCH STREET
JACKSONVILLE, FL 32202

DESCRIPTION:

CONSTRUCTION OF NEW 16" FORCE MAIN

SOIL DISTURBING ACTIVITIES WILL INCLUDE:
CLEARING AND GRUBBING; GRADING;
PREPARATION FOR FINAL PLANTING AND SEEDING.

RUNOFF CURVE NUMBER:
1. PRE-CONSTRUCTION = N/A
2. DURING CONSTRUCTION = N/A
3. POST-CONSTRUCTION = N/A

SOILS:
SEE SOIL BORING REPORT FOR SOILS DATA

SITE MAPS:
* INSTALLATION OF APPROXIMATELY 1000 L.F. OF 16" DR 25 PVC FORCEMAIN(250' TO EXISTING MANHOLE LOCATED NORTH OF MLK PARKWAY R.O.W. AND 800' WEST TO THE POINT OF CONNECTION TO EXISTING 18" FORCE MAIN) AND APPROXIMATELY 4300 L.F. OF EXISTING 18" DIP TO BE ABANDONED FROM CONNECTION OF 16" PVC TO EXISTING JUNCTION CHAMBER ON W. 13th STREET (WEST OF FAIRFAX STREET).
* SEE ATTACHED EROSION & TURBIDITY CONTROL PLAN FOR LOCATION OF TEMPORARY STABILIZATION PRACTICES, AND TURBIDITY BARRIERS
* SEE GENERAL NOTES FOR REQUIREMENTS FOR TEMPORARY AND PERMANENT STABILIZATION.

SITE AREA:
TOTAL PRE DEVELOPMENT AREA = ACRES
TOTAL POST DEVELOPMENT AREA = ACRES

CONTROLS

THIS PLAN UTILIZES BEST MANAGEMENT PRACTICES TO CONTROL EROSION AND TURBIDITY CAUSED BY STORM WATER RUN OFF. AN EROSION AND TURBIDITY PLAN HAS BEEN PREPARED TO INSTRUCT THE CONTRACTOR ON PLACEMENT OF THESE CONTROLS. IT IS THE CONTRACTORS RESPONSIBILITY TO INSTALL AND MAINTAIN THE CONTROLS PER PLAN AS WELL AS ENSURING THE PLAN IS PROVIDING THE PROPER PROTECTION AS REQUIRED BY FEDERAL, STATE AND LOCAL LAWS. REFER TO "CONTRACTORS RESPONSIBILITY" FOR A VERBAL DESCRIPTION OF THE CONTROLS THAT MAY BE IMPLEMENTED.

STORM WATER MANAGEMENT

STORM WATER DRAINAGE WILL BE PROVIDED BY (DESCRIPTION:) _____ DRY DETENTION BASIN_____
FOR THE PROJECT. AREAS WHICH ARE NOT TO BE CONSTRUCTED ON, BUT WILL BE REGRADED SHALL BE STABILIZED IMMEDIATELY AFTER GRADING IS COMPLETE, WHEN CONSTRUCTION IS COMPLETE, A TOTAL OF 2.2± ACRES WILL HAVE BEEN REGRADED, 0 ACRES LEFT UNDISTURBED. THE SITE DISCHARGES TO A DRY DETENTION SYSTEM. WHERE PRACTICAL, TEMPORARY SEDIMENT BASINS WILL BE USED TO INTERCEPT SEDIMENT BEFORE ENTERING THE PERMANENT DETENTION BASIN. THE DRY DETENTION SYSTEM IS DESIGNED WITH A 72 HOUR RECOVERY TIME CRITERIA. THIS IS IN ACCORDANCE WITH THE REQUIREMENTS SET FORTH BY THE ST. JOHNS RIVER WATER MANAGEMENT DISTRICT FOR THIS TYPE OF DEVELOPMENT AT THE TIME OF PERMITTING.

TIMING OF CONTROLS/MEASURES

REFER TO " CONTRACTORS RESPONSIBILITY" FOR THE TIMING OF CONTROL/MEASURES.

CERTIFICATION OF COMPLIANCE WITH FEDERAL, STATE AND LOCAL REGULATIONS

IN ACCORDANCE WITH FEDERAL, STATE AND LOCAL LAWS RELATED TO STORM WATER MANAGEMENT AND EROSION AND TURBIDITY CONTROLS, THE FOLLOWING PERMITS HAVE BEEN OBTAINED.

D.E.R. DREDGE/FILL PERMIT # N/A
C.O.E. DREDGE/FILL PERMIT # N/A
S.J.R.W.M.D. M.S.S.W. PERMIT # N/A

POLLUTION PREVENTION PLAN CERTIFICATION

I CERTIFY UNDER PENALTY OF LAW THAT THIS DOCUMENT AND ALL ATTACHMENTS WERE PREPARED UNDER MY DIRECTION OR SUPERVISION IN ACCORDANCE WITH A SYSTEM DESIGNED TO ASSURE THAT QUALIFIED PERSONNEL PROPERLY GATHERED AND EVALUATED THE INFORMATION SUBMITTED. BASED ON MY INQUIRY OF THE PERSON OR PERSONS WHO MANAGE THE SYSTEM, OR THOSE PERSONS DIRECTLY RESPONSIBLE FOR GATHERING THE INFORMATION, THE INFORMATION SUBMITTED IS, TO THE BEST OF MY KNOWLEDGE AND BELIEF, TRUE, ACCURATE, AND COMPLETE. I AM AWARE THAT THERE ARE SIGNIFICANT PENALTIES FOR SUBMITTING FALSE INFORMATION, INCLUDING THE POSSIBILITY OF FINE AND IMPRISONMENT FOR KNOWING VIOLATIONS.

SIGNED: _____

DATED: _____

CONTRACTOR'S REQUIREMENTS

GENERAL

THE CONTRACTOR SHALL AT A MINIMUM IMPLEMENT THE CONTRACTOR'S REQUIREMENTS OUTLINED BELOW AND THOSE MEASURES SHOWN ON THE EROSION AND TURBIDITY CONTROL PLAN. IN ADDITION THE CONTRACTOR SHALL UNDERTAKE ADDITIONAL MEASURES REQUIRED TO BE IN COMPLIANCE WITH APPLICABLE PERMIT CONDITIONS AND STATE WATER QUALITY STANDARDS. DEPENDING ON THE NATURE OF MATERIALS AND METHODS OF CONSTRUCTION THE CONTRACTOR MAY BE REQUIRED TO ADD FLOCCULANTS TO THE RETENTION SYSTEM PRIOR TO PLACING THE SYSTEM INTO OPERATION.

SEQUENCE OF MAJOR ACTIVITIES:

THE ORDER OF ACTIVITIES WILL BE AS FOLLOWS:

1. INSTALL STABILIZED CONSTRUCTION ENTRANCE
2. INSTALL SILT FENCES AND HAY BALES AS REQUIRED
3. CLEAR AND GRUB FOR DIVERSION SWALES/DIKES AND SEDIMENT BASIN
4. CONSTRUCT SEDIMENTATION BASIN
5. CONTINUE CLEARING AND GRUBBING
6. STOCK PILE TOP SOIL IF REQUIRED
7. PERFORM PRELIMINARY GRADING ON SITE AS REQUIRED
8. STABILIZE DENUDED AREAS AND STOCKPILES AS SOON AS PRACTICABLE
9. INSTALL UTILITIES, STORM SEWER, CURBS & GUTTER.
10. APPLY BASE TO PROJECT
11. COMPLETE GRADING AND INSTALL PERMANENT SEEDING/SOD AND PLANTING
12. COMPLETE FINAL PAVING
13. REMOVE ACCUMULATED SEDIMENT FROM BASINS
14. WHEN ALL CONSTRUCTION ACTIVITY IS COMPLETE AND THE SITE IS STABILIZED; REMOVE ANY TEMPORARY DIVERSION SWALES/DIKES AND RESEED/SOD AS REQUIRED

TIMING OF CONTROLS/MEASURES

AS INDICATED IN THE SEQUENCE OF MAJOR ACTIVITIES, THE SILT FENCES AND SYNTHETIC HAY BALES, STABILIZED CONSTRUCTION ENTRANCE AND SEDIMENT BASIN WILL BE CONSTRUCTED PRIOR TO CLEARING OR GRADING OF ANY OTHER PORTIONS OF THE SITE. STABILIZATION MEASURES SHALL BE INITIATED AS SOON AS PRACTICAL IN PORTIONS OF THE SITE WHERE CONSTRUCTION ACTIVITIES HAVE TEMPORARILY OR PERMANENTLY CEASED. ONCE CONSTRUCTION ACTIVITY CEASES PERMANENTLY IN AN AREA, THAT AREA WILL BE STABILIZED PERMANENTLY IN ACCORDANCE WITH THE PLANS. AFTER THE ENTIRE SITE IS STABILIZED, THE ACCUMULATED SEDIMENT WILL BE REMOVED FROM THE SEDIMENT TRAPS AND THE EARTH DIKE/SWALES WILL BE REGRADED/REMOVED AND STABILIZED IN ACCORDANCE WITH THE EROSION & TURBIDITY CONTROL PLAN.

CONTROLS

IT IS THE CONTRACTORS RESPONSIBILITY TO IMPLEMENT THE EROSION AND TURBIDITY CONTROLS AS SHOWN ON THE EROSION AND TURBIDITY CONTROL PLAN. IT IS ALSO THE CONTRACTORS RESPONSIBILITY TO ENSURE THESE CONTROLS ARE PROPERLY INSTALLED , MAINTAINED AND FUNCTIONING PROPERLY TO PREVENT TURBID OR POLLUTED WATER FROM LEAVING THE PROJECT SITE. THE CONTRACTOR WILL ADJUST THE EROSION AND TURBIDITY CONTROLS SHOWN ON THE EROSION AND TURBIDITY CONTROL PLAN AND ADD ADDITIONAL CONTROL MEASURES, AS REQUIRED,TO ENSURE THE SITE MEETS ALL FEDERAL, STATE AND LOCAL EROSION AND TURBIDITY CONTROL REQUIREMENTS. THE FOLLOWING BEST MANAGEMENT PRACTICES WILL BE IMPLEMENTED BY THE CONTRACTOR AS REQUIRED BY THE EROSION AND TURBIDITY CONTROL PLAN AND AS REQUIRED TO MEET THE EROSION AND TURBIDITY REQUIREMENTS IMPOSED ON THE PROJECT SITE BY THE REGULATORY AGENCIES.

EROSION AND SEDIMENT CONTROLS
STABILIZATION PRACTICES

1. HAY BALE BARRIER: HAY BALE BARRIERS CAN BE USED BELOW DISTURBED AREAS SUBJECT TO SHEET AND RILL EROSION WITH THE FOLLOWING LIMITATIONS:
   A. WHERE THE MAXIMUM SLOPE BEHIND THE BARRIER IS 33 PERCENT.
   B. IN MINOR SWALES OR DITCH LINES WHERE THE MAXIMUM CONTRIBUTING DRAINAGE AREA IS NO GREATER THAN 2 ACRES.
   C. WHERE EFFECTIVENESS IS REQUIRED FOR LESS THAN 3 MONTHS.
   D. EVERY EFFORT SHOULD BE MADE TO LIMIT THE USE OF STRAW BALE BARRIERS CONSTRUCTED IN LIVE STREAMS OR IN SWALES WHERE THERE IS THE POSSIBILITY OF A WASHOUT. IF NECESSARY, MEASURES SHALL BE TAKEN TO PROPERLY ANCHOR BALES TO INSURE AGAINST WASHOUT.

   REFER TO CITY STANDARD DETAIL D-913 FOR CONSTRUCTING THE HAY BALE BARRIER. ALSO REFER TO D-901, D-911 AND D-12 FOR PROPER LOCATION, MATERIAL & USAGE.
2. FILTER FABRIC BARRIER: FILTER FABRIC BARRIERS CAN BE USED BELOW DISTURBED AREAS SUBJECT TO SHEET AND RILL EROSION WITH THE FOLLOWING LIMITATIONS:
   A. WHERE THE MAXIMUM SLOPE BEHIND THE BARRIER IS 33 PERCENT.
   B. IN MINOR SWALES OR DITCH LINES WHERE THE MAXIMUM CONTRIBUTING DRAINAGE AREA IS NO GREATER THAN 2 ACRES.

   REFER TO CITY STANDARD DETAIL D-910 FOR PROPER CONSTRUCTION OF THE FILTER FABRIC BARRIER.
3. BRUSH BARRIER WITH FILTER FABRIC: BRUSH BARRIER MAY BE USED BELOW DISTURBED AREAS SUBJECT TO SHEET AND RILL EROSION WHERE ENOUGH RESIDUE MATERIAL IS AVAILABLE ON SITE.
4. LEVEL SPREADER: A LEVEL SPREADER MAY BE USED WHERE SEDIMENT-FREE STORM RUNOFF IS INTERCEPTED AND DIVERTED AWAY FROM THE GRADED AREAS ONTO UNDISTURBED STABILIZED AREAS. THIS PRACTICE APPLIES ONLY IN THOSE SITUATIONS WHERE THE SPREADER CAN BE CONSTRUCTED ON UNDISTURBED SOIL AND THE AREA BELOW THE LEVEL LIP IS STABILIZED. THE WATER SHOULD NOT BE ALLOWED TO RECONCENTRATE AFTER RELEASE. LEVEL SPREADER SHALL BE CONSTRUCTED IN ACCORDANCE TO CITY STANDARD DETAIL D-914.
5. STOCKPILING MATERIAL: NO EXCAVATED MATERIAL SHALL BE STOCKPILED IN SUCH A MANNER AS TO DIRECT RUNOFF DIRECTLY OFF THE PROJECT SITE INTO ANY ADJACENT WATER BODY OR STORM WATER COLLECTION FACILITY.
6. EXPOSED AREA LIMITATION: THE SURFACE AREA OF OPEN, RAW ERODEABLE SOIL EXPOSED BY CLEARING AND GRUBBING OPERATIONS OR EXCAVATION AND FILLING OPERATIONS SHALL NOT EXCEED 10 ACRES. THIS REQUIREMENT MAY BE WAIVED FOR LARGE PROJECTS WITH AN EROSION CONTROL PLAN WHICH DEMONSTRATES THAT OPENING OF ADDITIONAL AREAS WILL NOT SIGNIFICANTLY AFFECT OFF-SITE DEPOSIT OF SEDIMENTS.
7. INLET PROTECTION: INLETS AND CATCH BASINS WHICH DISCHARGE DIRECTLY OFF-SITE SHALL BE PROTECTED FROM SEDIMENT-LADEN STORM RUNOFF UNTIL THE COMPLETION OF ALL CONSTRUCTION OPERATIONS THAT MAY CONTRIBUTE SEDIMENT TO THE INLET.
8. TEMPORARY SEEDING: AREAS OPENED BY CONSTRUCTION OPERATIONS AND THAT ARE NOT ANTICIPATED TO BE RE-EXCAVATED OR DRESSED AND RECEIVE FINAL GRASSING TREATMENT WITHIN 30 DAYS SHALL BE SEEDED WITH A QUICK GROWING GRASS SPECIES WHICH WILL PROVIDE AN EARLY COVER DURING THE SEASON IN WHICH IT IS PLANTED AND WILL NOT LATER COMPETE WITH THE PERMANENT GRASSING.
9. TEMPORARY SEEDING AND MULCHING: SLOPES STEEPER THAN 6:1 THAT FALL WITHIN THE CATEGORY ESTABLISHED IN PARAGRAPH 8 ABOVE SHALL ADDITIONALLY RECEIVE MULCHING OF APPROXIMATELY 2 INCHES LOOSE MEASURE OF MULCH MATERIAL CUT INTO THE SOIL OF THE SEEDED AREA ADEQUATE TO PREVENT MOVEMENT OF SEED AND MULCH.
10. TEMPORARY GRASSING: THE SEEDED OR SEEDED AND MULCHED AREA(S) SHALL BE ROLLED AND WATERED OR HYDROMULCHED OR OTHER SUITABLE METHODS IF REQUIRED TO ASSURE OPTIMUM GROWING CONDITIONS FOR THE ESTABLISHMENT OF A GOOD GRASS COVER. TEMPORARY GRASSING SHALL BE THE SAME MIX & AMOUNT REQUIRED FOR PERMANENT GRASSING IN THE CONTRACT SPECIFICATIONS.
11. TEMPORARY REGRASSING : IF, AFTER 14 DAYS FROM SEEDING, THE TEMPORARY GRASSED AREAS HAVE NOT ATTAINED A MINIMUM OF 75 PERCENT GOOD GRASS COVER, THE AREA WILL BE REWORKED AND ADDITIONAL SEED APPLIED SUFFICIENT TO ESTABLISH THE DESIRED VEGETATIVE COVER.
12. MAINTENANCE: ALL FEATURES OF THE PROJECT DESIGNED AND CONSTRUCTED TO PREVENT EROSION AND SEDIMENT SHALL BE MAINTAINED DURING THE LIFE OF THE CONSTRUCTION SO AS TO FUNCTION AS THEY WERE ORIGINALLY DESIGNED AND CONSTRUCTED.
13. PERMANENT EROSION CONTROL: THE EROSION CONTROL FACILITIES OF THE PROJECT SHOULD BE DESIGNED TO MINIMIZE THE IMPACT ON THE OFFSITE FACILITIES.
14. PERMANENT SEEDING: ALL AREAS WHICH HAVE BEEN DISTURBED BY CONSTRUCTION WILL, AS A MINIMUM, BE SEEDED. THE SEEDING MIX MUST PROVIDE BOTH LONG-TERM VEGETATION AND RAPID GROWTH SEASONAL VEGETATION. SLOPES STEEPER THAN 4:1 SHALL BE SEEDED AND MULCHED OR SODDED.

STRUCTURAL PRACTICES

1. TEMPORARY DIVERSION DIKE: TEMPORARY DIVERSION DIKES MAY BE USED TO DIVERT RUNOFF THROUGH A SEDIMENT-TRAPPING FACILITY. AND IT SHALL BE CONSTRUCTED IN ACCORDANCE TO D-914.
2. TEMPORARY SEDIMENT TRAP: A SEDIMENT TRAP SHALL BE INSTALLED IN AN DRAINAGEWAY AT A STORM DRAIN INLET OR AT OTHER POINTS OF DISCHARGE FROM A DISTURBED AREA.
   THE FOLLOWING SEDIMENT TRAPS MAY BE CONSTRUCTED EITHER INDEPENDENTLY OR IN CONJUNCTION WITH A TEMPORARY DIVERSION DIKE:
   A. BLOCK & GRAVEL SEDIMENT FILTER – THIS PROTECTION IS APPLICABLE WHERE HEAVY FLOWS AND/OR WHERE AN OVERFLOW CAPACITY IS NECESSARY TO PREVENT EXCESSIVE PONDING AROUND THE STRUCTURE. REFER TO D-902 FOR CONSTRUCTION OF A CURB INLET SEDIMENT FILTER, AND D-904 FOR CONSTRUCTION OF A DROP INLET SEDIMENT FILTER.
   B. GRAVEL SEDIMENT TRAP – THIS PROTECTION IS APPLICABLE WHERE HEAVY CONCENTRATED FLOWS ARE EXPECTED, BUT NOT WHERE PONDING AROUND THE STRUCTURE MIGHT CAUSE EXCESSIVE INCONVENIENCE OR DAMAGE TO ADJACENT STRUCTURES & UNPROTECTED AREAS. REFER TO D-903 FOR CONSTRUCTION OF CURB INLET & DROP SEDIMENT TRAP.
   C. DROP INLET SEDIMENT TRAP – THIS PROTECTION IS APPLICABLE WHERE THE INLET DRAINS A RELATIVELY FLAT AREA (S < 5%) AND WHERE SHEET OR OVERLAND FLOWS (Q < 0.5 CFS) ARE TYPICAL. THIS METHOD SHALL NOT APPLY TO INLETS RECEIVING CONCENTRATED FLOWS SUCH AS IN STREET OR HIGHWAY MEDIANS. REFER TO D-905 FOR CONSTRUCTION OF HAY BALE & FABRIC SEDIMENT FILTER.
3. OUTLET PROTECTION: APPLICABLE TO THE OUTLETS OF ALL PIPES AND PAVED CHANNEL SECTIONS WHERE THE FLOW COULD CAUSE EROSION & SEDIMENT PROBLEM TO THE RECEIVING WATER BODY. SILT FENCES & HAY BALES ARE TO BE INSTALLED IMMEDIATELY DOWNSTREAM OF THE DISCHARGING STRUCTURE AS SHOWN ON THE OUTLET PROTECTION DETAIL.
4. SEDIMENT BASIN: WILL BE CONSTRUCTED AT THE COMMON DRAINAGE LOCATIONS THAT SERVE AN AREA WITH 10 OR MORE DISTURBED ACRES AT ONE TIME, THE PROPOSED STORM WATER PONDS (OR TEMPORARY PONDS) WILL BE CONSTRUCTED FOR USE AS SEDIMENT BASINS. THESE SEDIMENT BASINS MUST PROVIDE A MINIMUM OF 3,600 CUBIC FEET OF STORAGE PER ACRE DRAINED UNTIL FINAL STABILIZATION OF THE SITE. THE 3,600 CUBIC FEET OF STORAGE AREA PER ACRE DRAINED DOES NOT APPLY TO FLOWS FROM OFFSITE AREAS AND FLOWS FROM ONSITE AREAS THAT ARE EITHER UNDISTURBED OR HAVE UNDERGONE FINAL STABILIZATION WHERE SUCH FLOWS ARE DIVERTED AROUND BOTH THE DISTURBED AREA AND THE SEDIMENT BASIN. ANY TEMPORARY SEDIMENT BASINS CONSTRUCTED MUST BE BACKFILLED AND COMPACTED IN ACCORDANCE WITH THE SPECIFICATIONS FOR STRUCTURAL FILL. ALL SEDIMENT COLLECTED IN PERMANENT OR TEMPORARY SEDIMENT TRAPS MUST BE REMOVED UPON FINAL STABILIZATION.

OTHER CONTROLS

WASTE DISPOSAL

WASTE MATERIALS

ALL WASTE MATERIALS EXCEPT LAND CLEARING DEBRIS SHALL BE COLLECTED AND STORED IN A SECURELY LIDDED METAL DUMPSTER. THE DUMPSTER WILL MEET ALL LOCAL AND STATE SOLID WASTE MANAGEMENT REGULATIONS. THE DUMPSTER WILL BE EMPTIED AS NEEDED AND THE TRASH WILL BE HAULED TO A STATE APPROVED LANDFILL. ALL PERSONNEL WILL BE INSTRUCTED REGARDING THE CORRECT PROCEDURE FOR WASTE DISPOSAL. NOTICES STATING THESE PRACTICES WILL BE POSTED AT THE CONSTRUCTION SITE BY THE CONSTRUCTION SUPERINTENDENT, THE INDIVIDUAL WHO MANAGES THE DAY-TO-DAY SITE OPERATIONS, WILL BE RESPONSIBLE FOR SEEING THAT THESE PROCEDURES ARE FOLLOWED.

HAZARDOUS WASTE

ALL HAZARDOUS WASTE MATERIALS WILL BE DISPOSED OF IN THE MANNER SPECIFIED BY LOCAL OR STATE REGULATION OR BY THE MANUFACTURER. SITE PERSONNEL WILL BE INSTRUCTED IN THESE PRACTICES AND THE SITE SUPERINTENDENT, THE INDIVIDUAL WHO MANAGES DAY-TO-DAY SITE OPERATIONS,WILL BE RESPONSIBLE FOR SEEING THAT THESE PRACTICES ARE FOLLOWED.

SANITARY WASTE

ALL SANITARY WASTE WILL BE COLLECTED FROM THE PORTABLE UNITS AS NEEDED TO PREVENT POSSIBLE SPILLAGE. THE WASTE WILL BE COLLECTED AND DEPOSED OF IN ACCORDANCE WITH STATE AND LOCAL WASTE DISPOSAL REGULATIONS FOR SANITARY SEWER OR SEPTIC SYSTEMS.

OFFSITE VEHICLE TRACKING

A STABILIZED CONSTRUCTION ENTRANCE WILL BE PROVIDED TO HELP REDUCE VEHICLE TRACKING OF SEDIMENTS. THE PAVED STREET ADJACENT TO THE SITE ENTRANCE WILL BE SWEPT DAILY TO REMOVE ANY EXCESS MUD, DIRT OR ROCK TRACKED FROM THE SITE. DUMP TRUCKS HAULING MATERIAL FROM THE CONSTRUCTION SITE WILL BE COVERED WITH A TARPAULIN.

INVENTORY FOR POLLUTION PREVENTION PLAN

THE MATERIALS OR SUBSTANCES LISTED BELOW ARE EXPECTED TO BE PRESENT ONSITE DURING CONSTRUCTION:

☐ Concrete	☐ Fertilizers	☐ Wood
☐ Asphalt	☐ Petroleum Based Products	☐ Masonry Blocks
☐ Tar	☐ Cleaning Solvents	☐ Roofing Materials
☐ Detergents	☐ Paints	☐ Metal Studs
☐ _____	☐ _____	☐ _____

SPILL PREVENTION

MATERIAL MANAGEMENT PRACTICES

THE FOLLOWING ARE THE MATERIAL MANAGEMENT PRACTICES THAT WILL BE USED TO REDUCE THE RISK OF SPILLS OR OTHER ACCIDENTAL EXPOSURE OF MATERIALS AND SUBSTANCES TO STORM WATER RUNOFF.

GOOD HOUSEKEEPING

THE FOLLOWING GOOD HOUSEKEEPING PRACTICES WILL BE FOLLOWED ONSITE DURING THE CONSTRUCTION PROJECT.

* AN EFFORT WILL BE MADE TO STORE ONLY ENOUGH PRODUCT REQUIRED TO DO THE JOB.
* ALL MATERIALS STORED ONSITE WILL BE STORED IN A NEAT, ORDERLY MANNER IN THEIR APPROPRIATE CONTAINERS AND, IF POSSIBLE, UNDER A ROOF OR OTHER ENCLOSURE.
* PRODUCTS WILL BE KEPT IN THEIR ORIGINAL CONTAINERS WITH THE ORIGINAL MANUFACTURER'S LABEL.
* SUBSTANCES WILL NOT BE MIXED WITH ONE ANOTHER UNLESS RECOMMENDED BY THE MANUFACTURER.
* WHENEVER POSSIBLE, ALL OF A PRODUCT WILL BE USED UP BEFORE DISPOSING OF THE CONTAINER.
* MANUFACTURER'S RECOMMENDATIONS FOR PROPER USE AND DISPOSAL WILL BE FOLLOWED.
* THE SITE SUPERINTENDENT WILL INSPECT DAILY TO ENSURE MATERIALS ONSITE RECEIVE PROPER USE AND DISPOSAL.

HAZARDOUS PRODUCTS

THESE PRACTICES ARE USED TO REDUCE THE RISKS ASSOCIATED WITH HAZARDOUS MATERIALS.

* PRODUCTS WILL BE KEPT IN ORIGINAL CONTAINERS UNLESS THEY ARE NOT RESEALABLE.
* ORIGINAL LABELS AND MATERIAL SAFETY DATA WILL BE RETAINED; THEY CONTAIN IMPORTANT PRODUCT INFORMATION.
* IF SURPLUS PRODUCT MUST BE DISPOSED OF, MANUFACTURER'S OR LOCAL AND STATE RECOMMENDED METHODS FOR PROPER DISPOSAL WILL BE FOLLOWED.

PRODUCT SPECIFIC PRACTICES
THE FOLLOWING PRODUCT SPECIFIC PRACTICES WILL BE FOLLOWED ONSITE:

PETROLEUM PRODUCTS

ALL ONSITE VEHICLES WILL BE MONITORED FOR LEAKS AND RECEIVE REGULAR PREVENTIVE MAINTENANCE TO REDUCE THE CHANCE OF LEAKAGE. PETROLEUM PRODUCTS WILL BE STORED IN TIGHTLY SEALED CONTAINERS WHICH ARE CLEARLY LABELED. ANY ASPHALT SUBSTANCES USED ONSITE WILL BE APPLIED ACCORDING TO THE MANUFACTURER'S RECOMMENDATIONS.

FERTILIZERS

FERTILIZERS USED WILL BE APPLIED ONLY IN THE MINIMUM AMOUNTS RECOMMENDED BY THE MANUFACTURER. ONCE APPLIED, FERTILIZER WILL BE WORKED INTO THE SOIL TO LIMIT EXPOSURE TO STORM WATER. STORAGE WILL BE IN A COVERED AREA. THE CONTENTS OF ANY PARTIALLY USED BAGS OF FERTILIZER WILL BE TRANSFERRED TO A SEALABLE PLASTIC BIN TO AVOID SPILLS.

PAINTS

ALL CONTAINERS WILL BE TIGHTLY SEALED AND STORED WHEN NOT REQUIRED FOR USE. EXCESS PAINT WILL NOT BE DISCHARGED TO THE STORM SEWER SYSTEM BUT WILL BE PROPERLY DISPOSED OF ACCORDING TO MANUFACTURERS' INSTRUCTIONS OR STATE AND LOCAL REGULATIONS.

CONCRETE TRUCKS

CONCRETE TRUCKS WILL NOT BE ALLOWED TO WASH OUT OR DISCHARGE SURPLUS CONCRETE OR DRUM WASH WATER ON THE SITE.

SPILL CONTROL PRACTICES

IN ADDITION TO THE GOOD HOUSEKEEPING AND MATERIAL MANAGEMENT PRACTICES DISCUSSED IN THE PREVIOUS SECTIONS OF THIS PLAN, THE FOLLOWING PRACTICES WILL BE FOLLOWED FOR SPILL PREVENTION AND CLEANUP:

MANUFACTURERS' RECOMMENDED METHODS FOR SPILL CLEANUP WILL BE CLEARLY POSTED ON SITE AND SITE PERSONNEL WILL BE MADE AWARE OF THE PROCEDURES AND THE LOCATION OF THE INFORMATION AND CLEANUP SUPPLIES.

MATERIALS AND EQUIPMENT NECESSARY FOR SPILL CLEANUP WILL BE KEPT IN THE MATERIAL STORAGE AREA ONSITE. EQUIPMENT AND MATERIALS WILL INCLUDE BUT NOT BE LIMITED TO BROOMS, DUST PANS, MOPS, RAGS, GLOVES, GOGGLES, LIQUID ABSORBENT (i.e. KITTY LITTER OR EQUAL), SAND, SAWDUST, AND PLASTIC AND METAL TRASH CONTAINERS SPECIFICALLY FOR THIS PURPOSE.

ALL SPILLS WILL BE CLEANED UP IMMEDIATELY AFTER DISCOVERY.

THE SPILL AREA WILL BE KEPT WELL VENTILATED AND PERSONNEL WILL WEAR APPROPRIATE PROTECTIVE CLOTHING TO PREVENT INJURY FROM CONTACT WITH A HAZARDOUS SUBSTANCE.

SPILL OF TOXIC OR HAZARDOUS MATERIAL WILL BE REPORTED TO THE APPROPRIATE STATE OR LOCAL GOVERNMENT AGENCY, REGARDLESS OF THE SIZE OF THE SPILL.

THE SPILL PREVENTION PLAN WILL BE ADJUSTED TO INCLUDE MEASURES TO PREVENT THIS TYPE OF SPILL FROM REOCCURRING AND HOW TO CLEAN UP THE SPILL IF THERE IS ANOTHER ONE. A DESCRIPTION OF THE SPILL, WHAT CAUSED IT, AND THE CLEANUP MEASURES WILL ALSO BE INCLUDED.

THE SITE SUPERINTENDENT RESPONSIBLE FOR THE DAY-TO-DAY SITE OPERATIONS, WILL BE THE SPILL PREVENTION AND CLEANUP COORDINATOR. HE/SHE WILL DESIGNATE AT LEAST ONE OTHER SITE PERSONNEL WHO WILL RECEIVE SPILL PREVENTION AND CLEANUP TRAINING. THESE INDIVIDUALS WILL EACH BECOME RESPONSIBLE FOR A PARTICULAR PHASE OF PREVENTION AND CLEANUP. THE NAMES OF RESPONSIBLE SPILL PERSONNEL WILL BE POSTED IN THE MATERIAL STORAGE AREA AND IF APPLICABLE, IN THE OFFICE TRAILER ONSITE.

MAINTENANCE/INSPECTION PROCEDURES

EROSION AND SEDIMENT CONTROL INSPECTION AND MAINTENANCE PRACTICES

THE FOLLOWING ARE INSPECTION AND MAINTENANCE PRACTICES THAT WILL BE USED TO MAINTAIN EROSION AND SEDIMENT CONTROLS.

* NO MORE THAN 10 ACRES OF THE SITE WILL BE DENUDED AT ONE TIME WITHOUT WRITTEN PERMISSION FROM THE ENGINEER.
* ALL CONTROL MEASURES WILL BE INSPECTED BY THE SUPERINTENDENT, THE PERSON RESPONSIBLE FOR THE DAY TO DAY SITE OPERATION OR SOMEONE APPOINTED BY THE SUPERINTENDENT, AT LEAST ONCE A WEEK AND FOLLOWING ANY STORM EVENT OF 0.25 INCHES OR GREATER.
* ALL TURBIDITY CONTROL MEASURES WILL BE MAINTAINED IN GOOD WORKING ORDER; IF A REPAIR IS NECESSARY, IT WILL BE INITIATED WITHIN 24 HOURS OF REPORT.
* BUILT UP SEDIMENT WILL BE REMOVED FROM SILT FENCE WHEN IT HAS REACHED ONE-THIRD THE HEIGHT OF THE FENCE.
* SILT FENCE WILL BE INSPECTED FOR DEPTH OF SEDIMENT, TEARS, TO SEE IF THE FABRIC IS SECURELY ATTACHED TO THE FENCE POSTS, AND TO SEE THAT THE FENCE POSTS ARE FIRMLY IN THE GROUND.
* THE SEDIMENT BASINS WILL BE INSPECTED FOR THE DEPTH OF SEDIMENT, AND BUILT UP SEDIMENT WILL BE REMOVED WHEN IT REACHES 10 PERCENT OF THE DESIGN CAPACITY OR AT THE END OF THE JOB, WHICHEVER COMES FIRST.
* DIVERSION DIKES/SWALES WILL BE INSPECTED AND ANY BREACHES PROMPTLY REPAIRED.
* TEMPORARY AND PERMANENT SEEDING AND PLANTING WILL BE INSPECTED FOR BARE SPOTS, WASHOUTS, AND HEALTHY GROWTH.
* A MAINTENANCE INSPECTION REPORT WILL BE MADE AFTER EACH INSPECTION. A COPY OF THE REPORT FORM TO BE COMPLETED BY THE INSPECTOR IS ATTACHED.
  THE REPORTS WILL BE KEPT ON SITE DURING CONSTRUCTION AND AVAILABLE UPON REQUEST TO THE OWNER, ENGINEER OR ANY FEDERAL, STATE OR LOCAL AGENCY APPROVING SEDIMENT AND AND EROSION PLANS, OR STORM WATER MANAGEMENT PLANS.
  THE REPORTS SHALL BE MADE AND RETAINED AS PART OF THE STORM WATER POLLUTION PREVENTION PLAN FOR AT LEAST THREE YEARS FROM THE DATE THAT THE SITE IS FINALLY STABILIZED AND THE NOTICE OF TERMINATION IS SUBMITTED THE REPORTS SHALL IDENTIFY ANY INCIDENTS OF NON-COMPLIANCE.
* THE SITE SUPERINTENDENT WILL SELECT UP TO THREE INDIVIDUALS WHO WILL BE RESPONSIBLE FOR INSPECTIONS, MAINTENANCE AND REPAIR ACTIVITIES, AND FILLING OUT THE INSPECTION AND MAINTENANCE REPORT.
* PERSONNEL SELECTED FOR INSPECTION AND MAINTENANCE RESPONSIBILITIES WILL RECEIVE TRAINING FROM THE SITE. SUPERINTENDENT. THEY WILL BE TRAINED IN ALL THE INSPECTION AND MAINTENANCE PRACTICES NECESSARY FOR KEEPING THE EROSION AND SEDIMENT CONTROLS USED ONSITE IN GOOD WORKING ORDER.

NON-STORM WATER DISCHARGES

IT IS EXPECTED THAT THE FOLLOWING NON-STORM WATER DISCHARGES WILL OCCUR FROM THE SITE DURING THE CONSTRUCTION PERIOD:

* WATER FROM WATER LINE FLUSHING
* PAVEMENT WASH WATERS (WHERE NO SPILLS OR LEAKS OF TOXIC OR HAZARDOUS MATERIALS HAVE OCCURRED).
* UNCONTAMINATED GROUNDWATER (FROM DEWATERING EXCAVATION).

ALL NON-STORM WATER DISCHARGES WILL BE DIRECTED TO THE SEDIMENT BASIN PRIOR TO DISCHARGE.

CONTRACTOR'S CERTIFICATION

I CERTIFY UNDER PENALTY OF LAW THAT I UNDERSTAND THE TERMS AND CONDITIONS OF THE GENERAL NATIONAL POLLUTANT DISCHARGE ELIMINATION SYSTEM (NPDES) PERMIT THAT AUTHORIZES THE STORM WATER DISCHARGES ASSOCIATED WITH INDUSTRIAL ACTIVITY FROM THE CONSTRUCTION SITE IDENTIFIED AS PART OF THIS CERTIFICATION.

RESPONSIBLE FOR/DUTIES	BUSINESS NAME AND ADDRESS OF CONTRACTOR & ALL SUBS	SIGNATURE
GENERAL CONTRACTOR		
SUB-CONTRACTOR		
SUB-CONTRACTOR		
SUB-CONTRACTOR		
SUB-CONTRACTOR		
SUB-CONTRACTOR		

Construction & Engineering Services Consultants, Inc.
9432 Baymeadows Road, Suite 110
Jacksonville, FL 32256
(904) 739-4640 Fax (904) 739-4645
Business Number CA 27598
CONSULTANTS, INC.

APPROVED
2018-EE-291-214
6/14/2018
Jackson McKinney

NO.	BY	DATE	REVISIONS
6			
5			
4			
3			
2			
1			

DESIGN ENGINEER
CLARO N. MAG

① SPEED LIMIT IS 45 MPH THROUGHOUT THE PROJRCT LIMITS.
② WORK ZONE WILL VARY AND WILL MOVE AS WORK PROGRESSES.
③ TTC SHALL BE IN ACCORDANCE WITH FDOT INDEX 600 AND 613.

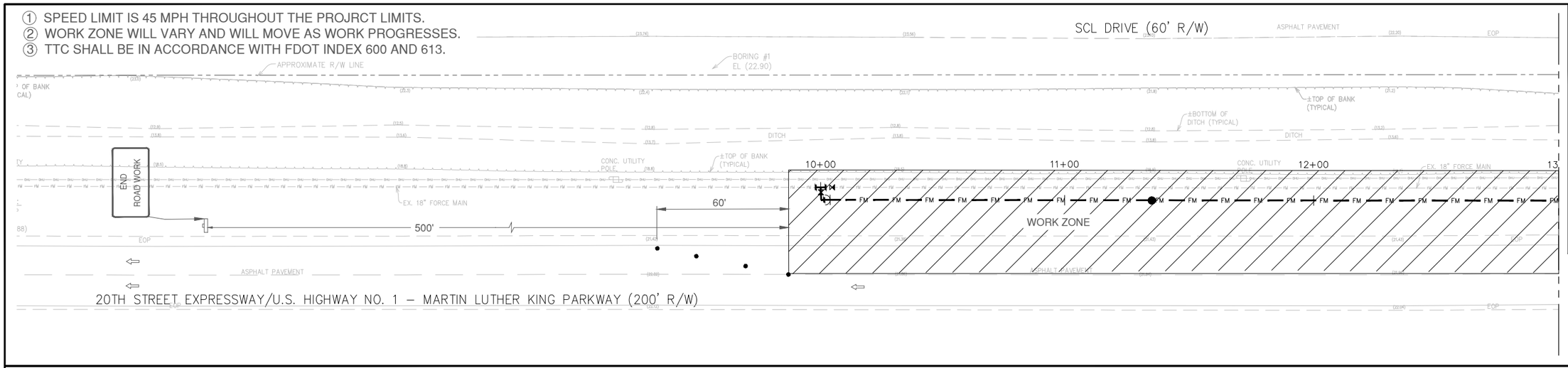

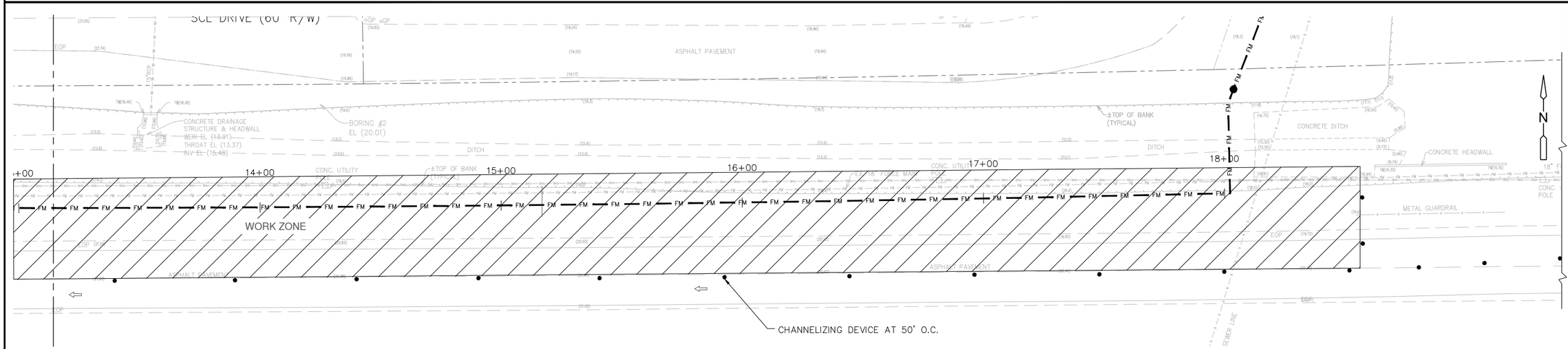

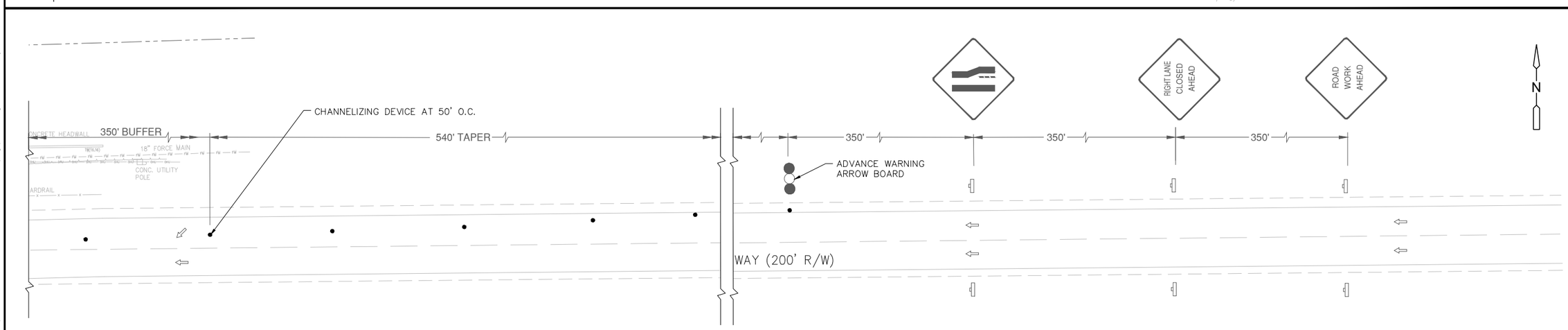

Construction & Engineering Services Consultants, Inc.
9432 Baymeadows Road, Suite 100
Jacksonville, FL 32256
Tel: (904) 645-1966
Business Number CA 27598
C&ES CONSULTANTS, INC.

APPROVED
6/14/2018

NO.	BY	DATE	REVISIONS
6			
5			
4			
3			
2			
1			

DESIGN ENGINEER
CLARO N. MAGPANTAY, P.E.
FLORIDA REGISTRATION NO. 60164

DESIGNER: MAGPANTAY
DRAWN BY: PAGE
DATE: APR. 2018
CHECKED BY: GBAY
DATE: APR. 2018

JEA Building Community

KINLOCK PUMP STATION
FORCE MAIN UPGRADE
TEMPORARY TRAFFIC CONTROL PLAN

PROJ. NO. 17016
DATE: APR. 2018
SCALE: 1" = 20'

NO. SHEETS 13
SHEET NO. 12
DRAWING NO. C-12

Z:\Projects\17016 JEA MCMillan-Kinlock PS Force Mains\dwg\Details.dwg Current Layout Tab = MOT Thu Apr 26, 2018 – 12:00

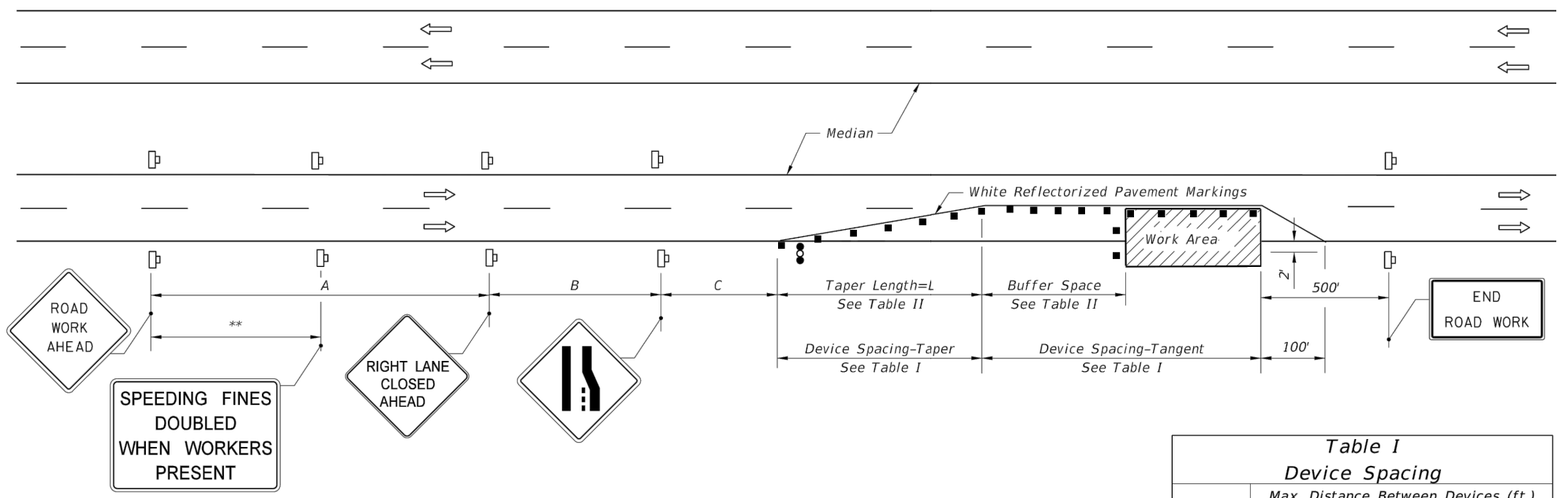

Table II
Buffer Space and Taper Length

Speed (mph)	Buffer Space	Taper Length (12' Lateral Transition)	
	Dist. (ft.)	L (ft.)	Notes (Merge)
25	155	125	$L = \frac{WS^2}{60}$
30	200	180	
35	250	245	
40	305	320	
45	360	540	$L = WS$
50	425	600	
55	495	660	
60	570	720	
65	645	780	
70	730	840	

When Buffer Space cannot be attained due to geometric constraints, the greatest attainable length shall be used, but not less than 200 ft.

For lateral transitions other than 12', use formula for L shown in notes column.
Where:

L = Length of taper in feet
W = Width of lateral transition in feet
S = Posted speed limit (mph)

Table I
Device Spacing

Speed (mph)	Max. Distance Between Devices (ft.)			
	Cones or Tubular Markers		Type I or Type II Barricades or Vertical Panels or Drums	
	Taper	Tangent	Taper	Tangent
25	25	50	25	50
30 to 45	25	50	30	50
50 to 70	25	50	50	100

DISTANCE BETWEEN SIGNS

Speed	Spacing (ft.)		
	A	B	C
40 mph or less	200	200	200
45 mph	350	350	350
50 mph	500	500	500
*55 mph or greater	2640	1640	1000

* The ROAD WORK 1 MILE sign may be used as an alternate to the ROAD WORK AHEAD sign and the RIGHT LANE CLOSED ½ MILE sign may be used as an alternate to the RIGHT LANE CLOSED AHEAD sign.

** 500' beyond the ROAD WORK AHEAD sign or midway between signs whichever is less.

SYMBOLS

- Work Area
- Channelizing Device (See Index No. 600)
- Work Zone Sign
- Advance Warning Arrow Board

GENERAL NOTES

1. Work operations shall be confined to one traffic lane, leaving the adjacent lane open to traffic.
2. On undivided highways the median signs as shown are to be omitted.
3. When work is performed in the median lane on divided highways, the channelizing device plan is inverted and left lane closed and lane ends signs substituted for the right lane closed and lane end signs.

   The same applies to undivided highways with the following exceptions:
   a. Work shall be confined within one median lane.
   b. Additional barricades, cones, or drums shall be placed along the centerline abutting the work area and across the trailing end of the work area.

   When work on undivided highways occurs across the centerline so as to encroach on both median lanes, the inverted plan is applied to the approach of both roadways.
4. Signs and traffic control devices are to be modified in accordance with INTERMITTENT WORK STOPPAGE details (sheet 2 of 2) when no work is being performed and the highway is open to traffic.
5. The two channelizing devices directly in front of the work area may be omitted provided vehicles in the work area have high-intensity rotating, flashing, oscillating, or strobe lights operating.
6. When paved shoulders having a width of 8 ft. or more are closed, channelizing devices shall be used to close the shoulder in advance of the merging taper to direct vehicular traffic to remain within the travel way. See Index No. 612 for shoulder taper formulas.
7. When a side road intersects the highway within the TTC zone, additional TTC devices shall be placed in accordance with other applicable TCZ Indexes.
8. This TCZ plan does not apply when work is being performed in the middle lane(s) of a six or more lane highway. See Index No. 614.
9. For general TCZ requirements and additional information, refer to Index No. 600.

DURATION NOTES

1. Temporary white edgeline may be omitted for work operations less than 3 consecutive calandar days.
2. For work operations up to approximately 15 minutes, signs, channelizing devices, arrow board, and buffer space may be omitted if all of the following conditions are met:
   a. Speed limit is 45 mph or less.
   b. No sight obstructions to vehicles approaching the work area for a distance equal to the buffer space and the taper length combined.
   c. Volume and complexity of the roadway has been considered.
   d. The closed lane is occupied by a class 5 or larger, medium duty truck(s) with a minimum gross weight vehicle rating (GWVR) of 16,001 lb with high-intensity, rotating, flashing, oscillating, or strobe lights mounted above the cab height and operating.
3. For work operations up to 60 minutes, arrow board and buffer space may be omitted if conditions a, b, and c in DURATION NOTE 2 are met, and vehicles in the work area have high-intensity, rotating, flashing, oscillating, or strobe lights operating.

CONDITIONS

WHERE ANY VEHICLE, EQUIPMENT, WORKERS OR THEIR ACTIVITIES ENCROACH ON THE LANE ADJACENT TO EITHER SHOULDER AND THE AREA 2' OUTSIDE THE EDGE OF TRAVEL WAY.

LAST REVISION	REVISION	DESCRIPTION:	FDOT	FY 2017-18 DESIGN STANDARDS	MULTILANE, WORK WITHIN TRAVEL WAY MEDIAN OR OUTSIDE LANE	INDEX NO.	SHEET NO.
01/01/16						613	1 of 2

Z:\Projects\17016 JEA MCMillian-Kinlock PS Force Mains\dwg\MOT Erosion.dwg Current Layout Tab = MOT Fri Apr 27, 2018 - 08:54
10/12/2016 1:10:50 PM

Construction & Engineering Services Consultants, Inc.
9432 Baymeadows Road, Suite 1/0
Jacksonville, FL 32256
Telephone (904) 645-1525
Business Number CA 27598
C&ES CONSULTANTS, INC.

APPROVED
2018-11-291-214
Joshua McKinney
6/14/2018

NO.	BY	DATE	REVISIONS
6.			
5.			
4.			
3.			
2.			
1.			

DESIGN ENGINEER
CLARO N. MAGPANTAY, P.E.
FLORIDA REGISTRATION NO. 60164

DESIGNER: MAGPANTAY
DRAWN BY: PAGE
DATE: APR. 2018
CHECKED BY: GRAY
DATE: APR. 2018

JEA Building Community

KINLOCK PUMP STATION
FORCE MAIN UPGRADE
TEMPORARY TRAFFIC CONTROL - NOTES & DETAILS

PROJ. NO. 17016
DATE: APR. 2018
SCALE: NONE

NO. SHEETS 19
SHEET NO. 13
DRAWING NO. C-13