gai consultants

Cranberry Office
600 Cranberry Woods Drive
Suite 400
Cranberry Township, Pennsylvania 16066

T 724.772.2011
F 724.772.2050

May 13, 2019

Project C181344.01

Mr. Jason Rinehart
JEA
21West Church Street
Jacksonville, Florida 32202-3139

Report on Results from
Preliminary Survey and Investigation for
Park and King 4kV Substation Rebuild Project
Jacksonville, Florida

Dear Mr. Rinehart:

This letter and attachments contain our report on the Preliminary Survey and Investigation (PSI) that was performed for the Park and King 4kV Substation Rebuild Project (Project). This report contains a summary of our findings from the investigation along with a proposed one-line and conceptual layout for the station. An estimate of the construction duration and an engineer's estimate of the probable construction cost are also included with this report.

Background

GAI understands that JEA is requesting a study of the feasibility of replacing the existing unit sub at Park and King Substation with a new 8.6 MVA transformer and switchgear. This switchgear is to include two (2) feeder bays and one (1) transformer secondary bay. To accomplish this study, JEA has requested that a PSI be performed for the project prior to designing the rebuild of the 4kV Park and King substation.

Scope of Services

Based on our understanding of the Project, GAI performed the following tasks to complete the PSI for this station:

1. Manage the project including participating in any project conference calls for the duration of the project.
2. Visit the site with JEA staff to observe and document the detailed project requirements and take field measurements.
3. Review JEA standards, new and existing vendor drawings and existing applicable substation and P&C drawings.
4. Based on the drawing and document review, determine if upgrades to lighting, grounding, spill containment, fencing or other similar items are required.
5. Evaluate the proposed equipment installation relative to constructability/maintainability and with respect to the proper working and electrical clearance requirements. Discuss feeder exit options with JEA Distribution Planning. Based on the results from the evaluation and discussion with Distribution Planning, create conceptual station drawings detailing the locations/layout of:
    a. A new T-1 8.6 MVA 13.2/4.16kV Transformer,
    b. A Power Distribution Center (PDC) consisting of a three-bay position 4.16kV switchgear and relaying,
    c. Incoming and outgoing feeder routing and

© 2019 GAI CONSULTANTS

d. New areas of lighting, as required.

In addition to the plan layout drawings, modify the existing and/or create a new one-line drawing. We will submit a preliminary concept plan for review and discussion upon completion. This submission will be in advance of the report submission.

6. Develop construction sequencing of station modification work detailing:
   a. De-energization of station,
   b. Removal of existing equipment including the 4.687 MVA 13.2/4.16kV transformer,
   c. Access paths for equipment egress/ingress,
   d. Installation of new equipment, and
   e. Reenergization of station.

   Sequencing will be provided in writing supplemented by plan drawing to illustrate placement of major equipment and cables. An estimate of outage time will be included in the sequencing.

7. Create an Engineer's estimate of probable construction costs that includes engineering, major materials, and construction cost. Estimate will also include a contingency to account for the preliminary nature of design.
8. Prepare and submit a Final Report that contains the following information:
   a. Findings from field investigation and review of drawings,
   b. Discussion on proposed layout included constructability and project risk,
   c. Discussion on construction sequencing included estimate outage time required, and
   d. Summary of Engineer's estimate of probable construction cost.

Present findings from preliminary survey and investigation to JEA personnel in Jacksonville.

Site Visit Observations and Discussions

On March 19, 2019, two (2) engineers from GAI Consultants, Inc. (GAI) visited the existing station site along with two (2) JEA representations to take measurements and to observe the existing station site. Photographs of the site visit are contained in Attachment A. The following is a summary of the observations that were made:

1. Park & King substation is situated in a historical area with the Gale House located on Gale Court being of primary significance. However, there is nothing historically significant regarding the substation property itself as seen in Photograph 1.
2. Based on measurements within the existing fence, the Park and King substation is located on a lot that is approximately 24 feet wide by 117 feet six (6) inches long containing an existing 13.2/4kV transformer and 4kV switchgear as seen in Photograph 2.
3. There is no existing lighting or ground grid at the station.
4. Station communication transport is via radio, which will be removed as seen in Photograph 3.
5. Fiber is located one block north of the station and will be used for future communications transport.
6. The existing incoming switch cabinet for the 13kV is located on the south side of the station. It was reported that this location is preferred and therefore, expansion of the station should occur on the Gale Court side with awareness of potential property setbacks.
7. Station Service can be provided by transformers outside the station (Sys 1 and Sys 2).
8. There is room to park vehicles on the alley side of the station in the south opposite to the Gale Court entrance as seen in Photograph 4.

© 2019 GAI CONSULTANTS

9. There is no high side protection or breaker presently.
10. The trees and landscaping from the adjacent properties have overgrown the existing substation fences along the length of both sides of the station.
11. There is no existing spill containment at the station.

In addition to these observations, the following is a summary of the topics that were discussed prior to and during the site visit:

1. There are no outage issues for this station, however, construction should be performed to minimize outage window. An outage timeframe of six (6) months is feasible.
2. A Power Delivery Center (PDC) is required as well as Arc Suppression/Mitigation Switchgear.
3. Install blast walls along long sides of substation. Assume CMU wall with brick veneer for blast walls and assume brick veneer on both sides of wall.
4. The new ground grid to extend three (3) feet outside of any metallic station barrier (fence or gates) while no ground grid extension is required for a wall.
5. Assume that a five (5) foot temporary construction easement will be needed to install the foundations for the blast wall.
6. CI agent to be used as part of oil containment design.
7. Landscaping to be included in the cost for the substation because of clearing to construct the blast walls.
8. Existing station can be razed without the need to maintain customer load during construction.
9. Because of the lack of high side protection or a breaker, fuses for the new transformer is preferred and their installation will require new pad mounted switches with fusing.

Results from Drawings and Standards Review

As part of the PSI, GAI reviewed JEA's standards along with vendor drawings and existing substation and P&C drawings for the station. The following is a list of the conclusions that were drawn based on these reviews:

1. FM Global Property Loss Prevention Data Sheets, FMDS0504, are to be used to determine clearances with respect to the power transformer and PDC.
2. Per FMDS0504, 2.3.1.4.5, oil retention is to be extended eight (8) feet beyond oil containing parts of the transformer.
    a. Site spacing does not allow for the eight (8) feet across the width of the station, so the total required square footage will be provided by increasing the length of spill containment area along the length of the station.
    b. The required volume and depth of the future containment pit will be designed during detailed engineering.
3. The clearance maintained from transformer to the PDC can be reduced to 15 feet as the PDC will need a minimum 2-hour fire rated exterior per FMDS0504, 2.3.1.1.1, Table 5.
4. Lighting, grounding and spill containment need to be added to the site.
5. Walls need to be added that extend one (1) foot vertically and two (2) feet horizontally beyond the components of the newly installed transformer to limit fire exposure per FMDS0504, 2.3.1.3.2 A.

One-Line and Conceptual Layout

A new Park & King layout and one-line diagram have been prepared based on the field observations and discussion and drawing and standards review. These drawings are contained in Attachment B. The following is a summary of the site changes, access and proposed equipment installations that are depicted in the station arrangement drawing:

© 2019 GAI CONSULTANTS

1. Site changes:
    a. A 13-foot-high decorative blast wall is to be installed along both the East and West side of the yard (along the length) with the chain link fencing removed. This blast wall will likely require a special foundation anchorage such as helical piers
    b. The yard has been extended on the North end to the property line adjacent to Gale Court.
    c. Three (3) new areas of lighting have been added.
    d. Spill containment and grounding has been added.
2. Access
    a. South and North ends of the station to be swing gates and will provide access paths for Transformer and PDC equipment egress.
    b. No vehicular traffic available within the walled substation; parking for vehicles is allotted to the South near the alley entrance.
3. New primary switch enclosure installed. The following are some pertinent items relative to the switch enclosure installation:
    a. The replacement pad-mount enclosure is to be installed in the same location to allow vehicular access to the south property and allow termination of existing 13kV Circuits 114 (in and out) and 134 (in only) in their current routing to the south of the property towards Acosta Street.
    b. New pad-mount enclosure will be required for high side fault interrupting for transformer protection (S&C Vista Gear 431 or equivalent).
    c. Maintaining the existing switch was considered, but a Vista Gear is recommended to provide overcurrent protection for the transformer. If the existing switch enclosure is kept, a separate pad-mount or above-grade solution for providing primary over current protection would be needed.
4. New 6.88/8.6 MVA 13.2/4.16kV Transformer installed. The following are some pertinent items relative to the transformer installation:
    a. The transformer is to be oriented so that the cooling fins are toward the West wall with a three (3) feet clear distance provided for maintenance.
    b. Similarly, a 4'-10" clear distance has been provided on the control cabinet side for maintenance.
    c. Refer to earlier section of report regarding oil containment discussion.
5. New Arc suppression PDC installed. The following are some pertinent items relative to the PDC installation:
    a. PDC consolidated and configured with three (3) bays:
        i. T1/Arc Suppression.
        ii. Circuit 7601 (4kV) exiting to the North of the property along Gale Court.
        iii. Circuit 7602 (4kV) exiting to the South of the property along the alley.
    b. PDC to be at a minimum three (3) feet off the West wall to allow clearance on East and West sides for foot traffic. PDC could be shifted closer to west wall removing egress there to provide larger walkway between east wall. If BARD HVAC is installed clearance must be verified.
    c. PDC to be designed with vendor. Provided example by Square D used for design layout.
    d. The enclosure needs modification from example provided in RFP.
        i. Switchgear must have arc flash suppression and not arc flash venting via plenums or exhaust as space is limited on site.
        ii. HVAC placed so as not to conflict with the East, West or North walls.
        iii. East and West walls need to be 100% clear due to space restrictions.
        iv. PDC may increase in size to the South to accommodate equipment needs.

© 2019 GAI CONSULTANTS

Construction Sequencing and Estimated Cost

Park and King is a one-transformer substation and only a single duration outage will be needed for the demolition and construction efforts. Therefore, GAI has prepared a proposed construction schedule with tasks and durations. This schedule is included as Attachment C and consists of the following sequence:

1. Construction Mobilization
2. Station Outage
3. Substation Demolition
4. Perform Below Grade Construction
5. Perform Above Grade Construction
6. Perform Testing
7. Station energization
8. Closeout & Landscaping

As shown, we have estimated a six (6) month construction period.

An Engineer's Estimate of Probable Construction Cost is contained in Attachment D as shown, our total estimated cost is $3,235,000. This estimate contains the construction costs for all work that is to be performed within the substation including major equipment costs. These costs are based on our experience with similar projects and information that was provided to us from JEA

Closing

We appreciate the opportunity to assist JEA on this project. We will contact you in a few days to answer any questions you may have and to set up a meeting to discuss this report in more detail.

Sincerely,

GAI Consultants, Inc.

Robert Steinmetz
Digitally signed by Robert Steinmetz
Reason: I am approving this document
Date: 2019.05.13 12:33:13-05'00'

Robert J. Steinmetz, PE
Senior Technical Manager
Substation Group

Stephen P. Anthony
Digitally signed by Stephen P. Anthony
DN: E=S.Anthony@gaiconsultants.com, CN=Stephen P. Anthony
Reason: I am approving this document
Contact Info: 412-295-5182
Date: 2019.05.13 13:38:25-04'00'

Stephen P. Anthony, PE
Project Manager
Substation and P&C Group Manager

SPA/cmr

Attachments: Attachment A – Site Photographs
Attachment B – One-Line Diagram and Conceptual Layout
Attachment C – Proposed Construction Schedule
Attachment D – Engineer's Estimate of Probable Construction Cost

© 2019 GAI CONSULTANTS

ATTACHMENT A
Site Photographs

© 2019 GAI CONSULTANTS

Photograph 1. View looking at north end of the existing station from Gale Court. Existing switchgear in foreground is to be replaced.

© 2019 GAI CONSULTANTS

Photograph 2. View looking along the east side of the station facing south. Existing switchgear and transformer to be removed and replaced.

© 2019 GAI CONSULTANTS

Photograph 3. View looking at existing radio communication cabinet located at northwest corner of station. Cabinet to be removed.

© 2019 GAI CONSULTANTS

Photograph 4. View looking at south side for the station from alley. Notice existing trees and landscaping encroaching over station.

© 2019 GAI CONSULTANTS

ATTACHMENT B
Park & King Substation General Arrangement & One-Line Diagram

© 2019 GAI CONSULTANTS

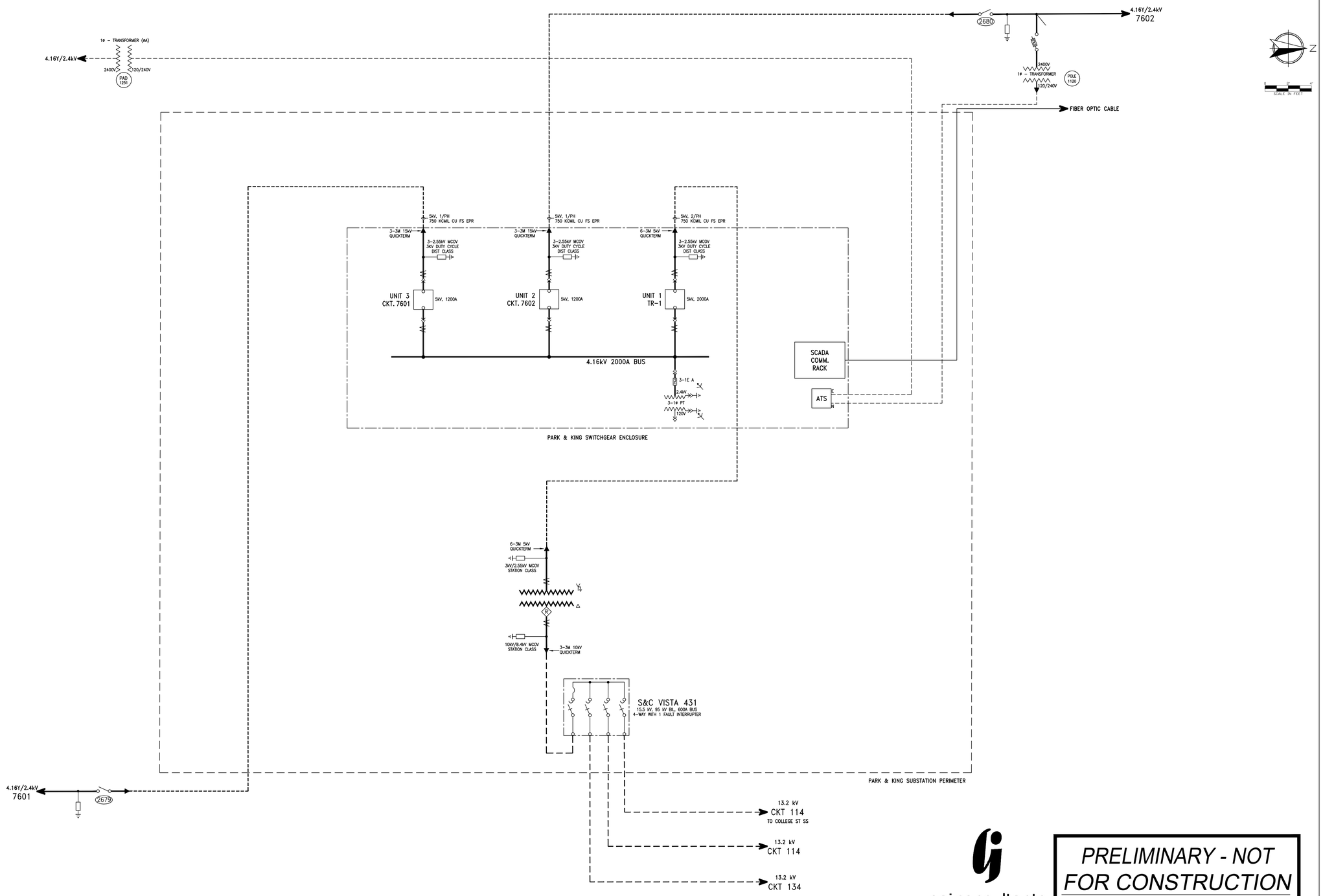

gai consultants

PRELIMINARY - NOT FOR CONSTRUCTION

NO.	REVISION	DATE	CH'D	APP'D		REVISION	DATE	BY	CH'D	APP'D
	ISSUED FOR REVIEW	5/6/19								
	FINAL ISSUE OF CONCEPTUAL DESIGN	5/13/19								

ENGINEERING RECORD		
STATUS	BY	DATE
ASSIGNED		
DESIGNED		
DRAWN		
CHECKED		
APP'D		

JEA BUILDING COMMUNITY

PARK & KING
ONE LINE DIAGRAM
13.2/4KV SUBSTATION REBUILD

SCALE: 3/32" = 1'

PROJECT DESIGN SEGMENT 20410

PROJECT NO. XXXXXXX

DRAWING NO. XXXXXXX

SHEET NO. 1 OF 1

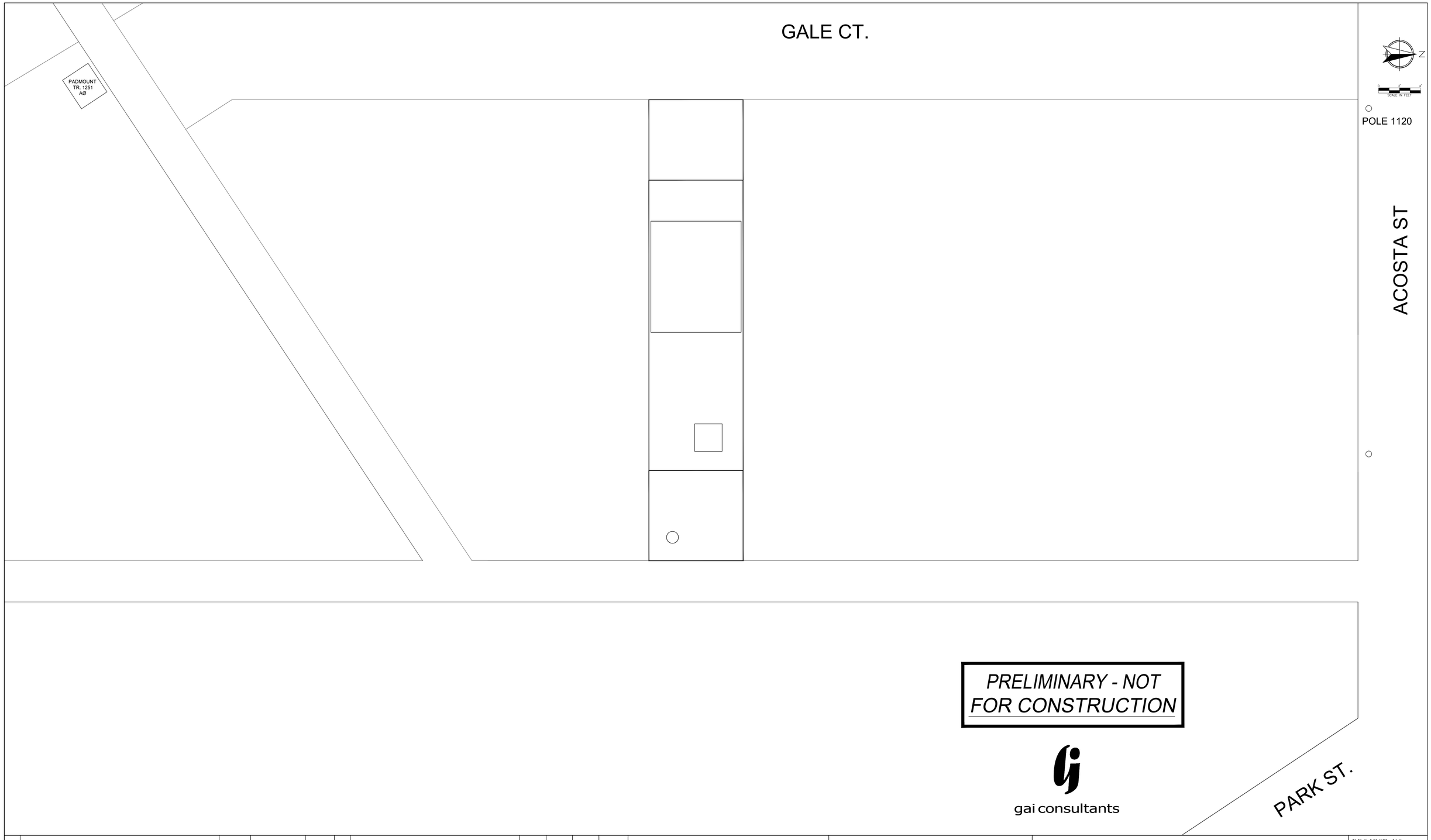

NO.	REVISION	DATE	CH'D	APP'D		REVISION	DATE	BY	CH'D	APP'D
	ISSUED FOR REVIEW	5/6/19								
	FINAL ISSUE OF CONCEPTUAL DESIGN	5/13/19								

ENGINEERING RECORD		
STATUS	BY	DATE
ASSIGNED		
DESIGNED		
DRAWN		
CHECKED		
APP'D		

JEA
BUILDING COMMUNITY

PARK & KING
EXISTING SITE
13.2/4KV SUBSTATION REBUILD

SCALE: 3/32" = 1'

PROJECT DESIGN SEGMENT 20410

PROJECT NO. 800XXXX

DRAWING NO. XXXXXXX

SHEET NO. 1 OF 2

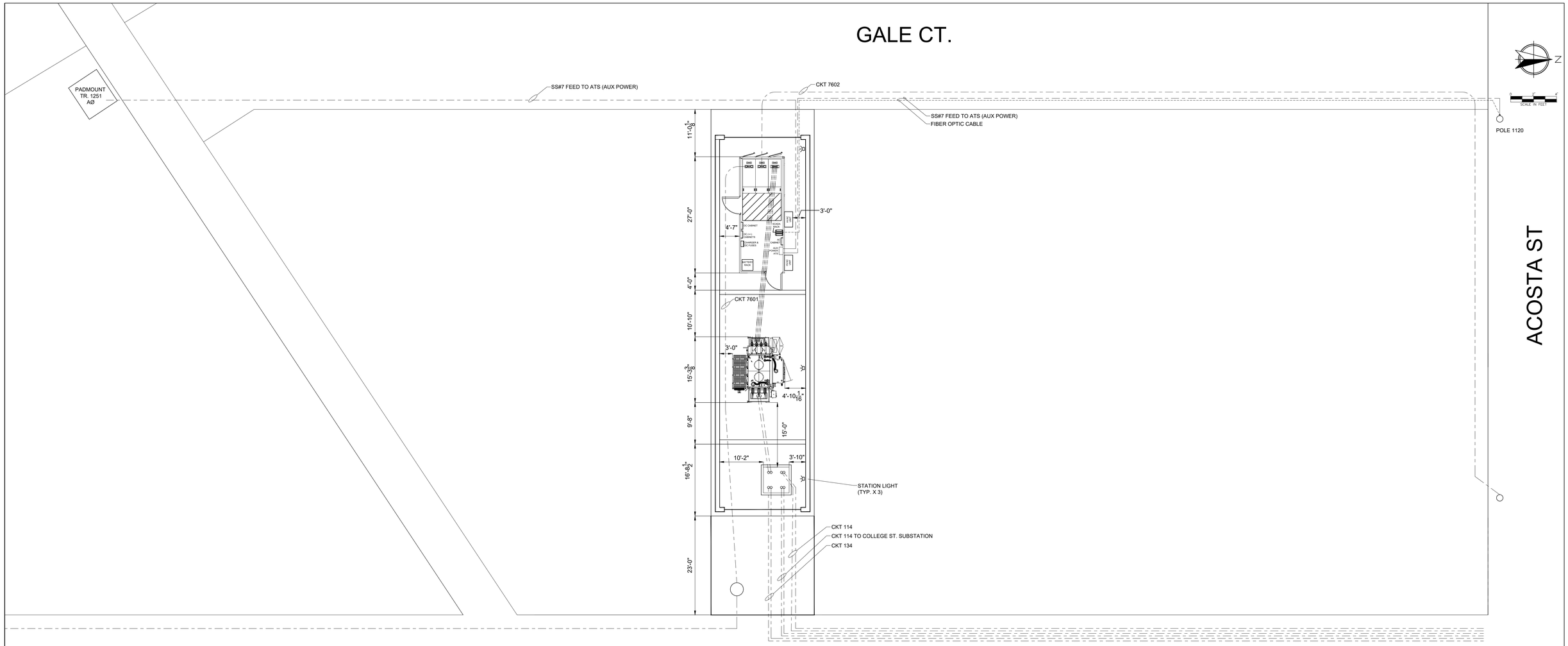

PRELIMINARY - NOT FOR CONSTRUCTION

gai consultants

NO.	REVISION	DATE	CH'D	APP'D		REVISION	DATE	BY	CH'D	APP'D
	ISSUED FOR REVIEW	5/6/19								
	FINAL ISSUE OF CONCEPTUAL DESIGN	5/13/19								

ENGINEERING RECORD		
STATUS	BY	DATE
ASSIGNED		
DESIGNED		
DRAWN		
CHECKED		
APP'D		

JEA BUILDING COMMUNITY

PARK & KING
PRELIMINARY SITE
13.2/4KV SUBSTATION REBUILD

SCALE: 3/32" = 1'

PROJECT DESIGN SEGMENT 20410

PROJECT NO. 800XXXX

DRAWING NO. XXXXXXX

SHEET NO. 2 OF 2

ATTACHMENT C
Park & King Proposed Construction Schedule

© 2019 GAI CONSULTANTS

Proposed Construction Schedule
Park and King 4kV Substation Rebuild Project
Jacksonville, Florida

May 13, 2019

No.	Task	Duration		Start		Finish	
1	**Construction Mobilize**	**1 wk**	**5**	**Week 1**	**10/5/2020**	**Week 1**	**10/9/2020**
2	**Outage**	**6 mos**	**125**	**Week 2**	**10/12/2020**	**Week 27**	**3/12/2021**
3	**Substation Demolition**	**2 wks**	**10**	**Week 2**	**10/12/2020**	**Week 3**	**10/24/2020**
	Above Grade Equipment Removal	1 wk	5	Week 2	10/12/2020	Week 2	10/17/2020
	Below Grade Removal	1 wk	5	Week 3	10/19/2020	Week 3	10/24/2020
4	**Perform Below Grade Construction**	**9 wks**	**45**	**Week 4**	**10/26/2020**	**Week 14**	**12/19/2020**
	Foundations & Wall	5 wks	25	Week 4	10/26/2020	Week 9	11/28/2020
	Grounding	2 wks	10	Week 9	11/30/2020	Week 11	12/12/2020
	Conduits/Cabling	2 wks	10	Week 12	12/14/2020	Week 14	12/19/2020
5	**Perform Above Grade Construction**	**5 wks**	**25**	**Week 15**	**12/28/2020**	**Week 20**	**1/30/2021**
	Transformer Placement	1 wk	5	Week 15	12/28/2020	Week 15	1/2/2021
	PDC Placement	1 wk	5	Week 16	1/4/2021	Week 16	1/9/2021
	Vista Gear Placement	1 wk	5	Week 17	1/11/2021	Week 17	1/16/2021
	Wiring	2 wks	10	Week 18	1/18/2021	Week 20	1/30/2021
6	**Perform Testing**	**2 wks**	**10**	**Week 21**	**2/1/2021**	**Week 22**	**2/13/2021**
	Point-Point verification	1 wk	5	Week 21	2/1/2021	Week 21	2/6/2021
	Equipment testing	1 wks	5	Week 22	2/8/2021	Week 22	2/13/2021
7	**Energize Substation**	**4 wks**	**20**	**Week 23**	**2/15/2021**	**Week 27**	**3/12/2021**
	Establish distribution cut-overs	2 wks	10	Week 23	2/15/2021	Week 25	2/27/2021
	Final check-outs	2 wks	10	Week 26	3/1/2021	Week 27	3/12/2021
8	**Closeout & Landscaping**	**3 wks**	**15**	**Week 28**	**3/14/2021**	**Week 30**	**4/3/2021**

Station to be closed out before September 30, 2021

ATTACHMENT D
Park & King Engineer's Estimate of Probable Cost

© 2019 GAI CONSULTANTS

Engineer's Estimate of
Probable Construction Cost
Park and King 4kV Substation Rebuild Project
Jacksonville, Florida

May 13, 2019

	Description	Quantity	Unit	Unit Price	Extended Price
1	General Conditions	1	LS	$100,000	$100,000.00
2	Existing Equipment Removal	1	LS	$12,000	$12,000.00
3	Clearing	3000	SF	$1	$3,000.00
4	Existing Fence Removal	200	LF	$45	$9,000.00
5	Grading	50	SF	$40	$2,000.00
6	Conduit Installation	1500	LF	$65	$98,000.00
7	New Lighting Installation	3	EA	$2,000	$6,000.00
8	Concrete Foundation Construction	3	EA	$18,000	$54,000.00
9	Ground Grid Installation	2000	SF	$3.5	$7,000.00
10	Blast Wall Installation (Masonry)	220	LF	$1,300	$286,000.00
11	Swing Gate	2	EA	$6,500	$13,000.00
12	Gravel Placement (6" Nom)	50	SF	$40	$2,000.00
13	13.2/4.16 KV TR	1	LS	$366,000	$366,000.00
14	PDC w./ Arc Supression Switchgear	1	LS	$645,000	$645,000.00
15	Pad Mount Switch Enclosure	1	LS	$86,000	$86,000.00
16	Landscaping & Rehabilitation	1	LS	$50,000	$50,000.00
17	Commissioning	1	LS	$32,000	$32,000.00
18	MV Cables and Terminations	700	LF	$300	$210,000.00
19	4kV Secondary Cable Outside of Station	4200	LF	$165	$693,000.00
20	Fiber Underground	250	LF	$60	$15,000.00
21	Oil Containment	700	SF	$10	$7,000.00
22	Fiber Overhead*	300	LF	-	-
23	Real Estate Temporary Construction Easement*			-	-
				Subtotal =	$2,696,000.00
				Approx. 20% Contigency =	$539,200.00
	Total Estimated Cost =				$3,235,200.00
				* Outside of project budget (performed by others)	